TARRANT COUNTY COMMISSIONERS COURT AGENDA

Filed
Tarrant County Clerk
December 3, 2025 05:58 pm
Mary Louise Nicholson
County Clerk
By: Shay Stroik

Commissioners Courtroom
Tarrant County Administration Building
100 East Weatherford Street, 5th Floor
Fort Worth, Texas 76196

Tuesday, December 9, 2025, 10:00 AM

ANY MEMBER OF THE PUBLIC IS WELCOME TO ADDRESS THE COMMISSIONERS COURT AT ITS NEXT POSTED REGULAR MEETING. YOU MAY SUBMIT A PUBLIC PARTICIPATION FORM USING THE LINK ON THE COMMISSIONERS COURT AGENDA WEBPAGE AT WWW.TARRANTCOUNTYTX.GOV OR IN-PERSON USING THE FORMS AVAILABLE INSIDE THE COUNTY ADMINISTRATOR'S OFFICE. PLEASE INDICATE WHETHER YOU ARE ADDRESSING AN ITEM ON THE POSTED REGULAR AGENDA OR WHETHER PROVIDING GENERAL PUBLIC COMMENTS. COMPLETED FORMS MUST BE SUBMITTED TO THE COUNTY ADMINISTRATOR'S OFFICE BY 5:00 PM ON THE DAY BEFORE THE REGULAR POSTED MEETING. REGARDLESS OF THE DESIRED METHOD TO ADDRESS THE COURT, PUBLIC PARTICIPATION FORMS WILL NOT BE ACCEPTED PRIOR TO THE POSTING OF THE AGENDA. IT IS THE INTENT OF THE COMMISSIONERS COURT TO HAVE A QUORUM PRESENT IN THE COMMISSIONERS COURTROOM LOCATED AT 100 EAST WEATHERFORD STREET, 5TH FLOOR, FORT WORTH, TEXAS 76196. SOME MEMBERS OF THE COMMISSIONERS COURT MAY PARTICIPATE IN THE MEETING BY VIDEO-CONFERENCE CALL. A VIDEO AND AUDIO FEED OF ANY COURT MEMBER PARTICIPATING BY VIDEO-CONFERENCE CALL WILL BE BROADCAST LIVE IN THE COMMISSIONERS COURT ROOM, WHICH WILL BE OPEN TO THE PUBLIC DURING THE MEETING. THE TARRANT COUNTY COMMISSIONERS COURT MAY CONVENE INTO EXECUTIVE SESSION, IF NECESSARY, TO CONDUCT A CLOSED MEETING TO DISCUSS ANY ITEM LISTED ON THIS AGENDA IF THE SUBJECT MATTER IS PERMITTED FOR A CLOSED SESSION BY PROVISIONS OF CHAPTER 551 OF THE TEXAS GOVERNMENT CODE.

10:00 AM OPEN MEETING, BRIEFING AGENDA AND PUBLIC HEARINGS IN COMMISSIONERS COURTROOM
10:00 AM CLOSED MEETING UPON COMPLETION OF OPEN MEETING OR 10:00 AM, WHICHEVER IS LATER
THE COMMISSIONERS COURT MEETING SHALL CONTINUE FROM HOUR-TO-HOUR AND DAY-TO-DAY UNTIL OFFICIALLY ADJOURNED.

I. CALL TO ORDER AND ROLL CALL

II. INVOCATION

III. PLEDGES OF ALLEGIANCE TO THE UNITED STATES OF AMERICA

IV. AGENDA ANNOUNCEMENTS

V. COMMISSIONERS COURT ANNOUNCEMENTS

VI. PROCLAMATIONS, RESOLUTIONS AND PRESENTATIONS

1. Proclamation - Recognizing the Carroll ISD Lady Dragons, UIL 6A D2 Volleyball State Champions (Judge O'Hare and Commissioner Krause)

2. Proclamation - Recognizing the Eagle Mountain-Saginaw ISD Lady Knights, UIL 4A D2 Volleyball State Champions (Commissioner Ramirez)

3. Congratulatory Resolution - Ron Lewis, Deputy Director, Tarrant County Juvenile Services (Commissioner Miles)

4. Memorial Resolution - Bishop Kenneth Bernard Spears (Commissioner Miles)

5. Memorial Resolution - Honoring the Life and Legacy of Elzie Odom (Commissioner Simmons)

6. Resolution - Honoring Cresson Volunteer Fire Department Operations Chief Richard Ward for Heroic Actions on September 1, 2025 (Commissioner Simmons)

7. Resolution - 40th Anniversary of Tarrant County 911 (Commissioner Ramirez)

8. Employee Recognition (Judge O'Hare)

VII. CONSENT AGENDA

A. APPROVAL OF THE MINUTES

1. Consideration to Approve the Minutes of November 11, 2025

B. VARIOUS CLAIMS AND ADDENDUM

1. Consideration of Various Claims and Addendum

C. Administrator

1. Consideration of the Issuance of Series 2026 Hospital Revenue Bonds in One or More Series by the Tarrant County Cultural Education Facilities Finance Corporation for Methodist Hospitals of Dallas d/b/a Methodist Health System in an Amount not to Exceed $220,000,000

2. Consideration of Amendment No. 2 to the Participation Agreement for the Town of Trophy Club Tax Increment Financing Zone Number 1

D. Archives

1. Consideration to Accept Monetary Donations from Various Individuals to the Tarrant County Archives

E. Auditor

1. Consideration to Request Written Report of Finances for Fiscal Year 2025 Under Health & Safety Code Section 775.036 from Tarrant County Emergency Services District No. 1

2. Receive and File the Tarrant County Financial Statements for the Twelve Months Ended September 30, 2025

3. Receive and File the Auditor's Report of the Fiscal Year 2025 Chapter 59 Asset Forfeiture Report Prepared by the Constable, Precinct 7

4. Receive and File the Auditor's Report of the Fiscal Year 2025 Chapter 59 Asset Forfeiture Report Prepared by the District Attorney's Office

5. Receive and File the Auditor's Report for the Cash and Other Remittances Control Review of the Community Supervision and Corrections Department

F. Budget and Risk Management

1. Consideration of an Interlocal Agreement between Tarrant County and My Health My Resources of Tarrant County for the Operation of the Mental Health Jail Diversion Center

2. Consideration of Fourth Amendment to the Interlocal Agreement between Tarrant County and Tarrant County Emergency Services District No. 1

3. Consideration of Risk Management Board Minutes and Recommended Claims

4. Consideration of Fiscal Year 2025 and Fiscal Year 2026 Appropriation Adjustments

G. Community Development

1. Request for Public Hearing - Tuesday, January 13, 2026, at 10:00 A.M. - To Consider Amendment No. 1 to the Tarrant County 2025-2029 Consolidated Plan and Program Year 2025 Action Plan

2. RFQ-2025ENG-54-50 Consideration of an Engineering Contract between Tarrant County and MJ Thomas Engineering for the City of River Oaks 51st Year Community Development Block Grant Project

3. Consideration of a Community Development Block Grant Subrecipient Agreement between Tarrant County and SafeHaven of Tarrant County for the Provision of Educational Services to Youth

4. Consideration of Program Year 2025 Emergency Solutions Grant Program Subrecipient Agreements between Tarrant County and Non-Profit Agencies in Tarrant County for Emergency Shelter Operations

5. Consideration of Change Order No. 1 to the Construction Contract between Tarrant County and Leetech Services LLC for the City of Blue Mound, Texas 50th Year Community Development Block Grant Project

6. Consideration of Change Order No. 1 to the Construction Contract between Tarrant County and EGW Services for the City of Kennedale, Texas 50th Year Community Development Block Grant Project

H. County Clerk

1. Receive and File the County Clerk's Monthly Report - October 2025

I. Criminal Courts

1. Consideration of a Contract between Tarrant County and MHMR of Tarrant County for Services Related to the In-Custody Batterers Intervention Program and the Youthful Offenders Diversion Alternative Program

J. District Attorney

1. Consideration of Memorandum of Understanding between Tarrant County, d/b/a Tarrant County Criminal District Attorney’s Office and Tarrant County College District for Use of the Firing Range

2. Receive and File the Tarrant County Adult Sexual Assault Response Team Biennial Report

K. Elections Administration

1. Consideration to Authorize the Elections Administrator to Send Written Notifications of Proposed Voting Precinct Boundary Changes, Approve and Implement Voting Precinct Boundary Changes, and Publish Notice of Voting Precinct Boundary Changes Under Election Code Chapter 42 As Necessary to Comply With Future Court Orders Issued in League of United Latin American Citizens, et al. v. Abbott

L. Facilities Management

1. Consideration of a Property Use Request from Justice of the Peace, Precinct 7 to Use the Subcourthouse at Mansfield to Conduct Weekend Weddings

2. Consideration to Temporarily Change the Lighting of the 1895 Courthouse for Sundance Square's New Year's Eve 2026 Celebration

3. Consideration of a Professional Services Contract with Baird, Hampton and Brown for Engineering Services for the Lighting Upgrade Project at the Correction Center

4. Consideration of Change Order No. 1 to Fast-Trak Construction, Inc. Construction Services Contract for the Precinct 2 Open Garage

5. Consideration of a Parking License Agreement between Tarrant County and Cassata for Parking Spaces Located at 1400 Hemphill Street, Fort Worth, Texas

M. HIV Administration

1. Consideration of Interim Funding for Fiscal Year 2026 Health Resources and Services Administration Ryan White Part C Grant

2. Consideration to Submit the Texas Department of State Health Services Fiscal Year 2026-2027 Ryan White Part B Services Grant Renewal Application

3. Consideration of Amendment No. 2 to the Fiscal Year 2025-2026 Health Resources and Services Administration Ryan White Treatment Extension Act Part A Provider Contract with Harvesting International Ministry Center, Inc.

4. Consideration of Amendment No. 3 to the Fiscal Year 2025-2026 Health Resources and Services Administration Ryan White Treatment Extension Act Part A Subrecipient Contract with The Salvation Army

5. Consideration of Amendment No. 3 to Fiscal Year 2025-2026 Health Resources and Services Administration Ryan White Treatment Extension Act Part A Subrecipient Contract with Tarrant County Public Health – Preventive Medicine Clinic

6. Consideration of Amendment No. 3 to the Fiscal Year 2025-2026 Health Resources and Services Administration Ryan White Treatment Extension Act Part A Subrecipient Contract with AIDS Healthcare Foundation

7. Consideration of Amendment No. 3 to the Fiscal Year 2025-2026 Health Resources and Services Administration Ryan White Treatment Extension Act Part A Subrecipient Contract with Tarrant County Hospital District

N. Human Resources

1. Consideration of Professional Services Agreements with ABBA Staffing Consulting and Ad-A-Staff for Typing Test Services

2. Consideration of Administrative Agreements and Implementation Documents between Tarrant County and The Standard Insurance Company for Voluntary Benefits Effective January 1, 2026

3. Consideration to Authorize the Reassignment of Certain Chapter 54 Magistrate(s) to Chapter 54A Criminal Associate Judge(s)

4. Consideration of a Master Worksite Training Employer Agreement with Workforce Solutions for Tarrant County to Support Intern Onboarding Through the Work Experience Program

5. Receive and File the Personnel Agenda

O. Information Technology

1. Consideration of an Agreement between Tarrant County and Tyler Technologies to Implement a Secure Positive Pay Process in the Jury Manager System

P. Public Health

1. Consideration of a Provider Services Agreement with Molina HealthCare of Texas, Inc. for Reimbursement of Eligible Clinical Health Care Services Provided by Tarrant County Public Health

2. Consideration of a Participating Provider Agreement with Superior HealthPlan, Inc., and its Affiliates, for Reimbursement of Eligible Clinical Health Care Services Provided by Tarrant County Public Health

3. Consideration of a Participating Provider Agreement with Oscar Insurance Company and its Affiliates and Third-Party Administrator for Reimbursement of Eligible Clinical Health Care Services Provided by Tarrant County Public Health

4. Consideration of a Service Provider Agreement between Tarrant County and Dr. Daniel E. Rousch, DO, to Provide Psychiatric Services

Q. Purchasing

1. RFO No. F2026036 - Purchase of Palo Alto Premium Support Renewals- #DIR-CPO-4846 - Information Technology - Kudelski Security, Inc.

a) Award Recommendation

2. Approval of Exemption from Competitive Bidding Requirements - Purchase of Reagents, Controls, Equipment Parts, and Proficiency Testing Materials - Public Health - Various Vendors

a) Approval of Exemption from Competitive Bidding

3. RFP No. F2023193 - Annual Contract for Inmate Commissary, Banking, and Deposit/Release Services - Sheriff's Office - Keefe Commissary Network LLC - Exercise Second Option for Renewal - Same Contract Terms

a) Contract Renewal

4. RFP No. F2024017 - Annual Contract for Defendant-Paid Substance Abuse Outpatient Treatment Services - Community Supervision and Corrections Department - Various Vendors - Exercise Second and Final Renewal Option for Renewal - Same Contract Terms

a) Contract Renewal

5. RFP No. F2024023 - Annual Contract for Disaster Debris Removal, Reduction, Disposal, and Other Emergency Related Services - Emergency Management - Various Vendors - Exercise Second and Final Option for Renewal - Same Contract Terms

a) Contract Renewal

6. RFP No. F2024026 - Annual Contract for Marketing Services - Countywide - Various Vendors - Exercise Second and Final Option for Renewal - Same Contract Terms

a) Contract Renewal

7. RFQ No. F2024091 - Annual Contract for Tissue Bank Services - Medical Examiner's Office - Various Vendors - Exercise First Option for Renewal - Same Contract Terms

a) Contract Renewal

8. Bid No. F2024111 - Annual Contract for Aftermarket Automotive Parts - Countywide - Various Vendors - Exercise Second and Final Option for Renewal - Same Firm Fixed Prices and Discount from List Price

a) Contract Renewal

9. Bid No. F2024116 - Annual Contract for OEM Service and Parts - Countywide - Various Vendors - Exercise Second and Final Option for Renewal - Same Firm Fixed Prices and Hourly Rates

a) Contract Renewal

10. Bid No. F2024117 - Annual Contract for Emergency Equipment - Countywide - Various Vendors - Exercise Second and Final Option for Renewal - Same Firm Fixed Prices and Discount from List Price

a) Contract Renewal

11. RFP No. F2024134 - Annual Contract for Facilities Construction Projects Management Software - Facilities Management - Systemates, Inc. - Exercise First Option for Renewal - Same Contract Terms

a) Contract Renewal

12. RFP No. F2025013 - Annual Contract for Drug and Alcohol Laboratory Testing Services - Community Supervision and Corrections Department - Various Vendors - Exercise First Option for Renewal - Same Contract Terms

a) Contract Renewal

13. Bid No. F2025028 - Annual Contract for Pre-Sort Bulk Mail Services - Countywide - TC Delivers, LLC - Exercise First Option for Renewal - Same Per Discount from Postage Rate

a) Contract Renewal

14. Bid No. F2025029 - Annual Contract for Copy Paper - Countywide - Various Vendors - Exercise First and Final Option for Renewal - Same Firm Fixed Prices

a) Contract Renewal

15. Bid No. F2025042 - Annual Contract for Bobtail Truck Rentals - Elections Administration - Enterprise Holdings - Exercise First Option for Renewal - Same Firm Fixed Prices

a) Contract Renewal

16. Bid No. F2025043 - Annual Contract for Short-Term Rentals of Cars, Trucks, and Vans - Elections Administration - Various Vendors - Exercise First Option for Renewal - Same Firm Fixed Prices

a) Contract Renewal

17. Bid No. F2025062 - Annual Contract for Biomedical and Hazardous Waste Pickup and Disposal - Countywide - Various Vendors - Exercise First Option for Renewal - Same Firm Fixed Prices

a) Contract Renewal

18. Bid No. F2025076 - Annual Contract for Installation and Removal of Guard Fence - All Precincts - Vann/Elli, Inc. - Exercise First Option for Renewal - Same Firm Fixed Prices

a) Contract Renewal

19. Bid No. F2025077 - Annual Contract for Preventative Maintenance and Cleaning of Commercial Kitchen Vent Hoods and Ceiling Registers, and Deep Cleaning Services - Facilities Management - Various Vendors - Exercise First Option for Renewal - Same Firm Fixed Prices

a) Contract Renewal

20. Bid No. F2025015 - Annual Contract for Various Concrete Services - Countywide - Reliable Paving, Inc.

a) Acceptance of Payment Bond

21. Bid No. F2025184 - Annual Contract for Mechanical and Plumbing Services - Facilities Management - Enviromatic Systems of Fort Worth, Inc.

a) Acceptance of Payment Bond

22. Bid No. F2025099 - Annual Contract for Carpet, Tile and Miscellaneous Flooring Materials and Services - Facilities Management - DMCA, Inc.

a) Acceptance of Payment Bond

b) Acceptance of Performance Bond

23. Euna Solutions, Inc. – Euna Procurement Powered by IonWave - Purchasing

a) Sole Source Designation

b) Contract Approval

24. Nova Biomedical - Maintenance for NOVA Electrolyte Instrument - Medical Examiner's Office

a) Sole Source Designation

b) Contract Approval

25. Groupware Technologies, LLC - HIV-AIDS Client Eligibility and Management System - HIV Administrative Agency

a) Sole Source Renewal

26. Consideration of Contract - RFP No. F2025162 - Annual Contract for Liquid Chromatography-Mass Spectrometry Instrument and Maintenance - Medical Examiner's Office - Thermo Electron North America, LLC - Per Contract Terms

a) Contract Approval

27. Consideration of Cooperative with Texas Smart Buy for Vehicle Rental Services - Texas Smart Buy Contract #975-C1 - Countywide - Enterprise Holdings, Inc.

28. Consideration of Interlocal Agreement between Tarrant County and White Settlement Independent School District for Cooperative Purchasing of Goods and Services

a) Contract Approval

R. Resource Connection

1. Consideration of Amendment No. 1 to the Lease Agreement between Tarrant County and Texas A&M AgriLife Services for Space Located at the Resource Connection

S. Sheriff

1. Consideration of Fiscal Year 2026 Agency Interlocal Assistance Agreement with the City of Bedford for Participation in the Tarrant Regional Auto Crimes Task Force

2. Consideration of a Subscription Services Agreement with LeadsOnline, LLC for Access to and Usage of the LeadsOnline PowerPlus Investigations System

T. Tax Assessor-Collector

1. Consideration of Tax Office Deputizations

U. Transportation

1. Consideration to Enter into an Advanced Funding Agreement with the Texas Department of Transportation for the Reconstruction of US 81 County Line to Avondale Haslet

2. Consider Release of the Construction Bond for the Construction Phase and Acceptance of the Maintenance Bond for the Maintenance Phase of the Wyldewood Subdivision - Precinct 2

3. Consideration of Quitclaim Deeds Conveying Any Interest Tarrant County May Own in Right-of-Way for a Roadway Known as Old Handley Ederville Road

4. Consideration of a Donation Agreement between Tarrant County and Sandstrom Business Park, LTD. to Fund Improvements to Grants Lane - Precinct 4

5. Consideration of an Interlocal Agreement with the City of Hurst for the Striping of Northeast Mall Boulevard and West Cheryl Avenue - Precinct 3

6. Consideration of an Interlocal Agreement with the City of Fort Worth for the Aledo Road Project - Precinct 4

7. Consideration of an Interlocal Agreement between Tarrant County and the City of Forest Hill Related to the Cooperative Funding of the Wichita Street Widening Project - 2021 Transportation Bond Program

8. Consideration of Amendment No. 1 to the Interlocal Agreement with the City of Colleyville Related to the John McCain Road Bridge Widening and Curvature Improvements Project - 2006 Transportation Bond Program

9. Consideration to Rescind Court Order No. 145789 and Reconsideration of Final Plat - Park Drive Subdivision - Precinct 4

10. Consideration of Final Plat with Variance - Harmon Road Addition - Precinct 4

11. Receive and File Final Plat - J & R Addition - Precinct 2

V. Commissioner Precinct 1

1. Consideration of a Grant Agreement between Tarrant County and The National Coalition of 100 Black Women, Inc. Fort Worth Metropolitan Chapter to Provide Support Services to Tarrant County Residents

2. Consideration of Amendment No. 1 to Community Grant Agreement between Tarrant County and Crowley ISD to Provide Support Services to Tarrant County Residents

W. Commissioner Precinct 3

1. Consideration of Agreements with Various Organizations for the Provision of Transportation Services to the Residents of Tarrant County, Precinct 3

X. Commissioner Precinct 4

1. Consideration of a Request to Hold the 2026 Tarrant County Junior Livestock Show at the Will Rogers Memorial Center and Finding of a Direct Public Purpose

VIII. PUBLIC HEARINGS

1. Public Hearing - To Consider Authorizing a Stop Sign on Mustang Wells Drive at the Intersection with Ben Day Murrin Road - Precinct 2

a) Conduct Public Hearing

b) Action, If Necessary

2. Public Hearing - To Consider Establishing a Speed Limit of 35 MPH on Eagle Mountain Circle - Precinct 4

a) Conduct Public Hearing

b) Action, If Necessary

IX. REPORTS AND BUSINESS

A. Administrator

1. Consideration of a Resolution to Nominate an Individual to the Tarrant Appraisal District Board of Advisors

2. Consideration of Out-of-State Travel Requests

3. Consideration of an Exception to the Travel Policy

4. Consideration of Initial Guaranteed Maximum Price Amendment No. 2 between Tarrant County Hospital District, d/b/a JPS Health Network and J.E. Dunn Construction for Services Related to the Central Utility Plant Project

5. Consideration of the Initial Guaranteed Maximum Price Amendment No. 2 between Tarrant County Hospital District, d/b/a JPS Health Network and J.E. Dunn-Source, A Joint Venture, for Services Related to the Medical Outpatient Building Project

6. Consideration of the Third Amendment to a Lease Agreement between Tarrant County Hospital District, d/b/a JPS Health Network and Oral and Maxillofacial Network, PLLC for Clinic Space Located at 1625 St. Louis Street, Fort Worth, Texas

B. Elections Administration

1. Consideration to Approve an Order Calling a Special Runoff Election on January 31, 2026

2. Consideration to Approve Proposed Election Day Polling Locations for the January 31, 2026 Special Runoff Election for Senate District 9

3. Consideration to Approve Proposed Early Voting Dates, Times and Polling Locations for the January 31, 2026 Congressional District 9 Runoff Election

C. Facilities Management

1. Consideration of a Building Renovation of the Records Room of 350 W Belknap Building for the City of Fort Worth Video Magistrate Court

D. Human Resources

1. Consideration of Options Regarding the Tarrant County 457(b) Deferred Compensation Plan Agreement with Lincoln Financial Group

E. Purchasing

1. RFP No. F2025179 - Annual Contract for Audio Transcription Services - Sheriff's Office - Athreon Corporation - Per Contract Terms

a) Award Recommendation

b) Contract Approval

2. Bid No. F2026010 - Annual Contract for Preventative Maintenance and Repair of Air Compressors - Facilities Management - TDIndustries, Inc. - Per Unit Price, Hourly Rates, and Markup for Parts

a) Award Recommendation

3. Bid No. F2026012 - Annual Contract for Grease, Lint, Oil, and Sand Trap Cleaning Services - Facilities Management - EnviroServe, Inc. - Per Unit Price and Hourly Rates

a) Award Recommendation

4. Bid No. F2026013 - Annual Contract for Quickbase Enterprise Platform Subscription - Public Health - Quickbase, Inc.

a) Award Recommendation

5. Bid No. F2026015 - Annual Contract for Window Washing Services - Facilities Management - Various Vendors - Per Unit Price

a) Award Recommendation

6. Bid No. F2026020 - Purchase of Veeam Subscription Licenses - Information Technology - Asimer Tech, LLC

a) Award Recommendation

7. Bid No. F2026021 - Annual Contract for Specialized Electrical Services - Facilities Management - Various Vendors - Per Hourly Rates

a) Award Recommendation

8. Bid No. F2026022 - Annual Contract for Preventative Maintenance and Repair of Conveyor System - Facilities Management - Various Vendors - Per Unit Price, Hourly Rates, and Markup for Parts

a) Award Recommendation

9. Rescind Court Order #146190 - RFP No. F2025098 - Annual Contract for Grants Management Software and Maintenance - Countywide - StreamLink Software, Inc. d/b/a AmpliFund - Per Contract Terms

a) Rescind Court Order #146190 and Award Recommendation

b) Contract Approval

10. RFP No. F2025156 - Annual Contract for AI Development Services - Information Technology

a) Reject All Proposals

b) Rebid with Revised Specifications

11. Permission to Take Bids/RFPs

X. APPOINTMENTS TO VARIOUS BOARDS

1. Action Concerning Appointments to Various Boards, Commissions, Committees, or Tax Increment Finance District Boards

XI. BRIEFING

XII. PUBLIC COMMENTS

XIII. ANNOUNCEMENTS AND COMMENTS

XIV. CLOSED MEETING

A. Pending or Contemplated Litigation

1. Shavon Tamez - CLAIM

2. Laureano Tamez - CLAIM

3. Zomnir v. Arroyo, Case No. 4:25-cv-172

4. Johnson v. Tarrant County, No. 25-10540

B. Advice of Counsel

C. Real Estate Matters

D. Contract Deliberations

E. Personnel Matters

1. Position No. 20000280

F. Security and Cybersecurity Related Issues

G. Economic Development Prospects

Closed Meeting upon completion of Open Meeting or at 10:00 a.m., whichever is later:
(A) to discuss advice about pending or contemplated litigation, a settlement offer, or on a matter in which the duty of the attorney to the County under the Texas Disciplinary Rules of Professional Conduct of the State Bar of Texas conflict with the Texas Open Meeting Act, pursuant to Section 551.071, Texas Government Code;
(B) to deliberate the purchase, exchange, lease, or value of real property, pursuant to Section 551.072, Texas Government Code;
(C) to deliberate the appointment, employment, evaluation, reassignment, duties, discipline, or dismissal of a public officer or employee, or to hear complaint or charge against an officer or employee pursuant to Section 551.074, Texas Government Code;
(D) to deliberate the deployment, or specific occasions for implementation, of security personnel or devices, or a security audit, pursuant to Section 551.076, Texas Government Code; and
(E) to deliberate a cybersecurity measure, policy or contract solely intended to protect a critical infrastructure facility pursuant to Section 551.0761, Texas Government Code;
(F) to deliberate the business and financial issues related to a contract being negotiated, pursuant to Section 551.0725, Texas Government Code.

(G) to deliberate regarding commercial or financial information that the County has received from a business prospect that the County seeks to have locate, stay, or expand near the County and with which the County is conducting economic development negotiations, or to deliberate the offer of a financial or other incentive to a business prospect, pursuant to Section 551.087(1), Texas Government Code.

XV. COMMISSIONERS COURT RECONVENED

XVI. ADJOURNMENT

Filed
Tarrant County Clerk
December 3, 2025 05:58 pm
Mary Louise Nicholson
County Clerk
By: Shay Stroik

Date Posted: December 3, 2025 05:58 pm

TARRANT COUNTY
COMMISSIONERS COURT COMMUNICATION

Court Date: December 9, 2025	**Court Order #:**	**Page:** 1 of 1
Department: County Judge	**Prepared By:** Kim Ford	**Approved By:** Kim Ford

SUBJECT:

Proclamation - Recognizing the Carroll ISD Lady Dragons, UIL 6A D2 Volleyball State Champions (Judge O'Hare and Commissioner Krause)

See Attachment for Additional Information

Attachments

Proclamation Lady Dragons - Carroll ISD Volleyball.pdf

PROCLAMATION
RECOGNIZING THE CARROLL LADY DRAGONS, UIL 6A D2 STATE VOLLEYBALL CHAMPIONS

WHEREAS, the Carroll Lady Dragons Volleyball Team has demonstrated exemplary teamwork, skill, athleticism, and dedication during their 2025 Championship run; and

WHEREAS, until this year, the Lady Dragons had not played in a State Championship match since 1997; and

WHEREAS, despite trailing Austin High 2-1 in the state final, the Lady Dragons came back to win the State Championship 3-2; and

WHEREAS, years of hard work, training, and diligence have delivered a historic victory for the Lady Dragons, winning the first ever State Championship for the Carroll Volleyball Program; and

WHEREAS, the Lady Dragons Volleyball Team was led by Head Coach Leslie Jackson, and Assistant Coaches Rosana Barbosa, Madison Gregory, and Allison Loftin, and supported by Superintendent Dr. Jeremy Glenn, Athletic Director Riley Dodge, School Board President Cameron Bryan, and the Trustees; and

WHEREAS, the Lady Dragons Volleyball Team has brought great pride to Carroll ISD, the City of Southlake, and Tarrant County, and we celebrate this extraordinary athletic achievement; and

NOW, THEREFORE, BE IT RESOLVED, that we, the Tarrant County Commissioners Court, do hereby recognize the State Champion Carroll Lady Dragons Volleyball Team; and

FURTHER, we encourage the citizens of Tarrant County to acknowledge and congratulate the Lady Dragons on their UIL 6A D2 State Championship.

IN WITNESS WHEREOF, we have hereunder set our hands and caused the Seal of Tarrant County to be affixed this 9th day of December 2025.

TARRANT COUNTY
COMMISSIONERS COURT COMMUNICATION

Court Date: December 9, 2025	**Court Order #:**	**Page:** 1 of 1
Department:	**Prepared By:** Emily Randolph	**Approved By:** Manny Ramirez

SUBJECT:

Proclamation - Recognizing the Eagle Mountain-Saginaw ISD Lady Knights, UIL 4A D2 Volleyball State Champions (Commissioner Ramirez)

See Attachment for Additional Information

Attachments

PROC - EM HS Girls Volleyball State Title 2025.pdf

PROCLAMATION

Eagle Mountain – Saginaw ISD Lady Knights
UIL 4A D2 Volleyball State Champions

WHEREAS, on November 21, 2025, the Eagle Mountain High School Lady Knights Volleyball Team, through diligence and perseverance, and with a season record of 38 wins and only 11 losses, defeated the defending champion Wimberley by a score of 3-1, thereby becoming the Class 4A Division II State Champions for the first time in the history of the school and the school district; and,

WHEREAS, these exemplary young women—Lily Adams, Molly Aubert, Sophie Burdock, Cambri Chukes, Lily George, Venissia Gonzalez, Madie Haney, Brooke Lacewell, Isabel Little, Abigail Moore, Lexi Nichols, Londyn Roberts, Rylinn Roberts, Avery Williams, Keoni Williams, and Keylee Williams—represented themselves, their families, their school, and Tarrant County with honor, dignity, and an unwavering commitment to excellence; and,

WHEREAS, this team distinguished itself within District 7-4A through numerous accolades, including: fourteen members named to the Academic All-District Team; three members named to the District First Team; three members to the District Second Team; and three members named to the District Honorable Mention Team. Furthermore, Sophie Burdock was designated Server of the Year; Molly Aubert was designated Setter of the Year; and Brooke Lacewell and Keoni Williams were jointly designated District Co-MVP; and,

WHEREAS, members of this team also garnered State 4A Division II honors, including: Molly Aubert, Keoni Williams, Brooke Lacewell, and Madie Haney named to the 4A Division II State All-Tournament Team, with Molly Aubert further recognized as MVP of the All-Tournament Team and the Nike 4A-Division II MVP; Brooke Lacewell named to the THSCA Academic All-State Team; Sophie Burdock, Lexi Nichols, and Rylinn Roberts named to the THSCA Academic All-State Honorable Mention Team; and Keoni Williams named the UA Next All-American; and,

WHEREAS, Head Coach Catherine Forester, along with Assistant Coaches Hannah Seguin, Erinn Jayjohn, Michelle Cook, and Alisandra Montemayor, who provided steadfast support and guidance throughout the season, were collectively honored as the District 7-4A Coaching Staff of the Year.

NOW, THEREFORE, **BE IT RESOLVED,** that we, the Commissioners Court of Tarrant County do hereby issue this Proclamation to the Eagle Mountain High School Lady Knights Volleyball Team and their coaching staff in recognition of their extraordinary achievements, and we extend our congratulations.

IN WITNESS WHEREOF, we have hereunto set my hand and caused the Great Seal of Tarrant County to be affixed this 9th day of December 2025.

TARRANT COUNTY
COMMISSIONERS COURT COMMUNICATION

Court Date: December 9, 2025	**Court Order #:**	**Page:** 1 of 1
Department: Commissioner, Precinct 1	**Prepared By:** Leon Polk	**Approved By:** Leon Polk

SUBJECT:

Congratulatory Resolution - Ron Lewis, Deputy Director, Tarrant County Juvenile Services (Commissioner Miles)

See Attachment for Additional Information

Attachments

Ron Lewis.pdf

Congratulatory Resolution
Ron Lewis, Deputy Director
Tarrant County Juvenile Services

WHEREAS, *Ron Lewis was born in Texarkana, Texas, graduated from Copperas Cove High School in 1984, and earned a bachelor's degree in criminal justice in 1989 from Texas Christian University; and*

WHEREAS, *Ron Lewis' career in juvenile justice began at the Fort Worth State School where he supervised group homes serving justice-involved youth with intellectual and developmental disabilities; and*

WHEREAS, *Ron Lewis joined Tarrant County Juvenile Services as a Detention Officer, promoted to Shift Supervisor in 1995, and in 2007 was promoted to Deputy Assistant Director of Institutional Services, providing oversight of the Detention Center's Pre- and Post-Adjudication programs; and*

WHEREAS, *Ron Lewis was promoted to Deputy Director in 2017, assumed responsibility for the overall operations of the department, and has now served in the juvenile justice profession for 36 years; and*

WHEREAS*, Ron Lewis has had the distinct honor of representing the North Texas Chiefs Association on the Texas Juvenile Justice Department Advisory Council, where he contributed to the rewrite of the Texas Administrative Code for Pre- and Post-Adjudication correctional standards, and for this work, the advisory council was formally recognized by the Texas Juvenile Justice Department Board of Directors for its leadership and statewide impact; and*

WHEREAS, *Ron Lewis has served on the Tarrant County Human Trafficking Advisory Committee, helping to establish the Care Coordination Team and implement protocols to respond effectively to victims of human trafficking, and currently serves on the Board of Directors for Gill Children's Services, and the TCU National Alumni Board; and*

WHEREAS, *one of Ron Lewis' most valued accomplishments has been to foster an organizational culture rooted in collaboration across divisions, aligned with a mission of transforming youth, reducing juvenile delinquency, and strengthening community safety; and*

WHEREAS, *Ron Lewis has provided invaluable leadership and guidance on many significant projects and challenges Tarrant County has faced and will forever be regarded as a respected member of our community whose impact will remain as a central element of the continued success of the Tarrant County community; and*

WHEREAS, *Ron Lewis has been married to his wife, Kim for 36 years, are the proud parents of twin daughters, Jessica and LaTasha, and are blessed with three grandchildren, Stasha, Brooklynn, and Brailynn.*

NOW, THEREFORE BE IT RESOLVED, *that we, the Commissioners Court of Tarrant County, do hereby recognize and congratulate Ron Lewis for 34 years of dedicated service to Tarrant County Juvenile Services and for the numerous contributions he has made to the citizens of Tarrant County.*

IN WITNESS WHEREOF*, we have hereunto set our hands and caused the Seal of Tarrant County to be affixed this 9th day of December 2025.*

(Over Entire Court signatures)

TARRANT COUNTY
COMMISSIONERS COURT COMMUNICATION

Court Date: December 9, 2025	**Court Order #:**	**Page:** 1 of 1
Department: Commissioner, Precinct 1	**Prepared By:** Leon Polk	**Approved By:** Leon Polk

SUBJECT:

Memorial Resolution - Bishop Kenneth Bernard Spears (Commissioner Miles)

See Attachment for Additional Information

Attachments

Bishop Kenneth B. Spears.pdf

Memorial Resolution
Bishop Kenneth Bernard Spears
First Saint John Cathedral

WHEREAS, *the family and friends of Bishop Kenneth Bernard Spears were deeply saddened by his death on Monday, November 17, 2025; and*

WHEREAS, *the passing of Bishop Spears took from our community an outstanding spiritual leader, servant, mentor, father, and friend; and*

WHEREAS*, Bishop Spears, a native of Fort Worth, has served as Pastor of the First Saint John Missionary Baptist Church since 1995 and by the guiding of the Holy Spirit, has helped transition the 110-year-old church into the 21st century; and*

WHEREAS, *Bishop Spears attended Bishop College in Dallas, Texas, earned a bachelor's degree at United Theological Seminary in Texarkana, Texas, a master's degree from Survine Theological College in Denver, Colorado, and an Honorary Doctor of Humanities Degree from Louisiana Baptist University in Shreveport, Louisiana; and*

WHEREAS, *Bishop Spears answered his call to ministry in 1981 at the age of 17 while a student in the Fort Worth Independent School District: and*

WHEREAS, *Bishop Spears leadership and vision was evident not only through his ministry but through his commitment to the community; and*

WHEREAS, *Bishop Spears was the founder and CEO of My Community First Community Development Corporation, Chairman of the Black Voters Impact Committee, served on the McDonald Southeast YMCA Board of Managers, Fort Worth ISD Adopt-a-School Program, JPS Health Network Advisory Board, 60 & Better, Baptist Minister's Union, and the Black Ecumenical Leadership Alliance; and*

WHEREAS, *Bishop Spears served as District Overseer of the Full Gospel Baptist Church Fellowship in 2000, appointed State Overseer for North Texas in 2004, consecrated to the office of Bishop in 2005 serving North Texas for the Full Gospel Baptist Church Fellowship, and elevated to the Bishops Council in 2012 with the responsibility of promoting growth of the Full Gospel Baptist Fellowship; and*

WHEREAS, *Bishop Kenneth Bernard Spears, a strong pillar of his community, leaves a legacy of love as he is survived by his wife, Angela and their two sons, Kenneth Samuel and Kyle Brandon.*

NOW, THEREFORE, BE IT RESOLVED, *that we, the Commissioners Court of Tarrant County pay tribute and celebrate the life and legacy of a Beloved and Honorable Man of God, recognize the contributions he has made to the people of Tarrant County, and extend our deepest sympathy to the members of his family and his many friends for their great loss.*

IN WITNESS WHEREOF, *we have hereunto set our hands and caused the Seal of Tarrant County to be affixed this 9th day of December 2025.*

(Over Entire Court signatures)

TARRANT COUNTY
COMMISSIONERS COURT COMMUNICATION

Court Date: December 9, 2025	**Court Order #:**	**Page:** 1 of 1
Department: Commissioner, Precinct 2	**Prepared By:** Stefanye Adkins	**Approved By:** Albert Roberts

SUBJECT:

Memorial Resolution - Honoring the Life and Legacy of Elzie Odom (Commissioner Simmons)

See Attachment for Additional Information

Attachments

Resolution Honoring the Life and Legacy of Elzie Odom (002).pdf

Resolution Honoring the Life and Legacy of Elzie Odom

WHEREAS, the Tarrant County Commissioners Court and the citizens of Tarrant County mourn the passing of former Arlington Mayor Elzie Delano Odom on November 17, 2025; and

WHEREAS, Mayor Odom was born on May 10, 1929, in Newton County, Texas, and was raised in the historic freedom colony of Shankleville, Texas, grounding his life in the values of community, hard work, and service; and

WHEREAS, prior to his political career, he served his country with distinction as a dedicated employee of the United States Postal Service for over three decades, notably becoming one of the nation's first African American Postal Inspectors in 1967; and

WHEREAS, Mayor Odom became a true trailblazer, first by being elected the first African American city official in Orange County in 1965, and later, becoming the first African American elected to the Arlington City Council in 1990, where he served Place 4 until 1997; and

WHEREAS, as a councilman, he championed crucial civic projects, including serving as President of the Arlington Sports Facilities Development Authority, overseeing the construction of The Ballpark in Arlington, and successfully working to retain both the Texas Rangers and General Motors' Arlington Assembly within the city; and

WHEREAS, on May 6, 1997, he made history again by being elected the first African American Mayor of the City of Arlington, serving with distinction until 2003; and

WHEREAS, during his tenure as Mayor, his administration's major accomplishments included advocating for Arlington youth, supporting programs for seniors and citizens with disabilities, increasing minority representation on city boards and commissions, and prudently guiding the city to pay off The Ballpark in Arlington bond ahead of schedule; and

WHEREAS, his legacy is defined by his integrity, his commitment to making local government reflective of its populace, and his pioneering spirit that opened paths for countless others in Tarrant County; and

WHEREAS, we recognize that Mayor Elzie Odom's lifelong dedication to public service, his family, including his wife Ruby Lee Truvillion Odom and his children, grandchildren, great-grandchildren, and his community will be deeply missed but never forgotten.

NOW, THEREFORE, BE IT RESOLVED, that the Tarrant County Commissioners' Court hereby expresses its profound gratitude for the life and immeasurable contributions of Mayor Elzie Odom.

BE IT FURTHER RESOLVED, that this Court extends its deepest sympathies to the Odom family and directs that an official copy of this Resolution be presented to them as a token of the community's high esteem.

IN WITNESS WHEREOF, we have hereunto set our hands and caused the seal of Tarrant County to be affixed this 9th day of December 2025.

TARRANT COUNTY
COMMISSIONERS COURT COMMUNICATION

Court Date: December 9, 2025	**Court Order #:**	**Page:** 1 of 1
Department: Commissioner, Precinct 2	**Prepared By:** Albert Roberts	**Approved By:** Alisa Simmons

SUBJECT:

Resolution - Honoring Cresson Volunteer Fire Department Operations Chief Richard Ward for Heroic Actions on September 1, 2025 (Commissioner Simmons)

See Attachment for Additional Information

Attachments

Resolution.Cresson.Fire.Chief.Ward.pdf

RESOLUTION HONORING CRESSON VOLUNTEER FIRE DEPARTMENT OPERATIONS CHIEF RICHARD WARD FOR HEROIC ACTIONS ON SEPTEMBER 1, 2025

WHEREAS, on Labor Day, Monday, September 1, 2025, at approximately 8:24 PM, the Cresson Volunteer Fire Department was dispatched to a motor vehicle accident in the 8700 block of FM 1187 in southwestern Tarrant County involving multiple vehicles, entrapments, and a vehicle fire; and

WHEREAS, Cresson Volunteer Fire Department Operations Chief **Richard Ward** responded immediately, arriving on the scene just 3 minutes and 53 seconds after dispatch to find a catastrophic and chaotic situation with debris and human remains scattered across the roadway and one vehicle fully engulfed in flames; and

WHEREAS, upon arrival, Chief Ward quickly assessed the situation, stopping his vehicle away from danger, rushing to the burning vehicle, and discovering a fatally injured passenger and a trapped driver; and

WHEREAS, demonstrating remarkable composure, courage, and professionalism, Chief Ward cut away the passenger's seatbelt, removed her remains from the burning vehicle with the assistance of bystanders, and then risked his own safety to rescue the surviving driver from the fire through the passenger side; and

WHEREAS, within one minute and fifteen seconds after his arrival, Chief Ward had triaged six patients, requested additional ambulances, and launched air medical transport for the rescued driver, who later survived and was discharged from the ICU on September 27, 2025; and

WHEREAS, Chief Ward's decisive leadership ensured all patients were treated, transported, or ready for transport within 32 minutes of the initial call, earning unanimous commendation from responding EMS agencies for his exceptional scene management; and

NOW, THEREFORE, BE IT RESOLVED, *that we, the Commissioners Court of Tarrant County,* with the deepest gratitude and respect for his service and heroism, hereby commends Operations Chief Richard Ward of the Cresson Volunteer Fire Department for his extraordinary bravery, swift action, and dedication to saving lives under extreme and dangerous circumstances on September 1, 2025.

IN WITNESS WHEREOF*, we have here unto have set our hands and caused the Seal of Tarrant County to be affixed this 9th day of December 2025*

TARRANT COUNTY
COMMISSIONERS COURT COMMUNICATION

Court Date: December 9, 2025	**Court Order #:**	**Page:** 1 of 1
Department: Commissioner, Precinct 4	**Prepared By:** Alicia Green	**Approved By:** Tracey Knight

SUBJECT:

Resolution - 40th Anniversary of Tarrant County 911 (Commissioner Ramirez)

See Attachment for Additional Information

Attachments

TC911 40th Anniversay Resolution - Commissioners Court.pdf

Resolution Celebrating the 40th Anniversary of the Tarrant County 9-1-1 Emergency Assistance District

WHEREAS, the Tarrant County 9-1-1 Emergency Assistance District (District) is a communication district and a political subdivision of the State of Texas, established and operated pursuant to Texas Health and Safety Code, Chapter 772, Subchapter C, as amended; and

WHEREAS, the District was created on April 6, 1985, through state legislation and a vote of Tarrant County citizens to enhance emergency response capabilities and ensure that residents have reliable access to emergency services; and

WHEREAS, for 40 years, the District has served as a critical link between the public and emergency responders, managing advanced technology and systems that route 9-1-1 calls accurately and efficiently to the appropriate public safety answering points; and

WHEREAS, the District has continually embraced innovation, implementing Text-to-9-1-1, upgrading to Next Generation 9-1-1 technology, and maintaining redundancies to ensure uninterrupted service, thereby improving public safety for all residents, including vulnerable populations; and

WHEREAS, the District's mission remains steadfast: to provide prompt, reliable, and effective emergency communication services that protect life and property throughout Tarrant County; and

WHEREAS, the Commissioners Court recognizes the dedication of the District's leadership, staff, and partners who have worked tirelessly to advance emergency communication systems and safeguard the community;

NOW, THEREFORE, BE IT RESOLVED, that we, the Commissioners Court of Tarrant County, do hereby celebrate the 40th Anniversary of the Tarrant County 9-1-1 Emergency Assistance District, honor its vital contributions to public safety, and express profound appreciation for its continued commitment to excellence and innovation in emergency communications.

BE IT FURTHER RESOLVED, that a copy of this resolution be presented to the Tarrant County 9-1-1 Emergency Assistance District as a token of gratitude and recognition for four decades of outstanding service to the residents of Tarrant County, City of Irving, and Grand Prairie.

In Witness Whereof, we have, hereunto, set our hands and caused the seal of Tarrant County to be affixed this ___ day of _____, 2025.

TARRANT COUNTY
COMMISSIONERS COURT COMMUNICATION

Court Date: December 9, 2025	**Court Order #:**	**Page:** 1 of 1
Department: Human Resources	**Prepared By:** Jennifer Jones	**Approved By:** Roxie Held

SUBJECT:

Employee Recognition (Judge O'Hare)

See Attachment for Additional Information

Attachments

Judge's Listing December 2025.pdf

EMPLOYEE RECOGNITION
December 9, 2025

5 Year Employees		Department
Sascha	Anderson	Tax Office
Austin	Bridges	Sheriff's Office
Matthew	Case	Juvenile Services
Sheree	Coulter	Sheriff's Office
Luis	Nieves Rosado	Sheriff's Office
Saheed	Runsewe	Sheriff's Office
Morad	Sajaja	Sheriff's Office
Hector	Segovia, Jr.	Sheriff's Office
Sandra	Torres Bonilla	Public Health
Trevor	Vanderpool	Sheriff's Office
Jennifer	Weaver	Domestic Relations Office

10 Year Employees		Department
Juana	Brinlee	Criminal Courts
Gary	Champagne	Facilities Management
Darren	De La Cruz	Criminal District Attorney
Leanna	Kirk	County Clerk
William	Redmon, Jr.	Precinct 2

15 Year Employees	Department
No Employees	

20 Year Employees		Department
Ashley	Barnes	County Clerk
Michael	Blanford	Juvenile Services
Maleka	Gonzalez	Sheriff's Office
Raquel	Harmon	Sheriff's Office
Irma	Jimarez	District Clerk
Lorenzo	Macias	County Criminal Court 1
Elizabeth	Wall Johnson	Tax Office

25 Year Employees		Department
Georgia	Crittenden	County Criminal Court 7
Jennifer	Hicks	Juvenile Services
Maria	Perez	Justice of the Peace 6

30 Year Employees		Department
Dana	Victorson	Juvenile Services

Total Years 350

TARRANT COUNTY
COMMISSIONERS COURT COMMUNICATION

Court Date: December 9, 2025	**Court Order #:**	**Page:** 1 of 27
Department: County Clerk	**Prepared By:** Shay Stroik	**Approved By:** Vanessa Perez

SUBJECT:

Consideration to Approve the Minutes of November 11, 2025

See Attachment.

Attachments

Minutes November 11, 2025.pdf

MINUTES

TARRANT COUNTY
COMMISSIONERS COURT

Minutes of the Commissioners Court, Regular Term - REGULAR MEETING
Tuesday, November 11, 2025, 10:00 AM

All items have been so ordered. Official documents on file with the County Clerk

On Tuesday, November 11, 2025, at 10:00 AM the Honorable Commissioners Court of Tarrant County, Texas met for Regular Term - Regular Meeting in the Commissioners Courtroom at the G.K. Maenius Administration Building in the City of Fort Worth.

The Commissioners Court Clerk having called roll and a quorum being presented, Tim O'Hare, County Judge, called the meeting to order with members present:

PRESENT
Presiding - County Judge - Tim O'Hare
Commissioner, Precinct 1 – Roderick Miles, Jr.
Commissioner, Precinct 2 - Alisa Simmons
Commissioner, Precinct 3 - Matt Krause
Commissioner, Precinct 4 - Manny Ramirez

and County Clerk Mary Louise Nicholson, represented by her duly appointed Deputy April Hanks, when the following orders were made.

I. CALL TO ORDER AND ROLL CALL

II. INVOCATION

Invocation was given by Aaron Crider, Captain in the United States Air Force and Chaplain of Fort Worth Naval Air Station Joint Reserve Base in Fort Worth, Texas.

III. PLEDGES OF ALLEGIANCE TO THE UNITED STATES OF AMERICA

Tarrant County Election Administrator Clint Ludwig and Director of Veterans Services Thomas Belton, who both served in the Marine Corps, led us in the pledges.

IV. AGENDA ANNOUNCEMENTS

Items VI 7, VII G2, VII G3, VII G4 and sub items VIII F9t and VIII F9u were held.
Items VII C1, VII F8, VII F10, VII K6, VII N5, VII R1, VII R29, and VII R46 were pulled from the Consent Agenda.

V. COMMISSIONERS COURT ANNOUNCEMENTS

Commissioner Miles thanked all the veterans for their service and sacrifices. He announced that Precinct 1 will be having their town hall meeting in partnership with the Center for Transforming Lives on November 18th at 3001 South Riverside Drive in Fort Worth, Texas at 6:00 p.m. He invites all to attend the Healthy Lives Matter Prostate Screening Event on February 28, 2026 beginning at 10 a.m. at the Moncrief Cancer Institute. He gave a shout out to North Crowley High School, Coach Gates and the amazing Panthers, who will defend their state champion title against Keller High School on Thursday night. He congratulated the Human Resources Director Roxie Held and her team on their first countywide benefit fair event. With Thanksgiving season and the holiday season coming up he thanked and expressed his appreciation to all the staff members and the hard work that they do.

Commissioner Krause thanked the veterans for their service and sacrifices. He recognized and honored the students from the student voter empowerment club with HEB ISD.

Judge O'Hare mentioned in honor of adoption month that donations are being accepted now through November 14th and the donation bins are located at all sub courthouses, Resource Connection, Tim Curry Criminal Justice Center, Family Law Center, the 1895 Courthouse, Administration Building, Vandergriff Civil Courts Building, Plaza building and the Public Health building. His office is hosting a Toys for Tots toy drive on December 9th from 4 to 9 p.m. at South Lake Town Square and would love to receive many toys to give to those kids in need.

VI. PROCLAMATIONS, RESOLUTIONS AND PRESENTATIONS

(Court Order Number: 146199) 1. Employee Recognition (Judge O'Hare)

Motion to Receive and File made by Tim O'Hare and seconded by Manny Ramirez passing 5-0-0-0-0

(Court Order Number: 146200) 2. Resolution Honoring the 250th Birthday of the United States Marine Corps (Judge O'Hare)

Motion to Ratify made by Tim O'Hare and seconded by Alisa Simmons passing 5-0-0-0-0

Bishop Kirkland spoke about honoring the Marines.

(Court Order Number: 146201) 3. Resolution Recognizing Veterans Day (Judge O'Hare)

Motion to Adopt made by Tim O'Hare and seconded by Alisa Simmons passing 5-0-0-0-0

Bishop Kirkland honor and salutes all veterans and their families.

(Court Order Number: 146202) 4. Resolution Recognizing Tarrant County Adoption Day (Judge O'Hare)

Motion to Approve made by Tim O'Hare and seconded by Manny Ramirez passing 5-0-0-0-0

(Court Order Number: 146203) 5. Congratulatory Resolution - Sigma Gamma Rho Sorority, Incorporated 103rd Founders Day (Commissioner Miles)

Motion to Approve made by Roderick Miles, Jr. and seconded by Manny Ramirez passing 5-0-0-0-0

(Court Order Number: 146204) 6. Congratulatory Resolution - Karyn Purvis Institute of Child Development 20th Anniversary (Commissioner Miles)

Motion to Approve made by Roderick Miles, Jr. and seconded by Manny Ramirez passing 5-0-0-0-0

7. Resolution - Honoring Cresson Volunteer Fire Department Operations Chief Richard Ward for Heroic Actions on September 1, 2025 (Commissioner Simmons)

Item held.

VII. CONSENT AGENDA

Motion to Approve Consent Agenda as amended made by Manny Ramirez and seconded by Roderick Miles, Jr. passing 5-0-0-0-0

Court recessed at 11:00 a.m. and reconvened at 11:10 a.m.

A. APPROVAL OF THE MINUTES

(Court Order Number: 146205) 1. Approval of Minutes of October 14, 2025

Motion to Approve made by Manny Ramirez and seconded by Roderick Miles, Jr. passing 5-0-0-0-0

B. VARIOUS CLAIMS AND ADDENDUM

(Court Order Number: 146206) 1. Approval of Various Claims and Addendum

Motion to Approve made by Manny Ramirez and seconded by Roderick Miles, Jr. passing 5-0-0-0-0

C. Administrator

(Court Order Number: 146340) 1. Consideration of Agreement with Corley Consulting LLC for Washington D.C. Consulting Services

Motion to Approve made by Alisa Simmons and seconded by Roderick Miles, Jr. passing 5-0-0-0-0

Item was removed from the Consent Agenda.

(Court Order Number: 146207) 2. Consideration to Renew an Interlocal Agreement between Tarrant County and the City of Fort Worth Concerning Usage of Certain City Facilities for County Related Events

Motion to Approve made by Manny Ramirez and seconded by Roderick Miles, Jr. passing 5-0-0-0-0

(Court Order Number: 146208) 3. Consideration to Accept Payment of Disbursed Funds from City of Fort Worth Tax Increment Reinvestment Zone Number 6

Motion to Approve made by Manny Ramirez and seconded by Roderick Miles, Jr. passing 5-0-0-0-0

(Court Order Number: 146209) 4. Consideration of the Issuance of Series 2025 Hospital Revenue Bonds in One or More Series by the Tarrant County Cultural Education Facilities Finance Corporation for Ascension Health Alliance in an Amount Not to Exceed $1,585,000,000

Motion to Approve made by Manny Ramirez and seconded by Roderick Miles, Jr. passing 5-0-0-0-0

(Court Order Number: 146210) 5. Receive and File Texas General Land Office County Road Bonus Form with Diversified Production, LLC - Ref. 2.0400 Acres Comprising Wilbarger Street and Carey Street, Located within the Boundaries of the Whiz-Q West Unit, Covering a Portion of the J.M. Daniels SY., Abst 395, The D Strickland SY., Abst 1376, and the Ashabranner SY., Abst 7, Tarrant County, Texas

Motion to Approve made by Manny Ramirez and seconded by Roderick Miles, Jr. passing 5-0-0-0-0

D. Archives

(Court Order Number: 146211) 1. Consideration to Deaccession Collection Items from the Tarrant County Archives

Motion to Approve made by Manny Ramirez and seconded by Roderick Miles, Jr. passing 5-0-0-0-0

E. Auditor

(Court Order Number: 146212) 1. Consideration to Adopt an Order Acknowledging the Annual Review of the Tarrant County Investment Policy

Motion to Approve made by Manny Ramirez and seconded by Roderick Miles, Jr. passing 5-0-0-0-0

(Court Order Number: 146213) 2. Consideration of the Sheriff's Office Fiscal Year 2025 Equitable Sharing Agreement and Certification

Motion to Approve made by Manny Ramirez and seconded by Roderick Miles, Jr. passing 5-0-0-0-0

(Court Order Number: 146214) 3. Receive and File the Quarterly Investment Report Ended September 30, 2025

Motion to Approve made by Manny Ramirez and seconded by Roderick Miles, Jr. passing 5-0-0-0-0

(Court Order Number: 146215) 4. Receive and File the Auditor's Report for the Cash and Other Remittances Control Review, Constable Offices

Motion to Approve made by Manny Ramirez and seconded by Roderick Miles, Jr. passing 5-0-0-0-0

(Court Order Number: 146216) 5. Receive and File the Auditor's Report for the Cash and Other Remittances Control Review, Justice of the Peace Offices

Motion to Approve made by Manny Ramirez and seconded by Roderick Miles, Jr. passing 5-0-0-0-0

F. Budget and Risk Management

(Court Order Number: 146217) 1. Consideration of Fiscal Year 2025 and Fiscal Year 2026 Appropriation Adjustments

Motion to Approve made by Manny Ramirez and seconded by Roderick Miles, Jr. passing 5-0-0-0-0

(Court Order Number: 146218) 2. Consideration to Submit a Grant Application to the Texas Health and Human Services Commission for the Project for Assistance in Transition from Homelessness Grant to Support the Mental Health Jail Diversion Center

Motion to Approve made by Manny Ramirez and seconded by Roderick Miles, Jr. passing 5-0-0-0-0

(Court Order Number: 146219) 3. Consideration to Submit a Grant Application to the Texas Veterans Commission's Fund for Veterans' Assistance Department for Fiscal Year 2027 Veteran Treatment Court Grant Program Funding to Support the Tarrant County Veterans Treatment Court Specialty Court Program

Motion to Approve made by Manny Ramirez and seconded by Roderick Miles, Jr. passing 5-0-0-0-0

(Court Order Number: 146220) 4. Consideration to Submit a Grant Application and Resolution to Office of the Texas Governor's Public Safety Office for Fiscal Year 2026 Bullet-Resistant Components for Law Enforcement Vehicles Grant Program Funding to Support the Tarrant County Sheriff's Office

Motion to Approve made by Manny Ramirez and seconded by Roderick Miles, Jr. passing 5-0-0-0-0

(Court Order Number: 146221) 5. Consideration to Submit Preliminary Applications to the Texas Department of Transportation in Response to a Call for Projects for the Off-System Rail Grade Separation State Fund Program

Motion to Approve made by Manny Ramirez and seconded by Roderick Miles, Jr. passing 5-0-0-0-0

(Court Order Number: 146222) 6. Consideration to Accept the Fiscal Year 2026 State Criminal and Justice Planning Grant Award from the Office of the Governor, Criminal Justice Division, for the Human Trafficking Unit in the Tarrant County Criminal District Attorney's Office

Motion to Approve made by Manny Ramirez and seconded by Roderick Miles, Jr. passing 5-0-0-0-0

(Court Order Number: 146223) 7. Consideration to Accept the Fiscal Year 2026 Violence Against Women Formula Grant Award from the Office of the Governor, Criminal Justice Division, for the Tarrant County Criminal District Attorney's Protective Order Unit

Motion to Approve made by Manny Ramirez and seconded by Roderick Miles, Jr. passing 5-0-0-0-0

(Court Order Number: 146341) 8. Consideration to Accept Fiscal Year 2026 General Victim Assistance Direct Services Program Grant Award from the Office of the Governor, Criminal Justice Division, for the Criminal District Attorney's Office Victim Services Unit

Motion to Approve made by Manny Ramirez and seconded by Matt Krause passing 5-0-0-0-0

Item removed from the Consent Agenda.

(Court Order Number: 146224) 9. Consideration of a Resolution Submitted to the Office of the Texas Governor's Homeland Security Division to Seek Urban Area Security Initiative Grant Program Funding for the Emergency Operation Center Technology Enhancement Project

Motion to Approve made by Manny Ramirez and seconded by Roderick Miles, Jr. passing 5-0-0-0-0

(Court Order Number: 146342) 10. Consideration of Exceptions to Fee Schedule for Court Interpreters

Motion to Approve made by Tim O'Hare and seconded by Matt Krause passing 5-0-0-0-0

Item removed from the Consent Agenda.

(Court Order Number: 146225) 11. Consideration of Risk Management Board Minutes and Recommended Claims

Motion to Approve made by Manny Ramirez and seconded by Roderick Miles, Jr. passing 5-0-0-0-0

G. Community Development

(Court Order Number: 146226) 1. Bid No. 2025CD-14 Consideration of Construction Contract between Tarrant County and Tex-Pro Construction for Haltom City, Texas 50th Year Community Development Block Grant Project

Motion to Approve made by Manny Ramirez and seconded by Roderick Miles, Jr. passing 5-0-0-0-0

2. RFQ-2025ENG-54-50 Consideration of Engineering Contract Between Tarrant County and MJ Thomas Engineering for the City of River Oaks 51st Year Community Development Block Grant Project

Item held.

3. Consideration of a Community Development Block Grant Subrecipient Agreement between Tarrant County and SafeHaven of Tarrant County for the Provision of Educational Services to Youth

Item held.

4. Consideration of Program Year 2025 Emergency Solutions Grant Program Subrecipient Agreements between Tarrant County and Non-Profit Agencies in Tarrant County for Emergency Shelter Operations

Item held.

H. County Clerk

(Court Order Number: 146227) 1. Receive and File the County Clerk's Monthly Report - September 2025

Motion to Approve made by Manny Ramirez and seconded by Roderick Miles, Jr. passing 5-0-0-0-0

I. Dispute Resolution

(Court Order Number: 146228) 1. Consideration to Accept a Monetary Donation from Stories to Solutions for Tarrant County Dispute Resolution

Motion to Approve made by Manny Ramirez and seconded by Roderick Miles, Jr. passing 5-0-0-0-0

J. District Attorney

(Court Order Number: 146229) 1. Consideration of the Tarrant County Criminal District Attorney’s Fiscal Year 2025 Annual Equitable Sharing Agreement and Certification Report and Authorize its Submission to the United States Department of Justice and Department of Treasury

Motion to Approve made by Manny Ramirez and seconded by Roderick Miles, Jr. passing 5-0-0-0-0

K. Facilities Management

(Court Order Number: 146230) 1. Consideration of a Professional Services Contract with Baird, Hampton and Brown for Engineering Services for the Corrections Center Building Heat Boiler Replacement Project

Motion to Approve made by Manny Ramirez and seconded by Roderick Miles, Jr. passing 5-0-0-0-0

(Court Order Number: 146231) 2. Consideration of a Professional Services Contract with Palmetto Air and Water Balance for Professional Services for the Public Health Building Rebalance Project

Motion to Approve made by Manny Ramirez and seconded by Roderick Miles, Jr. passing 5-0-0-0-0

(Court Order Number: 146232) 3. Consideration of a Professional Services Contract with Palmetto Air and Water Balance for Professional Services for the Public Health Building Replacement of Existing 250 Ton Chillers Project

Motion to Approve made by Manny Ramirez and seconded by Roderick Miles, Jr. passing 5-0-0-0-0

(Court Order Number: 146233) 4. Consideration of Change Order No. 1 to the Blackhawk Construction, LLC Construction Services Contract for the Corrections Center Gym Doors Replacement Project

Motion to Approve made by Manny Ramirez and seconded by Roderick Miles, Jr. passing 5-0-0-0-0

(Court Order Number: 146234) 5. Consideration of Change Order No. 1 to HM & MF LTD. d/b/a Muckleroy & Falls Construction Services Contract for the Plaza Garage Expansion

Motion to Approve made by Manny Ramirez and seconded by Roderick Miles, Jr. passing 5-0-0-0-0

(Court Order Number: 146343) 6. Consideration to Accept a Donation of Labor from Zenith Roofing and Waterproofing, LLC., for the Installation and Temporary Loan of Exterior Christmas Lights at the J.D. Johnson Northwest Sub courthouse

Motion to Approve made by Manny Ramirez and seconded by Matt Krause passing 5-0-0-0-0

Item removed from the Consent Agenda.

(Court Order Number: 146235) 7. Consideration of a Building Renovation of the Charles F. Griffin Sub-Courthouse for County Clerk's Office

Motion to Approve made by Manny Ramirez and seconded by Roderick Miles, Jr. passing 5-0-0-0-0

(Court Order Number: 146236) 8. Consideration of a Property Use Request from the Texas Department of Family and Protective Services to Use the Sub Courthouse in Arlington Community Room for a Holiday Leadership Meeting

Motion to Approve made by Manny Ramirez and seconded by Roderick Miles, Jr. passing 5-0-0-0-0

(Court Order Number: 146237) 9. Consideration of a Property Use Request from The Rally for Education to Use the Family Law Center Assembly Room to Hold their 31st Annual Santa Goes to Jail Event

Motion to Approve made by Manny Ramirez and seconded by Roderick Miles, Jr. passing 5-0-0-0-0

(Court Order Number: 146238) 10. Consideration of a Property Use Request from Justice of the Peace, Precinct 7 to Use the Sub courthouse at Mansfield to Conduct Weddings

Motion to Approve made by Manny Ramirez and seconded by Roderick Miles, Jr. passing 5-0-0-0-0

L. HIV Administration

(Court Order Number: 146239) 1. Consideration of Amendment No. 1 to the Fiscal Year 2025-2026 Health Resources and Services Administration Ryan White Part D Subrecipient Contract with CAN Community Health, Inc.

Motion to Approve made by Manny Ramirez and seconded by Roderick Miles, Jr. passing 5-0-0-0-0

(Court Order Number: 146240) 2. Consideration of Amendment No. 1 to the Fiscal Year 2025-2026 Texas Department of State Health Services AIDS Drug Assistance Program Contract

Motion to Approve made by Manny Ramirez and seconded by Roderick Miles, Jr. passing 5-0-0-0-0

(Court Order Number: 146241) 3. Consideration of Amendment No. 2 to the Fiscal Year 2025-2026 Health Resources and Services Administration Ending the HIV Epidemic: A Plan for America – Ryan White HIV/AIDS Program Parts A and B Subrecipient Contract with Tarrant County Hospital District

Motion to Approve made by Manny Ramirez and seconded by Roderick Miles, Jr. passing 5-0-0-0-0

(Court Order Number: 146242) 4. Consideration of Amendment No. 2 to the Fiscal Year 2025 Health Resources and Services Administration Ryan White Treatment Extension Act Part C Subrecipient Contract with CAN Community Health, Inc.

Motion to Approve made by Manny Ramirez and seconded by Roderick Miles, Jr. passing 5-0-0-0-0

M. Housing Assistance Office

(Court Order Number: 146243) 1. Consideration to Submit a Section 8 Management Assessment Program Certification to the
U.S. Department of Housing and Urban Development for the Tarrant County Housing Assistance Office

Motion to Approve made by Manny Ramirez and seconded by Roderick Miles, Jr. passing 5-0-0-0-0

(Court Order Number: 146244) 2. Consideration of Housing Assistance Payments Contracts and/or Contract Amendments between Landlords and Tarrant County, d/b/a Tarrant County Housing Assistance Office

Motion to Approve made by Manny Ramirez and seconded by Roderick Miles, Jr. passing 5-0-0-0-0

N. Human Resources

(Court Order Number: 146245) 1. Consideration of the Annually Determined Contribution Rate to the Texas County and District Retirement System

Motion to Approve made by Manny Ramirez and seconded by Roderick Miles, Jr. passing 5-0-0-0-0

(Court Order Number: 146246) 2. Consideration of an Interlocal Agreement between Tarrant County and the City of Dallas for Participation in the Cooperative Purchasing Program with Standard Insurance Company Contract for Voluntary Employee Benefits

Motion to Approve made by Manny Ramirez and seconded by Roderick Miles, Jr. passing 5-0-0-0-0

(Court Order Number: 146247) 3. Consideration of the Benefit Program Application between Tarrant County and Blue Cross Blue Shield of Texas for Benefits Administration Services

Motion to Approve made by Manny Ramirez and seconded by Roderick Miles, Jr. passing 5-0-0-0-0

(Court Order Number: 146248) 4. Consideration of an Amendment to the Group Long Term Disability Policy with Standard Insurance Company

Motion to Approve made by Manny Ramirez and seconded by Roderick Miles, Jr. passing 5-0-0-0-0

(Court Order Number: 146344) 5. Consideration of Out-of-Class Pay Extension - Budget

Motion to Approve made by Manny Ramirez and seconded by Matt Krause passing 4-1-0-0-0 Opposed by Alisa Simmons
Item removed from the Consent Agenda.

(Court Order Number: 146249) 6. Consideration of Out-of-Class Pay Extension - Office of Communications

Motion to Approve made by Manny Ramirez and seconded by Roderick Miles, Jr. passing 5-0-0-0-0

(Court Order Number: 146250) 7. Consideration of Changes to the Table of Organization - Housing

Motion to Approve made by Manny Ramirez and seconded by Roderick Miles, Jr. passing 5-0-0-0-0

(Court Order Number: 146251) 8. Receive and File the Personnel Agenda

Motion to Approve made by Manny Ramirez and seconded by Roderick Miles, Jr. passing 5-0-0-0-0

O. Judicial Courts

(Court Order Number: 146252) 1. Consideration of an Educational Affiliation Agreement between Tarrant County and the University of North Texas Regarding Social Work Students Participating in the Court Visitor Program in Probate Court No. 2

Motion to Approve made by Manny Ramirez and seconded by Roderick Miles, Jr. passing 5-0-0-0-0

P. Juvenile Services

(Court Order Number: 146253) 1. Consideration of the Memorandum of Understanding with the Fort Worth Independent School District for the 2025-2026 School Year at the Lynn W. Ross Juvenile Detention Center

Motion to Approve made by Manny Ramirez and seconded by Roderick Miles, Jr. passing 5-0-0-0-0

(Court Order Number: 146254) 2. Consideration of the Agreement for Data Sharing between Tarrant County and the Fort Worth Independent School District for the 2025-2026 School Year at the Tarrant County Juvenile Justice Alternative Education Program

Motion to Approve made by Manny Ramirez and seconded by Roderick Miles, Jr. passing 5-0-0-0-0

(Court Order Number: 146255) 3. Consideration of the Agreement for Data Sharing between Tarrant County and the Fort Worth Independent School District for the 2025-2026 School Year at the Lynn W. Ross Detention Center

Motion to Approve made by Manny Ramirez and seconded by Roderick Miles, Jr. passing 5-0-0-0-0

Q. Public Health

(Court Order Number: 146256) 1. Consideration of a Participating Provider Agreement with Parkland Community Health Plan, Inc., and its Affiliates, to Accept the PCHP Benefit Plan for Clinical Health Care Services Provided at the Tarrant County Public Health Department

Motion to Approve made by Manny Ramirez and seconded by Roderick Miles, Jr. passing 5-0-0-0-0

(Court Order Number: 146257) 2. Consideration of Procedures of Collaboration Agreement with the Texas Department of State Health Services for Continued Participation in the Texas Infertility Prevention Project to Promote Identification, Treatment and Prevention of Sexually Transmitted Infections

Motion to Approve made by Manny Ramirez and seconded by Roderick Miles, Jr. passing 5-0-0-0-0

(Court Order Number: 146258) 3. Consideration of Amendment No. 3 to the Texas Department of State Health Services Sexually Transmitted Infections/Human Immunodeficiency Virus Prevention Services Grant Contract

Motion to Approve made by Manny Ramirez and seconded by Roderick Miles, Jr. passing 5-0-0-0-0

(Court Order Number: 146259) 4. Consideration of Amendment No. 4 to the Texas Department of State Health Services Community Preparedness Section/Laboratory Response Network-Public Health Emergency Preparedness Grant Agreement

Motion to Approve made by Manny Ramirez and seconded by Roderick Miles, Jr. passing 5-0-0-0-0

(Court Order Number: 146260) 5. Consideration of Amendment No. 4 to the Texas Department of State Health Services Community Preparedness Section/Hazards – Public Health Emergency Preparedness Grant Agreement

Motion to Approve made by Manny Ramirez and seconded by Roderick Miles, Jr. passing 5-0-0-0-0

R. Purchasing

(Court Order Number: 146345) 1. RFO No. F2026018 - Purchase of SAP SuccessFactors Software Licenses - GSA#47QSWA18D008F - Information Technology - Carahsoft Technology Corp. - Per Unit Price

Motion to Approve made by Alisa Simmons and seconded by Tim O'Hare passing 5-0-0-0-0

Item removed from the Consent Agenda.

(Court Order Number: 146261) 2. Bid No. F2026016 - Sale of Recycled Paper for 80+ Tons of Sorted White Ledger, 40+ Tons of Sorted Office Paper, and 40+ Tons of Old Corrugated Cardboard - Facilities Management

Motion to Approve made by Manny Ramirez and seconded by Roderick Miles, Jr. passing 5-0-0-0-0

(Court Order Number: 146262) 3. Bid No. F2025139 - Purchase of Dump Trucks - Precincts 1 and 4

Motion to Approve made by Manny Ramirez and seconded by Roderick Miles, Jr. passing 5-0-0-0-0

(Court Order Number: 146263) 4. RFP No. F2025166 - Annual Contract for Court Resources Scheduling Tool - Criminal Courts

Motion to Approve made by Manny Ramirez and seconded by Roderick Miles, Jr. passing 5-0-0-0-0

(Court Order Number: 146264) 5. RFP No. F2025181 - Annual Contract for Translation and Interpretation Services - Countywide

Motion to Approve made by Manny Ramirez and seconded by Roderick Miles, Jr. passing 5-0-0-0-0

(Court Order Number: 146265) 6. RFP No. 2022-215 - Annual Contract for Epitrax Cloud Hosting, Support, and Professional Services - Public Health - Resolve Tech Solutions, LLC - Exercise Third Option for Renewal - Same Contract Terms

Motion to Approve made by Manny Ramirez and seconded by Roderick Miles, Jr. passing 5-0-0-0-0

(Court Order Number: 146266) 7. Bid No. 2023-022 - Annual Contract for Office Supplies and Other Miscellaneous Products - Countywide - Various Vendors - Exercise Third Option for Renewal - Same Firm Fixed Prices and Discount from List Price

Motion to Approve made by Manny Ramirez and seconded by Roderick Miles, Jr. passing 5-0-0-0-0

(Court Order Number: 146267) 8. RFP No. 2023-153 - Annual Contract for ServiceNow Professional Services - Information Technology - CDW Government LLC - Exercise Second Option for Renewal - Same Contract Terms

Motion to Approve made by Manny Ramirez and seconded by Roderick Miles, Jr. passing 5-0-0-0-0

(Court Order Number: 146268) 9. RFP No. F2024014 - Annual Contract for Professional Investigative Services of Applicants for Bondsman License - Countywide - Bearden Investigative Agency - Exercise Second and Final Option for Renewal - Same Contract Terms

Motion to Approve made by Manny Ramirez and seconded by Roderick Miles, Jr. passing 5-0-0-0-0

(Court Order Number: 146269) 10. Bid No. F2024142 - Annual Contract for Automotive Equipment and Installation - Countywide - Various Vendors - Exercise Second and Final Option for Renewal - Same Firm Fixed Prices

Motion to Approve made by Manny Ramirez and seconded by Roderick Miles, Jr. passing 5-0-0-0-0

(Court Order Number: 146270) 11. Bid No. F2024177 - Annual Contract for Dishwashing and Laundry Chemicals - Countywide
- Various Vendors - Exercise First Option for Renewal - Same Firm Fixed Prices and Discount from List Price

Motion to Approve made by Manny Ramirez and seconded by Roderick Miles, Jr. passing 5-0-0-0-0

(Court Order Number: 146271) 12. RFP No. F2024185 - Annual Contract for School Based Delinquency Prevention - Juvenile Services - Lena Pope Home, Inc. - Exercise First Option for Renewal - Same Contract Terms

Motion to Approve made by Manny Ramirez and seconded by Roderick Miles, Jr. passing 5-0-0-0-0

(Court Order Number: 146272) 13. Bid No. F2025015 - Annual Contract for Various Concrete Services - Countywide - Various Vendors - Exercise First Option for Renewal - Same Firm Fixed Prices and Hourly Rates

Motion to Approve made by Manny Ramirez and seconded by Roderick Miles, Jr. passing 5-0-0-0-0

(Court Order Number: 146273) 14. RFQ No. F2025021 - Annual Contract for Engineering and Planning Services - Transportation Services - Various Vendors - Exercise First Option for Renewal - Same Contract Terms

Motion to Approve made by Manny Ramirez and seconded by Roderick Miles, Jr. passing 5-0-0-0-0

(Court Order Number: 146274) 15. Bid No. F2025044 - Annual Contract for Wrecker Service - Countywide - Various Vendors - Exercise First Option for Renewal - Same Firm Fixed Prices and Hourly Rates

Motion to Approve made by Manny Ramirez and seconded by Roderick Miles, Jr. passing 5-0-0-0-0

(Court Order Number: 146275) 16. RFQ No. F2025045 - Annual Contract for Light and Medium-Duty Non-Consent Towing Services - Sheriff ’s Office - Various Vendors - Exercise First Option for Renewal - Same Contract Terms

Motion to Approve made by Manny Ramirez and seconded by Roderick Miles, Jr. passing 5-0-0-0-0

(Court Order Number: 146276) 17. RFQ No. F2025046 - Annual Contract for Heavy-Duty Non-Consent Towing Services - Sheriff ’s Office - Various Vendors - Exercise First Option for Renewal - Same Contract Terms

Motion to Approve made by Manny Ramirez and seconded by Roderick Miles, Jr. passing 5-0-0-0-0

(Court Order Number: 146277) 18. Bid No. F2025082 - Annual Contract for Transportation of Human Remains - Medical Examiner’s Office - Fort Worth Funerals and Cremations - Exercise First Option for Renewal - Same Firm Fixed Prices

Motion to Approve made by Manny Ramirez and seconded by Roderick Miles, Jr. passing 5-0-0-0-0

(Court Order Number: 146278) 19. Acceptance of Payment Bond - BuyBoard Contract #780-25 - General Disaster Recovery and Restoration Services - Facilities Management - Belfor USA Group, Inc. d/b/a BELFOR Property Restoration

Motion to Approve made by Manny Ramirez and seconded by Roderick Miles, Jr. passing 5-0-0-0-0

(Court Order Number: 146279) 20. Bid No. F2024168 - Annual Contract for Preventative Maintenance and Repair of Automatic Sliding Gate Operators - Precinct 1 Maintenance Facility - Dallas Automatic Gate, Inc.

Motion to Approve made by Manny Ramirez and seconded by Roderick Miles, Jr. passing 5-0-0-0-0

(Court Order Number: 146280) 21. Bid No. F2025103 - Annual Contract for Preventative Maintenance and Repair of Standby Generator Equipment - Facilities Management - Texas Industrial Infrastructure Services, LLC

Motion to Approve made by Manny Ramirez and seconded by Roderick Miles, Jr. passing 5-0-0-0-0

(Court Order Number: 146281) 22. Bid No. F2025184 - Annual Contract for Mechanical and Plumbing Services - Countywide - Enviromatic Systems, Inc.

Motion to Approve made by Manny Ramirez and seconded by Roderick Miles, Jr. passing 5-0-0-0-0

(Court Order Number: 146282) 23. Kirby-Smith Machinery, Inc. - Wirtgen/Hamm/Vogel Equipment, Services and Repairs - Countywide

Motion to Approve made by Manny Ramirez and seconded by Roderick Miles, Jr. passing 5-0-0-0-0

(Court Order Number: 146283) 24. Nemo-Q, Inc. - Nemo-Q Branded Software, Products, and Service - Countywide

Motion to Approve made by Manny Ramirez and seconded by Roderick Miles, Jr. passing 5-0-0-0-0

(Court Order Number: 146284) 25. eClinicalWorks, LLC - Cloud and Database Access and Population Health Management Tool
- Public Health

Motion to Approve made by Manny Ramirez and seconded by Roderick Miles, Jr. passing 5-0-0-0-0

(Court Order Number: 146285) 26. Hart InterCivic, Inc. - Hart InterCivic Verity Voting System and Associated Software, Hardware, Accessories, Consumables, Maintenance, and Repair - Elections Administration

Motion to Approve made by Manny Ramirez and seconded by Roderick Miles, Jr. passing 5-0-0-0-0

(Court Order Number: 146286) 27. Southwest Solutions Group - Distribution, Maintenance, Repair and Service of SpaceSaver Equipment - Countywide

Motion to Approve made by Manny Ramirez and seconded by Roderick Miles, Jr. passing 5-0-0-0-0

(Court Order Number: 146287) 28. Wireless Data Systems, Inc. - Elections Inventory Management System Software - Elections Administration

Motion to Approve made by Manny Ramirez and seconded by Roderick Miles, Jr. passing 5-0-0-0-0

(Court Order Number: 146346) 29. Consideration of Amendment No. 1 - RFP No. F2024145 - Annual Contract for Oblique and Orthophotography Aerial Imagery Services - Information Technology - Pictometry International Corp. d/b/a EagleView

Motion to Approve made by Alisa Simmons and seconded by Roderick Miles, Jr. passing 3-2-0-0-0 Opposed by Matt Krause, Tim O'Hare

Item was removed from the Consent Agenda.
Joe Palmer spoke against the annual contract for Oblique and Orthophotography Aerial Imagery Services.

(Court Order Number: 146288) 30. Consideration of Cooperative for Cloud Platform and Hosting Services - #DIR-CPO-5172 - Information Technology - Amazon Web Services, Inc.

Motion to Approve made by Manny Ramirez and seconded by Roderick Miles, Jr. passing 5-0-0-0-0

(Court Order Number: 146289) 31. Consideration of Cooperative for Digital Media Evidence Collections Platform - BuyBoard #743-24 - District Attorney's Office - Axon Enterprises, Inc. - Per Discount from List Price

Motion to Approve made by Manny Ramirez and seconded by Roderick Miles, Jr. passing 5-0-0-0-0

(Court Order Number: 146290) 32. Consideration of Cooperative for Facility Maintenance Equipment and Services - BuyBoard #757-24 - Facilities Management - Various Vendors - Per Hourly Rates and Discount from List Price

Motion to Approve made by Manny Ramirez and seconded by Roderick Miles, Jr. passing 5-0-0-0-0

(Court Order Number: 146291) 33. Consideration of Cooperative for General Disaster Recovery and Restoration Services - BuyBoard #780-25 - Facilities Management - Various Vendors - Per Contract Terms and Discount from List Price

Motion to Approve made by Manny Ramirez and seconded by Roderick Miles, Jr. passing 5-0-0-0-0

(Court Order Number: 146292) 34. Consideration of Cooperative for GrayKey Software Subscription - #DIR-CPO-5687 - District Attorney's Office - Carahsoft Technology Corporation

Motion to Approve made by Manny Ramirez and seconded by Roderick Miles, Jr. passing 5-0-0-0-0

(Court Order Number: 146293) 35. Consideration of Cooperative for HVAC Equipment, Supplies, and Installation - BuyBoard #720-23 - Facilities Management - Various Vendors - Per Hourly Rates and Discount from List Price

Motion to Approve made by Manny Ramirez and seconded by Roderick Miles, Jr. passing 5-0-0-0-0

(Court Order Number: 146294) 36. Consideration of Cooperative for Information Technology Solutions, Products and Services - OMNIA Partners #R2024056-02 - Countywide - Various Vendors - Discount from List Price and Hourly Rates

Motion to Approve made by Manny Ramirez and seconded by Roderick Miles, Jr. passing 5-0-0-0-0

(Court Order Number: 146295) 37. Consideration of Cooperative for Microsoft Windows 10 Extended Security Updates Program
- #DIR-CPO-5237 - Information Technology - SHI Government Solutions, Inc.

Motion to Approve made by Manny Ramirez and seconded by Roderick Miles, Jr. passing 5-0-0-0-0

(Court Order Number: 146296) 38. Consideration of Cooperative for Purchase of Everbridge Subscription Services - GSA #47QTCA24D0083 - Public Health - Everbridge, Inc.

Motion to Approve made by Manny Ramirez and seconded by Roderick Miles, Jr. passing 5-0-0-0-0

(Court Order Number: 146297) 39. Consideration of Cooperative for Vaccines and the Full Range of Goods and Services - Minnesota Multistate Contracting Alliance for Pharmacy - Public Health

Motion to Approve made by Manny Ramirez and seconded by Roderick Miles, Jr. passing 5-0-0-0-0

(Court Order Number: 146298) 40. Consideration for Property Coverage Insurance - Budget and Risk Management - Texas Association of Counties Risk Management Pool

Motion to Approve made by Manny Ramirez and seconded by Roderick Miles, Jr. passing 5-0-0-0-0

(Court Order Number: 146299) 41. Consideration of Request for Fuel Cards - Precinct 2

Motion to Approve made by Manny Ramirez and seconded by Roderick Miles, Jr. passing 5-0-0-0-0

(Court Order Number: 146300) 42. Consideration of Request for Fleet Fuel Cards - Sheriff's Office

Motion to Approve made by Manny Ramirez and seconded by Roderick Miles, Jr. passing 5-0-0-0-0

(Court Order Number: 146301) 43. Authorization to Submit Procurement Card Account Application Forms to JPMorgan Chase Bank for Tarrant County Procurement Cards - Sheriff's Office

Motion to Approve made by Manny Ramirez and seconded by Roderick Miles, Jr. passing 5-0-0-0-0

(Court Order Number: 146302) 44. Authorization to Submit Procurement Card Account Application Form to JPMorgan Chase Bank for Tarrant County Procurement Card - Texas A&M AgriLife Extension

Motion to Approve made by Manny Ramirez and seconded by Roderick Miles, Jr. passing 5-0-0-0-0

(Court Order Number: 146303) 45. Consideration of Interlocal Agreement Between Tarrant County and Brazos River Authority for Cooperative Purchasing of Goods and Services

Motion to Approve made by Manny Ramirez and seconded by Roderick Miles, Jr. passing 5-0-0-0-0

(Court Order Number: 146347) 46. Consideration of Tarrant County Purchasing Policies and Procedures Manual Revisions - Amendment of Section 10

Motion to Approve made by Tim O'Hare and seconded by Matt Krause passing 5-0-0-0-0

Item removed from the Consent Agenda.

Joe Palmer spoke against the purchasing policies and procedures manual revisions.

S. Resource Connection

(Court Order Number: 146304) 1. Consideration of a Partner Location Agreement between Tarrant County, d/b/a Tarrant County Resource Connection Aquatic Center and Tivity Health Services, LLC to Provide Access to Tivity's SilverSneakers Program to Eligible Members of the Aquatic Center

Motion to Approve made by Manny Ramirez and seconded by Roderick Miles, Jr. passing 5-0-0-0-0

(Court Order Number: 146305) 2. Consideration of a Proposal Submitted to the Tarrant County Workforce Development Board, d/b/a Workforce Solutions of Tarrant County Related to the Request for Proposals Issued for Resource Connection Workforce Center Office Space Lease

Motion to Approve made by Manny Ramirez and seconded by Roderick Miles, Jr. passing 5-0-0-0-0

(Court Order Number: 146306) 3. Consideration of Amendment No. 8 to the Lease Agreement Between Tarrant County and the Texas Workforce Commission-Vocational Rehabilitation Services for Office Space Located at the Resource Connection

Motion to Approve made by Manny Ramirez and seconded by Roderick Miles, Jr. passing 5-0-0-0-0

T. Sheriff

(Court Order Number: 146307) 1. Consideration of Memorandum of Understanding between Tarrant County and the National Cutting Horse Association for the Preparation and Implementation of Plans to Prevent Human Trafficking at Events

Motion to Approve made by Manny Ramirez and seconded by Roderick Miles, Jr. passing 5-0-0-0-0

(Court Order Number: 146308) 2. Consideration of Fiscal Year 2026 Agency Interlocal Assistance Agreements with the City of Arlington, City of Euless, City of Fort Worth, City of Grapevine, City of Haltom City, City of Hurst, City of Weatherford, City of White Settlement, Parker County and Wise County for Participation in the Tarrant Regional Auto Crimes Task Force

Motion to Approve made by Manny Ramirez and seconded by Roderick Miles, Jr. passing 5-0-0-0-0

U. Tax Assessor-Collector

(Court Order Number: 146309) 1. Consideration of the Tarrant County Tax Roll for Tax Year 2025

Motion to Approve made by Manny Ramirez and seconded by Roderick Miles, Jr. passing 5-0-0-0-0

(Court Order Number: 146310) 2. Consideration of the Tarrant County Hospital District Tax Roll for Tax Year 2025

Motion to Approve made by Manny Ramirez and seconded by Roderick Miles, Jr. passing 5-0-0-0-0

(Court Order Number: 146311) 3. Consideration of webDEALER License Agreement between Tarrant County, d/b/a Tarrant County Tax Assessor-Collector and Sprout Automotive LLC, d/b/a Carvana CDJR Fiat of Park Cities to Electronically Process Motor Vehicle Titles and Registrations

Motion to Approve made by Manny Ramirez and seconded by Roderick Miles, Jr. passing 5-0-0-0-0

(Court Order Number: 146312) 4. Consideration of Tax Office Deputizations

Motion to Approve made by Manny Ramirez and seconded by Roderick Miles, Jr. passing 5-0-0-0-0

V. Transportation

(Court Order Number: 146313) 1. Request for Public Hearing - Tuesday, December 16, 2025, 10:00 A.M. - To Consider Authorizing Placement of a Stop Sign on Mustang Wells Drive at the Intersection with Ben Day Murrin Road - Precinct 2

Motion to Approve made by Manny Ramirez and seconded by Roderick Miles, Jr. passing 5-0-0-0-0

(Court Order Number: 146314) 2. Request for Public Hearing - Tuesday, December 16, 2025, 10:00 A.M. - To Consider Establishing a Speed Limit of 35 MPH on Eagle Mountain Circle - Precinct 4

Motion to Approve made by Manny Ramirez and seconded by Roderick Miles, Jr. passing 5-0-0-0-0

(Court Order Number: 146315) 3. Consideration to Authorize the Installation of Multiple Stop Signs within the Newark Ranch Subdivision - Precinct 4- 11:00 AM

Motion to Approve made by Manny Ramirez and seconded by Roderick Miles, Jr. passing 5-0-0-0-0

(Court Order Number: 146316) 4. Consideration of a Professional Services Agreement with GFT Infrastructure, Inc. Related to the Wichita Street Widening Project

Motion to Approve made by Manny Ramirez and seconded by Roderick Miles, Jr. passing 5-0-0-0-0

(Court Order Number: 146317) 5. Consideration to Appoint Transportation Services as the Licensing Designee for the On-Site Sewage Facilities in Unincorporated Tarrant County and Adopt a Change to the Current Development Rules Related to the On-Site Sewage Facility Program

Motion to Approve made by Manny Ramirez and seconded by Roderick Miles, Jr. passing 5-0-0-0-0

(Court Order Number: 146318) 6. Consideration of an Interlocal Agreement between Tarrant County and the City of Arlington Related to the Arlington Access Bridge Project - 2021 Transportation Bond Program

Motion to Approve made by Manny Ramirez and seconded by Roderick Miles, Jr. passing 5-0-0-0-0

(Court Order Number: 146319) 7. Consideration of First Amendment to the Interlocal Agreement between Tarrant County and the City of Fort Worth to Continue Participation in the City's Drop-Off Station Voucher Program for Residential Waste Disposal and Recycling

Motion to Approve made by Manny Ramirez and seconded by Roderick Miles, Jr. passing 5-0-0-0-0

(Court Order Number: 146320) 8. Consideration of Second Amendment to the Interlocal Agreement between Tarrant County and the City of Fort Worth to Continue Participation in the City's Environmental Collection Center Household Hazardous Waste Program

Motion to Approve made by Manny Ramirez and seconded by Roderick Miles, Jr. passing 5-0-0-0-0

(Court Order Number: 146321) 9. Consideration of Amendment No. 3 to the Interlocal Agreement between Tarrant County and the City of Forest Hill Related to the Wichita Street Widening Project - 2021 Transportation Bond Program

Motion to Approve made by Manny Ramirez and seconded by Roderick Miles, Jr. passing 5-0-0-0-0

(Court Order Number: 146322) 10. Consideration of Final Plat and Construction Bond - Prairie Hill Addition, Phase 2 - Precinct 2

Motion to Approve made by Manny Ramirez and seconded by Roderick Miles, Jr. passing 5-0-0-0-0

(Court Order Number: 146323) 11. Receive and File - City of Fort Worth Annexation Ordinance No. 27815-06-2025 (Case No. AX-23-011) - Precincts 2 and 4

Motion to Approve made by Manny Ramirez and seconded by Roderick Miles, Jr. passing 5-0-0-0-0

(Court Order Number: 146324) 12. Receive and File - City of Fort Worth Annexation Ordinance No. 27816-06-2025 (Case No. AX-24-017) - Precincts 2 and 4

Motion to Approve made by Manny Ramirez and seconded by Roderick Miles, Jr. passing 5-0-0-0-0

(Court Order Number: 146325) 13. Receive and File - City of Fort Worth Annexation Ordinance No. 27817-06-2025 (Case No. AX-24-016) - Precinct 4

Motion to Approve made by Manny Ramirez and seconded by Roderick Miles, Jr. passing 5-0-0-0-0

(Court Order Number: 146326) 14. Receive and File Meeting Attendance Roster for the Surface Transportation Technical Committee of the North Central Texas Council of Governments Regional Transportation Council - September 2024 through September 2025

Motion to Approve made by Manny Ramirez and seconded by Roderick Miles, Jr. passing 5-0-0-0-0

W. Commissioner Precinct 1

(Court Order Number: 146327) 1. Consideration of a Grant Agreement between Tarrant County and Tarrant County College District to Provide Support Services to Tarrant County Residents

Motion to Approve made by Manny Ramirez and seconded by Roderick Miles, Jr. passing 5-0-0-0-0

(Court Order Number: 146328) 2. Consideration of a Grant Agreement between Tarrant County and COACT to Provide Support Services to Tarrant County Residents

Motion to Approve made by Manny Ramirez and seconded by Roderick Miles, Jr. passing 5-0-0-0-0

(Court Order Number: 146329) 3. Consideration to Assist the City of Forest Hill with the Reconstruction of Brambleton Place, Bowling Green Street, Horton Road, and Twin Oaks Drive to Apply Two Inches of Type D Asphalt and Two Inches of Type B Asphalt

Motion to Approve made by Manny Ramirez and seconded by Roderick Miles, Jr. passing 5-0-0-0-0

(Court Order Number: 146330) 4. Consideration to Assist the City of Fort Worth with the Reconstruction of Four Parking Lots Located at the Fort Worth Water Department Field Operations to Apply Two Inches of Type D Asphalt and Three Inches of Type B Asphalt

Motion to Approve made by Manny Ramirez and seconded by Roderick Miles, Jr. passing 5-0-0-0-0

(Court Order Number: 146331) 5. Consideration to Assist the City of Fort Worth with the Reconstruction of Shelby Road, Camelot Road and Clark Road to Apply Two Inches of Type D Asphalt and Three Inches of Type B Asphalt

Motion to Approve made by Manny Ramirez and seconded by Roderick Miles, Jr. passing 5-0-0-0-0

X. Commissioner Precinct 3

(Court Order Number: 146332) 1. Consideration of Agreements with Various Organizations for the Provision of Transportation Services to the Residents of Tarrant County, Precinct 3

Motion to Approve made by Manny Ramirez and seconded by Roderick Miles, Jr. passing 5-0-0-0-0

(Court Order Number: 146333) 2. Consideration to Assist the City of Keller with the Rehabilitation and Resurfacing of Cheyenne Trail from Cherokee Trail to Navajo Drive, North Pearson Drive from Summer Lane to North City Limits, Willis Lane from Bursey Road to North Tarrant Parkway, Roanoke Road from Knox Road to North City Limits, Judge Bland Road from Florance Road to End of Pavement, Lucian Road from Marvin Road to End of Pavement, Oak Hill Road from Keller Smithfield to End of Pavement, Oak Trail from Roanoke Road to End of Pavement

Motion to Approve made by Manny Ramirez and seconded by Roderick Miles, Jr. passing 5-0-0-0-0

Y. Commissioner Precinct 4

(Court Order Number: 146334) 1. Consideration of a Resolution in Support of the Texas Department of Transportation Constructing State Highway Spur 170 from Intermodal Parkway to State Highway 170

Motion to Approve made by Manny Ramirez and seconded by Roderick Miles, Jr. passing 5-0-0-0-0

(Court Order Number: 146335) 2. Consideration to Assist the City of Fort Worth with the Full Depth Reclamation and Asphalt Overlay of the Will Rogers Memorial Center East Parking Lot

Motion to Approve made by Manny Ramirez and seconded by Roderick Miles, Jr. passing 5-0-0-0-0

(Court Order Number: 146336) 3. Consideration to Assist the City of Haltom City with the Reconstruction and Asphalt Overlay of Old Denton Road

Motion to Approve made by Manny Ramirez and seconded by Roderick Miles, Jr. passing 5-0-0-0-0

(Court Order Number: 146337) 4. Consideration to Assist the City of River Oaks with the Reconstruction and Asphalt Overlay of Castleberry Cut-off Road

Motion to Approve made by Manny Ramirez and seconded by Roderick Miles, Jr. passing 5-0-0-0-0

(Court Order Number: 146338) 5. Consideration to Assist the Tarrant Regional Water District with the Chip Seal of the Northside Parking Lot

Motion to Approve made by Manny Ramirez and seconded by Roderick Miles, Jr. passing 5-0-0-0-0

(Court Order Number: 146339) 6. Consideration to Assist the City of Lakeside with the Asphalt Overlay of the Brooks Baker Avenue approach at Watercress Drive, Asphalt Overlay of Wren Haven Drive, Shoulder-widening of Silver Creek Road and various other roadways, Tiger Mowing Rankin Road and the Wastewater Treatment Plant, and the Street Sweeping of various City Roadways

Motion to Approve made by Manny Ramirez and seconded by Roderick Miles, Jr. passing 5-0-0-0-0

VIII. PUBLIC HEARINGS

IX. REPORTS AND BUSINESS

A. Administrator

(Court Order Number: 146348) 1. Consideration of Out-of-State Travel Requests

Motion to Approve made by Matt Krause and seconded by Manny Ramirez passing 5-0-0-0-0

(Court Order Number: 146349) 2. Consideration of a Resolution Casting Votes for the Election of Tarrant Appraisal District Board of Directors

Motion To Give all of Tarrant County votes for the Election of Tarrant Appraisal District Board of Directors to Mike Alfred made by Matt Krause and seconded by Manny Ramirez passing 3-1-1-0-0 Opposed by Alisa Simmons, Abstain by Roderick Miles, Jr.

B. Elections Administration

(Court Order Number: 146350) 1. Consideration to Canvass the Results of the General Constitutional Amendment Election Held on November 4, 2025

Motion to Approve made by Matt Krause and seconded by Manny Ramirez passing 5-0-0-0-0

Amie Super thanked the court for the opportunity to serve as presiding judge for the past election and would be happy to answer any questions about the ballot board.
Katherine Cano wished to have her comment read regarding the canvass results.

(Court Order Number: 146351) 2. Consideration to Canvass the Results of the Senate District 9 Special Election Held on November 4, 2025

Motion to Approve made by Matt Krause and seconded by Manny Ramirez passing 5-0-0-0-0

Bishop Kirkland spoke about voters and voting locations.

C. Facilities Management

(Court Order Number: 146352) 1. Consideration of a Property Use and Fee Waiver Request from the Tarrant County Historical Commission to Conduct Guided Public Tours of the 1895 Courthouse During the Parade of Lights

Motion to Approve made by Matt Krause and seconded by Manny Ramirez passing 5-0-0-0-0

(Court Order Number: 146353) 2. Consideration of a Property Use and Fee Waiver Request from Tarrant County Precinct One Commissioners Staff and Volunteers to Use the Plaza Building Loading Bay to Decorate their Float for the GM Parade of Lights

Motion to Approve made by Tim O'Hare and seconded by Alisa Simmons passing 5-0-0-0-0

(Court Order Number: 146354) 3. Consideration of a Property Use and Fee Waiver Request from Justice of the Peace, Precinct 2 to Use the Sub courthouse in Arlington to Conduct a Landlord/Tenant Legislative Update Workshop

Motion to Approve made by Alisa Simmons and seconded by Roderick Miles, Jr. passing 5-0-0-0-0

D. Fire Marshal

(Court Order Number: 146355) 1. Consideration to Update the Tarrant County Fire Code for Unincorporated Areas of Tarrant County - 2021 International Fire Code

Motion to Approve made by Matt Krause and seconded by Manny Ramirez passing 5-0-0-0-0

E. Human Resources

(Court Order Number: 146356) 1. Consideration of Changes to the Table of Organization - Community Development

Motion to Approve made by Tim O'Hare and seconded by Matt Krause passing 5-0-0-0-0

F. Purchasing

(Court Order Number: 146357) 1. RFP No. F2025163 - Annual Contract with UpGuard, Inc. for Cybersecurity Services - Information Technology - Per Contract Terms

Motion to Approve made by Tim O'Hare and seconded by Alisa Simmons passing 5-0-0-0-0

(Court Order Number: 146362) 2. Bid No. F2025173 - Annual Contract for Disposable Paper and Plastic Products - Countywide

- Various Vendors - Per Unit Price and Discount from List Price

Motion to Approve made by Tim O'Hare and seconded by Alisa Simmons passing 5-0-0-0-0

(Court Order Number: 146363) 3. RFP No. F2025178 - Annual Contract for Rapid DNA Instrument and Maintenance - Medical Examiner's Office - Life Technologies Corporation - Per Contract Terms

Motion to Approve made by Tim O'Hare and seconded by Alisa Simmons passing 5-0-0-0-0

(Court Order Number: 146364) 4. Bid No. F2025208 - Off-System Bridge Repairs - Transportation Services - Garret Shields Infrastructure, LLC

Motion to Approve made by Tim O'Hare and seconded by Alisa Simmons passing 5-0-0-0-0

(Court Order Number: 146365) 5. Bid No. F2026004 - Annual Contract for Irrigation Supplies, Services, and Repairs - Facilities Management - Various Vendors - Per Hourly Rates

Motion to Approve made by Tim O'Hare and seconded by Alisa Simmons passing 5-0-0-0-0

(Court Order Number: 146366) 6. Bid No. F2026005 - Annual Contract for Locksmith Services and Supplies - Facilities Management - Various Vendors - Per Unit Price, Hourly Rates, and Markup for Parts

Motion to Approve made by Tim O'Hare and seconded by Alisa Simmons passing 5-0-0-0-0

(Court Order Number: 146367) 7. Bid No. F2026008 - Annual Contract for Arbor and Landscape Supplies and Services - Facilities Management - Various Vendors - Per Hourly Rates and Markup for Parts

Motion to Approve made by Tim O'Hare and seconded by Alisa Simmons passing 5-0-0-0-0

(Court Order Number: 146368) 8. RFP No. F2026009 - Annual Contract for Hair Testing Supplies and Laboratory Confirmation Testing Services - Community Supervision and Corrections Department - Various Vendors - Per Contract Terms

Motion to Approve made by Tim O'Hare and seconded by Alisa Simmons passing 5-0-0-0-0

(Court Order Number: 146358) 9. Permission to Take Bids/RFPs

Motion to Approve Permission to take bids/RFPs on items A through V, excluding T and U made by Manny Ramirez and seconded by Matt Krause passing 5-0-0-0-0

G. Tax Assessor-Collector

(Court Order Number: 146359) 1. Consideration of Property Tax Waivers of Penalty and Interest

Motion to Approve made by Matt Krause and seconded by Manny Ramirez passing 5-0-0-0-0

H. County Judge

(Court Order Number: 146360) 1. Consideration of a Resolution Approving Assignment of Private Activity Bond Authority to Texas Department of Housing and Community Affairs; and Containing Other Provisions Relating to the Subject

Motion to Approve made by Tim O'Hare and seconded by Matt Krause passing 5-0-0-0-0

X. APPOINTMENTS TO VARIOUS BOARDS

(Court Order Number: 146369) 1. Action Concerning Appointments to Various Boards, Commissions, Committees, or Tax Increment Finance District Boards

Motion to Approve Appointments of Manny Ramirez to the TIF#3 Downtown Fort Worth, TIF#8 Downtown Lancaster, TIF#9, and Tracey Knight to TIF#15 Stockyards made by Manny Ramirez and seconded by Matt Krause passing 5-0-0-0-0

(Court Order Number: 146370) 1. Action Concerning Appointments to Various Boards, Commissions, Committees, or Tax Increment Finance District Boards

Motion to Approve Appointments of Jamal Williams to TIF#12 and Patrick Winfield to TIF#13 made by Roderick Miles, Jr. and seconded by Matt Krause passing 5-0-0-0-0

XI. APPROVAL OF BONDS AND CERTIFICATES OF SELF-INSURANCE

(Court Order Number: 146361) 1. Consideration of a Certificate of Self-Insurance for Nicholas F. Beggs, Public Probate Administrator, Probate Court No. 2

Motion to Approve made by Tim O'Hare and seconded by Manny Ramirez passing 5-0-0-0-0

XII. BRIEFING

1. Operational Impact of Tarrant County Redistricting

Bishop Kirkland spoke about redistricting.

XIII. PUBLIC COMMENTS

1. PUBLIC COMMENTS

Katherine Godby spoke about depraved indifference.
Harriet Harral invited all to attend people's commissioners court on November 18th at Blanc cowork and studio space.
Elizabeth Miller spoke about people in Tarrant County with various concerns.
Karla Palomares spoke about her disappointment with the court’s decision to close over 100 polling locations.
Amie Super spoke about data and polling sites.
Billy Wilson spoke about oppression.
Joe Palmer spoke about the Republican Liberty Caucus beliefs and shared a story about a friend.

Vicky Goodwin asked the Court to re-evaluate and expand the number of polling locations.
Bishop Kirkland spoke about appointments, boards and Anthony Johnson's jail death and his family.
Nan Terry spoke about Anthony Johnson's jail death and commissioners court agenda items.

XIV. ANNOUNCEMENTS AND COMMENTS

Commissioners Court recessed into Closed Session at 12:35 p.m.

XV. CLOSED MEETING

A. Advice of Counsel

B. Pending or Contemplated Litigation

1. Daryl Grant - CLAIM

2. Freddy Guitierrez - CLAIM

3. Laureano Tamez - CLAIM

4. Ken-Do Contracting, LP v. Tarrant County, Texas, No. 096-371135-25

C. Real Estate Matters

D. Contract Deliberations

E. Personnel Matters

1. Position No. 20000275
2. Position No. 20008036

F. Security and Cybersecurity Related Issues

1. Courthouse Personnel Security Discussion

G. Economic Development Prospects

XVI. COMMISSIONERS COURT RECONVENED

Commissioners Court reconvened at 1:58 p.m.
Honorable Tim O'Hare, County Judge, Presiding
Roderick Miles Jr, Commissioner Precinct 1, Present
Alisa Simmons, Commissioner Precinct 2, Present
Matt Krause, Commissioner Precinct 3, Absent
Manny Ramirez, Commissioner Precinct 4, Absent

XVII. ADJOURNMENT

Commissioners Court was adjourned at 1:58 p.m.

APPROVED BY:_____
Tim O'Hare, County Judge

SUBMITTED BY: Mary Louise Nicholson, County Clerk

BY:_____
April Hanks, Deputy

TARRANT COUNTY
COMMISSIONERS COURT COMMUNICATION

Court Date: December 9, 2025	**Court Order #:**	**Page:** 1 of 1
Department: Auditor	**Prepared By:** Kimberly Buchanan	**Approved By:** Kimberly Buchanan

SUBJECT:

Consideration of Various Claims and Addendum

***** CONSENT AGENDA *****

See Attachment for Additional Information

TARRANT COUNTY
COMMISSIONERS COURT COMMUNICATION

Court Date: December 9, 2025	**Court Order #:**	**Page:** 1 of 1
Department: Administrator	**Prepared By:** Maegan South, Assistant County Administrator	**Approved By:** Maegan South, Assistant County Administrator

SUBJECT:

Consideration of the Issuance of Series 2026 Hospital Revenue Bonds in One or More Series by the Tarrant County Cultural Education Facilities Finance Corporation for Methodist Hospitals of Dallas d/b/a Methodist Health System in an Amount not to Exceed $220,000,000

***** CONSENT AGENDA *****

COMMISSIONERS COURT ACTION REQUESTED

It is requested that the Commissioners Court approve the issuance of Series 2026 Hospital Revenue Bonds by the Tarrant County Cultural Education Facilities Finance Coproration (TCCEFFC) for Methodist Hospitals of Dallas d/b/a Methodist Health System in an amount not to exceeed $220,000,000.00.

BACKGROUND

The Tarrant County Cultural Education Facilities Finance Corporation is a Texas non-profit corporation created under the Texas Cultural Education Facilities Finance Corporation Act. Under the Cultural Facilities Act, not only can bonds be issued for cultural facilities including museums, charter schools and retirement facilities, but can also be used for health facilities. On March 11, 2003, the Commissioners Court, through Court Order #89712, approved the formal creation of the TCCEFFC.

The TCCEFFC Board of Directors adopted a resolution on October 28, 2025 approving the issuance of tax-exempt revenue refunding bonds Series 2026 for Methodist Hospitals of Dallas d/b/a Methodist Health System in an amount not to exceed $220,000,000.00. The proceeds of the Series 2026 Bonds will be used to finance or refinance the acquistion, development, construction, reconstruction, renovation, rehabilitation, and/or equipping of health facilities of the System in the State of Texas (the "Series 2026 Project") and pay certain costs of issuance of the Series 2026 Bonds. Additional details of the use of funds at the hospital facilities are set forth in Exhibit "A" to the attached Notice of Intent to Issue Bonds.

The Notice of Intent to Issue Bonds was filed with the Tarrant County Clerks Office on November 14, 2025. The application fee has been paid to Tarrant County. A public hearing was held on October 31, 2025. The pubic hearing notice and affidavits of publication have been provided.

In order for the bonds to qualify as tax exempt under Section 147(f) of the Internal Revenue Code of 1986, as amended, certain federal and state tax law requirements must be met, including having a governmental entity in which the financed facilities are located approve the issuance of such bonds for the benefit of the borrower.

The District Attorney's Office has reviewed as to form

FISCAL IMPACT

Tarrant County receives a $10,000.00 application fee which is refundable by Tarrant County at any time prior to Commissioners Court approving the issuance of the Bonds. The TCCEFFC will issue the bonds. Tarrant County is not liable for the repayment of the principal or interest associated with these bonds. The bonds expressly provide that neither the assets nor credit of the County have been pledged to support issuance of these bonds. Tarrant County is approving the bonds solely for the purpose of satisfying Section 147(f) of the Internal Revenue Code.

Attachments

TCCEFFC Certificate for Resolution.pdf
Notice of Intent & Exhibit.pdf
Application for Issuance of Revenue Bonds TCCEFFC.pdf
Collin County Certificate; Affidavit of Publication; Notice of Public Hearing.pdf
Certificate of Resolution.pdf
General Certificate of TC.pdf
5.1 Collin County Order (signed).pdf

CERTIFICATE FOR RESOLUTION

THE STATE OF TEXAS §
§
COUNTY OF TARRANT §

The undersigned representative of the Tarrant County Cultural Education Facilities Finance Corporation (the "Issuer") hereby certifies as follows:

1. The Board of Directors of the Issuer convened in a regular meeting on the 28th day of October, 2025 at Fort Worth, Texas, and the roll was called of the duly constituted members of said Board of Directors, to-wit:

Steven R. Purvis, President	Robert M. Lansford, Secretary
Tobi L. Jackson	Alan Barron
Shelli A. Harveson	Kevin Stadler
Vacant	

and all of said persons were present except for [Jackson], thus constituting a quorum. Whereupon, among other business, the written resolution (the "Resolution") bearing the caption

> RESOLUTION OF THE BOARD OF DIRECTORS OF TARRANT COUNTY CULTURAL EDUCATION FACILITIES FINANCE CORPORATION ACCEPTING AN APPLICATION REQUESTING THE ISSUANCE OF ONE OR MORE SERIES OF HOSPITAL REVENUE BONDS; APPROVING, RATIFYING AND CONFIRMING THE TAKING OF CERTAIN PRELIMINARY ACTIONS IN CONNECTION WITH THE ISSUANCE OF SUCH HOSPITAL REVENUE BONDS, INCLUDING APPOINTMENT OF A FINANCING TEAM; AUTHORIZING THE ISSUANCE OF ONE OR MORE SERIES OF HOSPITAL REVENUE BONDS; APPROVING AND AUTHORIZING THE EXECUTION OF FINANCING DOCUMENTS IN CONNECTION WITH THE ISSUANCE OF BONDS; CONFIRMING AND RATIFYING ACTIONS TAKEN IN THE PREPARATION OF PRELIMINARY OFFICIAL STATEMENTS AND OFFICIAL STATEMENTS; AUTHORIZING THE USE AND DISTRIBUTION OF PRELIMINARY OFFICIAL STATEMENTS AND FINAL OFFICIAL STATEMENTS; RESOLVING OTHER MATTERS PERTAINING TO THE ISSUANCE AND SALE OF THE BONDS; AND PROVIDING AN EFFECTIVE DATE

was duly introduced for the consideration of said Board and read in full. It was then duly moved and seconded that said Resolution be adopted; and, after due discussion, said motion, carrying with it the adoption of said Resolution, prevailed and carried by the following vote:

AYES: [5]

NOES: [-]

ABSTENTION: [-]

2. A full copy of the Resolution is attached to this Certificate; the original of the Resolution is on file in the official records of the Governing Body; and the Resolution has not been amended and is in full force and effect.

3. The persons attending the meeting and acting as officers and members of the Governing Body are the duly chosen, qualified, and acting officers and members of said Governing Body as indicated therein; that each of the officers and members of said Governing Body was duly and sufficiently notified officially and personally, in advance, of the time, place and purpose of the aforesaid meeting, and that said Resolution would be introduced and considered for adoption at said meeting.

[Remainder of Page Intentionally Left Blank]

WITNESS MY HAND AND THE OFFICIAL SEAL OF THE ISSUER, THIS 28th DAY OF OCTOBER, 2025.

(SEAL)



By: _____
Tarrant County Cultural
Education Facilities Finance Corporation

RESOLUTION OF THE BOARD OF DIRECTORS OF TARRANT COUNTY CULTURAL EDUCATION FACILITIES FINANCE CORPORATION ACCEPTING AN APPLICATION REQUESTING THE ISSUANCE OF ONE OR MORE SERIES OF HOSPITAL REVENUE BONDS; APPROVING, RATIFYING AND CONFIRMING THE TAKING OF CERTAIN PRELIMINARY ACTIONS IN CONNECTION WITH THE ISSUANCE OF SUCH HOSPITAL REVENUE BONDS, INCLUDING APPOINTMENT OF A FINANCING TEAM; AUTHORIZING THE ISSUANCE OF ONE OR MORE SERIES OF HOSPITAL REVENUE BONDS; APPROVING AND AUTHORIZING THE EXECUTION OF FINANCING DOCUMENTS IN CONNECTION WITH THE ISSUANCE OF BONDS; CONFIRMING AND RATIFYING ACTIONS TAKEN IN THE PREPARATION OF PRELIMINARY OFFICIAL STATEMENTS AND OFFICIAL STATEMENTS; AUTHORIZING THE USE AND DISTRIBUTION OF PRELIMINARY OFFICIAL STATEMENTS AND FINAL OFFICIAL STATEMENTS; RESOLVING OTHER MATTERS PERTAINING TO THE ISSUANCE AND SALE OF THE BONDS; AND PROVIDING AN EFFECTIVE DATE

WHEREAS, by resolution the Commissioners Court (the "Governing Body") of Tarrant County, Texas (the "Sponsoring Entity"), authorized and approved the creation of the Tarrant County Cultural Education Facilities Finance Corporation (the "Issuer"), a Texas nonprofit corporation, pursuant to the provisions of Chapter 337 of the Texas Local Government Code, as amended (the "Act"); and

WHEREAS, the Act authorizes and empowers the Issuer to issue its revenue bonds on behalf of the Sponsoring Entity, to finance and refinance the cost of "health facilities" (as defined in Chapter 221, Texas Health and Safety Code, as amended (the "Health Act")); and

WHEREAS, Methodist Hospitals of Dallas d/b/a Methodist Health System, a Texas nonprofit corporation (the "Hospital"), has filed with the Issuer an Application for Financial Participation (the "Application") and has requested the Issuer to approve the issuance of one or more series of hospital revenue bonds, taxable and tax-exempt, either or both, for benefit of the Hospital, in an aggregate principal amount of not to exceed $220,000,000 (collectively, the "Hospital Revenue Bonds"), the proceeds of which will be loaned to the Hospital to provide funds to (i) finance or refinance the purchase, development, construction, reconstruction, renovation, rehabilitation and/or equipping of health facilities of the Hospital (the "Series 2026 Project") and (ii) pay the costs of issuance of the Hospital Revenue Bonds; and

WHEREAS, the Issuer has determined, based upon representations of the Hospital, that the issuance of the Hospital Revenue Bonds for such purposes will be in furtherance of the public purposes of the Act and the Health Act and will assist in providing, expanding and improving health facilities which will improve the adequacy, cost and accessibility of health care, research and education within the State; and

WHEREAS, the Board of Directors of the Issuer (the "Board") now deems it necessary and desirable to (i) accept the Application and (ii) participate in financing the Project; and

WHEREAS, the Hospital now desires the Issuer to issue Hospital Revenue Bonds (as defined below, the "Series 2026 Bonds") for the purpose of providing funds to (i) finance or refinance the Series 2026 Project, and (ii) pay the costs of issuing the Series 2026 Bonds; and

WHEREAS, Section 147(f) of the Internal Revenue Code of 1986, as amended (the "Code"), requires that the Hospital Revenue Bonds and the Project be approved by the "applicable elected representative" (the "AER") of each county in which any portion of the proceeds of tax-exempt bonds will be spent, after a public hearing following reasonable public notice thereof; and

WHEREAS, the Board has previously approved and authorized that a notice of public hearing relating to issuance of one or more series of Hospital Revenue Bonds, in an aggregate principal amount of not to exceed $220,000,000, for the benefit of the Hospital be and has been published in the Dallas Morning News in accordance with the requirements of the Code, and that the required public hearing with respect to the Hospital Revenue Bonds and the Series 2026 Project to be financed with the proceeds thereof will be held on October 31, 2025, and will be conducted by Shelby Harden, as hearing officer, and such publication of notice of public hearing and the conduct of such hearing by Shelby Harden, as hearing officer, has been approved and ratified and is further hereby ratified and confirmed; and

WHEREAS, the proceeds of the Series 2026 Bonds will be spent within Collin County and the AER is the County Judge or the Commissioners Court of the Sponsoring Entity or the Governing Body thereof; and

WHEREAS, the Commissioners Court for Collin County, acting in its capacity as AER, will be requested to grant its approval with respect to the Series 2026 Bonds and the Series 2026 Project, as required by the Code; and

WHEREAS, the Board now deems it necessary and desirable to authorize and direct the officers of the Issuer to transmit to the Governing Body, in accordance with the provisions of Section 221.062 of the Health Act, a notice of intent (the "Notice of Intent") relating to the Series 2026 Bonds, in the substantially final form presented at this meeting, with such changes as may be approved by Bond Counsel and the President of this Board; and

WHEREAS, the Board understands that the underwriters named in paragraph 8 below (the "Underwriters") intend to distribute preliminary official statements and official statements in connection with the offering and sale of the Series 2026 Bonds; and

WHEREAS, in connection with the preparation of such preliminary official statements and official statements (collectively, the "Official Statement"), the Issuer has furnished to the Underwriters certain information concerning the Issuer set forth in the official statements under the captions "Introductory Statement," "The Issuer" and "Litigation-The Issuer," and the Board now desires to authorize the use of such information in such Official Statements; and

WHEREAS, for purposes of providing funds required to finance and refinance the cost of the Series 2026 Project, the Issuer now desires to (a) authorize the issuance of the Series 2026 Bonds in a maximum aggregate principal amount of not to exceed $220,000,000, pursuant to the terms and provisions of one or more trust indentures; (b) authorize the sale of the Series 2026

Bonds to the Underwriters pursuant to one or more contracts of purchase and letters of representation and indemnification with respect to the Series 2026 Bonds and to approve the execution and delivery of such contracts of purchase and letters of representations; (c) authorize the preparation, distribution and execution of one or more preliminary official statements and official statements, as applicable, with respect to the Series 2026 Bonds; (d) provide for the payment of the principal of, premium, if any, and interest on the Series 2026 Bonds with revenues derived from the loan of proceeds of the sale of the Series 2026 Bonds pursuant to the terms and provisions of one or more loan agreements; and (e) take and authorize certain other actions in connection with the foregoing; and

WHEREAS, the Board has been presented with and examined proposed forms of a bond trust indenture, a loan agreement, a contract of purchase and a letter of representation and indemnification, and the Board finds that the form and substance of such documents presented herewith are satisfactory and the recitals and findings contained therein are true, correct and complete, and hereby adopts and incorporates by reference such recitals and findings as if set forth in full in this Resolution, and finds that it is in the best interest of the public and the Issuer and assists in carrying out the public purpose of the Issuer and of the Act and the Health Act to authorize the execution and delivery of such documents; and

WHEREAS, this Board desires to approve the appointment of certain professionals (the "Financing Team") to accomplish the issuance, sale and marketing of the Series 2026 Bonds;

NOW, THEREFORE, BE IT RESOLVED BY THE BOARD OF DIRECTORS OF THE TARRANT COUNTY CULTURAL EDUCATION FACILITIES FINANCE CORPORATION THAT:

1. Findings and Determinations. All of the above recitals are found and determined to be true and correct and are incorporated into the body of this Resolution as if repeated in their entirety.

2. Notice of Intent. The Board hereby finds and directs that at least 15 days before the issuance of any portion of the Series 2026 Bonds, the Notice of Intent will be filed with the Sponsoring Entity, and that a description of the Series 2026 Project, including an explanation of the necessity for, and the names of the proposed users of, the Series 2026 Project is set forth in such notice. Each of the President, the Vice President, the Secretary or any Assistant Secretary of the Board are hereby severally authorized and directed to transmit to the Governing Body the Notice of Intent, substantially in the form presented at this meeting, with such changes as may be approved by the President or Vice President of this Board and Bond Counsel, as soon as practical but in no event later than the 15th day before the date of issuance of any portion of the Series 2026 Bonds.

3. Authorization of Issuance of the Series 2026 Bonds and Approval of a Bond Indentures. The Issuer hereby authorizes and directs the issuance of the Hospital Revenue Bonds, to be issued in one or more series or subseries, in the maximum aggregate principal amount of not to exceed $220,000,000, in accordance with one or more trust indentures (collectively, the "Trust Indentures"), dated as of February 1, 2026 (or such other date as set forth therein), between the Issuer and The Bank of New York Mellon Trust Company, National

Association, as trustee (the "Trustee"). The proposed Trust Indentures, having been submitted to the Board, the terms, form and provisions of the Trust Indentures and the Series 2026 Bonds are hereby authorized and approved, and the President or the Vice President of the Board are hereby severally authorized and directed to execute and deliver such Trust Indentures, in the name and on behalf of the Issuer. The Secretary or any Assistant Secretary of the Issuer are hereby severally authorized to attest and affix the Issuer's seal to the Series 2026 Bonds, with such changes therein as the officer executing the same may approve, such approval to be conclusively evidenced by such officer's execution thereof.

4. Approval of Loan of Bond Proceeds; Loan Agreements. The loan of the proceeds of the sale of the Series 2026 Bonds by the Issuer to the Hospital in order to provide funds to finance the Series 2026 Project shall be effected pursuant to the terms and provisions of one or more loan agreements, dated as of February 1, 2026 (or such other date as set forth therein) (the "Loan Agreements"), between the Issuer and the Hospital, in substantially the form presented to the Board herewith and its counsel, the form, terms and provisions of such Loan Agreements being hereby authorized and approved. The President or the Vice President of the Issuer are hereby severally authorized and directed to execute and deliver the Loan Agreements on behalf of the Issuer, with such changes therein as the officer executing the same may approve, such approval to be conclusively evidenced by such officer's execution thereof.

5. Approval of Sale of Bonds to Underwriters; Approval of Contracts of Purchase. The sale and delivery of the Series 2026 Bonds by the Issuer to Underwriters, at the prices set forth in the contracts of purchase referred to below, are hereby authorized and approved. Said sale and delivery of the Series 2026 Bonds shall be effected in accordance with the terms and provisions of one or more contracts of purchase, substantially in the form of the Contract of Purchase presented today (collectively the "Contracts of Purchase" and each a "Contract of Purchase"), each to be dated as of the date of its execution and delivery, by and among the Issuer and the Underwriters and acknowledged and approved by the Hospital, a draft of which was presented to the Board and its counsel, the form, terms and provisions of such Contracts of Purchase being hereby authorized and approved. The President and the Vice President of the Issuer are hereby severally authorized and directed to execute and deliver such Contracts of Purchase on behalf of the Issuer, with such changes therein as the officer executing the same may approve, such approval to be conclusively evidenced by such officer's execution thereof. In connection with the execution and delivery of the Contracts of Purchase by the Issuer and the Underwriters, the Hospital is to execute and deliver one or more letters of representations and indemnification substantially in the form of the Letter of Representations and Indemnification (each a "Letter of Representation") attached to the applicable Contract of Purchase as an exhibit, the form, terms and provisions of such Letter of Representation being hereby authorized and approved, and the President and the Vice President of the Issuer are hereby severally authorized and directed to execute and deliver such Letter of Representation on behalf of the Issuer, with such changes therein as the officer executing such Letter of Representation may approve, such approval to be evidenced by such officer's execution thereof.

6. Terms of Series 2026 Bonds; Pricing Committee. The Underwriters and the Issuer are hereby authorized to complete each Contract of Purchase to set forth the principal amounts, interest rates and prices or yields for each maturity of the Series 2026 Bonds, subject to the limitations that: (i) the Contract of Purchase as completed shall be approved by the officers

executing the Contract of Purchase, such approval to be conclusively evidenced by their execution thereof; (ii) the aggregate principal amount of the Series 2026 Bonds shall not exceed $220,000,000; and (iii) the "net interest cost" with respect to the Series 2026 Bonds shall not exceed the "net interest cost" permitted by the Health Act. Any two directors are hereby designated to act as a committee of the Board (the "Pricing Committee") pursuant to the provisions of Section 221.028(a) of the Act and Section 2.13 of the Bylaws of the Issuer for the purposes of approving the purchase price, interest rates, maturities, and redemption provisions, and the approval of the Pricing Committee of such items shall be conclusively evidenced by the execution of the Trust Indentures, the Loan Agreements and the Contracts of Purchase by the officers of the Issuer.

7. Official Statements. The Board hereby authorizes the use and distribution of the information described in the thirteenth recital of this Resolution in the preliminary official statements and the official statements prepared with respect to the Series 2026 Bonds (collectively, the "Official Statement"); provided that, in adopting this Resolution, the Issuer hereby disclaims any responsibility for the Official Statement except for the information described as having been provided by it in the thirteenth recital of this Resolution and expressly disclaims any responsibility for any other information included as part of the Official Statement.

8. Approval of Financing Team. The Board hereby approves the appointment of the following firms and entities as the Financing Team to accomplish the issuance, sale and marketing of the Series 2026 Bonds: (i) Hilltop Securities, Inc., as senior managing underwriter and representing such other firms as may be approved for inclusion in the underwriting syndicate from time to time (collectively, the "Underwriters"); and (ii) Bracewell LLP, as Bond Counsel.

9. Ratification and Confirmation of Prior Actions. The actions taken by Bond Counsel to publish the notice of public hearing with respect to the requirements of the public approval requirements of the Code, the selection of Shelby Harden as hearing officer and the scheduling and holding of the public hearing are hereby approved, authorized, ratified and confirmed.

10. Conditions Precedent. The actions and obligations authorized in this Resolution shall be subject to and conditioned upon the receipt by the Issuer, on the date of initial delivery of the Series 2026 Bonds against payment therefor (the "Closing Date"), of (i) a certificate of a duly authorized officer of the Hospital substantially to the effect that each of the representations and warranties in the applicable Contract of Purchase is true, accurate and complete on the Closing Date as if made on and as of the Closing Date, and that all obligations of the Hospital to be performed by it at or prior to the Closing Date have been duly performed; (ii) the purchase price for the Series 2026 Bonds; (iii) evidence satisfactory to Bond Counsel of AER approval of the Series 2026 Bonds and the Series 2026 Project; and (iv) such opinions, evidences, certificates, instruments or other documents as shall be requested by the Issuer's Counsel or by Bond Counsel, to evidence due performance or satisfaction by the Hospital at or prior to such time of all agreements then to be performed and all conditions then to be satisfied by it.

11. Authorization to Perform Necessary Acts. The officers, employees and agents of the Issuer, and each of them, shall be and each is expressly authorized, empowered and directed from time to time to do and perform all acts and things and to execute, acknowledge and deliver

in the name and under the corporate seal, if applicable, and on behalf of the Issuer all certificates, financing statements, termination statements, instruments and other papers, whether or not herein mentioned, as they may determine to be necessary or desirable in order to carry out the terms and provisions of this resolution and of the Series 2026 Bonds to be issued hereunder, as well as the terms and provisions of the Contracts of Purchase hereby authorized and approved, such determination to be conclusively evidenced by the performance of such acts and things and the execution of any such certificate, financing statement, instrument or other paper.

12. Authorization to File Form 8038. The Board authorizes and directs that an officer of the Issuer submit to the Secretary of the Treasury, not later than the 15th day of the second calendar month after the close of the calendar quarter in which any of the Series 2026 Bonds are issued (or on such other dates as shall be required in the opinion of Bond Counsel so that interest on the Series 2026 Bonds shall not be includable in gross income for federal income tax purposes), a statement or statements containing the information required by Section 149(e) of the Code.

13. Affirmative Findings. Based upon representations made by the Hospital to the Board, the Board hereby affirmatively finds that:

(a) the Series 2026 Project is required, necessary or convenient for health care, research and education, one or more, within the State of Texas, will aid in the provision, expansion and improvement of health facilities, and the issuance of the Series 2026 Bonds are in furtherance of the public purposes of the Act and will promote the health and welfare of the citizens of the State of Texas; and

(b) all notices, approvals or consents required by the Act for the issuance of the Series 2026 Bonds have been given or obtained.

14. Effective Date. This Resolution shall be in full force and effect from and after its passage, and it is accordingly so resolved.

PASSED AND APPROVED THIS 28th DAY OF OCTOBER, 2025.

BOARD OF DIRECTORS
TARRANT COUNTY CULTURAL
EDUCATION FACILITIES FINANCE
CORPORATION

TARRANT COUNTY CULTURAL EDUCATION FACILITIES FINANCE CORPORATION

Filed
Tarrant County Clerk
10:27 am, Nov 14 2025
Mary Louise Nicholson
County Clerk
by LMWillis

201 MAIN STREET, SUITE 700
FORT WORTH, TEXAS 76102

DIRECTORS
STEVEN R. PURVIS, PRESIDENT
ROBERT M. LANSFORD, SECRETARY
ALAN BARRON
TOBI L. JACKSON
SHELLI A. HARVESON
KEVIN STADLER

RANDAL L. DEAN
SECRETARY OF THE BOARD

NOTICE OF INTENT TO ISSUE BONDS AND PROVIDING CERTAIN INFORMATION RELATING THERETO

TO: THE COMMISSIONERS COURT OF TARRANT COUNTY, TEXAS

TARRANT COUNTY CULTURAL EDUCATION FACILITIES FINANCE CORPORATION (the "Issuer"), in accordance with the provisions of Section 221.062 of Chapter 221 of the Texas Health and Safety Code, as amended (the "Act"), hereby submits the following information:

1. The Issuer proposes to issue not more than $220,000,000 in aggregate principal amount of its Hospital Revenue Bonds (Methodist Hospitals of Dallas) (the "Series 2026 Bonds") in one or more series, in an amount which will provide the funds, after payment of certain costs relating to the issuance of the Series 2026 Bonds, to finance or refinance the purchase, development, construction, reconstruction, renovation, rehabilitation, and/or equipping of health facilities of Methodist Hospitals of Dallas d/b/a Methodist Health System, a Texas nonprofit corporation (the "System"), described on Exhibit A hereto (the "Series 2026 Project").

2. The System, or an affiliated tax-exempt corporation controlled, directly or indirectly, by the System, is the user of the health facilities financed with all or a portion of the Series 2026 Bonds. Constructing and equipping the Series 2026 Project is necessary to the continued provision of quality healthcare by the System.

IN WITNESS WHEREOF, the signature of an authorized officer of the Issuer is set forth as of this 14th day of November, 2025.

TARRANT COUNTY CULTURAL EDUCATION FACILITIES FINANCE CORPORATION

By: _____
Title: BOARD SECRETARY

Filed
Tarrant County Clerk
10:27 am, Nov 14 2025
Mary Louise Nicholson
County Clerk
by LMWillis

EXHIBIT A

DESCRIPTION OF HEALTH FACILITIES
SERIES 2026 PROJECT

The proceeds of the Series 2026 Bonds will be used to: (i) finance or refinance the purchase, development, construction, reconstruction, renovation, rehabilitation, and/or equipping of health facilities of the System (collectively, the "Series 2026 Project"), and (ii) pay the costs of issuance of the Series 2026 Bonds.

The new money portion of the transaction will be used for the construction, renovation and expansion of hospital facilities and the acquisition and installation of capital equipment at:

	Cost Not to Exceed
Collin County:	
Methodist Celina Medical Center 1500 S Dallas Pkwy Celina, Texas	$210,000,000
Methodist Richardson Medical Center 2831 E President George Bush Hwy Richardson, Texas	$25,000,000

Need and Justification for Issuance of Series 2026 Bonds

The System provides valuable healthcare services to the residents of North Central Texas. The Series 2026 Project will enable the System to expand its facilities to provide additional specialized services and to expand current services to provide improved and more cost-effective healthcare.

The Series 2026 Project is necessary to promote and develop healthcare, research and education for the public purpose of promoting health and welfare of the citizens of Texas, and improving the adequacy, cost and accessibility of healthcare, research and education in Texas.

APPLICATION FOR ISSUANCE OF REVENUE BONDS
BY
TARRANT COUNTY CULTURAL EDUCATION FACILITIES
FINANCE CORPORATION

WHEREAS, the Tarrant County Cultural Education Facilities Finance Corporation (a Texas non-profit corporation) (the "Issuer") was created by Tarrant County, Texas (the "County") pursuant to the Cultural Education Facilities Finance Corporation Act, 337 Local Government Code (the "Act"); and

WHEREAS, the Issuer is authorized by the Act to issue, sell, and deliver its revenue bonds (the "Bonds") for the purpose of paying the cost of facilities, as described in the Act; and

WHEREAS, the County requires all Applicants to pay a $10,000.00 application fee, WHICH IS REFUNDABLE by the County at the request of the Applicant at any time prior to Commissioners Court approving the issuance of the Bonds.

Methodist Hospitals of Dallas d/b/a Methodist Health System

Name of Applicant

1441 North Beckley Avenue, Dallas, Texas 75203

Address

Robert Milone, (214) 947-6405

Name of Contact and Telephone Number

$220,000,000 (maximum par amount)

Proposed Amount of Bonds

Applicant agrees to indemnify and hold harmless the Issuer and its Officers and Directors against all losses, costs, damages, expenses, and liabilities of whatsoever nature (including, but not limited to, attorney's fees, litigation, and court costs, amounts paid in settlement and amounts paid to discharge judgments) incurred by or asserted against any such indemnified party directly or indirectly resulting from, arising out of, or relating to the issuance, offering, sale, or delivery of the Bonds, or the design, construction, installation, operation, use, occupancy, maintenance or ownership of Applicant's project, whether or not any such indemnified party is alleged or found to have been negligent in connection therewith.

DATED this 28th day of October, 2025.

The $10,000.00 check should be made payable to Tarrant County, Texas.

Mail the checks and Application to:

Randal L. Dean, Secretary
Tarrant County Cultural Education Finance Facilities Corporation
201 Main Street, Suite 801
Fort Worth, TX 76102

MINUTES OF SPECIAL MEETING OF THE BOARD OF DIRECTORS
OF
TARRANT COUNTY CULTURAL EDUCATION FACILITIES
FINANCE CORPORATION

October 28, 2025

A Special Meeting of the Board of Directors of the Tarrant County Cultural Education Facilities Finance Corporation was held on Tuesday, October 28, 2025, at 12:00 p.m., pursuant to proper notice to all Board Members, regarding the Methodist Hospitals of Dallas and Baylor Scott & White Health bond applications.

Board members in attendance were:

Steven Purvis
Alan Barron
Shelli Harveson
Kevin Stadtler
Robert Lansford

Also, in attendance were Matt McCabe and Shelby Hardin, Bond Counsel and Randal L. Dean, Issuer Counsel.

Mr. Dean provided the proposed Resolution and supporting documents regarding the Methodist Hospitals of Dallas and Baylor Scott & White Health bond applications for review by the Board Members.

Bond Counsel for applicants and Mr. Dean explained the proposed Methodist Hospitals of Dallas and Baylor Scott & White Health bond applications and answered questions about the issuance and use of the funds from Board Members. After discussion, on motion of and seconded by Alan Barron the Resolution for Methodist Hospitals of Dallas was unanimously APPROVED. After discussion, on motion of Robert Lansford and seconded by Kevin Stadler the Resolution for Baylor Scott & White Health was unanimously APPROVED.

There being no further business, the meeting adjourned at 1:30 p.m.

Randal L. Dean, Board Secretary

APPROVAL OF
THE COUNTY JUDGE OF COLLIN COUNTY, TEXAS
IN RESPECT TO SECTION 147(f) OF THE INTERNAL REVENUE CODE

Tarrant County Cultural Education Facilities Finance Corporation
Hospital Revenue Bonds (Methodist Hospitals of Dallas) Series 2026

Solely for the purposes of meeting the requirements of section 147(f) of the Internal Revenue Code of 1986, as amended (the "Code"), the undersigned County Judge of Collin County, Texas (the "County") hereby approves the issuance of the above-described obligations (the "Bonds") and the facilities to be financed thereby. Such approval is based upon the Certificate of Public Hearing Officer, attached hereto as **Exhibit A**.

This approval is not to be construed as (i) a representation or warranty by the County or the undersigned that the Bonds will be paid or that any obligations assumed by any of the parties will, in fact, be performed, (ii) a pledge of the faith and credit of or by the County; further, the fact that the undersigned has approved the Bonds as required by the Code may not, in any event, be used as a sales device with respect to the Bonds, or (iii) this approval shall not be construed as a representation or warranty by the County concerning the validity of the Bonds.

EXECUTED as of the _____ day of _____, 2025.

_____
County Judge
Collin County, Texas

State of Texas	**§**	**Court Order**
Collin County	**§**	**2025-xxx-11-17**
Commissioners Court	**§**	

An order of the Collin County Commissioners Court acknowledging the issuance of a loan.

In accordance with the Internal Revenue Code section 147(f), the Collin County Commissioners Court hereby acknowledges the issuance of a loan facilitated by Tarrant County Cultural Education Facilities Corporation Hospital Revenue Bonds (Methodist Hospitals of Dallas) Series 2026, and related matters.

A motion was made, seconded, and carried by a majority of the court members in attendance during a regular session on Monday, November 17, 2025.

Chris Hill, County Judge

Darrell Hale, Commissioner, Pct 3



Susan Fletcher, Commissioner, Pct 1

Duncan Webb, Commissioner, Pct 4

Cheryl Williams, Commissioner, Pct 2

ATTEST: Stacey Kemp, County Clerk

EXHIBIT A

CERTIFICATE OF PUBLIC HEARING OFFICER

[See attached]

CERTIFICATE OF PUBLIC HEARING OFFICER
REGARDING PUBLIC HEARING (INTERNAL REVENUE CODE § 147(f))

Re: Tarrant County Cultural Education Facilities Finance Corporation Hospital Revenue Bonds (Methodist Hospitals of Dallas) Series 2026 in one or more series (the "Bonds")

I, the undersigned, do hereby make and execute this certificate for the benefit of all persons interested in the reissuance for federal tax purposes of the above-captioned Bonds.

I hereby certify as follows:

1. I am the duly appointed hearing officer for the public hearing which was held in connection with the issuance of the Bonds at the time and place indicated in the Notice of Public Hearing attached hereto as **Schedule 1**.

2. The Notice of Public Hearing was published no less than seven days before the date of the public hearing, as evidenced by the Affidavit of Publication of the Notice of Public Hearing attached hereto as **Schedule 1**.

3. All persons (if any) appearing at the public hearing were given an opportunity to comment on the proposed issuance of the Bonds. No such persons appeared or made comments except as set forth on **Schedule 2** attached hereto.

4. After giving all interested persons an opportunity to appear and comment, the public hearing was declared closed.

WITNESS MY HAND as of the 31th day of October, 2025.

Shelby A. Harden
Hearing Officer

Schedule 1 - Affidavit of Publication of the Notice of Public Hearing (with Attached Notice of Public Hearing)
Schedule 2 - Names and Comments of Persons Attending Public Hearing

Schedule 1
to Exhibit A

AFFIDAVIT OF PUBLICATION WITH ATTACHED NOTICE OF PUBLIC HEARING

The Dallas Morning News

AFFIDAVIT OF PUBLICATION

STATE OF TEXAS

COUNTY OF DALLAS

Before me, a Notary Public in and for Dallas County, this day personally appeared David Ferster, Advertising Representative for *THE DALLAS MORNING NEWS* being duly sworn by oath, states the attached advertisement of: **Ad#** 19293

BRACEWELL LLP

Appeared in *The Dallas Morning News* on October 24, 2025

Dallas Morning News Sales Operations

Sworn to and subscribed before me this Date: 10.24.2025

DANIEL NAVARRO
Notary Public, State of Texas
Comm. Expires 03-22-2028
Notary ID 134822067

Notary Public, State of Texas

Classified Marketplace

One of the most trusted brands in North Texas.

Get started today at **dallasnews.com/classifieds** or call **214.745.8123.**

ANNOUNCEMENTS

- Adoptions
- Found Items
- Hunting/Fishing Leases
- Lost Items
- Notices - Business
- Notices - Personal
- Resorts, Camps, Travel
- Reunions
- Seminars
- Ski Directory
- Sports/Club Memberships

Notices - Personal

UNIDENTIFIED TEENAGE HOMICIDE VICTIM



Discovered On February 10 - 2010. In Barstow, CA. Gender: Female. Age: 14-19. Race: White - Latina. Brown Hair, Brown Eyes, & Pierced Ears. Call: 1-800-843-5678. Case Number: 1141616

AUTOMOTIVE

- Autos
- Commercial Vehicles
- Pickups
- SUVs
- Trailers
- Vans

Acura



2020 Acura MDX 4Dr SUV 3.5 L V6 24K mls. Auto 3WD White Exterior with black leather interior. CD AC Clean car title. Sunnyvale TX 214-636-9519

Antiques, Classics, Special Interest



1972 VW BUS TYPE 2 Luxpeco Rack 7K miles new engine 12K OBO Owned for 45 years with one owner before that California Bus AUST SELL. OWNER PASSED zip:76548 940.642.5235

Honda



2021 Honda Pilot EX-L 4D SUV 3.5 L 6 Cyl Auto 126K mi White Ext with black leather Int Clean car, title. Cool AC Sunnyvale TX 214-636-9519.

Want to Buy



CASH FOR YOUR HOUSE
Any Condition
Any price.
Call Jim 972-898-5740

BILLBUYSHOUSES.com
Trusted Texan Buying Houses "as is" Since 1991



Prompt Cash Offer
Bill Pays Closing Costs
Sell Quick Without Repairs
Bill Jackson
Real Estate Broker
214.478.8979

Want to Buy



Best Cash Offer For Your House!
Turn Your Unwanted House Into Cash
HOUSE HUNTERS of Dallas.com
30 Years Buying Homes in DFW Metroplex
$$ More Money For You $$
CALL NOW
214-906-2291
• No Repairs
• No Commissions
• No Closing Costs
Just Quick Cash! 7 Day Closings!
We Buy Houses In Any Condition Or Location
Eileen Petruski
Licensed Realtor

Motorcycles & Mopeds

Vintage 1973 Triumph motorcycle, T97 $5oo.oo, B+ condition, $6,300 phone David 409.414.3005

Swap Meets and Shows

Fall Conroe Swap Meet & Car Corral Oct. 24 - Oct. 26 Montgomery Cty Fairgrounds Over 600 Vendors! Open 8 am Spectators Free Parking 337-349-7667 Hotrodsoftexas.com

HOMECENTER FOR RENT

- Acreage, Farms and Ranches
- Commercial Real Estate
- Lake & Vacation Property
- Dallas Rentals
- Metroplex Rentals
- Out of Metroplex Rentals
- Miscellaneous Rentals

Acreage, Farms & Ranches

NOTICE
Residential rental locators are required to be licensed by the TX Real Estate Commission, Austin 800-250-8732 Locators may advertise apartment units in general terms & all units may not have the same features. The amount of rent quoted in an ad may be the starting rent for a basic unit which does not have all advertised features.

North Dallas

FREE RENT! 469-250-6453

HOMECENTER FOR SALE

- Acreage, Farms and Ranches
- Commercial Real Estate
- Lake & Vacation Property
- Dallas Sales
- Metroplex Sales
- Out of Metroplex Sales
- Miscellaneous Sales

Acreage, Farms & Ranches

Equal Housing Opportunity

Real estate advertised in this newspaper is subject to the amended Federal Fair Housing Act of 1968, which makes it illegal to advertise any preference, limitations or discrimination based on race, color, religion, sex, handicap , familial status or national origin or intension to make such preference, limitation or discrimination. This newspaper will not knowingly accept any advertising for real estate which is in violation of the law. For complaints call the Fair Housing Office in your city or (HUD 800-669-9777)

Want to Buy

Make some money from your sell your Buy and sell with locals.
214.745.8123
dallasnews.com/classifieds

Acreage - Out of Metroplex East

106 Acres Red River County $10K /acre and 16 acres Red River Co. $13K /acre Call 915-422-1746

53 Acres Ranch, Coleman County, $239,000 Borosilo, 4 bdrms, barn, Oil drilling exist. mountainlake555@aol.com





Beautiful 40 Acre Hill Country Ranch 30 miles S/W of DFW in Glen Rose. Hardwood Trees with rock bottom creek and great views. Paved frontage on two sides. water and electric on property. Great family ranch or development potential. By owner 817-219-7436

Beautiful building site. N. of Necessities, TX. Spring fed creek, tall trees, paved CR, lots of wild life. Central Heights school district, Cash $55,000 936.556.0940

Cedar Hill

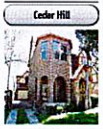

Will Buy Rate Down Oct! Walk to: Joe Pool Lake, beach, C.H. state park, downtown and hillside village shops. DTN Dallas 30min. DFW 30min. 4/3/2 gated drive. Tudor neighborhood. Trees. hardwood floors. Was $575K Now $499K 304 Phillis Dr, pics on realtor.com broker phone 972-399-6080 Up to 100% Financing.

Park Cities



4206 WOODFIN DR. $6,895,000 - 9981 sf Transitional French Masterpiece on .75acre Preston Hollow Estates. Timeless elegance & Top-shelf EVERYTHING- Bill Davidson 972-713-6006 billd@bdcommercial realty.com

Make some money from your sell your Buy and sell with locals.
214.745.8123
dallasnews.com/classifieds

Bids & Proposals

NTTA
NORTH TEXAS TOLLWAY AUTHORITY
RFB 06253-NTT-00-GS-MA
Automotive and Equipment Tires

Project Description: Purchase of tires for NTTA vehicles and equipment.

NTTA is accepting bids until 11/7/2025 at 11:00 a.m. CT.

Vendors can register, download full project details and documents, submit questions and upload bids to NTTA's Marketplace (https://www.nttamarketplace.org).

Email bidpurchasing@ntta.org for questions on registration or use of website.

NTTA
NORTH TEXAS TOLLWAY AUTHORITY
RFB 06220-NTT-00-GS-MA
Electrical Supplies

Project Description: Purchase and delivery of common electrical supplies used by in-house maintenance and repairs.

NTTA is accepting bids until 11/7/2025 at 11:00 a.m. CT.

Vendors can register, download full project details and documents, submit questions and upload bids to NTTA's Marketplace (https://www.nttamarketplace.org).

Email bidpurchasing@ntta.org for questions on registration or use of website.

NTTA
NORTH TEXAS TOLLWAY AUTHORITY
RFB 06106-PGB-08-CN-PD
PGBT Segment 8 Wall Stabilization

Project Description: stabilization of existing MSE retaining walls on PGBT, ditch grading, inlet adjustment, removal & replacement of riprap, mow strips, small signs, and pavement markings.

The North Texas Tollway Authority (NTTA) is accepting bids for the above mentioned solicitation until 11/20/2025 at 11:00 a.m. CT. Bidders are encouraged to upload their bids to NTTA's Marketplace (https://www.nttamarketplace.org). Bids will be read at a virtual bid opening meeting on 11/20/2025 at 3:00 p.m. CT. See RFB documents for meeting details.

A virtual pre-bid conference will be held on 11/11/2025 at 10:00 a.m. CT. See RFB documents for meeting details.

Email bidpurchasing@ntta.org for questions on registration or use of website.

Bids & Proposals

POST365-9918/DOC#1192648
CITY OF DALLAS CONSTRUCTION ADVERTISEMENT REQUEST FOR COMPETITIVE SEALED PROPOSALS

Competitive Sealed Proposals are required to be submitted electronically via the City of Dallas' solicitation website at https://dallascityhall.bonfirehub.com by 1:00 PM on Fridays. Proposals will be publicly read at 2:00 PM on Fridays and can be viewed on the City of Dallas' website at(https://dallastx.sweagit.com/bid purchasing). All required documents and project specifications may be obtained from the Bonfire link above. Submittals will not be accepted after the due date/time (see below) and hard copy submittals are not permissible.

CIZ25-AV1-3198 – REQUEST FOR COMPETITIVE SEALED PROPOSALS FOR RAMP SUPPORT SYSTEM FOR ORDER CONTRACT

The Dallas Airport System is accepting Competitive Sealed Proposals ("Best Value" for a Job Order Contract from firms interested in providing maintenance, repair, alteration, renovation, remediation, or minor construction of city facilities. This is pursuant to Texas Local Government Code, Section 2269.403, and in accordance with the terms, conditions, and requirements set forth in this Solicitation, which considers other factors in addition to price. This Request for Competitive Sealed Proposals (RFCSP) provides sufficient information for interested parties to prepare and submit proposals for consideration by the City of Dallas Department of Aviation.

There will be a pre-proposal meeting on Wednesday, November 5, 2025, at 1:00 pm (CDT) at Dallas Love Field Pirtle Duck Conference Center, Room Aloha, 8008 Herb Kelleher Way, Dallas, TX 75235. General contractors are welcome to bring key subs. A site visit will not be conducted.

The RFCSP packet may be obtained beginning October 17, 2025, from the City of Dallas' solicitation website (linked above) and all addendums will be posted to this site.

Questions Due Date/Time: Wednesday, November 12, 2025, at 1:00 PM
Solicitation Due Date/Time: Friday, November 21, 2025, at 1:00 PM
Open/Reading Date/Time: Friday, November 21, 2025, at 2:00 PM

NTTA
NORTH TEXAS TOLLWAY AUTHORITY
RFB 08599-DNT-61-CN-PD
DNT Segment 1 Southbound Pavement Rehabilitation

Project Description: Pavement rehabilitation on the Dallas North Tollway (DNT) southbound lanes from Harry Hines Blvd to IH-635. Work includes milling of existing overlay, sealing of joints in underlying pavement, application of seal coat, new asphalt overlay, removal of traffic drains, installation of valley gutters, work zone pavement markings, pavement markings, and top sealing of asphalt shoulders.

The North Texas Tollway Authority (NTTA) is accepting bids for the above mentioned solicitation until 11/20/2025 at 11:00 a.m. CT. Bidders are encouraged to upload their bids to NTTA's Marketplace (https://www.nttamarketplace.org). Bids will be read at a virtual bid opening meeting on 11/20/2025 at 3:00 p.m. CT. See RFB documents for meeting details.

A virtual pre-bid conference will be held on 11/10/2025 at 2:00 p.m. CT. See RFB documents for meeting details.

Email bidpurchasing@ntta.org for questions on registration or use of website.

NTTA
NORTH TEXAS TOLLWAY AUTHORITY
RFB 06313-PGB-08-CN-PD
PGBT Sec 1-3 Pavement Marking Replacement

Project Description: Pavement marking installation on PGBT. Retrace edge lines and skips with 48 mil thermo and add new shadow striping with 100 mil thermo from IH-35E to DNT. Retrace edge lines with 60 mil thermo and add new shadow striping with 100 mil thermo from DNT to Plano Road. Replacement of edge line with all-weather patterned thermo. skips with all-weather thermo and add new shadow striping with 100 mil thermo from Plano Road to SH-78.

The North Texas Tollway Authority (NTTA) is accepting bids for the above mentioned solicitation until 11/20/2025 at 11:00 a.m. CT. Bidders are encouraged to upload their bids to NTTA's Marketplace (https://www.nttamarketplace.org). Bids will be read at a virtual bid opening meeting on 11/20/2025 at 3:00 p.m. CT. See RFB documents for meeting details.

A virtual pre-bid conference will be held on 11/10/2025 at 2:00 p.m. CT. See RFB documents for meeting details.

Email bidpurchasing@ntta.org for questions on registration or use of website.

NOTICE OF SALE

KAUFMAN COUNTY FRESH WATER SUPPLY DISTRICT NO. 4A
(A Political Subdivision of the State of Texas
Located within Kaufman County, Texas)

$5,170,000
Unlimited Tax Utility Bonds, Series 2025

Bids to be Submitted: 10:00 A.M., Central Time
Bids to be Opened: 12:00 P.M., Central Time
Wesday, November 5, 2025

Place and Time of Sale: The Board of Supervisors of Kaufman County Fresh Water Supply District No. 4A (the "District") will meet to receive and publicly read bids for the purchase of the $5,170,000 Unlimited Tax Utility Bonds, Series 2025 (the "Bonds") at the designated meeting place outside the boundaries of the District, at the offices of Coats Rose, P.C., 14000 North Dallas Parkway, Suite 350, Dallas, Texas 75248 at 12:00 P.M., Central Time, Wednesday, November 5, 2025.

Address of Bids: Bids for the Bonds may be delivered to the District electronically, by telephone or delivered directly to the District in a sealed envelope, addressed to the "President and Board of Supervisors of Kaufman County Fresh Water Supply District No. 4A," and delivered to the District's Financial Advisor, Robert W. Baird & Co. Incorporated, 4801 Woodway Drive, Suite 118-E, Houston, Texas 77056 or via email at TXSpecialDistrictBidForms@rwbaird.com, prior to 10:00 A.M., Central Time on the date of the bid opening. Any bid received after 10:00 A.M. Central Time, Wednesday, November 5, 2025, will not be accepted and will be returned unopened. All bidders must submit a signed "Official Bid Form" and a Bank Cashier's Check in the amount of $103,400 payable to the order of the District as a good faith deposit.

Information: The Bonds are more completely described in the "Official Notice of Sale" and the "Preliminary Official Statement" which may be obtained from Robert W. Baird & Co. Incorporated, 4801 Woodway Drive, Suite 118-E, Houston, Texas 77056; Financial Advisor to the District. The District reserves the right to reject any and all bids and to waive any and all irregularities except time of filing. This notice does not constitute an offer to sell the Bonds but is merely notice of sale of the Bonds as required by law. The offer to sell the Bonds will be made only by means of the "Official Notice of Sale," "Preliminary Official Statement," and the "Official Bid Form."

Board of Supervisors
Kaufman County Fresh Water Supply District No. 4A

BID NOTICE

Alvarado I.S.D. is soliciting competitive sealed proposals for Kitchen Equipment. CSP packets may be obtained by contacting Abigail Trevino at the address below.

Alvarado ISD Child Nutrition Department
PO Box 387
110 South Bill Jackson Drive
Alvarado, TX 76009
(817) 783-6807

Bid responses must be received at the Child Nutrition Department no later than 10:00 AM on November 19, 2025 where they will then be opened. There will be a pre-bid meeting on November 7 @ 2:00 at the address above. AISD reserves the right to reject any or all responses and to accept the response that is in the best interest of the district.

NTTA
NORTH TEXAS TOLLWAY AUTHORITY
RFB 06258-NTT-00-GS-MA
Aftermarket Auto Parts

Project Description: Purchase of Aftermarket auto parts for NTTA vehicles and equipment.

NTTA is accepting bids until 11/7/2025 at 11:00 a.m. CT.

Vendors can register, download full project details and documents, submit questions and upload bids to NTTA's Marketplace (https://www.nttamarketplace.org).

Email bidpurchasing@ntta.org for questions on registration or use of website.

NTTA
NORTH TEXAS TOLLWAY AUTHORITY
RFB 06254-NTT-00-GS-MA
General Motors Original Equipment Manufacturer (OEM) Parts & Services

Project Description: Procurement of OEM replacement parts and service from an Authorized GM vendor.

NTTA is accepting bids until 10/24/2025 at 11:00 a.m. CT.

Vendors can register, download full project details and documents, submit questions and upload bids to NTTA's Marketplace (https://www.nttamarketplace.org).

Email bidpurchasing@ntta.org for questions on registration or use of website.

NOTICE OF SALE

KAUFMAN COUNTY FRESH WATER SUPPLY DISTRICT NO. 4B
(A Political Subdivision of the State of Texas
Located within Kaufman County, Texas)

$6,000,000
Unlimited Tax Utility Bonds, Series 2025

Bids to be Submitted: 10:00 A.M., Central Time
Bids to be Opened: 1:00 P.M., Central Time
Wednesday, November 5, 2025

Place and Time of Sale: The Board of Supervisors of Kaufman County Fresh Water Supply District No. 4B (the "District") will receive and publicly read bids for the purchase of the $6,000,000 Unlimited Tax Utility Bonds, Series 2025 (the "Bonds") at the designated meeting place outside the boundaries of the District, at the offices of Coats Rose, P.C., 14000 North Dallas Parkway, Suite 350, Dallas, Texas 75248 at 1:00 P.M., Central Time, Wednesday, November 5, 2025.

Address of Bids: Bids for the Bonds may be delivered to the District electronically, by telephone or delivered directly to the District in a sealed envelope, addressed to the "President and Board of Supervisors of Kaufman County Fresh Water Supply District No. 4B," and delivered to the District's Financial Advisor, Robert W. Baird & Co. Incorporated, 4801 Woodway Drive, Suite 118-E, Houston, Texas 77056 or via email at TXSpecialDistrictBidForms@rwbaird.com, prior to 10:00 A.M., Central Time on the date of the bid opening. Any bid received after 10:00 A.M. Central Time, Wednesday, November 5, 2025, will not be accepted and will be returned unopened. All bidders must submit a signed "Official Bid Form" and a Bank Cashier's Check in the amount of $120,000 payable to the order of the District as a good faith deposit.

Information: The Bonds are more completely described in the "Official Notice of Sale" and the "Preliminary Official Statement" which may be obtained from Robert W. Baird & Co. Incorporated, 4801 Woodway Drive, Suite 118-E, Houston, Texas 77056; Financial Advisor to the District. The District reserves the right to reject any and all bids and to waive any and all irregularities except time of filing. This notice does not constitute an offer to sell the Bonds but is merely notice of sale of the Bonds as required by law. The offer to sell the Bonds will be made only by means of the "Official Notice of Sale," "Preliminary Official Statement," and the "Official Bid Form."

Board of Supervisors
Kaufman County Fresh Water Supply District No. 4B

LOCAL JOURNALISM
The Dallas Morning News

Legal Notices

NOTICE OF PUBLIC HEARING
TARRANT COUNTY CULTURAL EDUCATION FACILITIES FINANCE CORPORATION
HOSPITAL REVENUE BONDS
(METHODIST HOSPITALS OF DALLAS)

Notice is hereby given of a telephonic public hearing to be held by the Tarrant County Cultural Education Facilities Finance Corporation (the "Issuer") on October 31, 2025, at 10:00 a.m. interested parties may join the public hearing on the date and the time indicated above by dialing +1.855.382.6330 (US Toll Free) and, when prompted, entering the meeting code 266113863579#.

The hearing is regarding the issuance of obligations by the Issuer, which may be issued pursuant to a plan of finance in one or more series, in an aggregate maximum stated principal amount not to exceed $230,000,000 (the "Bonds"). The Bonds will be issued as "qualified 501(c)(3) bonds" pursuant to section 145 of the Internal Revenue Code of 1986 (the "Code"). Proceeds of the Bonds will be loaned to Methodist Hospitals of Dallas d/b/a Methodist Health System, a Texas nonprofit corporation, or an affiliate thereof (collectively, the "Obligor"), and will be used to finance and refinance hospital and related health care facilities located at any one or more of the following locations. In the aggregate maximum stated principal amounts of each location noted below: (a) 1300 S Dallas Pkwy, Celina, Texas 75009 (Collin County) ($210,000,000); and (b) 2831 E President George Bush Hwy, Richardson, Texas 75082 (Collin County) ($25,000,000) (collectively, the "Project"). The Obligor is the owner and principal user of the Project.

All interested persons are invited to express their views with respect to the Project and the issuance of the Bonds. Questions or requests for additional information may be directed to Shelby Harden, Bracewell LLP, 1445 Ross Ave., Suite 3800, Dallas, TX 75202 (telephone: (214) 758-1482; e-mail: shelby.harden@bracewell.com). Any interested persons unable to dial into the hearing but would like to express their views with respect to the Project and the issuance of the Bonds may submit their views in writing to Ms. Harden prior to the date scheduled for the hearing.

This notice is published and the above-described hearing is to be held in satisfaction of the requirements of section 147(f) of the Code.

The Dallas Morning News
Download our app at dallasnews.com

Schedule 2
to Exhibit A

NAMES AND COMMENTS OF PERSONS ATTENDING PUBLIC HEARING

None.

CERTIFICATE FOR RESOLUTION

I, the undersigned County Clerk of Tarrant County, Texas, hereby certify as follows:

1. The Commissioners Court of Tarrant County, Texas (the "Commissioners Court") convened in regular meeting, on December 9, 2025, at the regular meeting place hereof; and the roll was called of the duly constituted and acting members of the Commissioners Court, to wit:

Tim O'Hare	County Judge
Roderick Miles Jr.	Commissioner
Alisa Simmons	Commissioner
Matt Krause	Commissioner
Manny Ramirez	Commissioner

and all of the members of the Commissioners Court were present, except _____, thus constituting a quorum. Whereupon, among other business, a written Resolution (the "Resolution") bearing the following caption was introduced for consideration by the Commissioners Court:

> RESOLUTION OF THE COMMISSIONERS COURT OF TARRANT COUNTY, TEXAS, APPROVING THE SALE AND ISSUANCE OF ONE OR MORE SERIES 2026 BONDS BY TARRANT COUNTY CULTURAL EDUCATION FACILITIES FINANCE CORPORATION FOR THE PURPOSE OF FINANCING CERTAIN HEALTH FACILITIES FOR THE BENEFIT OF METHODIST HOSPITALS OF DALLAS D/B/A METHODIST HEALTH SYSTEM AND ITS AFFILIATES AND PROVIDING AN EFFECTIVE DATE

was duly introduced for consideration of said Commissioners Court. It was then duly moved and seconded that said Resolution be passed; and, after due discussion, said motion, carrying with it the passage of said Resolution, prevailed and carried by the following vote:

AYES: _____

NOES: _____

ABSTENTIONS: _____

A true, full and correct copy of the aforesaid Resolution passed at the meeting described in the above and foregoing paragraph is attached to and follows this Certificate; said Resolution has been duly recorded in the official minutes of said Commissioners Court; the above and foregoing paragraph is a true and correct excerpt from said minutes of said meeting pertaining to the passage of said Resolution; the persons named in the above and foregoing paragraph, at the time of said meeting and the passage of said Resolution, were the duly chosen, qualified and acting officers and members of said Commissioners Court as indicated therein; each of said officers and members was duly and sufficiently notified officially and personally in advance, of the time, place and purpose of the aforesaid meeting and that said Resolution would be introduced and considered for passage at said meeting, and each of said officers and members consented in advance to the holding of said meeting for such purpose; and said meeting was open to the

public, and public notice of the time, place and purpose of said meeting was given, all as required by Chapter 551, Texas Government Code, as amended.

SIGNED AND SEALED the 9th day of December, 2025

Mary Louise Nicholson
County Clerk, Tarrant County, Texas

(SEAL)

RESOLUTION OF THE COMMISSIONERS COURT OF TARRANT COUNTY, TEXAS, APPROVING THE SALE AND ISSUANCE OF ONE OR MORE SERIES 2026 BONDS BY TARRANT COUNTY CULTURAL EDUCATION FACILITIES FINANCE CORPORATION FOR THE PURPOSE OF FINANCING CERTAIN HEALTH FACILITIES FOR THE BENEFIT OF METHODIST HOSPITALS OF DALLAS D/B/A METHODIST HEALTH SYSTEM AND ITS AFFILIATES AND PROVIDING AN EFFECTIVE DATE

WHEREAS, by resolution the Commissioners Court (the "Governing Body") of Tarrant County, Texas (the "Sponsoring Entity"), authorized and approved the creation of the Tarrant County Cultural Education Facilities Finance Corporation (the "Issuer"), as a nonprofit cultural education facilities finance corporation under the provisions of Chapter 337 Texas Local Government Code, as amended (the "Act"); and

WHEREAS, Methodist Hospitals of Dallas d/b/a Methodist Health System, a Texas nonprofit corporation (the "System"), has submitted an application requesting that the Board of Directors (the "Board") of the Issuer consider the issuance of one or more series of tax-exempt bonds (the "Series 2026 Bonds") as permitted under the Internal Revenue Code of 1986, as amended (the "Code"), to provide funds to: (a) finance or refinance the purchase, development, construction, reconstruction, renovation, rehabilitation and/or equipping of health facilities of the System or its affiliates (the "Project"); and (b) pay the costs of issuance of the Series 2026 Bonds; and

WHEREAS, after reviewing such application, the Board adopted a resolution whereby the Issuer agreed, subject to certain conditions, to issue the Series 2026 Bonds; and

WHEREAS, in accordance with the provisions of Section 221.062 of the of the Texas Health and Safety Code, as amended (the "Health Facilities Act"), the Issuer filed with the Governing Body of the Sponsoring Entity a Notice to the Commissioners Court of Tarrant County, Texas, of Intent to Issue Bonds and Providing Certain Information Relating Thereto, a copy of which is on file among the official records of the Governing Body; and

WHEREAS, the Governing Body desires to approve by resolution the sale and issuance of the Series 2026 Bonds approved by the Issuer in the aggregate principal amount not to exceed $220,000,000;

NOW, THEREFORE, BE IT RESOLVED BY THE COMMISSIONERS COURT OF TARRANT COUNTY, TEXAS, THAT:

Section 1. Findings, Determinations and Statements. The findings, determinations and statements set forth in the preamble hereof are hereby incorporated by references as if set forth in full.

Section 2. Approval of Sale and Issuance of Series 2026 Bonds. The sale and issuance of the Series 2026 Bonds, and the resolution of the Issuer providing therefor, are hereby approved.

Section 3. Providing an Effective Date. This resolution shall be in full force and effect from and after its passage, and it is accordingly so resolved.

PASSED AND APPROVED BY THE COMMISSIONERS COURT OF TARRANT COUNTY, TEXAS, THIS 9th DAY OF DECEMBER, 2025.

GENERAL CERTIFICATE OF TARRANT COUNTY, TEXAS

I, the undersigned County Clerk of Tarrant County, Texas (the "Sponsoring Entity"), make this certification for the benefit of the Attorney General of the State of Texas and for all persons interested in the validity of proceedings of the Tarrant County Cultural Education Facilities Finance Corporation (the "Issuer") related to the issuance by the Issuer of its Hospital Revenue Bonds (Methodist Hospitals of Dallas) Series 2026 (the "Series 2026 Bonds").

1. The Issuer was created and authorized to act on behalf of the Sponsoring Entity pursuant to the Cultural Education Facilities Finance Corporation Act, Chapter 337, Texas Local Government Code, as amended (the "Act"), and the Articles of Incorporation and Bylaws of the Issuer were approved by the Commissioners Court (the "Governing Body") of the Sponsoring Entity.

2. On October 28, 2025, and at all times since such date, the following named persons have been duly appointed by the Governing Body of the Sponsoring Entity as members of the Board of Directors of the Issuer:

Steven R. Purvis, President	Robert M. Lansford, Secretary
Tobi L. Jackson, Director	Alan Barron
Shelli A. Harveson	Kevin Stadler
Vacant	

3. No action has been taken by the Sponsoring Entity to limit the effectiveness of the resolution of the Issuer authorizing the issuance of the Series 2026 Bonds or otherwise to affect the bond transaction. No litigation is pending against the Sponsoring Entity or, to the best of my knowledge after reasonable investigation, threatened against the Sponsoring Entity (a) to restrain or enjoin the issuance or delivery of the Series 2026 Bonds; or (b) in any way contesting (i) the right and power of the Sponsoring Entity in connection with any action taken by it towards the creation of the Issuer or the issuance of the Series 2026 Bonds or (ii) the titles of the current commission members or officers of the Sponsoring Entity to their respective offices.

4. A Notice to the Governing Body of the Sponsoring Entity of Intent to Issue Bonds and Providing Certain Information Relating Thereto, a true and correct copy of which is attached hereto as Exhibit A, was filed with the Governing Body on November 14, 2025.

5. The Attorney General of the State of Texas is hereby authorized to date this Certificate on and as of the date of his approval of the Series 2026 Bonds, and this Certificate and the matters herein certified shall be deemed for all purposes to be true, accurate and correct on and as of that date, and on and as of the closing date, unless the Sponsoring Entity through an authorized officer shall notify the Attorney General, The Bank of New York Mellon Trust Company, National Association, as trustee, the Issuer and Hilltop Securities, Inc., as representative of the underwriters of the Series 2026 Bonds, in writing to the contrary prior to either of such dates.

WITNESS MY HAND AND THE OFFICIAL SEAL OF THE SPONSORING ENTITY THIS _____, 2025.

TARRANT COUNTY, TEXAS

By: _____
Mary Louise Nicholson
County Clerk

(SEAL)

EXHIBIT A

Notice of Intent

[See attached]

TARRANT COUNTY CULTURAL EDUCATION FACILITIES FINANCE CORPORATION

201 MAIN STREET, SUITE 700
FORT WORTH, TEXAS 76102

DIRECTORS
STEVEN R. PURVIS, PRESIDENT
ROBERT M. LANSFORD, SECRETARY
ALAN BARRON
TOBI L. JACKSON
SHELLI A. HARVESON
KEVIN STADLER

RANDAL L. DEAN
SECRETARY OF THE BOARD

NOTICE OF INTENT TO ISSUE BONDS AND PROVIDING CERTAIN INFORMATION RELATING THERETO

TO: THE COMMISSIONERS COURT OF TARRANT COUNTY, TEXAS

TARRANT COUNTY CULTURAL EDUCATION FACILITIES FINANCE CORPORATION (the "Issuer"), in accordance with the provisions of Section 221.062 of Chapter 221 of the Texas Health and Safety Code, as amended (the "Act"), hereby submits the following information:

1. The Issuer proposes to issue not more than $220,000,000 in aggregate principal amount of its Hospital Revenue Bonds (Methodist Hospitals of Dallas) (the "Series 2026 Bonds") in one or more series, in an amount which will provide the funds, after payment of certain costs relating to the issuance of the Series 2026 Bonds, to finance or refinance the purchase, development, construction, reconstruction, renovation, rehabilitation, and/or equipping of health facilities of Methodist Hospitals of Dallas d/b/a Methodist Health System, a Texas nonprofit corporation (the "System"), described on Exhibit A hereto (the "Series 2026 Project").

2. The System, or an affiliated tax-exempt corporation controlled, directly or indirectly, by the System, is the user of the health facilities financed with all or a portion of the Series 2026 Bonds. Constructing and equipping the Series 2026 Project is necessary to the continued provision of quality healthcare by the System.

IN WITNESS WHEREOF, the signature of an authorized officer of the Issuer is set forth as of this 14th day of November, 2025.

TARRANT COUNTY CULTURAL EDUCATION FACILITIES FINANCE CORPORATION

By: _____
Title: BOARD SECRETARY

EXHIBIT A

DESCRIPTION OF HEALTH FACILITIES
SERIES 2026 PROJECT

The proceeds of the Series 2026 Bonds will be used to: (i) finance or refinance the purchase, development, construction, reconstruction, renovation, rehabilitation, and/or equipping of health facilities of the System (collectively, the "Series 2026 Project"), and (ii) pay the costs of issuance of the Series 2026 Bonds.

The new money portion of the transaction will be used for the construction, renovation and expansion of hospital facilities and the acquisition and installation of capital equipment at:

	Cost Not to Exceed
Collin County:	
Methodist Celina Medical Center 1500 S Dallas Pkwy Celina, Texas	$210,000,000
Methodist Richardson Medical Center 2831 E President George Bush Hwy Richardson, Texas	$25,000,000

Need and Justification for Issuance of Series 2026 Bonds

The System provides valuable healthcare services to the residents of North Central Texas. The Series 2026 Project will enable the System to expand its facilities to provide additional specialized services and to expand current services to provide improved and more cost-effective healthcare.

The Series 2026 Project is necessary to promote and develop healthcare, research and education for the public purpose of promoting health and welfare of the citizens of Texas, and improving the adequacy, cost and accessibility of healthcare, research and education in Texas.

APPROVAL OF
THE COUNTY JUDGE OF COLLIN COUNTY, TEXAS
IN RESPECT TO SECTION 147(f) OF THE INTERNAL REVENUE CODE

Tarrant County Cultural Education Facilities Finance Corporation
Hospital Revenue Bonds (Methodist Hospitals of Dallas) Series 2026

Solely for the purposes of meeting the requirements of section 147(f) of the Internal Revenue Code of 1986, as amended (the "Code"), the undersigned County Judge of Collin County, Texas (the "County") hereby approves the issuance of the above-described obligations (the "Bonds") and the facilities to be financed thereby. Such approval is based upon the Certificate of Public Hearing Officer, attached hereto as **Exhibit A**.

This approval is not to be construed as (i) a representation or warranty by the County or the undersigned that the Bonds will be paid or that any obligations assumed by any of the parties will, in fact, be performed, (ii) a pledge of the faith and credit of or by the County; further, the fact that the undersigned has approved the Bonds as required by the Code may not, in any event, be used as a sales device with respect to the Bonds, or (iii) this approval shall not be construed as a representation or warranty by the County concerning the validity of the Bonds.

EXECUTED as of the 21st day of NOVEMBER, 2025.

County Judge
Collin County, Texas

EXHIBIT A

CERTIFICATE OF PUBLIC HEARING OFFICER

[See attached]

CERTIFICATE OF PUBLIC HEARING OFFICER
REGARDING PUBLIC HEARING (INTERNAL REVENUE CODE § 147(f))

Re: Tarrant County Cultural Education Facilities Finance Corporation Hospital Revenue Bonds (Methodist Hospitals of Dallas) Series 2026 in one or more series (the "Bonds")

I, the undersigned, do hereby make and execute this certificate for the benefit of all persons interested in the reissuance for federal tax purposes of the above-captioned Bonds.

I hereby certify as follows:

1. I am the duly appointed hearing officer for the public hearing which was held in connection with the issuance of the Bonds at the time and place indicated in the Notice of Public Hearing attached hereto as **Schedule 1**.

2. The Notice of Public Hearing was published no less than seven days before the date of the public hearing, as evidenced by the Affidavit of Publication of the Notice of Public Hearing attached hereto as **Schedule 1**.

3. All persons (if any) appearing at the public hearing were given an opportunity to comment on the proposed issuance of the Bonds. No such persons appeared or made comments except as set forth on **Schedule 2** attached hereto.

4. After giving all interested persons an opportunity to appear and comment, the public hearing was declared closed.

WITNESS MY HAND as of the 31th day of October, 2025.

Shelby A. Harden
Hearing Officer

Schedule 1 - Affidavit of Publication of the Notice of Public Hearing (with Attached Notice of Public Hearing)
Schedule 2 - Names and Comments of Persons Attending Public Hearing

Schedule 1
to Exhibit A

AFFIDAVIT OF PUBLICATION WITH ATTACHED NOTICE OF PUBLIC HEARING

The Dallas Morning News

AFFIDAVIT OF PUBLICATION

STATE OF TEXAS

COUNTY OF DALLAS

Before me, a Notary Public in and for Dallas County, this day personally appeared David Ferster, Advertising Representative for *THE DALLAS MORNING NEWS* being duly sworn by oath, states the attached advertisement of: **Ad#** 19293

BRACEWELL LLP

Appeared in *The Dallas Morning News* on October 24, 2025

Dallas Morning News Sales Operations

Sworn to and subscribed before me this Date: 10.24.2025

DANIEL NAVARRO
Notary Public, State of Texas
Comm. Expires 03-22-2028
Notary ID 134822067

Notary Public, State of Texas

Classified Marketplace

One of the most trusted brands in North Texas.

Get started today at **dallasnews.com/classifieds** or call **214.745.8123.**

ANNOUNCEMENTS

- Adoptions
- Found Items
- Hunting/Fishing Leases
- Lost Items
- Notices - Business
- Notices - Personal
- Resorts, Camps, Travel
- Reunions
- Seminars
- Ski Directory
- Sports/Club Memberships

Notices - Personal

UNIDENTIFIED TEENAGE HOMICIDE VICTIM



Discovered On February 10 - 2010, In Barstow, CA. Gender: Female. Age: 14-19 Race: White - Latino. Brown Hair, Brown Eyes, & Pierced Ears. Call: 1-800-843-5678. Case Number: 11416116

AUTOMOTIVE

- Autos
- Commercial Vehicles
- Pickups
- SUVs
- Trailers
- Vans

Acura



2020 Acura MDX 4Dr SUV 3.5 L V6 SAE mtc. Auto FWD White Exterior with black leather interior. CD AC Clean car title. Sunnyvale TX 214-636-9519

Antiques, Classics, Special Interest



1973 VW BUS TYPE 2 Luxpose Rock 7K miles new engine 13K OBO Owned for 45 years with one owner before that California Bus MUST SELL OWNER PASSED 210-760-60 940.465.2295

Honda



2019 Honda Pilot EX-L 4D SUV 3.5 L 6 Cyl Auto 13K mi White Cvt with black leather int Clean car. $31k. Cool AC Sunnyvale TX 214-636-9519.

Want to Buy

Motorcycles & Mopeds

Vintage 1973 Triumph motorcycle, TR7 55speed, B+ condition, $6,200 phone David 479.414.3005

Swap Meets and Shows

Fall Conroe Swap Meet & Car Corral Oct. 24 - Oct. 26 Montgomery Cty Fairgrounds Over 600 Vendors! Open 8 am Saectators Free Parking 337-249-7667 Hotrodsoftexas.com

HOMECENTER FOR RENT

- Acreage, Farms and Ranches
- Commercial Real Estate
- Lake & Vacation Property
- Dallas Rentals
- Metroplex Rentals
- Out of Metroplex Rentals
- Miscellaneous Rentals

Acreage, Farms & Ranches

NOTICE Residential rental locators are required to be licensed by the TX Real Estate Commission, Austin 800-250-8732 Locators may advertise apartment units in general terms & all units may not have the same features. The amount of rent quoted in an ad may be the starting rent for a basic unit which does not have all advertised features.

North Dallas

FREE RENT! 469-256-6453

HOMECENTER FOR SALE

- Acreage, Farms and Ranches
- Commercial Real Estate
- Lake & Vacation Property
- Dallas Sales
- Metroplex Sales
- Out of Metroplex Sales
- Miscellaneous Sales

Acreage, Farms & Ranches

Equal Housing Opportunity

Real estate advertised on this newspaper is subject to the amendment of Federal Fair Housing Act of 1968, which makes it illegal to advertise any preference, limitation or discrimination based on race, color, religion, sex, handicap, familial status or national origin or intention to make such preference, limitation or discrimination. This newspaper will not knowingly accept any advertising for real estate which is in violation of the law. For complaints call the Fair Housing Office in your city or HUD 800-669-9777

Want to Buy

Acreage - Out of Metroplex East

106 Acres Red River County $10K /acre and 16 acres Red River Co. $13K /acre Call 913-422-1746



52 Acres Ranch, Coleman County, $239,000 Bargain, 4 bdrms, barn, Oil drilling app. mountains5557@aol.com



Beautiful 40 Acre Hill Country Ranch 30 miles SW of DFW in Glen Rose. Hardwood trees with rock bottom creek and great views. Paved frontage on two sides, water and electric on property. Great family ranch or development potential. By owner 817-219-7436

Beautiful building site. N. of Necessachies, TX. Spring fed creek, hill trees, paved CR, lots of wild life. Central Heights school district, Cash $55,000 936.556.0940

Cedar Hill



Will Buy Rate Down Oct! Walk to: Joe Pool Lake, C.H. state park, downtown and hillside village shops. DTN Dallas 30min, DFW 30min. 4/2/2 gated drive. Tudor neighborhood. Trees, hardwood floors Was $575K Now $499K 504 Phillis Dr. plus an realtor.com broker phone 972-399-8080 Ue to 100% Financing.

Park Cities



4326 WOODFIN DR $6,895,000 - 9981 sf Transitional French Masterpiece on .75acre Preston Hollow Estates. Timeless elegance & Top-shelf EVERYTHING- Bill Davidson 972-765-4006 bill@firstcommercial realty.com

Make some money from your sell your Buy and sell with locals 214.745.8123

Want to Buy

CASH FOR YOUR HOUSE Any Condition Any price. Call Jim 972-898-5740

BILLBUYSHOUSES.com *Trusted Texan Buying Houses "as is" Since 1991*



Prompt Cash Offer Bill Pays Closing Costs Sell Quick Without Repairs

Bill Jackson Real Estate Broker 214.478.8979

Want to Buy

legal

Bids & Proposals

NTTA

NORTH TEXAS TOLLWAY AUTHORITY

RFB 06252-NTT-00-GS-MA
Automotive and Equipment Tires

Project Description: Purchase of tires for NTTA vehicles and equipment.

NTTA is accepting bids until 11/7/2025 at 11:00 a.m. CT.

Vendors can register, download full project details and documents, submit questions and upload bids to NTTA's Marketplace (https://www.nttamarketplace.org).

Email bidpurchasing@ntta.org for questions on registration or use of website.

NTTA

NORTH TEXAS TOLLWAY AUTHORITY

RFB 06220-NTT-00-GS-MA
Electrical Supplies

Project Description: Purchase and delivery of common electrical supplies used by in-house electricians for routine maintenance and repairs.

NTTA is accepting bids until 11/7/2025 at 11:00 a.m. CT.

Vendors can register, download full project details and documents, submit questions and upload bids to NTTA's Marketplace (https://www.nttamarketplace.org).

Email bidpurchasing@ntta.org for questions on registration or use of website.

NTTA

NORTH TEXAS TOLLWAY AUTHORITY

RFB 06106-PGB-08-CN-PD
PGBT Segment 8 Wall Stabilization

Project Description: stabilization of existing MSE retaining walls on PGBT, ditch grading, inlet adjustment, removal & replacement of riprap, new strips, small signs, and pavement markings.

The North Texas Tollway Authority (NTTA) is accepting bids for the above mentioned solicitation until 11/20/2025 at 11:00 a.m. CT. Bidders are encouraged to upload their bids to NTTA's Marketplace (https://www.nttamarketplace.org). Bids will be read at a virtual bid opening meeting on 11/20/2025 at 3:00 p.m. CT. See RFB documents for meeting details.

A virtual pre-bid conference will be held on 11/1/2025 at 10:00 a.m. CT. See RFB documents for meeting details.

Email bidpurchasing@ntta.org for questions on registration or use of website.

Bids & Proposals

PO#1365-9918/DOH1193048
CITY OF DALLAS CONSTRUCTION ADVERTISEMENT REQUEST FOR COMPETITIVE SEALED PROPOSALS

Competitive Sealed Proposals are required to be submitted electronically via the City of Dallas' solicitation website at https://dallascityhall.bonfirehub.com by 1:00 PM on Fridays. Proposals will be publicly read at 2:00 PM on Fridays and can be viewed on the City of Dallas' website at(https://dallascityhall.bonfirehub.com/bid purchasing). All required documents and project specifications may be obtained from the Bonfire link above. Submittals will not be accepted after the due date/time (see below) and hard copy submittals are not permissible.

C1235-AVI-3198 - REQUEST FOR COMPETITIVE SEALED PROPOSALS FOR DALLAS AIRPORT SYSTEM JOB ORDER CONTRACT

The Dallas Airport System is accepting Competitive Sealed Proposals "Best Value" for a Job Order Contract from firms interested in providing maintenance, repair, alteration, renovation, remediation, or minor construction of city facilities. This is pursuant to Texas Local Government Code, Section 2269.403, and in accordance with the terms, conditions, and requirements set forth in this Solicitation, which considers other factors in addition to price. This Request for Competitive Sealed Proposals (RFCSP) provides sufficient information for interested parties to prepare and submit proposals for consideration by the City of Dallas Department of Aviation.

There will be a pre-proposal meeting on Wednesday, November 5, 2025, at 1:00 pm (CDT) at Dallas Love Field Flight Deck Conference Center, Room Alpha, 8008 Herb Kelleher Way, Dallas, TX 75235. General contractors are welcome to bring key subs. A site visit will not be conducted.

The RFCSP packet may be obtained beginning October 17, 2025, from the City of Dallas' solicitation website (linked above) and all addendums will be posted to this site.

Questions Due Date/Time: Wednesday, November 12, 2025, at 1:00 PM
Solicitation Due Date/Time: Friday, November 21, 2025, at 1:00 PM
Open/Reading Date/Time: Friday, November 21, 2025, at 2:00 PM

NTTA

NORTH TEXAS TOLLWAY AUTHORITY

RFB 06959-DNT-01-CN-PD
DNT Segment 1 Southbound Pavement Rehabilitation

Project Description: Pavement rehabilitation on the Dallas North Tollway (DNT) southbound lanes from Harry Hines Blvd to IH-635. Work includes milling of existing overlay, sealing of joints in underlying pavement, application of seagrid, new asphalt overlay, removal of trench drains, installation of valley gutters, work zone pavement markings, pavement markings, and fog sealing of asphalt shoulders.

The North Texas Tollway Authority (NTTA) is accepting bids for the above mentioned solicitation until 11/20/2025 at 11:00 a.m. CT. Bidders are encouraged to upload their bids to NTTA's Marketplace (https://www.nttamarketplace.org). Bids will be read at a virtual bid opening meeting on 11/20/2025 at 3:00 p.m. CT. See RFB documents for meeting details.

A virtual pre-bid conference will be held on 11/10/2025 at 2:00 p.m. CT. See RFB documents for meeting details.

Email bidpurchasing@ntta.org for questions on registration or use of website.

NTTA

NORTH TEXAS TOLLWAY AUTHORITY

RFB 06318-PGB-00-CN-PD
PGBT Sec 1-3 Pavement Marking Replacement

Project Description: Pavement marking installation on PGBT. Retrace edge lines and skips with 60 mil thermo and add new shadow striping with 100 mil thermo from IH-35E to DNT. Retrace edge lines with 60 mil thermo and add new shadow striping with 100 mil thermo from DNT to Plano Road. Replacement of edge line with all-weather patterned thermo, skips with all-weather thermo and add new shadow striping with 100 mil thermo from Plano Road to SH-78.

The North Texas Tollway Authority (NTTA) is accepting bids for the above mentioned solicitation until 11/20/2025 at 11:00 a.m. CT. Bidders are encouraged to upload their bids to NTTA's Marketplace (https://www.nttamarketplace.org). Bids will be read at a virtual bid opening meeting on 11/20/2025 at 3:00 p.m. CT. See RFB documents for meeting details.

A virtual pre-bid conference will be held on 11/10/2025 at 3:00 p.m. CT. See RFB documents for meeting details.

Email bidpurchasing@ntta.org for questions on registration or use of website.

NOTICE OF SALE

KAUFMAN COUNTY FRESH WATER SUPPLY DISTRICT NO. 4A
(A Political Subdivision of the State of Texas
Located within Kaufman County, Texas)

$5,170,000
Unlimited Tax Utility Bonds, Series 2025

Bids to be Submitted: 10:00 A.M., Central Time
Bids to be Opened: 12:00 P.M., Central Time
Wednesday, November 5, 2025

Place and Time of Sale: The Board of Supervisors of Kaufman County Fresh Water Supply District No. 4A (the "District") will meet to receive and publicly read bids for the purchase of the $5,170,000 Unlimited Tax Utility Bonds, Series 2025 (the "Bonds") at the designated meeting place outside the boundaries of the District, at the offices of Coats Rose, P.C., 16000 North Dallas Parkway, Suite 350, Dallas, Texas 75248 at 12:00 P.M., Central Time, Wednesday, November 5, 2025.

Address of Bids: Bids for the Bonds may be delivered to the District electronically, by telephone or delivered directly to the District in a sealed envelope, addressed to the "President and Board of Supervisors of Kaufman County Fresh Water Supply District No. 4A," and delivered to the District's Financial Advisor, Robert W. Baird & Co. Incorporated, 4801 Woodway Drive, Suite 118-E, Houston, Texas 77056 or via email at TXSpecialDistrict-BidForms@rwbaird.com, prior to 10:00 A.M., Central Time on the date of the bid opening. Any bid received after 10:00 A.M. Central Time, Wednesday, November 5, 2025, will not be accepted and will be returned unopened. All bidders must submit a signed "Official Bid Form" and a Bank Cashier's Check in the amount of $103,400 payable to the order of the District as a good faith deposit.

Information: The Bonds are more completely described in the "Official Notice of Sale" and the "Preliminary Official Statement" which may be obtained from Robert W. Baird & Co. Incorporated, 4801 Woodway Drive, Suite 118-E, Houston, Texas 77056; Financial Advisor to the District. The District reserves the right to reject any and all bids and to waive any and all irregularities except time of filing. This notice does not constitute an offer to sell the Bonds but is merely notice of sale of the Bonds as required by law. The offer to sell the Bonds will be made only by means of the "Official Notice of Sale," "Preliminary Official Statement," and the "Official Bid Form."

Board of Supervisors
Kaufman County Fresh Water Supply District No. 4A

NOTICE OF SALE

KAUFMAN COUNTY FRESH WATER SUPPLY DISTRICT NO. 4B
(A Political Subdivision of the State of Texas
Located within Kaufman County, Texas)

$6,000,000
Unlimited Tax Utility Bonds, Series 2025

Bids to be Submitted: 10:00 A.M., Central Time
Bids to be Opened: 1:00 P.M., Central Time
Wednesday, November 5, 2025

Place and Time of Sale: The Board of Supervisors of Kaufman County Fresh Water Supply District No. 4B (the "District") will receive and publicly read bids for the purchase of the $6,000,000 Unlimited Tax Utility Bonds, Series 2025 (the "Bonds") at the designated meeting place outside the boundaries of the District, at the offices of Coats Rose, P.C., 16000 North Dallas Parkway, Suite 350, Dallas, Texas 75248 at 1:00 P.M., Central Time, Wednesday, November 5, 2025.

Address of Bids: Bids for the Bonds may be delivered to the District electronically, by telephone or delivered directly to the District in a sealed envelope, addressed to the "President and Board of Supervisors of Kaufman County Fresh Water Supply District No. 4B," and delivered to the District's Financial Advisor, Robert W. Baird & Co. Incorporated, 4801 Woodway Drive, Suite 118-E, Houston, Texas 77056 or via email at TXSpecialDistrict-BidForms@rwbaird.com, prior to 10:00 A.M., Central Time on the date of the bid opening. Any bid received after 10:00 A.M. Central Time, Wednesday, November 5, 2025, will not be accepted and will be returned unopened. All bidders must submit a signed "Official Bid Form" and a Bank Cashier's Check in the amount of $120,000 payable to the order of the District as a good faith deposit.

Information: The Bonds are more completely described in the "Official Notice of Sale" and the "Preliminary Official Statement" which may be obtained from Robert W. Baird & Co. Incorporated, 4801 Woodway Drive, Suite 118-E, Houston, Texas 77056; Financial Advisor to the District. The District reserves the right to reject any and all bids and to waive any and all irregularities except time of filing. This notice does not constitute an offer to sell the Bonds but is merely notice of sale of the Bonds as required by law. The offer to sell the Bonds will be made only by means of the "Official Notice of Sale," "Preliminary Official Statement," and the "Official Bid Form."

Board of Supervisors
Kaufman County Fresh Water Supply District No. 4B

Legal Notices

LOCAL JOURNALISM DELIVERED THE WAY YOU WANT

The Dallas Morning News

NOTICE OF PUBLIC HEARING

TARRANT COUNTY CULTURAL EDUCATION FACILITIES FINANCE CORPORATION
HOSPITAL REVENUE BONDS
(METHODIST HOSPITALS OF DALLAS)

Notice is hereby given of a telephonic public hearing to be held by the Tarrant County Cultural Education Facilities Finance Corporation (the "Issuer") on October 31, 2025, at 10:00 a.m. Interested parties may join the public hearing on the date and the time indicated above by dialing +1.855.282.6330 (US Toll Free) and, when prompted, entering the meeting code 266115863578#.

The hearing is regarding the issuance of obligations by the Issuer, which may be issued pursuant to a plan of finance in one or more series, in an aggregate maximum stated principal amount not to exceed $230,000,000 (the "Bonds"). The Bonds will be issued as "qualified 501(c)(3) bonds" pursuant to section 145 of the Internal Revenue Code of 1986 (the "Code"). Proceeds of the Bonds will be loaned to Methodist Hospitals of Dallas dbaa Methodist Health System, a Texas nonprofit corporation, or an affiliate thereof (collectively, the "Obligor"), and will be used to finance and refinance hospital and related health care facilities located at any one or more of the following locations, in the aggregate maximum stated principal amounts at each location noted below: (a) 1300 S Dallas Pkwy, Celina, Texas 75009 (Collin County) ($210,000,000); and (b) 2831 E President George Bush Hwy, Richardson, Texas 75082 (Collin County) ($35,000,000) (collectively, the "Project"). The Obligor is the owner and principal user of the Project.

All interested persons are invited to express their views with respect to the Project and the issuance of the Bonds. Questions or requests for additional information may be directed to Shelby Harden, Bracewell LLP, 1445 Ross Ave., Suite 3800, Dallas, TX 75202 (telephone: (214) 758-1682; e-mail: shelby.harden@bracewell.com). Any interested persons unable to dial into the hearing but would like to express their views with respect to the Project and the issuance of the Bonds may submit their views in writing to Ms. Harden prior to the date scheduled for the hearing.

This notice is published and the above-described hearing is to be held in satisfaction of the requirements of section 147(f) of the Code.

INVITATION FOR BIDS

BID NUMBER: RFB 69-26-02

Formal bids received through the PlanetBids website located at https://vendors.planetbids.com/portal/78679/portal-home until 2:00 PM, local time, THURSDAY, NOVEMBER 13, 2025. There is no fee for registering or bidding on this project through PlanetBids. If hand-delivered, bids are to be turned at City of The Colony, 6800 Main Street, The Colony, Texas 75056 1133 in a sealed envelope marked with the project name/bid number and will be received until 2:00 PM, local time, THURSDAY, NOVEMBER 13, 2025.

BID NUMBER: RFB 69-26-02

PRE-BID AT 2:00 PM, TUESDAY, NOVEMBER 4, 2025 AT 6800 MAIN STREET, THE COLONY TEXAS. ALTHOUGH NOT MANDATORY, BIDDERS ARE STRONGLY URGED TO ATTEND THIS CONFERENCE. ANY MISUNDERSTANDINGS DUE TO NON-ATTENDANCE WILL NOT BE REASON FOR LETTING A BIDDER OUT OF THE BID.

RESULTS WILL BE READ AT 2:10 PM, THURSDAY, NOVEMBER 13, 2025.

SCOPE OF WORK:
The scope of work consists of the reconstruction of Hawse Drive (Arbor Glen Road to Paige Road), Adams Drive (Paige Road to Ramsey Drive), and Pemberton Lane (Blair Oaks Drive to the eastern Cul-de-Sac). Water, sanitary sewer and drainage improvements are provided at various locations of the project. The work includes, but is not limited to, mobilization, preparation of right-of-way, traffic control, approximately 14,031 SY of 6-inch thick reinforced concrete pavement on flex base subgrade, and approximately 37,889 SF of 4-inch thick reinforced concrete sidewalks, approximately 380 LF of 21-inch to 6'x3' reinforced concrete pipe and box, 3,877 LF of 6-inch to 8-inch diameter sanitary sewer line, 4,300 LF of 8-inch water line, and any other work deemed necessary by the City of The Colony. All of the above shall be done in accordance with TxDOT and NCTCOG specifications with the City of the Colony's Addenda and as per instructions of the City of The Colony City Engineer. All construction sequencing and barricading will be done according to the City of The Colony Standards. The opinion of probable construction cost for the overall project is $6,062,000.00.

Specifications, bid proposal forms, addendums and instructions to bidders may be downloaded from the PlanetBids website, also available from the offices of Halff Associates, Inc. at 2601 Meacham Blvd., Suite 600, Fort Worth, TX, 76137, for $100.00 per set. Please call Kevin Gronwoldt at (817) 764 7446 or email at kgronwoldt@halff.com to coordinate document pick up.

Please send no cashier checks for bid bonds, the cashier check will be sent back to the vendor and bid will not be accepted. The bidder must submit Proof of Insurance and a Bid Bond in the amount of five (5%) percent of the bid amount to Joe Gerum (jgerum@thecolonytx.gov). Originals must be submitted in the bid packet OR received by the Purchasing Manager before the bid opening.

Any questions regarding the bid process, procedures, plans, or specifications shall be submitted through PlanetBids. All responses will be posted to PlanetBids. Any addenda for this project will be posted on the PlanetBids website where prospective bidders may download them. All documents must be submitted with the bid package and "filled out completely" by the bidders. City of The Colony reserves the right to reject any or all bids, in whole or in part, to waive any informality in any bid, and to accept the bid which, in its discretion, is in the best interest of the City of The Colony.

Sincerely,
Joe Gerum
Purchasing Manager
972-624-3145

BID NOTICE

Alvarado I.S.D. is soliciting competitive sealed proposals for Kitchen Equipment. CSP packets may be obtained by contacting Abigail Trevino at the address below.

Alvarado ISD Child Nutrition Department
PO Box 387
110 South Bill Jackson Drive
Alvarado, TX 76009
(817) 783-6807

Bid responses must be received at the Child Nutrition Department no later than 10:00 AM on November 19, 2025 where they will then be opened. There will be a pre-bid meeting on November 7 @ 2:00 at the address above. AISD reserves the right to reject any or all responses and to accept the response that is in the best interest of the district.

NTTA

NORTH TEXAS TOLLWAY AUTHORITY

RFB 06250-NTT-00-GS-MA
Aftermarket Auto Parts

Project Description: Purchase of Aftermarket auto parts for NTTA vehicles and equipment.

NTTA is accepting bids until 11/7/2025 at 11:00 a.m. CT.

Vendors can register, download full project details and documents, submit questions and upload bids to NTTA's Marketplace (https://www.nttamarketplace.org).

Email bidpurchasing@ntta.org for questions on registration or use of website.

NTTA

NORTH TEXAS TOLLWAY AUTHORITY

RFB 06254-NTT-00-GS-MA
General Motors Original Equipment Manufacturer (OEM) Parts & Services

Project Description: Procurement of OEM replacement parts and service from an Authorized GM vendor.

NTTA is accepting bids until 10/24/2025 at 11:00 a.m. CT.

Vendors can register, download full project details and documents, submit questions and upload bids to NTTA's Marketplace (https://www.nttamarketplace.org).

Email bidpurchasing@ntta.org for questions on registration or use of website.

Best Cash Offer For Your House! Turn Your Unwanted House Into Cash

HOUSE HUNTERS of Dallas.com 30 Years Buying Homes in DFW Metroplex $$ More Money For You $$ CALL NOW 214-906-2291

- No Repairs
- No Commissions
- No Closing Costs

Just Quick Cash! 7 Day Closings!

Eileen Petroski Licensed Realtor

We Buy Houses In Any Condition Or Location

The Dallas Morning News

Download our app at dallasnews.com

Schedule 2
to Exhibit A

NAMES AND COMMENTS OF PERSONS ATTENDING PUBLIC HEARING

None.

TARRANT COUNTY
COMMISSIONERS COURT COMMUNICATION

Court Date: December 9, 2025	**Court Order #:**	**Page:** 1 of 1
Department: Administrator	**Prepared By:** Maegan South, Assistant County Administrator	**Approved By:** Maegan South, Assistant County Administrator

SUBJECT:

Consideration of Amendment No. 2 to the Participation Agreement for the Town of Trophy Club Tax Increment Financing Zone Number 1

*****CONSENT AGENDA *****

COMMISSIONERS COURT ACTION REQUESTED

It is requested that Commissioners Court consider the attached Resolution and Amendment No 2 to the Participation Agreemetn between the Town of Trophy Club and Tarrant County for Town of Trophy Club Tax Increment Financing Zone Number One.

BACKGROUND

On April 8, 2014, the Commissioners Court approved County participation in the Town of Trophy Club Increment Financing Reinvestment Zone (TIRZ) One, contributing sixty percent (60%) of its tax increment from the Zone for a period of twenty (20) years, or until a total County increment contribution of $1,571,011 has been reached. The Hospital District is not participating in this TIRZ.

On June 7, 2016, the Commissioners Court approved Amendment No. 1 modifying the definition of the tax increment base year.

On September 22, 2025, the Trophy Club Town Council adopted Ordinance No. 2025-29 restructuring the membership of the Tax Increment Reinvestment Zone (TIRZ) No. 1 Board of Directors so that it is composed of the same members as the Town's Economic Development Corporation (EDC) Board of Directors. Due to this restructuring, the agreement must be brought back before the Court for consideration. This does not change the structure of the County's membership.

The District Attorney's Office has reviewed and approved Amendment No. 2.

FISCAL IMPACT

Amendment No. 2 has no fiscal impact to Tarrant County.

PASSED AND APPROVED on December 9, 2025.

COUNTY OF TARRANT
STATE OF TEXAS

_____

Tim O'Hare
County Judge

_____

Roderick Miles, Jr.
Commissioner, Precinct 1

_____

Matt Krause
Commissioner, Precinct 3

_____

Alisa Simmons
Commissioner, Precinct 2

_____

Manny Ramirez
Commissioner, Precinct 4

APPROVED AS TO FORM:

_____

District Attorney's Office*

*By law, the District Attorney's Office may only approve contracts for its clients. We reviewed this document as to form from our client's legal perspective. Other parties may not rely on this approval. Instead, those parties should seek contract review from independent counsel.

Attachments

Amendment No. 2 to TC and Tarrant County TIRZ Agreement.pdf
Resolution.pdf

AMENDMENT NO. 2 TO
TOWN OF TROPHY CLUB AND TARRANT COUNTY, TEXAS
AGREEMENT TO PARTICIPATE IN
TAX INCREMENT REINVESTMENT ZONE NUMBER ONE,
TOWN OF TROPHY CLUB, TEXAS

This Amendment No. 2 to Town of Trophy Club and Tarrant County, Texas, Agreement to Participate in Tax Increment Reinvestment Zone Number One, Town of Trophy Club, Texas ("Amendment") is entered into by and between the Town of Trophy Club, a Texas home rule municipality organized under the laws of the State of Texas (the "Town" or "City") and Tarrant County, Texas (the "County" or "Taxing Unit"). The Town and County are referred to collectively as the "Parties" or individually as a "Party."

The Town and County hereby agree that the following statements are true and correct and constitute the basis upon which the Town and the County have entered into this Amendment:

A. On August 19, 2013, the Town Council of the Town of Trophy Club, Texas (the "Council") adopted Town Ordinance No. 2013-23 establishing a board of directors for the Zone (the "TIRZ Board") and designating certain real property generally located at Trophy Wood Drive and Highway 114 as Tax Increment Reinvestment Zone Number One, Town of Trophy Club, Texas (the "Zone"). Town Ordinance No. 2013-23, as amended, is hereby incorporated into this Amendment by reference for all purposes; and

B. On or about April 8, 2014, the Town and County entered into an Agreement (the "Participation Agreement") under which County agreed to deposit sixty percent (60%) of the County's Tax Increment, up to a maximum of $1,571,011, into the Tax Increment Fund for the Zone, as specifically provided in that Participation Agreement; and

C. On or about June 14, 2016, the Parties approved Amendment No. 1 to the Participation Agreement ("Amendment No. 1") to correctly define the Tax Increment Base for the Zone; and

D. The Town desires to streamline operations and promote administrative consistency for the TIRZ Board by aligning the membership of the TIRZ Board with that of the Town's Economic Development Corporation Board of Directors; and

E. Section 311.009(a) of the Texas Tax Code provides that the board of directors of a reinvestment zone must consist of at least five (5) and not more than fifteen (15) members, and allows the governing body of the municipality to appoint not more than ten (10) directors to the TIRZ Board; and

F. On September 22, 2025, the Town Council adopted Ordinance No. 2025-____, to increase the membership of the TIRZ Board to eight (8) members, which includes seven (7) members of the Town's Economic Development Corporation Board of

Directors, as appointed and serving pursuant to Chapter 505 of the Texas Local Government Code, or other individuals eligible under Section 311.009 of the Texas Tax Code, and one (1) member appointed by the County; and

G. The Parties desire to amend the Agreement, as amended by Amendment No. 1, as herein set forth in this Amendment No. 2.

NOW, THEREFORE, for and in consideration of the conditions set forth herein, the sufficiency of which is hereby acknowledged, the Town and the County do hereby contract, covenant, and agree as follows:

1. Recitals. The Parties hereby agree that the recitals set forth above are true and correct and form the basis upon which they have entered into the Agreement, as amended by that Amendment No. 1, and this Amendment No. 2. The recitals in the Agreement are incorporated into this Amendment No. 2 as if fully set forth herein, except as amended by this Amendment No. 2, and the defined terms in the Agreement shall have the meaning assigned to such terms in the Agreement, unless otherwise defined herein.

2. Amendment. Section **4.4. TIRZ Board Membership**, of the Agreement is hereby removed and replaced in its entirety to provide as follows:

"Pursuant to Section 3 of Town Ordinance No. 2013-23, creating the Zone, as amended by Town Ordinance No. 2025-____ during the term of the Zone, the TIRZ Board shall consist of up to eight (8) members. The TIRZ Board members shall consist of seven (7) members of the Town's Economic Development Corporation Board of Directors, as appointed and serving pursuant to Chapter 505 of the Texas Local Government Code, and the Town Council may also appoint other individuals eligible under Section 311.009 of the Texas Tax Code. One (1) member shall be appointed by Tarrant County, should the County choose to exercise its appointment authority in accordance with the Interlocal Participation Agreement and Section 311.009 of the Texas Tax Code. All members shall serve for staggered terms of two (2) years each. The Town Council shall appoint a chairman from among the members. The TIRZ Board may elect a vice-chairman, and other officers as needed. The TIRZ Board shall make recommendations to the Town Council regarding the administration and operation of the Zone and shall perform all duties imposed upon it by Chapter 311 of the Texas Tax Code, including powers of a municipality under Chapter 380, Local Government Code. The TIRZ Board shall not have authority to issue bonds, impose taxes or fees, exercise the power of eminent domain, or give final approval to the Zone's final project and financing plan without approval by the Town Council."

3. This Amendment No. 2 contains the final written expression of the Town and the County with respect to the subject matter hereof. Except as amended herein, all other terms and conditions of the Agreement, as amended by Amendment No. 1, shall remain in full force and effect. This Amendment No. 2 may be executed in any number of counterparts, each of which shall be deemed an original, but all of which together shall constitute one and the same instrument. The execution of this Amendment No. 2 may be accomplished by facsimile or electronic signatures and shall be deemed fully executed upon the exchange among the parties of signed facsimile or electronic copies of this Amendment No. 2.

IN WITNESS WHEREOF, the Parties hereto have caused this Amendment No. 2 to be executed by their duly authorized officers and to be effective as of the last date set forth below.

AGREED AND EXECUTED as of the last date indicated below:

TARRANT COUNTY
(County):

By: _____
Tim O'Hare, County Judge

Date: _____

ATTEST:

By: _____
Deputy County Clerk

APPROVED AS TO FORM:

By: _____
Assistant Criminal District Attorney

TOWN OF TROPHY CLUB,
TEXAS (Town):

By: _____
Brandon Wright, Town Manager

Date: 24 SEPT 2025

ATTEST:

By: _____
Tammy Dixon, Town Secretary

APPROVED AS TO FORM:

By: _____
Dean Roggia, Town Attorney

Approved by Trophy Club Town Council on 09/22/2025

RESOLUTION

AMENDMENT NO. 2 TO PARTICIPATION AGREEMENT FOR TOWN OF TROPHY CLUB TAX INCREMENT FINANCING REINVESTMENT ZONE NUMBER ONE

WHEREAS, on April 8, 2014, the Town of Trophy Club and Tarrant County, entered into an agreement under which the County agreed to deposit sixty percent (60%) of the County's Tax Increment into the TIF District's Tax Increment Fund ("Participation Agreement"), as specifically provided in that Participation Agreement; and

WHEREAS, on June 7, 2017, the Commissioners Court approved Amendment No. 1 modifying the definition of the tax increment base year; and

WHEREAS, Tarrant County has been requested to approve Amendment No. 2 to the Participation Agreement, restructuring the membership of the TIF No. 1 Board of Directors so that it is composed of the same members as the Town's Economic Development Corporation (EDC) Board of Directors.

NOW, THEREFORE, BE IT RESOLVED:

That the Tarrant County Commissioners Court hereby approves the modification of the membership structure; that Amendment No. 2 to the Participation Agreement for the County be and is hereby approved; that the Commissioners Court hereby agrees to enter into the Amendment No. 2 to the Participation Agreements as a party thereto; and the County Judge of the County be and is hereby authorized to execute said Amendment No. 2 to the Participation Agreement on behalf of the County and Commissioners Court substantially in the form of the attached hereto and carry out the terms thereof at the appropriate time(s).

PASSED AND APPROVED, IN OPEN COURT, this 16th day of December 2025, through Court Order No._____.

_____
Tim O'Hare, County Judge

_____
Roderick Miles
Commissioner, Precinct 1

_____
Alisa Simmons
Commissioner, Precinct 2

_____
Matt Krause
Commissioner, Precinct 3

_____
Manny Ramirez
Commissioner, Precinct 4

TARRANT COUNTY
COMMISSIONERS COURT COMMUNICATION

Court Date: December 9, 2025	**Court Order #:**	**Page:** 1 of 1
Department: Archives	**Prepared By:** Jaimi Parker	**Approved By:** Maegan South, Assistant County Administrator

SUBJECT:

Consideration to Accept Monetary Donations from Various Individuals to the Tarrant County Archives

***** CONSENT AGENDA *****

COMMISSIONERS COURT ACTION REQUESTED

It is requested that the Commissioners Court accept monetary donations from various individuals to the Tarrant County Archives.

BACKGROUND

The Tarrant County Archives donation account was created for the acceptance of monetary donations for use by the Tarrant County Archives.

The following donations are included in this action.

- Jonnetta Selvidge - $2.30
- Stacy Luecker - $5.00

FISCAL IMPACT

Funds in the amount of $7.30 will be deposited into the Tarrant County Archives donation account: T2100-2026 Historical Commission Archives Fund/ 5910200000 Historical Commision Archives/ 484002 Donations - Historical Commission.

TARRANT COUNTY
COMMISSIONERS COURT COMMUNICATION

Court Date: December 9, 2025	**Court Order #:**	**Page:** 1 of 1
Department: Auditor	**Prepared By:** Mark Kratovil, Assistant District Attorney	**Approved By:** Mark Kratovil, Assistant District Attorney

SUBJECT:

Consideration to Request Written Report of Finances for Fiscal Year 2025 Under Health & Safety Code Section 775.036 from Tarrant County Emergency Services District No. 1

***** CONSENT AGENDA *****

COMMISSIONERS COURT ACTION REQUESTED

It is requested that the Commissioners Court consider placing a written request with Tarrant County Emergency Services District No. 1 ("ESD") for a report of the ESD's budget, tax rate, and debt service for FY 2025.

BACKGROUND

Under Texas Health & Safety Code section 775.036(a)(5), the Tarrant County Commissioners Court may request a written report from the ESD regarding the ESD's budget, tax rate, and debt service for the preceding fiscal year. Any request for such a report must be made to the ESD no later than December 31st. The ESD must deliver the report to the Commissioners Court no later than February 1, 2026. If approved, the Tarrant County Administrator will place a written request with the ESD on behalf of the Commissioners Court for a written report pursuant to section 775.036(a)(5) for fiscal year 2025.

FISCAL IMPACT

There is no fiscal impact associated with this action.

TARRANT COUNTY
COMMISSIONERS COURT COMMUNICATION

Court Date: December 9, 2025	**Court Order #:**	**Page:** 1 of 85
Department: Auditor	**Prepared By:** Rebecca Powell	**Approved By:** Kimberly Buchanan

SUBJECT:

Receive and File the Tarrant County Financial Statements for the Twelve Months Ended September 30, 2025

***** CONSENT AGENDA *****

COMMISSIONERS COURT ACTION REQUESTED

It is requested that the Commissioners Court consider receiveing and filing the Tarrant County Unaudited Financial Statements for the twelve-month period ended September 30, 2025.

BACKGROUND

As a matter of record, Tarrant County Financial Statements are periodically filed with Commissioners Court. The monthly financial statements are published on the County's website unde the Auditor's Office department.

FISCAL IMPACT

There is no fiscal impact associated with this item.

Attachments

SEPT25 Financials 12.1.2025 - redacted.pdf

TARRANT COUNTY AUDITOR

TARRANT COUNTY, TEXAS

MONTHLY FINANCIAL STATEMENTS (UNAUDITED)

FOR THE MONTH OF SEPTEMBER 2025

This page intentionally left blank

Kimberly M. Buchanan, CPA
Tarrant County Auditor

Linda R. Castillo
First Assistant County Auditor

Office of the Tarrant County Auditor
100 E. Weatherford, Room 506
Fort Worth, Texas 76196-0103

Phone (817) 884-1205
Fax (817) 884-1104

December 9, 2025

The Honorable District Judges
The Honorable Commissioners Court
Tarrant County, Texas

RE: Tarrant County Auditor's September 2025 Financial Reports

I hereby submit the unaudited Monthly Financial Reports for the twelve months ended September 30, 2025. The information presented in these reports was prepared in accordance with Chapter 114 of the Texas Local Government Code of Tarrant County, Texas.

Sincerely,

[redacted]

Kimberly M. Buchanan, CPA
Tarrant County Auditor

Table of Contents

September 2025 Monthly Financial Statements
(unaudited)

FINANCIAL SECTION

Fund Financial Statements:

- Governmental Funds – Combined Balance Sheet 1
- Governmental Funds – Combined Statement of Revenues and Expenditures and Changes in Fund Balance 3
- Internal Service Funds – Statement of Net Position 5
- Internal Service Funds - Combining Statement of Revenues, Expenses and Changes in Funds Net Position 7
- Fiduciary Funds – Balance Sheet 9
- Fiduciary Funds - Combined Schedule of Cash Receipts and Disbursements 10

Notes to the Financial Statements:

- Note I Summary of Significant Accounting Policies 11
- Note II Basis of Presentation 12
- Note III Negative Cash Balances 13
- Note IV Investments 15
- Note V Contingencies 16
- Note VI Bonded Debt 16
- Note VII Schedule of Interfund Transfers 18

Combining Nonmajor Governmental Fund Statements:

- Capital Fund Descriptions 20
- Capital Project Funds – Combining Balance Sheet 21
- Capital Project Funds – Combining Statement of Revenues and Expenditures and Changes in Fund Balance 23
- Other Governmental Fund Descriptions 25
- Other Governmental Funds – Combining Balance Sheet 27
- Other Governmental Funds – Combining Statement of Revenues and Expenditures and Changes in Fund Balance 29
- Records Preservation Fund Descriptions 31
- Records Preservation Funds – Combining Balance Sheet 32
- Records Preservation Funds – Combining Statement of Revenues and Expenditures and Changes in Fund Balance 34
- Court Designated Fund Descriptions 36
- Court Designated Funds – Combining Balance Sheet 38
- Court Designated Funds – Combining Statement of Revenues and Expenditures and Changes in Fund Balance 41

Summary of Cash and Investments 44

Table of Contents

September 2025 Monthly Financial Statements
(unaudited)

BUDGETARY SECTION

Summary Budget Versus Actual (Budget Basis) Revenue and Expenditures (Tax Supported Funds) 45
General Fund Fees of Office Analysis 47
Budget Report Expenditures (Tax Supported Funds) 48
Summary Budget Versus Actual (Budget Basis) Revenue (Special Purpose Funds) 52
Budget Report Expenditures (Special Purpose Funds) 54

COMBINED BALANCE SHEET
GOVERNMENTAL FUNDS
As of 9/30/2025

Combined Total Governmental Funds		General	Road and Bridge	Debt Service
	ASSETS			
$ 854,060,122	Cash, cash equivalents, and investments	$ 160,568,383	$ 26,924,682	$ 1,949,823
	Receivables			
7,372,731	Taxes receivable (net)	6,731,608	-	641,123
17,905,121	Other receivables (net)	5,064,900	294,471	-
3,948,623	Fee office receivables (net)	3,948,623	-	-
10,268,503	Due from other funds	10,268,503	-	-
7,178,696	Supplies and prepaid items	1,543,302	1,253,513	-
$ 900,733,796	TOTAL ASSETS	$ 188,125,319	$ 28,472,666	$ 2,590,946
	LIABILITIES			
$ 45,441,559	Accounts payable	$ 10,059,931	$ 1,793,324	$ -
38,551,805	Other liabilities	33,939,419	735,183	-
10,268,503	Due to other funds	-	-	-
50,865,443	Unearned revenue	67,883	-	-
145,127,310	TOTAL LIABILITIES	44,067,233	2,528,507	-
	DEFERRED INFLOWS OF RESOURCES			
7,372,731	Unavailable revenue-property taxes	6,731,608	-	641,123
3,948,623	Unavailable revenue-fee office receivables	3,948,623	-	-
1,389,516	Deferred lease inflow	848,603	-	-
12,710,870	TOTAL DEFERRED INFLOWS OF RESOURCES	11,528,834	-	641,123
	FUND BALANCES			
742,895,616	TOTAL FUND BALANCES	132,529,252	25,944,159	1,949,823
$ 900,733,796	TOTAL LIABILITIES, DEFERRED INFLOWS OF RESOURCES, AND FUND BALANCES	$ 188,125,319	$ 28,472,666	$ 2,590,946

Capital Projects	Grants	Other Governmental Funds
$ 481,190,417	$ 57,652,189	$ 125,774,628
-	-	-
98,215	8,223,169	4,224,366
-	-	-
-	-	-
231,100	3,781,285	369,496
$ 481,519,732	$ 69,656,643	$ 130,368,490
$ 19,787,433	$ 5,977,189	$ 7,823,682
-	2,773,271	1,103,932
-	10,145,148	123,355
-	50,761,035	36,525
19,787,433	69,656,643	9,087,494
-	-	-
-	-	-
-	-	540,913
-	-	540,913
461,732,299	-	120,740,083
$ 481,519,732	$ 69,656,643	$ 130,368,490

STATEMENT OF REVENUES, EXPENDITURES AND CHANGES IN FUND BALANCES GOVERNMENTAL FUNDS

For the twelve (12) months ended 9/30/2025

Combined Total Governmental Funds		General	Road and Bridge	Debt Service
	REVENUES:			
$ 511,035,631	Taxes	$ 467,319,995	$ 32	$ 43,457,337
1,401,870	Licenses and permits	1,396,370	-	-
124,232,803	Fees of office	75,083,100	19,775,291	-
240,405,129	Intergovernmental	36,082,487	91,120	-
44,620,393	Investment income	15,026,856	1,155,221	855,399
25,482,564	Other revenues	15,964,003	1,021,259	-
947,178,390	TOTAL REVENUES	610,872,811	22,042,923	44,312,736
	EXPENDITURES:			
	Current:			
170,264,115	General government	152,179,591	895	-
217,605,078	Public safety	197,206,698	-	-
30,070,159	Transportation support	651,710	29,418,449	-
238,880,251	Judicial	218,472,953	-	-
166,841,443	Community services	9,753,172	-	-
115,648,565	Capital outlay	2,036,804	-	-
	Debt service:			
36,382,100	Principal payments	3,760,500	-	31,080,000
12,917,669	Interest and fiscal charges	147,181	-	12,658,254
988,609,380	TOTAL EXPENDITURES	584,208,609	29,419,344	43,738,254
(41,430,990)	Excess (deficiency) of revenues over (under) expenditures	26,664,202	(7,376,421)	574,482
	OTHER FINANCING SOURCES (USES):			
81,350,047	Transfers in	1,282,090	6,751,208	-
(83,864,648)	Transfers out	(67,567,009)	-	-
2,424,722	Leases (as lessee)	1,890,077	-	-
(89,879)	TOTAL OTHER FINANCING SOURCES (USES)	(64,394,842)	6,751,208	-
(41,520,869)	CHANGE IN FUND BALANCE	(37,730,640)	(625,213)	574,482
784,416,485	FUND BALANCES, beginning of year	170,259,892	26,569,372	1,375,341
$ 742,895,616	FUND BALANCES, end of period	$ 132,529,252	$ 25,944,159	$ 1,949,823

Capital Projects	Grants	Other Governmental Funds
$ -	$ -	$ 258,267
-	-	5,500
934,713	1,247,741	27,191,958
-	181,488,580	22,742,942
21,464,751	863,231	5,254,935
1,504,166	389,715	6,603,421
23,903,630	183,989,267	62,057,023
-	2,807,241	15,276,388
-	10,386,878	10,011,502
-	-	-
-	15,886,437	4,520,861
-	126,078,216	31,010,055
83,867,257	27,865,941	1,878,563
-	1,181,614	359,986
-	80,318	31,916
83,867,257	184,286,645	63,089,271
(59,963,627)	(297,378)	(1,032,248)
68,157,578	31,712	5,127,459
(15,000,000)	(94)	(1,297,545)
-	265,760	268,885
53,157,578	297,378	4,098,799
(6,806,049)	-	3,066,551
468,538,348	-	117,673,532
$461,732,299	$ -	$ 120,740,083

STATEMENT OF NET POSITION
INTERNAL SERVICE FUNDS
As of 9/30/2025

Combined Total		Self Insurance	Workers Compensation
	ASSETS		
	Current assets:		
$ 41,908,261	Cash and cash equivalents	$ 13,166,738	$ 6,361,868
2,254,990	Other receivables, net of allowance	63,531	-
778,348	Prepaid expenses and inventory	-	140,000
44,941,599	TOTAL ASSETS	13,230,269	6,501,868
	LIABILITIES		
	Current liabilities:		
687,067	Accounts payable	110,594	187,347
6,016,172	Other liabilities	-	-
4,252,188	Other long term liabilities-current portion	832,246	3,419,942
10,955,427	Total current liabilities	942,840	3,607,289
	Noncurrent liabilities:		
15,315,612	Other noncurrent liabilities	5,939,204	9,376,408
15,315,612	Total noncurrent liabilities	5,939,204	9,376,408
26,271,039	TOTAL LIABILITIES	6,882,044	12,983,697
	NET POSITION		
18,670,560	Unrestricted	6,348,225	(6,481,829)
$ 18,670,560	TOTAL NET POSITION	$ 6,348,225	$ (6,481,829)

County Clerk Professional Liability	District Clerk Professional Liability	Employee Benefits
$ 832,884	$ 462,818	$ 21,083,953
-	-	2,191,459
-	-	638,348
832,884	462,818	23,913,760
-	-	389,126
-	-	6,016,172
-	-	-
-	-	6,405,298
-	-	-
-	-	-
-	-	6,405,298
832,884	462,818	17,508,462
$ 832,884	$ 462,818	$ 17,508,462

STATEMENT OF REVENUES, EXPENSES AND CHANGES IN FUND NET POSITION
INTERNAL SERVICE FUNDS
For the twelve (12) months ended 9/30/2025

Combined Total		Self Insurance	Workers Compensation
	OPERATING REVENUES		
$ 18,901,098	Charges for services - external	$ -	$ -
51,636,420	Charges for services - internal	-	3,787,170
16,729,629	Other revenues	105,777	418,549
87,267,147	TOTAL OPERATING REVENUES	105,777	4,205,719
	OPERATING EXPENSES		
379,487	Building and equipment	377,107	-
96,713,347	Self insurance claims	1,983,130	3,046,064
3,037,263	Insurance premiums	3,049	-
6,877,588	Other expenses	636,127	657,968
107,007,685	TOTAL OPERATING EXPENSES	2,999,413	3,704,032
(19,740,538)	OPERATING INCOME (LOSS)	(2,893,636)	501,687
	NONOPERATING REVENUES		
2,150,799	Investment income	607,605	256,805
2,150,799	TOTAL NONOPERATING REVENUES	607,605	256,805
(17,589,739)	NET INCOME (LOSS) BEFORE TRANSFERS	(2,286,031)	758,492
	OPERATING TRANSFERS		
3,000,000	Transfers in	3,000,000	-
(485,399)	Transfers out	-	-
(15,075,138)	NET INCOME (LOSS)	713,969	758,492
33,745,698	NET POSITION, beginning of year	5,634,256	(7,240,321)
$ 18,670,560	NET POSITION, end of period	$ 6,348,225	$ (6,481,829)

County Clerk Professional Liability	District Clerk Professional Liability	Employee Benefits
$ -	$ 5	$ 18,901,093
-	-	47,849,250
1	-	16,205,302
1	5	82,955,645
-	-	2,380
-	-	91,684,153
-	-	3,034,214
-	52	5,583,441
-	52	100,304,188
1	(47)	(17,348,543)
36,084	20,051	1,230,254
36,084	20,051	1,230,254
36,085	20,004	(16,118,289)
-	-	-
-	-	(485,399)
36,085	20,004	(16,603,688)
796,799	442,814	34,112,150
$ 832,884	$ 462,818	$ 17,508,462

STATEMENT OF FIDUCIARY NET POSITION
FIDUCIARY FUNDS
As of 9/30/2025

Combined Total Fiduciary Funds		State Comptroller Fund	Other Custodial Funds [1]	Community Supervision & Corrections [1]
	ASSETS			
$ 169,442,481	Cash, cash equivalents, and investments	$ 23,289,049	$ 131,969,782	$ 14,183,650
2,715	Fee office receivables (net)	-	1,677	1,038
2,339	Supplies and prepaid items	-	-	2,339
$ 169,447,535	TOTAL ASSETS	$ 23,289,049	$ 131,971,459	$ 14,187,027
	LIABILITIES AND FUND BALANCE			
$ 410,108	Accounts payable	$ -	$ 139,971	$ 270,137
169,037,427	Other liabilities	23,289,049	131,831,488	13,916,890
$ 169,447,535	TOTAL LIABILITIES AND FUND BALANCES	$ 23,289,049	$ 131,971,459	$ 14,187,027

(1) Fiduciary balances reflect the most current information available at time of preparation. Balances for Other Custodial Funds and Community Supervision & Corrections are one month in arrears.

COMBINED SCHEDULE OF CASH RECEIPTS AND DISBURSEMENTS
FIDUCIARY FUNDS

For the twelve (12) months ended 9/30/2025

Combined Total Fiduciary Funds		State Comptroller Fund	Other Custodial Funds [1]	Community Supervision & Corrections [1]
$ 7,329,214,656	Total cash receipts	$ 827,214,639	$ 6,436,507,259	$ 65,492,758
7,283,702,034	Total cash disbursements	823,961,972	6,394,569,346	65,170,716
45,512,622	EXCESS (DEFICIT) RECEIPTS OVER DISBURSEMENTS	3,252,667	41,937,913	322,042
	CASH AND INVESTMENTS			
123,929,859	CASH BALANCE, beginning of year	20,036,382	90,031,869	13,861,608
$ 169,442,481	CASH BALANCE, end of period	$ 23,289,049	$ 131,969,782	$ 14,183,650

NOTE: Cash receipts and disbursements are made between fiduciary funds. Inter-fund receipt/disbursment elimination entries are not made.

(1) Fiduciary balances reflect the most current information available at time of preparation. Balances for Other Custodial Funds and Community Supervision & Corrections are one month in arrears.

I. SUMMARY OF SIGNIFICANT ACCOUNTING POLICIES

Reporting Entity

The accompanying financial statements reflect the funds and accounts of the financial reporting entity Tarrant County, Texas (the "County"), as of September 2025 and for the twelve months then ended. Other components of the County not included in the accompanying financial statements include, Tarrant County Hospital District, Tarrant County Mental Health and Behavioral Health Services, Tarrant County Industrial Development Corporation, Tarrant County Health Facilities Development Corporation, Tarrant County Cultural Education Facilities Finance Corporation, and Tarrant County Housing Financing Corporation. These components are technically a part of the "reporting entity" because of the budgetary oversight responsibility by the Commissioners' Court of Tarrant County. These components however are unrelated to the financial condition and results of operations of the County, and have been excluded from the accompanying financial statements. Separate financial statements of these entities are available upon request.

Revenue Recognition

Revenue is generally recognized on the modified accrual basis. Under this method of accounting, revenues are recognized when susceptible to accrual, i.e., both measurable and available. The primary revenue sources susceptible to accrual are property taxes, fines and fees due to fee offices which are recognized as unavailable revenue until cash is received. Other sources are generally not measurable until received in cash.

Expenditure Recognition

Expenditures are recorded when incurred. Expenditures for principal and interest on long-term debt are recorded when due. The accrual basis of accounting is utilized in the proprietary funds. Encumbrances are not included as expenditures.

Budget Basis Reporting

The budget is prepared utilizing a modified cash basis of accounting, with adjustments for encumbrances, as allowed by state statutes. Budget basis information is presented in the accompanying "Budgetary Information" section at a summary level. Budget information at the legal level of control is available upon request.

Investment Income Allocation

To maximize investment earnings on "idle" cash and cash equivalents, a "pooled cash" concept is utilized. Under this concept nearly all deposits are maintained in the same bank account and are invested on a daily basis. Generally, interest earnings are allocated to each fund based on the funds relative percentage of the total pool.

Pension Liability

The net pension liability was actuarially valued as of December 31, 2023. The net pension liability is reported as $193,660,574 in the annual comprehensive financial report for the fiscal year ended September 30, 2024.

OPEB Liability

The total OPEB liability was actuarially measured as of September 30, 2023. The total OPEB liability is reported as $196,903,485 in the annual comprehensive financial report for the fiscal year ended September 30, 2024.

Compensated Absences

The liability for compensated absences consists of accumulated earned unpaid vacation leave and vested sick pay. An additional amount has been accrued for salary related payments associated with the payment of compensated absences. The amount of compensated absences is reported as $50,841,778 in the annual comprehensive financial report for the fiscal year ended September 30, 2024.

Deferred Outflows/Inflows of Resources

Deferred outflows of resources apply to future periods and will not be recognized as an expense/expenditure until then. Deferred inflows of resources apply to future periods and will be recognized as a revenue at that time.

Incurred but Not Reported

Included in the "Other Liabilities" of the Internal Service fund's Employee Benefits is $6,000,000 of estimated incurred but not reported medical and drug claims.

Leases

The County, as a lessee, recognizes a lease liability and an intangible right to use lease asset as well as capital outlay and other financing source. The County, as lessor, recognizes a lease receivable and a deferred inflow of resources.

Subscription Based Information Technology Arrangements

The County recognizes a subscription liability and an intangible right to use subscription asset as well as capital outlay and other financing source.

II. BASIS OF PRESENTATION

The accounts of the County are organized and operated on the basis of funds, each of which is considered a separate accounting entity. Government resources are allocated to and accounted for in individual funds based on the purpose for which they are to be spent and the means by which spending activities are controlled.

Funds are classified into three categories: Governmental, Proprietary and Fiduciary. Each category is divided into separate fund types. The following fund types are used by the County.

Governmental Funds: Used to account for all or most of a government's general activity. Activity is reported using the current financial resources measurement focus and the modified accrual basis of accounting.

General Fund – used to account for the general operations of the County.

Road and Bridge Fund – used to account for the collection and expenditure of those monies designated to be spent for acquisition, construction and maintenance of county roads and bridges.

Debt Service Fund – used to account for accumulation of resources and for the payment of general long-term debt principal, interest, and related costs.

Capital Projects Funds – used to account for financial resources to be used for the acquisition and/or construction of facilities, equipment, software and infrastructure.

Grant Funds – used to account for the activities conducted under the many grant agreements between the County and various state and federal organizations.

Other Governmental Funds – used to account for specific revenue sources which are legally restricted to expenditures for specified purposes.

Proprietary Funds: Used to account for operations that are financed in a manner similar to those in the private sector. Activity is reported using the economic resources measurement focus and accrual basis of accounting. Internal Service funds are a type of proprietary fund used to account for self insurance activities. The County operates the following five internal service funds.

Self Insurance Fund – used to account for expenditures of bond proceeds received in fiscal year 1998 for the county self insured general liability claims.

Workers Compensation – used to account for workers compensation claims. Prior to the establishment of the self insurance fund, this fund was used for general liability and automobile/property damage claims.

County Clerk Professional Liability Fund – used to account for the County Clerk's errors and omissions self insurance.

District Clerk Professional Liability Fund – used to account for the District Clerk's errors and omissions self insurance.

Employee Benefits Fund – used to account for Tarrant County employee benefits.

Fiduciary Funds: Used to account for assets held by the County in a trustee or agency capacity for others and therefore cannot be used to support the government's own programs.

State Comptroller Funds – used to account for monies received on behalf of, and subsequently remitted to the State Comptroller.

Other Custodial Funds – used to account for assets held in a fiduciary capacity for others and includes property taxes collected and remitted for other entities, statutory fees collected on behalf of other governments, funds held in the registry of the court, collateral for securing bail bonds, monies on account for inmate commissary purchases, and funds seized by law enforcement agencies.

Community Supervision and Corrections – used to account for the State agency funds in the County depository and restitution collected as a condition of probation payable to injured parties.

III. NEGATIVE CASH BALANCES

The following funds have negative cash balances at the balance sheet date. This occurs when expenditures exceed revenue collection. The General Fund has advanced money to these Funds thereby, allowing for continued operation of the related programs. These advances by the General Fund have been reflected in the accompanying combined balance sheet as due from other funds. The advances also represent a loss of investment earnings to the General Fund and are not a reimbursable item by the grantor under reimbursing grant agreements.

Most negative cash balances arise in the County's reimbursing grant programs. These programs require the payment of expenditures prior to the reimbursement by the grantor. These cash deficits have existed for years and do not create any major concerns. However, this information is helpful to the reader of the financial statements to provide a fuller understanding of the details of County operations.

	FUND / GRANT	DEFICIT
E0024	RYAN WHITE ENDING HIV EPIDEMIC	$ 4,518.35
E0025	DHHS-RYAN WHITE TITLE IV PART D - WOMEN, INFANTS, CHILDREN	231.07
E0027	RYAN WHITE PART C - OUTPATIENT EIS PROGRAM	71.84
E0028	RYAN WHITE HIV/AIDS TREATMENT MODERNIZATION ACT PART A	4,749.92
E0031	HIV/STATE SERVICES	165,681.13
E0032	RYAN WHITE PART B	117,472.44
E0037	HIV/HOPWA	33,352.27
E0061	HOUSING OPPORTUNITIES FOR PERSONS WITH AIDS (HOPWA)	21,837.15
F0033	SURVEILLANCE	31.09
F0034	INFECTIOUS DISEASE SURVEILLANCE AND EPIDEMIOLOGY	12,066.64
F0035	HIV/PREVENTION	32,507.69
F0036	DSHS-ENDING THE HIV EPIDEMIC	5,469.37

F0038	STD/HIV OPERATIONS	159,916.17
F0040	COMMUNITY YOUTH DEVELOPMENT PROJECT	135,357.87
F0042	BIOTERRORISM PREPAREDNESS - LAB	5,811.52
F0043	CPS-PREPAREDNESS/HAZARDS (BIO TERRORISM)	87,457.86
F0044	DSHS-C.R.I - CITIES READINESS INITIATIVE	7,556.38
F0046	TUBERCULOSIS - PREVENTION AND CONTROL	118,584.13
F0051	IMMUNIZATIONS	128,650.88
F0058	DSHS - HEALTHY TEXAS BABIES	9,009.22
F0060	WIC CARD PARTICIPATION	1,667,107.01
F0062	ESSENTIAL HEALTH SERVICES OFFICE OF PUBLIC HEALTH PRACTICE	20,652.80
F0081	DSHS-NORTH TEXAS SYNDROMIC SURVEILLANCE PROGRAM	9,625.48
F0093	NURSE FAMILY PARTNERSHIP GRANT	112,474.16
F0102	CDC-HEALTH DISPARITIES / HIGH RISK	23,255.12
F0105	STD/HIV DISEASE INTERVENTION SPECIALISTS (STD/HIV-DIS)	75,803.48
F0108	CDC-STRENGTHEN PUBLIC HEALTH INFRASTRUCTURE, WORKFORCE, DATA	5,392.06
F0118	CDC-STRENGTHEN PUBLIC HEALTH INFRASTRUCTURE, WORKFORCE, DATA	4,467.85
F0140	TDFPS-COMMUNITY YOUTH DEVELOPMENT - INNOVATION GRANT	23,966.70
G0012	VETERANS COURT PROGRAM	22,885.80
G0018	CJD-REACHING INDEPENDENCE THROUGH SELF EMPOWERMENT (RISE)	56,737.07
G0081	VAWA - PROTECTIVE ORDER UNIT	3,922.74
G0084	D.I.R.E.C.T. COURT	32,280.23
G0085	MENTAL HEALTH DIVERSION COURT PROGRAM	17,737.49
G0087	CJD-INTIMATE PARTNER-FAMILY VIOLENCE VICTIM ADVOCATES	57,421.11
G0094	CJD- FAMILY RECOVERY COURT	10,895.62
G0095	CJD- RECONNECTING YOUTH PROGRAM	28,325.64
G0097	CJD - HUMAN TRAFFICKING PROSECUTION UNIT (PASS-THROUGH)	93,595.78
H0001	COMMUNITY DEVELOPMENT - SUPPORTIVE HOUSING	72,140.48
H0040	HOME INVESTMENT PARTNERSHIP ACT - AMERICAN RESCUE PLAN	732,781.38
H0080	COMMUNITY DEVELOPMENT BLOCK GRANT - COVID - CARES	7,579.86
L0013	OJP-DOJ-NIJ-FORENSIC DNA BACKLOG REDUCTION GRANT	52,792.83
L0019	OJP-DOJ-HUMAN TRAFFICKING TASK FORCE	41,494.43
L0020	BJA FIELD INITIATED - ENCOURAGING INNOVATION	150,000.00
L0021	MISSING and UNIDENTIFIED HUMAN REMAINS	10,081.72
M0008	JAG-LAW ENFORCEMENT LIASON PRGM / MHMRTC	17,581.60
M0014	ACCESS AND VISITATION GRANT	16,788.00
M0022	AUTO THEFT TASK FORCE	249,115.84
M0040	HOMELAND SECURITY GRANT PROGRAM	25,444.60
M0044	TXDOT COURTESY PATROL PROGRAM	698,926.25
M0048	BILINGUAL VICTIMS ASSISTANCE COORDINATOR	3,956.78
M0061	TVC-VETERAN'S TREATMENT COURT	1,639.51
M0106	TDEM - FEMA HAZARD MITIGATION - FLOOD STUDY	43,203.73
M0113	US DEPT OF ENERGY-ENERGY EFFICIENCY & CONSERVATION BLOCK GRA	95,608.00
P0011	STATE FINANCIAL ASSISTANCE FUND (BPS)	159,211.49
P0014	TJPC-STATE AID - JUVENILE SUPPLEMENTAL PAY	23,475.94
P0016	TJJD-SPECIAL NEEDS DIVERSIONARY PROGRAM	11,921.81
P0027	TJJD-JJAEP PROGRAM	76,326.54
P0111	STATE FINANCIAL ASSISTANCE FUND (CP)	53,412.28
P0211	STATE FINANCIAL ASSISTANCE FUND	6,540.88
R0001	SECTION 8 - HOUSING ADMIN REVERSE FFY 2004 & AFTER	3,738.46
R0010	SECTION 8 - EMERGENCY HOUSING VOUCHER	102,026.00
R0011	SECTION 8 - FOSTER YOUTH TO INDEPENDENCE	49,072.04
R0012	SECTION 8 - MAINSTREAM VOUCHER PROGRAM	233,518.00
R0013	HUD-SECTION 8 FUND BALANCE	3,760,324.25
R0014	SECTION 8 - HOUSING ADMIN	99,699.84
R0032	SHELTER PLUS CARE	17,967.89
R0112	MAINSTREAM ADMIN FEES	6,219.98

R0310	SECTION 8 - EMERGENCY HOUSING VOUCHER (ADMIN)		5,678.90
		SUB-TOTAL GRANTS	10,145,148.44
G1100	8TH ADMIN JUDICIAL REGION		148.45
T3000	DA - JPS CONTRACT		90,700.15
T3100	TC EMERGENCY SERVICES DISTRICT #1		32,506.14
		TOTAL	$ 10,268,503.18

IV. INVESTMENTS

All securities held and transactions executed during the period conform to the requirements of the Government Code Section 2256, The Public Funds Investment Act, and the Tarrant County Investment Policy, as adopted by the Commissioners Court on November 11, 2025.

	Average Rate		
JPMorgan Chase Savings	4.24%	$	212,985,018
JPMorgan Chase Savings II	4.24%		37,649,774
JPMorgan Chase Checking	4.30%		300,552,055
Texas CLASS Investment Pool	4.35%		118,854,316
TexPool Investment Pool	4.25%		93,461,398
TexPool Prime Investment Pool	4.36%		127,098,349
TOTAL INVESTMENTS		$	890,600,910

The recorded position of the pools for Lone Star and TexPool are measured at amortized cost as these pools meet the requirements of GASB Statement No. 79. The recorded position of the pools for Texas CLASS and TexStar are measured at net asset value and are designed to approximate the share value.

V. CONTINGENCIES

The County is self-insured for workers' compensation, automobile bodily injury and property damage, comprehensive general liability and all self-insured retentions for existing policies. At September 30, 2024, $19,567,800 has been accrued, based on an actuarial assessment, to provide for potential losses resulting from pending or threatened litigation, asserted claims and claims incurred but not reported.

VI. SCHEDULE OF OUTSTANDING BONDED DEBT

Outstanding bonded debt of the County consisted of the following as of September 30, 2025:

	AMOUNT	INTEREST RATES
2015A - Limited Tax Refunding & Improvement Bonds	5,550,000	1.97%
2016 - Limited Tax Refunding Bonds	20,490,000	1.48%
2017 - Limited Tax Refunding Bonds	18,525,000	2.13%
2022A - Limited Tax Refunding Bonds	19,060,000	2.45%
2022B - Limited Tax Refunding Bonds	45,275,000	3.13%
2022 - Limited Tax Bonds	205,150,000	4.00% to 5.00%
Total Outstanding Bonded Debt	314,050,000	

Arbitrage provisions of the Internal Revenue Tax Act of 1986 require the County to rebate excess arbitrage earnings from bond proceeds to the federal government. This amount was estimated to be $4,561,047 as of September 30, 2024.

The following is a summary of annual debt service payments to maturity for the County's bonds as of September 30, 2024. Principal payments are made annually in July. Interest payments are made biannually in January and July.

Fiscal Year	Principal	Interest	Total
2025	31,080,000	12,654,929	43,734,929
2026	30,535,000	11,563,132	42,098,132
2027	25,660,000	10,778,043	36,438,043
2028	22,480,000	10,079,866	32,559,866
2029	16,075,000	9,454,379	25,529,379
2030	16,615,000	8,911,149	25,526,149
2031	13,235,000	8,346,894	21,581,894
2032	13,740,000	7,844,648	21,584,648
2033	14,260,000	7,321,086	21,581,086
2034	12,150,000	6,775,457	18,925,457
2035	12,655,000	6,271,814	18,926,814
2036	8,870,000	5,745,450	14,615,450
2037	9,315,000	5,301,950	14,616,950
2038	9,780,000	4,836,200	14,616,200
2039	10,270,000	4,347,200	14,617,200
2040	10,680,000	3,936,400	14,616,400
2041	11,105,000	3,509,200	14,614,200
2042	11,550,000	3,065,000	14,615,000
2043	12,015,000	2,603,000	14,618,000
2044	12,495,000	2,122,400	14,617,400
2045	12,995,000	1,622,600	14,617,600
2046	13,515,000	1,102,800	14,617,800
2047	14,055,000	562,200	14,617,200
Total:	$ 345,130,000	$ 138,755,797	$ 483,885,797


TARRANT COUNTY, TEXAS

VII. SCHEDULE OF INTERFUND TRANSFERS

The following is a summary of County interfund transfers as of September 30, 2025:

	TRANSFERS IN	TRANSFERS OUT
GENERAL FUND		
Transfers from court house security fund	$ 1,040,964.37	$ -
Transfers from justice court building security fund	8,048.89	-
Transfers from language access fund	233,077.19	-
Transfers to capital replacement fund	-	26,383,728.00
Transfers to cscd bond supervision unit	-	4,242,059.80
Transfers to grants fund	-	16,256.97
Transfers to non-debt capital fund	-	26,773,850.00
Transfers to road and bridge fund	-	6,751,114.00
Transfers to law enforcement task force fund	-	400,000.00
Transfers to self-insurance fund	-	3,000,000.00
TOTAL GENERAL FUND	1,282,090.45	67,567,008.77
ROAD AND BRIDGE FUND		
Transfers from general fund	6,751,114.00	-
Transfers from grants fund	93.94	-
TOTAL ROAD AND BRIDGE FUND	6,751,207.94	-
CAPITAL FUNDS		
NON-DEBT CAPITAL FUND (45100)		
Transfers to capital replacement fund	-	15,000,000.00
Transfers from general fund	26,773,850.00	-
CAPITAL REPLACEMENT FUND (45400)		
Transfers from non-debt capital fund	15,000,000.00	-
Transfers from general fund	26,383,728.00	-
TOTAL CAPITAL FUNDS	68,157,578.00	15,000,000.00
GRANTS FUND		
Transfers from public health fund	15,455.07	-
Transfers from general fund	16,256.97	-
Transfers to road and bridge fund	-	93.94
TOTAL GRANTS FUND	31,712.04	93.94
SPECIAL REVENUE FUNDS		
COURTHOUSE SECURITY FUND (22100)		
Transfers to general fund	-	1,040,964.37
JUSTICE COURT BUILDING SECURITY (22800)		
Transfers to general fund	-	8,048.89
LANGUAGE ACCESS FUND (23600)		
Transfers to general fund	-	233,077.19
PUBLIC HEALTH FUND (T0452)		
Transfers to grants fund	-	15,455.07

VII. SCHEDULE OF INTERFUND TRANSFERS (CONTINUED)

	TRANSFERS IN	TRANSFERS OUT
SPECIAL REVENUE FUNDS (CONTINUED)		
LAW ENFORCEMENT TASK FORCE FUND (S9300)		
Transfers from general fund	400,000.00	-
125 FORFEITURES (T0500)		
Transfers from employee group insurance	485,399.42	-
CSCD BOND SUPERVISION FUND (T3300)		
Transfers from general fund	4,242,059.80	-
TOTAL SPECIAL REVENUE FUNDS	5,127,459.22	1,297,545.52
INTERNAL SERVICE FUNDS		
SELF-INSURANCE FUND (61500)		
Transfers from general fund	3,000,000.00	-
EMPLOYEE GROUP INSURANCE (65100)		
Transfers to 125 forfeitures	-	485,399.42
TOTAL INTERNAL SERVICE FUNDS	3,000,000.00	485,399.42
TOTAL TRANSFERS	$ 84,350,047.65	$ 84,350,047.65


TARRANT COUNTY, TEXAS

CAPITAL PROJECT FUNDS
FUND DESCRIPTIONS

FUND 45100 - NON-DEBT CAPITAL FUND

This fund was established to account for capital acquisitions funded from County auction proceeds, operating transfers from general fund, gas signing bonuses and gas royalties.

FUND 45400 – CAPITAL REPLACEMENT FUND

This fund was established to account for long-term planning replacement of capital assets.

FUND 45500 - COURT FACILITY FUND

This fund was established pursuant to State statutes, to account for the collection and expenditure of monies collected from filing ffes for the construction, renovation, or improvement of facilities that house the courts.

FUND 47600 – 2006 BOND ELECTION FUND

This fund was established to account for the expenditure of the proceeds of General Obligation Bonds issued to fund capital acquisitions originally approved by the voters.

FUND 47700 – 2006 BOND ELECTION-TRANSPORTATION FUND

This fund was established to account for the expenditure of the proceeds of General Obligation Bonds issued to fund transportation projects originally approved by the voters.

FUND 47800 – 2021 BOND ELECTION-TRANSPORTATION FUND

This fund was established to account for the expenditure of the proceeds of General Obligation Bonds issued to fund transportation projects originally approved by the voters.

FUND 51200 – OIL & GAS ROYALTY FUND

This fund was established to account for proceeds from the lease of County mineral rights on the Resource Connection campus.

COMBINING BALANCE SHEET
CAPITAL PROJECTS FUNDS
As of 9/30/2025

Combined Total		Non-Debt Capital	Capital Replacement Fund	Court Facility Fund
	ASSETS			
$ 481,190,417	Cash, cash equivalents, and investments	$ 68,768,054	$ 196,896,086	$ 2,627,270
98,215	Other receivables (net)	91,537	-	-
231,100	Supplies and prepaid items	150,000	81,100	-
$ 481,519,732	TOTAL ASSETS	$ 69,009,591	$ 196,977,186	$ 2,627,270
	LIABILITIES			
19,787,433	Accounts payable	3,109,196	1,379,263	-
19,787,433	TOTAL LIABILITIES	3,109,196	1,379,263	-
	FUND BALANCES			
461,732,299	TOTAL FUND BALANCES	65,900,395	195,597,923	2,627,270
$ 481,519,732	TOTAL LIABILITIES AND FUND BALANCES	$ 69,009,591	$ 196,977,186	$ 2,627,270

2006 Bond Election	2006 Bond Election Transportation	2021 Bond Election Transportation	Oil & Gas Royalty
$ 1,745,565	$ 9,717,252	$ 199,600,594	$ 1,835,596
188	-	-	6,490
-	-	-	-
$ 1,745,753	$ 9,717,252	$ 199,600,594	$ 1,842,086
-	662,223	14,615,552	21,199
-	662,223	14,615,552	21,199
1,745,753	9,055,029	184,985,042	1,820,887
$ 1,745,753	$ 9,717,252	$ 199,600,594	$ 1,842,086

STATEMENT OF REVENUES, EXPENDITURES AND CHANGES IN FUND BALANCES CAPITAL PROJECTS FUNDS

For the twelve (12) months ended 9/30/2025

Combined Total		Non-Debt Capital	Capital Replacement Fund	Court Facility Fund
	REVENUES:			
$ 934,713	Fees of office	$ -	$ -	$ 934,713
21,464,751	Investment income	3,382,464	7,858,495	103,557
1,504,166	Other revenues	1,420,474	319	-
23,903,630	TOTAL REVENUES	4,802,938	7,858,814	1,038,270
	EXPENDITURES:			
83,867,257	Capital outlay	30,902,374	12,313,506	684,373
83,867,257	TOTAL EXPENDITURES	30,902,374	12,313,506	684,373
(59,963,627)	Excess (deficiency) of revenues over (under) expenditures	(26,099,436)	(4,454,692)	353,897
	OTHER FINANCING SOURCES (USES):			
68,157,578	Transfers in	26,773,850	41,383,728	-
(15,000,000)	Transfers out	(15,000,000)	-	-
53,157,578	TOTAL OTHER FINANCING SOURCES (USES)	11,773,850	41,383,728	-
(6,806,049)	CHANGE IN FUND BALANCE	(14,325,586)	36,929,036	353,897
468,538,348	FUND BALANCES, beginning of year	80,225,981	158,668,887	2,273,373
$ 461,732,299	FUND BALANCES, end of period	$ 65,900,395	$ 195,597,923	$ 2,627,270

2006 Bond Election	2006 Bond Election Transportation	2021 Bond Election Transportation	Oil & Gas Royalty
$ -	$ -	$ -	$ -
75,636	558,284	9,402,469	83,846
461	-	-	82,912
76,097	558,284	9,402,469	166,758
304	4,241,072	35,283,189	442,439
304	4,241,072	35,283,189	442,439
75,793	(3,682,788)	(25,880,720)	(275,681)
-	-	-	-
-	-	-	-
-	-	-	-
75,793	(3,682,788)	(25,880,720)	(275,681)
1,669,960	12,737,817	210,865,762	2,096,568
$ 1,745,753	$ 9,055,029	$ 184,985,042	$ 1,820,887

NONMAJOR GOVERNMENTAL FUNDS
SPECIAL REVENUE FUNDS - FUND DESCRIPTIONS

FUND 24100 - LAW LIBRARY FUND

This fund was established, pursuant to State statutes, to account for the collection and expenditure of monies collected in civil cases supporting the Tarrant County Law Library.

FUND 25100 - VEHICLE INVENTORY TAX FUND

This fund was established, pursuant to State statutes, to account for any interest earnings generated from the vehicle inventory tax, which the collector shall retain to defray the cost of collecting this tax. The Tax Assessor has discretion over the use of this fund.

RECORDS PRESERVATION AND TECHNOLOGY FUNDS

These funds were established, pursuant to State statutes, to account for the collection and expenditure of monies collected for the preservation and automation of County records. These funds are further described on page 31.

FUND 24200 - EDUCATION FUND

This fund was established, pursuant to State statutes, to account for the collection and expenditure of monies collected to provide for the continuing education of those officials and employees associated with the probate courts and certain law enforcement offices.

FUND T0400 - PUBLIC HEALTH FUND

The Tarrant County Hospital District provides funding for the operation of the Tarrant County Health Department in an effort to aggregate the cost of health service to Tarrant County residents. This funding arrangement began in 1999. These costs were previously paid from the County's General fund. This fund also includes the Medicaid 1115 Waiver, this waiver is to enhance access to health care, increase the quality of care, improve the cost-effectiveness of care provided and better serve the health of the patients and their families.

FUND 22300 - CONSUMER HEALTH FUND

This fund was established, pursuant to State statutes, to account for the collection of food permit fees and expenditures incurred in connection with issuing permits and conducting inspections.

COURT DESIGNATED FUNDS

These funds were established to account for the collection and expenditures of court ordered fees, pursuant to State statutes. These funds are further described on page 36.

FUNDS D6200, D8700-D8900 - DISTRICT ATTORNEY CONTRACTS

These funds are used to account for monies collected by the District Attorney which are used in the investigation of criminal activities. These monies consist primarily of fees for bad checks and forfeited monies resulting from narcotics related convictions.

FUNDS S4300-S9700 – SHERIFF CONTRACTS

These funds are used to account for monies collected by activities in the Sheriff Department. These activities include fees from operation of the jail commissary which are used for the benefit of the jail inmates. Some of these funds are the custody of the Sheriff. Monies are also collected from forfeitures resulting from narcotics related activities.

FUNDS G1100,T0500-T9900 – MISCELLANEOUS CONTRACTS

These funds are used to account for monies received by Tarrant County as contributions for specified purposes.

COMBINING BALANCE SHEET
OTHER GOVERNMENTAL FUNDS
As of 9/30/2025

Combined Total		Law Library	Vehicle Inventory Tax	Records Preservation & Technology Funds
	ASSETS			
$ 125,774,628	Cash, cash equivalents, and investments	$ 2,594,541	$ 4,877,282	$ 29,428,957
4,224,366	Other receivables (net)	-	-	907
369,496	Supplies and prepaid items	209	-	7,173
$ 130,368,490	TOTAL ASSETS	$ 2,594,750	$ 4,877,282	$ 29,437,037
	LIABILITIES			
$ 7,823,682	Accounts payable	$ 22,601	$ 3,500	$ 4,568,839
1,103,932	Other liabilities	26,436	2,663	82,974
123,355	Due to other funds	-	-	-
36,525	Unearned revenue	-	-	-
9,087,494	TOTAL LIABILITIES	49,037	6,163	4,651,813
	DEFERRED INFLOWS OF RESOURCES			
540,913	Deferred lease inflow	-	-	-
540,913	TOTAL DEFERRED INFLOWS OF RESOURCES	-	-	-
	FUND BALANCES			
120,740,083	TOTAL FUND BALANCES	2,545,713	4,871,119	24,785,224
$ 130,368,490	TOTAL LIABILITIES, DEFERRED INFLOWS OF RESOURCES, AND FUND BALANCES	$ 2,594,750	$ 4,877,282	$ 29,437,037

Education	Public Health	Consumer Health	Court Designated Funds	District Attorney Contracts	Sheriff Contracts	Miscellaneous Contracts
-						
$ 312,780	$ 45,299,130	$ 2,936,478	$ 6,350,476	$ 2,559,769	$ 5,064,658	$ 26,350,557
-	217,403	-	258	14,206	100,678	3,890,914
-	6,493	-	-	-	355,621	-
$ 312,780	$ 45,523,026	$ 2,936,478	$ 6,350,734	$ 2,573,975	$ 5,520,957	$ 30,241,471
-						
$ 32,300	$ 2,428,547	$ 3,053	$ 39,435	$ 40,595	$ 187,249	$ 497,563
-	542,884	64,491	29,283	-	69,647	285,554
-	-	-	-	-	-	123,355
-	-	-	-	-	-	36,525
32,300	2,971,431	67,544	68,718	40,595	256,896	942,997
-						
-	540,913	-	-	-	-	-
-	540,913	-	-	-	-	-
-						
280,480	42,010,682	2,868,934	6,282,016	2,533,380	5,264,061	29,298,474
$ 312,780	$ 45,523,026	$ 2,936,478	$ 6,350,734	$ 2,573,975	$ 5,520,957	$ 30,241,471

STATEMENT OF REVENUES, EXPENDITURES AND CHANGES IN FUND BALANCES OTHER GOVERNMENTAL FUNDS

For the twelve (12) months ended 9/30/2025

Combined Total		Law Library	Vehicle Inventory Tax	Records Preservation & Technology Fund
	REVENUES:			
$ 258,267	Taxes	$ -	$ 258,267	$ -
5,500	Licenses and permits	-	-	-
27,191,958	Fees of office	1,641,335	528,171	5,873,022
22,742,942	Intergovernmental	-	-	-
5,254,935	Investment income	104,945	176,688	1,248,337
6,603,421	Other revenues	45,235	550	7,889
62,057,023	TOTAL REVENUES	1,791,515	963,676	7,129,248
	EXPENDITURES:			
	Current:			
15,276,388	General government	-	146,554	8,882,117
10,011,502	Public safety	-	-	-
4,520,861	Judicial	239,364	-	1,721,821
31,010,055	Community services	1,136,216	-	-
1,878,563	Capital outlay	20,524	65,847	279,381
	Debt service:			
359,986	Principal payments	-	-	49,963
31,916	Interest and fiscal charges	-	-	5,037
63,089,271	TOTAL EXPENDITURES	1,396,104	212,401	10,938,319
(1,032,248)	Excess (deficiency) of revenues over (under) expenditures	395,411	751,275	(3,809,071)
	OTHER FINANCING SOURCES (USES):			
5,127,459	Transfers in	-	-	-
(1,297,545)	Transfers out	-	-	-
268,885	Leases (as lessee)	-	-	268,885
4,098,799	TOTAL OTHER FINANCING SOURCES (USES)	-	-	268,885
3,066,551	CHANGE IN FUND BALANCE	395,411	751,275	(3,540,186)
117,673,532	FUND BALANCES, beginning of year	2,150,302	4,119,844	28,325,410
$ 120,740,083	FUND BALANCES, end of period	$ 2,545,713	$ 4,871,119	$ 24,785,224

Education	Public Health	Consumer Health	Court Designated Funds	District Attorney Contracts	Sheriff Contracts	Miscellaneous Contracts
$ -	$ -	$ -	$ -	$ -	$ -	$ -
-	-	-	-	-	-	5,500
26,476	1,833,205	2,989,233	3,145,031	505	-	11,154,980
176,578	13,147,159	-	168,000	-	-	9,251,205
-	2,121,305	102,090	242,244	118,965	190,179	950,182
-	439,556	5	960	411,378	4,204,104	1,493,744
203,054	17,541,225	3,091,328	3,556,235	530,848	4,394,283	22,855,611
-	3,338,853	-	110,000	-	-	2,798,864
97,093	-	-	-	-	4,122,116	5,792,293
33,195	-	-	1,071,728	569,994	-	884,759
-	19,641,136	1,533,267	-	-	-	8,699,436
-	174,261	216,329	35,843	54,882	799,622	231,874
-	237,180	-	-	-	72,843	-
-	24,891	-	-	-	1,988	-
130,288	23,416,321	1,749,596	1,217,571	624,876	4,996,569	18,407,226
72,766	(5,875,096)	1,341,732	2,338,664	(94,028)	(602,286)	4,448,385
-	-	-	-	-	400,000	4,727,459
-	(15,455)	-	(1,282,090)	-	-	-
-	-	-	-	-	-	-
-	(15,455)	-	(1,282,090)	-	400,000	4,727,459
72,766	(5,890,551)	1,341,732	1,056,574	(94,028)	(202,286)	9,175,844
207,714	47,901,233	1,527,202	5,225,442	2,627,408	5,466,347	20,122,630
$ 280,480	$ 42,010,682	$ 2,868,934	$ 6,282,016	$ 2,533,380	$ 5,264,061	$ 29,298,474


TARRANT COUNTY, TEXAS

RECORDS PRESERVATION FUNDS
FUND DESCRIPTIONS

FUND 21100 - RECORDS PRESERVATION & AUTOMATION FUND - FILINGS

This fund was established, pursuant to State statutes, to account for the collection and expenditure of monies collected from filing fees to allow for the preservation and automation of County records. The County Clerk has discretion over the use of this fund.

FUND 21200 - RECORDS PRESERVATION & AUTOMATION FUND - CONVICTIONS

This fund was established, pursuant to State statutes, to account for the collection and expenditure of monies collected in court for the preservation and automation of County records.

FUND 21300 - RECORDS PRESERVATION & RESTORATION FUND

This fund was established, pursuant to State statutes, to account for the collection and expenditure of monies collected from filing fees for the preservation and restoration of County records.

FUND 21400 - COURT RECORD PRESERVATION FUND

This fund was established, pursuant to State statutes, to account for the collection and expenditure of monies collected from filing fees for the preservation and restoration of County records.

FUND 21500 – DISTRICT COURT RECORDS TECHNOLOGY (ARCHIVE) FUND

This fund was established, pursuant to State statutes, to account for the collection and expenditure of monies collected from filing fees for the preservation and restoration of district court records archives.

FUND 21600 – DISTRICT CLERK RECORDS MANAGEMENT AND PRESERVATION FUND

This fund was established, pursuant to State statutes, to account for the collection and expenditure of monies collected from filing fees for the records management and preservation services by the court clerk.

COMBINING BALANCE SHEET
RECORDS PRESERVATION FUNDS
As of 9/30/2025

Combined Total		Records Preservation & Automation -Filings	Records Preservation & Automation -Convictions	Records Preservation & Restoration
	ASSETS			
$ 29,428,957	Cash, cash equivalents, and investments	$ 13,468,741	$ 99,819	$ 13,042,630
907	Other receivables (net)	117	790	-
7,173	Supplies and prepaid items	-	-	7,173
$ 29,437,037	TOTAL ASSETS	$ 13,468,858	$ 100,609	$ 13,049,803
	LIABILITIES			
$ 4,568,839	Accounts payable	$ 25,869	$ 1,622	$ 4,541,348
82,974	Other liabilities	31,680	-	8,281
4,651,813	TOTAL LIABILITIES	57,549	1,622	4,549,629
	FUND BALANCES			
24,785,224	TOTAL FUND BALANCES	13,411,309	98,987	8,500,174
$ 29,437,037	TOTAL LIABILITIES AND FUND BALANCES	$ 13,468,858	$ 100,609	$ 13,049,803

Court Record Preservation	District Court Records Technology (Archive)	District Clerk Records Management & Preservation
$ 476,260	$ 51,229	$ 2,290,278
-	-	-
-	-	-
$ 476,260	$ 51,229	$ 2,290,278
$ -	$ -	$ -
2,292	-	40,721
2,292	-	40,721
473,968	51,229	2,249,557
$ 476,260	$ 51,229	$ 2,290,278

STATEMENT OF REVENUES, EXPENDITURES AND CHANGES IN FUND BALANCES RECORDS PRESERVATION FUNDS

For the twelve (12) months ended 9/30/2025

Combined Total		Records Preservation & Automation -Filings	Records Preservation & Automation -Convictions	Records Preservation & Restoration
	REVENUES:			
$ 5,873,022	Fees of office	$ 2,480,784	$ 8,088	$ 2,121,672
1,248,337	Investment income	560,060	4,090	565,324
7,889	Other revenues	3,162	3,719	5
7,129,248	TOTAL REVENUES	3,044,006	15,897	2,687,001
	EXPENDITURES:			
	Current:			
8,882,117	General government	1,112,952	-	7,769,165
1,721,821	Judicial	573,206	-	-
279,381	Capital outlay	10,496	-	268,885
	Debt service:			
49,963	Principal payments	-	-	49,963
5,037	Interest and fiscal charges	-	-	5,037
10,938,319	TOTAL EXPENDITURES	1,696,654	-	8,093,050
(3,809,071)	Excess (deficiency) of revenues over (under) expenditures	1,347,352	15,897	(5,406,049)
	OTHER FINANCING SOURCES (USES):			
268,885	Leases (as lessee)	-	-	268,885
268,885	TOTAL OTHER FINANCING SOURCES (USES)	-	-	268,885
(3,540,186)	CHANGE IN FUND BALANCE	1,347,352	15,897	(5,137,164)
28,325,410	FUND BALANCES, beginning of year	12,063,957	83,090	13,637,338
$ 24,785,224	FUND BALANCES, end of period	$ 13,411,309	$ 98,987	$ 8,500,174

Court Record Preservation	District Court Records Technology (Archive)	District Clerk Records Management & Preservation
$ 2,414	$ 2,659	$ 1,257,405
21,424	4,654	92,785
827	176	-
24,665	7,489	1,350,190
-	-	-
37,682	80,550	1,030,383
-	-	-
-	-	-
-	-	-
37,682	80,550	1,030,383
(13,017)	(73,061)	319,807
-	-	-
-	-	-
(13,017)	(73,061)	319,807
486,985	124,290	1,929,750
$ 473,968	$ 51,229	$ 2,249,557

COURT DESIGNATED FUNDS
FUND DESCRIPTIONS

FUND 22100 - COURTHOUSE SECURITY FUND

This fund was established, pursuant to State statutes, to account for the collection of Courthouse security fees assessed in court cases. Revenue is subsequently transferred to the general fund where expenditures for Courthouse security are recorded.

FUND 22400 – JUVENILE DELINQUENCY PREVENTION FUND

This fund was established, pursuant to State statutes, to account for the collection of a fee related to graffiti court cases. The revenues in this fund are to be used to repair damages, provide educational and intervention programs, and provide rewards to the public for aiding in the apprehension and prosecution of offenders who commit graffiti offenses.

FUND 22500 - ALTERNATIVE DISPUTE RESOLUTION SYSTEM (ADRS)

This fund was established, pursuant to State statutes, to account for an alternative dispute resolution system for the peaceable and expeditious resolution of citizen disputes.

FUND 22600 – PROBATE CONTRIBUTIONS FUND

This fund was established, pursuant to State statutes, to account for the collection of a fee under Section 51.704. The revenues in this fund are to be used for court-related purposes for the support of the statutory probate courts.

FUND 24300 - APPELLATE JUDICIAL SYSTEM FUND

This fund was established, pursuant to State statutes, to account for the collection and expenditure of monies collected in civil cases to provide for a portion of the operational costs of the Court of Appeals.

FUND 22700 – JUSTICE COURT TECHNOLOGY FUND

This fund was established, pursuant to State statutes, to account for the collection and expenditure of monies to provide for technology in the justice of the peace courts.

FUND 22800 – JUSTICE COURT BUILDING SECURITY FUND

This fund was established, pursuant to State statutes, to account for the collection and expenditure of monies to provide for security in the justice court buildings.

FUND 22900 – CHILD ABUSE PREVENTION FUND

This fund was established, pursuant to State statutes, to account for the collection and expenditure of monies to provide for child abuse prevention programs.

FUND 23000 – FAMILY PROTECTION FUND

This fund was established, pursuant to State statutes, to account for the collection and expenditure of monies to provide for family protection services.

FUND 23100 – GUARDIANSHIP FUND

This fund was established, pursuant to State statutes, to account for the collection and expenditure of monies to provide compensation of a guardian ad litem, an attorney ad litem, and/or fund local guardianship programs for indigent incapacitated persons.

FUND 23200 – DRUG AND ALCOHOL COURT FUND

This fund was established, pursuant to State statutes, to account for the collection and expenditure of monies to provide for drug and alcohol court program.

FUND 23300 – COUNTY AND DISTRICT COURT TECHNOLOGY FUND

This fund was established, pursuant to State statutes, to account for the collection and expenditure of monies to provide for county and district court technology.

FUND 23400 – SPECIALTY COURT FUND

This fund was established, pursuant to State statutes, to account for the collection and expenditure of monies to provide for eligible specialty court programs.

FUND 23500 – TRUANCY PREVENTION AND DIVERSION FUND

This fund was established, pursuant to State statutes, to account for the collection and expenditure of monies to provide for a juvenile case manager and implement programs to prevent or reduce juvenile referrals to the court.

FUND 23600 – LANGUAGE ACCESS FUND

This fund was established, pursuant to State statutes, to account for the collection and expenditure of monies to provide language access services for individuals appearing before the court or receiving court services.

COMBINING BALANCE SHEET (CONTINUED)
COURT DESIGNATED FUNDS
As of 9/30/2025

Combined Total		Courthouse Security	Juvenile Delinquency Prevention	ADRS
	ASSETS			
$ 6,350,476	Cash, cash equivalents, and investments	$ -	$ 5,552	$ 3,608,641
258	Other receivables (net)	-	-	-
$ 6,350,734	TOTAL ASSETS	$ -	$ 5,552	$ 3,608,641
	LIABILITIES			
$ 39,435	Accounts payable	$ -	$ -	$ 10,016
29,283	Other liabilities	-	-	17,244
68,718	TOTAL LIABILITIES	-	-	27,260
	FUND BALANCES			
6,282,016	TOTAL FUND BALANCES	-	5,552	3,581,381
$ 6,350,734	TOTAL LIABILITIES AND FUND BALANCES	$ -	$ 5,552	$ 3,608,641

Probate Contribution Fund	Appellate Judicial System	Justice Court Technology Fund	Justice Court Bldg Security Fund	Child Abuse Prevention Fund	Family Protection Fund	Guardianship Fund	Drug & Alcohol Court
$ 1,145,940	$ 57,109	$ 315,683	$ -	$ 39,089	$ 60	$ 165,643	$ 113,581
-	-	190	-	-	-	-	-
$ 1,145,940	$ 57,109	$ 315,873	$ -	$ 39,089	$ 60	$ 165,643	$ 113,581
$ -	$ 26,351	$ -	$ -	$ -	$ -	$ -	$ -
4,427	4,795	-	-	-	-	-	-
4,427	31,146	-	-	-	-	-	-
1,141,513	25,963	315,873	-	39,089	60	165,643	113,581
$ 1,145,940	$ 57,109	$ 315,873	$ -	$ 39,089	$ 60	$ 165,643	$ 113,581

COMBINING BALANCE SHEET (CONCLUDED)
COURT DESIGNATED FUNDS
As of 9/30/2025

	County & District Court Technology Fund	Specialty Court Fund	Truancy Prevention & Diversion Fund	Language Access Fund
ASSETS				
Cash, cash equivalents, and investments	$ 330,773	$ 37,527	$ 188,710	$ 342,168
Other receivables (net)	68	-	-	-
TOTAL ASSETS	$ 330,841	$ 37,527	$ 188,710	$ 342,168
LIABILITIES				
Accounts payable	$ -	$ 3,068	$ -	$ -
Other liabilities	-	2,817	-	-
TOTAL LIABILITIES	-	5,885	-	-
FUND BALANCES				
TOTAL FUND BALANCES	330,841	31,642	188,710	342,168
TOTAL LIABILITIES AND FUND BALANCES	$ 330,841	$ 37,527	$ 188,710	$ 342,168


TARRANT COUNTY, TEXAS

STATEMENT OF REVENUES, EXPENDITURES AND CHANGES IN FUND BALANCES (CONTINUED) - COURT DESIGNATED FUNDS

For the twelve (12) months ended 9/30/2025

Combined Total		Courthouse Security	Juvenile Delinquency Prevention	ADRS
	REVENUES:			
$ 3,145,031	Fees of office	$ 1,040,964	$ 2,199	$ 1,099,593
168,000	Intergovernmental	-	-	-
242,244	Investment income	-	171	144,091
960	Other revenues	-	-	-
3,556,235	TOTAL REVENUES	1,040,964	2,370	1,243,684
	EXPENDITURES:			
	Current:			
110,000	General government	-	-	-
1,071,728	Judicial	-	-	519,629
35,843	Capital outlay	-	-	35,843
1,217,571	TOTAL EXPENDITURES	-	-	555,472
2,338,664	Excess (deficiency) of revenues over (under) expenditures	1,040,964	2,370	688,212
	OTHER FINANCING SOURCES (USES):			
(1,282,090)	Transfers out	(1,040,964)	-	-
(1,282,090)	TOTAL OTHER FINANCING SOURCES (USES)	(1,040,964)	-	-
1,056,574	CHANGE IN FUND BALANCE	-	2,370	688,212
5,225,442	FUND BALANCES, beginning of year	-	3,182	2,893,169
$ 6,282,016	FUND BALANCES, end of period	$ -	$ 5,552	$ 3,581,381

Probate Contribution Fund	Appellate Judicial System	Justice Court Technology Fund	Justice Court Bldg Security Fund	Child Abuse Prevention Fund	Family Protection Fund	Guardianship Fund	Drug & Alcohol Court
$ -	$ 233,786	$ 26,533	$ 8,049	$ 6,290	$ -	$ 112,099	$ 3,373
168,000	-	-	-	-	-	-	-
47,507	1,930	13,071	-	1,626	-	5,278	4,849
-	-	529	-	-	-	-	-
215,507	235,716	40,133	8,049	7,916	-	117,377	8,222
-	-	-	-	-	-	110,000	-
147,027	234,017	-	-	-	-	-	-
-	-	-	-	-	-	-	-
147,027	234,017	-	-	-	-	110,000	-
68,480	1,699	40,133	8,049	7,916	-	7,377	8,222
-	-	-	(8,049)	-	-	-	-
-	-	-	(8,049)	-	-	-	-
68,480	1,699	40,133	-	7,916	-	7,377	8,222
1,073,033	24,264	275,740	-	31,173	60	158,266	105,359
$ 1,141,513	$ 25,963	$ 315,873	$ -	$ 39,089	$ 60	$ 165,643	$ 113,581

STATEMENT OF REVENUES, EXPENDITURES AND CHANGES IN FUND BALANCES (CONCLUDED) - COURT DESIGNATED FUNDS

For the twelve (12) months ended 9/30/2025

	County & District Court Technology Fund	Specialty Court Fund	Truancy Prevention & Diversion Fund	Language Access Fund
REVENUES:				
Fees of office	$ 32,918	$ 169,608	$ 31,550	$ 378,069
Intergovernmental	-	-	-	-
Investment income	13,578	2,683	7,460	-
Other revenues	431	-	-	-
TOTAL REVENUES	46,927	172,291	39,010	378,069
EXPENDITURES:				
Current:				
General government	-	-	-	-
Judicial	-	171,055	-	-
Capital outlay	-	-	-	-
TOTAL EXPENDITURES	-	171,055	-	-
Excess (deficiency) of revenues over (under) expenditures	46,927	1,236	39,010	378,069
OTHER FINANCING SOURCES (USES):				
Transfers out	-	-	-	(233,077)
TOTAL OTHER FINANCING SOURCES (USES)	-	-	-	(233,077)
CHANGE IN FUND BALANCE	46,927	1,236	39,010	144,992
FUND BALANCES, beginning of year	283,914	30,406	149,700	197,176
FUND BALANCES, end of period	$ 330,841	$ 31,642	$ 188,710	$ 342,168


TARRANT COUNTY, TEXAS

SUMMARY OF CASH AND INVESTMENTS
GOVERNMENTAL, PROPRIETARY, AND FIDUCIARY FUNDS
As of 9/30/2025

	BEGINNING CASH BALANCE September 2025	INCREASE (DECREASE) FOR September 2025	ENDING CASH BALANCE September 2025
GOVERNMENTAL FUNDS:			
MAJOR FUNDS			
General Fund	$ 204,828,446	(44,260,063)	$ 160,568,383
Road and Bridge	27,004,761	(80,079)	26,924,682
Debt Service	1,936,610	13,213	1,949,823
Capital Projects	484,700,220	(3,509,803)	481,190,417
Grant Funds	63,440,712	(5,788,523)	57,652,189
Other Governmental Funds	125,514,331	260,297	125,774,628
TOTAL GOVERNMENTAL FUNDS	907,425,080	(53,364,958)	854,060,122
PROPRIETARY FUNDS:			
INTERNAL SERVICE FUNDS			
Self Insurance	13,160,516	6,222	13,166,738
Workers Compenstation	5,961,584	400,284	6,361,868
County Clerk Professional Liability	829,956	2,928	832,884
District Clerk Professional Liability	461,186	1,632	462,818
Employee Benefits	21,639,284	(555,331)	21,083,953
TOTAL PROPRIETARY FUNDS	42,052,526	(144,265)	41,908,261
FIDUCIARY FUNDS:			
State Comptroller Fund	16,294,427	6,994,622	23,289,049
Other Custodial Funds	175,519,965	(43,550,183)	131,969,782
Community Supervision & Corrections	11,088,631	3,095,019	14,183,650
TOTAL FIDUCIARY FUNDS	202,903,023	(33,460,542)	169,442,481
TOTAL GOVERNMENTAL, PROPRIETARY, AND FIDUCIARY FUNDS:	$ 1,152,380,629	(86,969,765)	$ 1,065,410,864

TARRANT COUNTY

BUDGETARY INFORMATION


TARRANT COUNTY, TEXAS

SUMMARY BUDGET VERSUS ACTUAL (BUDGET BASIS)
REVENUE AND EXPENDITURES (TAX SUPPORTED FUNDS) (CONTINUED)
For the twelve (12) months ended 9/30/2025

	Current Month Actual	YTD Actual	Budget	Percent	Last Year Percent
GENERAL FUND					
REVENUES:					
Taxes	$ 71,393	$ 467,423,538	$ 468,942,909	99.68%	98.59%
Licenses	76,238	1,396,370	1,400,000	99.74%	OVER 100%
Fees of Office	3,542,337	75,083,770	71,070,100	OVER 100%	OVER 100%
Intergovernmental	4,051,921	35,748,137	34,960,977	OVER 100%	OVER 100%
Investment Income	769,409	14,967,386	16,703,000	89.61%	OVER 100%
Other Revenues	2,041,801	16,032,662	11,904,079	OVER 100%	OVER 100%
Transfers	129,086	1,282,090	1,215,000	OVER 100%	91.87%
Contingent	-	-	5,000,000		
Cash Carryforward	-	154,164,398	146,829,432		
Total Revenues	$ 10,682,185	$ 766,098,351	$ 758,025,497	OVER 100%	OVER 100%
EXPENDITURES:					
Personnel	$ 36,813,367	$ 436,044,816	$ 437,929,167	99.57%	96.96%
Other	19,633,808	146,034,713	159,403,108	91.61%	84.08%
Transfers	5,459,132	67,550,752	68,588,999	98.49%	100.00%
Grant Match and Subsidy	228,875	2,478,405	4,092,071	60.57%	50.35%
Undesignated	-	-	12,152		
Contingent	-	-	5,000,000		
Reserves	-	-	83,000,000		
Total Expenditures	$ 62,135,182	$ 652,108,686	$ 758,025,497	86.03%	82.86%
ROAD & BRIDGE FUND					
REVENUES:					
Taxes	$ -	$ 32	$ -	OVER 100%	OVER 100%
Fees of Office	1,669,510	19,775,290	18,621,850	OVER 100%	OVER 100%
Intergovernmental	28,099	91,120	56,000	OVER 100%	OVER 100%
Investment Income	92,580	1,155,221	800,000	OVER 100%	OVER 100%
Other Revenues	128,284	1,021,260	205,000	OVER 100%	OVER 100%
Transfers	562,687	6,751,208	6,751,114	OVER 100%	100.00%
Cash Carryforward	-	19,666,480	16,677,822		
Total Revenues	$ 2,481,160	$ 48,460,611	$ 43,111,786	OVER 100%	OVER 100%
EXPENDITURES:					
Personnel	$ 1,518,053	$ 17,993,173	$ 19,773,178	91.00%	90.35%
Other	2,306,148	12,669,312	22,442,500	56.45%	55.37%
Grant Match and Subsidy	-	-	356,100	0.00%	8.92%
Undesignated	-	-	540,008		
Total Expenditures	$ 3,824,201	$ 30,662,485	$ 43,111,786	71.12%	71.97%

SUMMARY BUDGET VERSUS ACTUAL (BUDGET BASIS)
REVENUE AND EXPENDITURES (TAX SUPPORTED FUNDS) (CONCLUDED)
For the twelve (12) months ended 9/30/2025

	Current Month Actual	YTD Actual	Budget	Percent	Last Year Percent
DEBT SERVICE FUND					
REVENUES:					
Taxes	$ 6,435	$ 43,465,909	$ 43,018,031	OVER 100%	97.89%
Investment Income	6,779	855,399	850,000	OVER 100%	OVER 100%
Cash Carryforward	-	1,366,769	1,374,598		
Total Revenues	$ 13,214	$ 45,688,077	$ 45,242,629	OVER 100%	98.64%
EXPENDITURES:					
Principal	$ -	$ 31,080,000	$ 31,080,000	100.00%	100.00%
Interest and fees	-	12,658,254	12,662,629	99.97%	99.99%
Reserves	-	-	1,500,000		
Total Expenditures	$ -	$ 43,738,254	$ 45,242,629	96.67%	95.70%

GENERAL FUND FEES OF OFFICE ANALYSIS (BUDGET BASIS)

For the twelve (12) months ended 9/30/2025

FEE OFFICE	Actual Revenue	Annual Budget	Percent Collected	Last Year Percent
Tax Assesor/Collector	$ 44,918,057	$ 43,568,800	OVER 100%	OVER 100%
County Clerk	12,168,296	11,392,800	OVER 100%	OVER 100%
Sheriff	404,536	310,900	OVER 100%	78.01%
Constable 1	761,420	750,000	OVER 100%	OVER 100%
Constable 2	1,117,245	1,150,000	97.15%	OVER 100%
Constable 3	527,715	540,000	97.73%	OVER 100%
Constable 4	578,428	480,000	OVER 100%	OVER 100%
Constable 5	658,332	660,000	99.75%	OVER 100%
Constable 6	555,616	525,000	OVER 100%	OVER 100%
Constable 7	1,012,008	950,000	OVER 100%	OVER 100%
Constable 8	1,027,334	1,000,000	OVER 100%	OVER 100%
District Clerk	5,215,597	4,585,000	OVER 100%	OVER 100%
Domestic Relations	950,034	874,600	OVER 100%	94.96%
District Attorney	120,122	105,000	OVER 100%	98.61%
Justice of the Peace 1	228,585	200,000	OVER 100%	OVER 100%
Justice of the Peace 2	373,027	340,000	OVER 100%	OVER 100%
Justice of the Peace 3	189,883	155,000	OVER 100%	OVER 100%
Justice of the Peace 4	272,623	190,000	OVER 100%	OVER 100%
Justice of the Peace 5	230,258	190,000	OVER 100%	98.18%
Justice of the Peace 6	228,908	200,000	OVER 100%	OVER 100%
Justice of the Peace 7	395,034	320,000	OVER 100%	OVER 100%
Justice of the Peace 8	320,168	250,000	OVER 100%	OVER 100%
County Courts	23,979	23,000	OVER 100%	OVER 100%
Medical Examiner	2,245,456	1,810,000	OVER 100%	OVER 100%
Other	561,109	500,000	OVER 100%	OVER 100%
TOTAL	$ 75,083,770	$ 71,070,100	OVER 100%	OVER 100%
RATABLE COLLECTION PERCENTAGE			100.00%	

GENERAL FUND (CONTINUED)
BUDGET REPORT BY DEPARTMENT
For the twelve (12) months ended 9/30/2025

	Current Month Expenditures	Encumbrances & Commitments	Total Expenditures Encumbrances & Commitments	Total Budget	Unexpended Budget	% Budget Used
GENERAL FUND (10000)						
County Judge	$ 88,501	$ -	$ 1,134,749	$ 1,169,229	$ 34,480	97.05%
County Administrator	171,580	1,256	2,055,505	2,452,657	397,152	83.81%
Communications	21,919	-	309,565	390,131	80,566	79.35%
Emergency Management	10,709	-	200,275	282,731	82,456	70.84%
Non-Departmental	6,363,682	42,554	81,117,484	83,698,451	2,580,967	96.92%
Auditor	671,295	484	8,053,789	8,135,883	82,094	98.99%
Budget/Risk Management	155,749	50	1,809,613	1,864,213	54,600	97.07%
Tax Assessor / Collector	1,428,536	182,775	17,874,635	17,981,129	106,494	99.41%
Elections Administration	2,792,091	129,323	9,392,347	11,840,739	2,448,392	79.32%
Information Technology	3,940,452	906,855	52,649,610	59,321,988	6,672,378	88.75%
Human Resources	426,298	91,266	3,455,573	3,889,684	434,111	88.84%
Purchasing	230,179	240	2,791,465	2,842,486	51,021	98.21%
Facilities	628,511	160,950	7,281,583	7,515,200	233,617	96.89%
Sheriff	6,306,743	822,884	68,098,290	64,937,830	(3,160,460)	104.87%
Sheriff - Confinement	11,508,912	1,989,725	120,116,473	115,840,936	(4,275,537)	103.69%
Constable Precinct 1	134,118	48	1,613,054	1,602,954	(10,100)	100.63%
Constable Precinct 2	131,522	990	1,596,078	1,627,457	31,379	98.07%
Constable Precinct 3	152,846	3,904	1,886,257	1,890,600	4,343	99.77%
Constable Precinct 4	106,488	4,517	1,296,873	1,318,774	21,901	98.34%
Constable Precinct 5	109,661	459	1,286,023	1,249,213	(36,810)	102.95%
Constable Precinct 6	91,827	1,748	1,083,932	1,123,948	40,016	96.44%
Constable Precinct 7	143,033	4,549	1,765,471	1,761,837	(3,634)	100.21%
Constable Precinct 8	147,452	608	1,669,448	1,696,246	26,798	98.42%
Medical Examiner	1,293,942	116,457	15,227,404	15,830,429	603,025	96.19%
Fire Marshal	41,449	591	409,610	461,252	51,642	88.80%
Community Supervision	433,408	30	4,242,257	4,832,307	590,050	87.79%
Juvenile Services	2,247,309	764,554	25,984,348	26,560,843	576,495	97.83%
Buildings	4,803,181	948,931	31,271,463	31,679,927	408,464	98.71%
Resource Connection	108,169	2,095	918,631	1,276,074	357,443	71.99%
17TH District Court	30,808	547	322,363	330,030	7,667	97.68%
48TH District Court	27,682	-	333,416	332,712	(704)	100.21%
67TH District Court	26,714	-	330,784	330,823	39	99.99%
96TH District Court	27,458	115	357,400	354,929	(2,471)	100.70%
141ST District Court	34,619	523	351,943	344,665	(7,278)	102.11%
153RD District Court	33,165	787	362,813	363,173	360	99.90%
236TH District Court	28,741	48	335,641	340,142	4,501	98.68%
342ND District Court	26,762	273	323,283	336,991	13,708	95.93%
348TH District Court	28,020	-	329,097	334,003	4,906	98.53%
352ND District Court	29,797	-	327,525	333,682	6,157	98.15%
Criminal District Court 1	216,247	29	2,404,380	2,477,187	72,807	97.06%
Criminal District Court 2	371,957	29	3,064,090	3,141,220	77,130	97.54%
Criminal District Court 3	326,021	-	4,608,817	4,590,212	(18,605)	100.41%
Criminal District Court 4	260,573	29	2,330,368	2,329,650	(718)	100.03%
213TH District Court	329,659	-	2,964,961	3,083,552	118,591	96.15%
297TH District Court	304,911	-	2,498,339	2,514,429	16,090	99.36%
371ST District Court	757,476	33	3,466,297	3,457,257	(9,040)	100.26%
372ND District Court	332,564	10	3,010,168	3,005,942	(4,226)	100.14%
396TH District Court	251,088	264	2,564,114	2,624,625	60,511	97.69%
432ND District Court	152,678	-	2,876,479	2,999,231	122,752	95.91%

GENERAL FUND (CONTINUED)
BUDGET REPORT BY DEPARTMENT
For the twelve (12) months ended 9/30/2025

	Current Month Expenditures	Encumbrances & Commitments	Total Expenditures Encumbrances & Commitments	Total Budget	Unexpended Budget	% Budget Used
GENERAL FUND (10000)						
485TH District Court	$ 286,109	$ 29	$ 3,176,515	$ 3,173,619	(2,896)	100.09%
Magistrate Court	232,405	628	2,605,336	2,727,422	122,086	95.52%
231ST District Court	100,235	-	1,398,864	1,484,868	86,004	94.21%
233RD District Court	145,200	-	1,869,119	2,163,505	294,386	86.39%
322ND District Court	124,877	-	1,271,186	1,267,262	(3,924)	100.31%
323RD District Court	214,294	-	2,197,323	2,497,015	299,692	88.00%
324TH District Court	79,599	-	1,249,772	1,277,511	27,739	97.83%
325TH District Court	94,286	-	1,211,068	1,214,053	2,985	99.75%
360TH District Court	171,471	-	1,374,037	1,367,887	(6,150)	100.45%
Criminal Court Administration	458,918	971	5,495,953	5,318,842	(177,111)	103.33%
Grand Jury	24,767	-	260,887	257,417	(3,470)	101.35%
Criminal Attorney Appointment	47,697	-	678,981	682,560	3,579	99.48%
Criminal Mental Health Court	31,112	-	182,227	278,878	96,651	65.34%
County Court at Law #1	85,337	42	708,472	697,794	(10,678)	101.53%
County Court at Law #2	58,393	30	664,887	683,834	18,947	97.23%
County Court at Law #3	44,483	224	607,777	732,790	125,013	82.94%
County Criminal Court 1	122,790	-	1,255,637	1,260,303	4,666	99.63%
County Criminal Court 2	96,692	-	1,072,749	1,074,834	2,085	99.81%
County Criminal Court 3	96,716	-	1,073,368	1,067,281	(6,087)	100.57%
County Criminal Court 4	87,438	-	1,089,831	1,103,030	13,199	98.80%
County Criminal Court 5	202,867	-	1,259,664	1,281,087	21,423	98.33%
County Criminal Court 6	108,496	29	1,160,471	1,158,095	(2,376)	100.21%
County Criminal Court 7	95,773	29	1,053,955	1,064,004	10,049	99.06%
County Criminal Court 8	104,445	59	1,082,412	1,087,077	4,665	99.57%
County Criminal Court 9	107,227	29	1,047,645	1,054,611	6,966	99.34%
County Criminal Court 10	71,375	414	947,706	970,114	22,408	97.69%
Probate Court 1	227,390	-	2,289,747	2,369,595	79,848	96.63%
Probate Court 2	170,406	49	1,976,135	1,963,050	(13,085)	100.67%
Justice of the Peace Pct 1	85,447	6	999,214	1,003,378	4,164	99.59%
Justice of the Peace Pct 2	81,846	521	1,007,171	1,020,496	13,325	98.69%
Justice of the Peace Pct 3	84,664	621	986,122	987,341	1,219	99.88%
Justice of the Peace Pct 4	73,629	4	856,202	848,941	(7,261)	100.86%
Justice of the Peace Pct 5	84,151	1,954	946,997	931,633	(15,364)	101.65%
Justice of the Peace Pct 6	81,534	444	934,983	957,901	22,918	97.61%
Justice of the Peace Pct 7	94,164	882	1,049,118	1,094,455	45,337	95.86%
Justice of the Peace Pct 8	89,809	1,046	974,759	1,027,260	52,501	94.89%
Crim District Attorney	4,111,269	704	48,055,337	49,650,731	1,595,394	96.79%
District Clerk	1,043,101	3,182	12,304,788	12,629,073	324,285	97.43%
County Clerk	1,035,373	1,261	12,768,695	14,339,052	1,570,357	89.05%
Domestic Relations	717,049	575	8,373,470	8,770,636	397,166	95.47%
Jury Services	307,447	86,472	3,203,343	3,215,884	12,541	99.61%
Courts / Judiciary	42,793	-	526,414	717,189	190,775	73.40%
Human Services	371,894	38,847	4,078,812	4,311,818	233,006	94.60%
Child Protective Services	615,913	-	2,429,980	2,654,108	224,128	91.56%
Public Assistance	-	-	330,061	379,062	49,001	87.07%

GENERAL FUND (CONCLUDED)
BUDGET REPORT BY DEPARTMENT
For the twelve (12) months ended 9/30/2025

	Current Month Expenditures	Encumbrances & Commitments	Total Expenditures Encumbrances & Commitments	Total Budget	Unexpended Budget	% Budget Used
GENERAL FUND (10000)						
Texas AgriLife Extension	$ 60,931	$ -	$ 780,379	$ 850,972	$ 70,593	91.70%
Veterans Services	55,947	-	656,561	693,719	37,158	94.64%
Historical Commission	25,725	-	319,349	320,726	1,377	99.57%
Comm Pct 1 - General	113,307	-	1,406,059	1,479,372	73,313	95.04%
Comm Pct 2 - General	131,428	-	1,492,712	1,595,952	103,240	93.53%
Comm Pct 3 - General	81,805	657	864,697	1,300,029	435,332	66.51%
Comm Pct 4 - General	91,740	426	1,080,464	1,133,377	52,913	95.33%
Fleet Services	448,041	110,510	3,188,787	4,030,228	841,441	79.12%
GENERAL FUND - CASH MATCH (10010)						
Sheriff	$ -	$ -	$ 96,303	$ 179,639	$ 83,336	53.61%
Criminal Court Administration	-	-	-	8,000	8,000	0.00%
Crim District Attorney	11,018	-	53,875	53,908	33	99.94%
GENERAL FUND - OPERATING SUBSIDY (10020)						
County Administrator	$ -	$ -	$ 16	$ 16	$ 0	100.00%
Sheriff	3,619	-	4,937	15,000	10,063	32.91%
Juvenile Services	109,388	1,541	1,977,286	3,357,042	1,379,756	58.90%
Criminal Court Administration	9,723	-	9,723	75,000	65,277	12.96%
Criminal District Attorney	95,127	-	314,675	381,876	67,201	82.40%
Public Assistance	-	-	21,590	21,590	-	100.00%
SUBTOTAL	62,135,182	6,432,716	652,108,686	670,013,345	17,904,659	97.33%
NON-SPENDABLE (10000)						
Undesignated				$ 12,152	$ 12,152	
Contingent Expense				5,000,000	5,000,000	
Reserves				83,000,000	83,000,000	
GENERAL FUND TOTAL	$ 62,135,182	$ 6,432,716	$ 652,108,686	$ 758,025,497	$ 105,916,811	86.03%

ROAD & BRIDGE AND DEBT SERVICE BUDGET REPORT BY DEPARTMENT

For the twelve (12) months ended 9/30/2025

	Current Month Expenditures	Encumbrances & Commitments	Total Expenditures Encumbrances & Commitments	Total Budget	Unexpended Budget	% Budget Used
ROAD AND BRIDGE (26100)						
Pct 1 - Garage/Maintenance	$ 803,908	$ 767,414	$ 8,364,118	$ 12,099,078	$ 3,734,960	69.13%
Pct 2 - Garage/Maintenance	676,440	159,037	4,097,425	6,218,786	2,121,361	65.89%
Pct 3 - Garage/Maintenance	807,557	29,065	4,055,091	4,599,384	544,293	88.17%
Pct 4 - Garage/Maintenance	1,255,727	1,105,911	9,138,637	10,485,489	1,346,852	87.16%
Right of Way	(14,841)	-	1,405,071	4,072,973	2,667,902	34.50%
Transportation	276,618	519,278	3,217,515	4,267,468	1,049,953	75.40%
Road & Bridge Non-Departmental	18,792	-	384,628	472,500	87,872	81.40%
ROAD AND BRIDGE - GRANT MATCH (26110)						
Transportation	-	-	-	356,100	356,100	0.00%
SUBTOTAL	3,824,201	2,580,705	30,662,485	42,571,778	11,909,293	72.03%
NON-SPENDABLE (26100)						
Undesignated				540,008	540,008	
ROAD AND BRIDGE FUND TOTAL	$ 3,824,201	$ 2,580,705	$ 30,662,485	$ 43,111,786	$ 12,449,301	71.12%
DEBT SERVICE (32100)						
Interest and Sinking	-	-	43,738,254	43,742,629	4,375	99.99%
SUBTOTAL	-	-	43,738,254	43,742,629	4,375	99.99%
NON-SPENDABLE (32100)						
Reserves				1,500,000	1,500,000	
DEBT SERVICE FUND TOTAL	$ -	$ -	$ 43,738,254	$ 45,242,629	$ 1,504,375	96.67%

SPECIAL BUDGETS (CONTINUED)
BUDGET VERSUS ACTUAL (BUDGET BASIS) REVENUE
For the twelve (12) months ended 9/30/2025

Fund #	Fund Name	Actual Revenue	Budgeted Revenue	Percent Collected
21100	Records Preservation/Automation-Filing	$ 3,044,005	$ 2,750,000	OVER 100%
21200	Records Preservation/Automation-Conviction	15,897	-	OVER 100%
21300	Records Preservation/Restoration	2,687,001	2,262,250	OVER 100%
21400	Court Record Preservation Fund	24,666	-	OVER 100%
21500	District Court Records Technology Fund	7,490	5,270	OVER 100%
21600	District Clerk Record Mgt & Preservation	1,350,190	1,030,920	OVER 100%
22100	Courthouse Security Fund	1,040,964	1,073,876	96.94%
22300	Consumer Health Fund	3,090,228	1,822,500	OVER 100%
22400	Juvenile Delinquency Prevention	2,371	132	OVER 100%
22500	Alternative Dispute Resolution	1,243,684	1,019,000	OVER 100%
22600	Probate Contributions Fund	215,507	122,500	OVER 100%
22700	Justice Court Technology Fund	40,133	35,625	OVER 100%
22800	Justice Court Building Security	8,049	8,793	91.54%
22900	Child Abuse Prevention Fund	7,916	7,000	OVER 100%
23100	Guardianship	117,377	122,250	96.01%
23200	Drug & Alcohol Court	8,222	-	OVER 100%
23300	County and District Court Technology Fund	46,927	39,475	OVER 100%
23400	Specialty Courts Fund	172,291	161,275	OVER 100%
23500	Truancy Prevention and Diversion Fund	39,010	32,050	OVER 100%
23600	Language Access	378,068	337,000	OVER 100%
24100	Law Library	1,791,514	1,475,000	OVER 100%
24200	Education Fund	203,053	122,971	OVER 100%
24300	Appellate Judicial System	235,716	234,763	OVER 100%
25100	Vehicle Inventory Tax	963,676	854,946	OVER 100%
45100	Non-Debt Capital	31,582,662	28,798,850	OVER 100%
45400	Capital Replacement Fund (Non-Debt)	49,242,542	46,082,728	OVER 100%
45500	Court Facility	1,038,270	845,000	OVER 100%
47600	2006 Bond Election - Buildings	76,096	42,500	OVER 100%
47700	2006 Bond Election - Transportation	558,284	297,500	OVER 100%
47800	2021 Bond Election - Transportation	9,402,469	6,587,500	OVER 100%
51200	Oil & Gas Royalty Resource Connection	166,758	135,000	OVER 100%
61500	Self Insurance	3,713,383	3,467,500	OVER 100%
61900	Workers Compensation	4,462,524	4,009,500	OVER 100%
62100	County Clerk Professional Liability	36,084	33,975	OVER 100%
62200	District Clerk Professional Liability	20,004	12,750	OVER 100%
65100	Employee Group Insurance - Medical	95,820,192	84,889,259	OVER 100%
D6200	DA Restitution Collection Fee	505	-	OVER 100%
D8700	CDA State Forfeiture	488,938	85,000	OVER 100%
D8800	CDA Federal Forfeiture Justice Funds	41,404	5,950	OVER 100%
G1100	8TH Admin Judicial Region	862	10,000	8.62%
S8700	Sheriff's Inmate Commissary Fund	3,744,137	2,807,496	OVER 100%
S9300	Combined Narcotics Enforcement Team	448,660	400,000	OVER 100%
S9500	Sheriff Federal Forfeiture-Treasury Funds	345,440	6,750	OVER 100%
S9600	Sheriff Federal Forfeiture-Non DEA	68,428	11,475	OVER 100%
S9700	Sheriff Federal Forfeiture-Justice Funds	187,620	10,215	OVER 100%

SPECIAL BUDGETS (CONCLUDED)
BUDGET VERSUS ACTUAL (BUDGET BASIS) REVENUE
For the twelve (12) months ended 9/30/2025

Fund #	Fund Name	Actual Revenue	Budgeted Revenue	Percent Collected
T0400	Public Health	$ 15,563,907	$ 15,942,159	97.63%
T0450	Public Health 1115 Waiver	1,544,583	-	OVER 100%
T0500	Section 125 Forfeitures	610,266	90,000	OVER 100%
T0600	Children's Home Fund	4,752	3,885	OVER 100%
T0700	Bail Bond Board	5,500	8,500	64.71%
T0800	TDPRS - Title IVE	74,047	6,975	OVER 100%
T0900	Constable Forfeiture	4,680	918	OVER 100%
T1000	Juvenile Probation District	12,691	9,900	OVER 100%
T1100	Unclaimed Juvenile Restitution	1,363	531	OVER 100%
T1300	Deferred Prosecution Program	29,896	46,000	64.99%
T2000	Historical Commission	214	200	OVER 100%
T2100	Historical Commission Archives	1,110	723	OVER 100%
T2300	Cemetery Fund	2,069	1,912	OVER 100%
T2600	Unclaimed Electrifc Coop Credits	1,183,675	97,750	OVER 100%
T2900	Fire Marshal Code	222,283	183,150	OVER 100%
T3000	DA - JPS Contract	723,258	745,115	97.07%
T3100	Emergency Services District #1	52,400	91,577	57.22%
T3300	CSCD Bond Supervision Unit	5,496,444	6,097,560	90.14%
T3400	Courts Drug Program	36,104	41,625	86.74%
T3700	Medical Examiner Conference Fund	1,184	850	OVER 100%
T4100	PMC Insured - 340B	11,856,138	8,170,000	OVER 100%
T5200	Miscellaneous Donations-Juvenile Probation	2,245	510	OVER 100%
T5350	Donations Emergency Management	366	340	OVER 100%
T5600	Miscellaneous Donations - Human Services	70,847	70,170	OVER 100%
T5640	Human Services - Reliant Energy	15,265	20,044	76.16%
T5700	Miscellaneous Donations-CPS	26,002	23,400	OVER 100%
T5800	Miscellaneous Donations-Health Dept	11,721	1,530	OVER 100%
T5960	Miscellaneous Donations-Veteran Court Program	15,445	978	OVER 100%
T6000	Miscellaneous Donations-Family Court	1,089	1,088	OVER 100%
T6100	Miscellaneous Donations-CRCG	1,873	1,063	OVER 100%
T6200	Miscellaneous Donations-Peace Officers Memorial	4,667	4,165	OVER 100%
T6500	ATTF Rental Assoc Donation	14	13	OVER 100%
T7000	Sheriff's Employee Recognition and Award	73	69	OVER 100%
T7100	Contract Elections	2,432,839	5,110,000	47.61%
T7300	Elections Chapter 19	177,992	545,079	32.65%
T8500	Opioid Epidemic Settlement	4,297,509	170,000	OVER 100%
T8600	Public Improvement District	1,879	-	OVER 100%
	TOTAL SPECIAL PURPOSE FUNDS	$ 262,665,607	$ 229,544,323	OVER 100%

SPECIAL PURPOSE
BUDGET REPORT EXPENDITURE (BUDGET BASIS)
For the twelve (12) months ended 9/30/2025

	Current Month Expenditures	Encumbrances & Commitments	Total Expenditures Encumbrances & Commitments	Total Budget	Unexpended Budget	% Budget Used
RECORDS PRESERVATION & AUTOMATION - FILINGS (21100)						
County Clerk	182,351	25,000	1,496,629	12,663,905	11,167,276	11.82%
FUND TOTAL	$ 182,351	$ 25,000	$ 1,496,629	$ 12,663,905	$ 11,167,276	11.82%
RECORDS PRESERVATION & AUTOMATION - CONVICTIONS (21200)						
Information Technology	-	-	-	82,304	82,304	0.00%
FUND TOTAL	$ -	$ -	$ -	$ 82,304	$ 82,304	0.00%
RECORDS PRESERVATION & RESTORATION (21300)						
County Clerk	4,560,334	1,551,252	6,411,261	12,528,324	6,117,063	51.17%
FUND TOTAL	$ 4,560,334	$ 1,551,252	$ 6,411,261	$ 12,528,324	$ 6,117,063	51.17%
COURT RECORD PRESERVATION FUND (21400)						
District Clerk	3,995	-	37,682	464,217	426,535	8.12%
FUND TOTAL	$ 3,995	$ -	$ 37,682	$ 464,217	$ 426,535	8.12%
DISTRICT COURT RECORD TECHNOLOGY FUND (21500)						
District Clerk	-	8,950	89,500	129,610	40,110	69.05%
FUND TOTAL	$ -	$ 8,950	$ 89,500	$ 129,610	$ 40,110	69.05%
DISTRICT CLERK RECORD MANAGEMENT & PRESERVATION FUND (21600)						
District Clerk	88,934	-	1,030,383	2,906,011	1,875,628	35.46%
FUND TOTAL	$ 88,934	$ -	$ 1,030,383	$ 2,906,011	$ 1,875,628	35.46%

SPECIAL PURPOSE
BUDGET REPORT EXPENDITURE (BUDGET BASIS)
For the twelve (12) months ended 9/30/2025

	Current Month Expenditures	Encumbrances & Commitments	Total Expenditures Encumbrances & Commitments	Total Budget	Unexpended Budget	% Budget Used
COURTHOUSE SECURITY FUND (22100)						
Non-Departmental	97,371	-	1,040,964	1,073,876	32,912	96.94%
FUND TOTAL	$ 97,371	$ -	$ 1,040,964	$ 1,073,876	$ 32,912	96.94%
CONSUMER HEALTH FUND (22300)						
Public Health	149,871	193	1,740,678	2,975,801	1,235,123	58.49%
FUND TOTAL	$ 149,871	$ 193	$ 1,740,678	$ 2,975,801	$ 1,235,123	58.49%
JUVENILE DELINQUENCY PREVENTION (22400)						
Juvenile Services	-	-	-	3,314	3,314	0.00%
FUND TOTAL	$ -	$ -	$ -	$ 3,314	$ 3,314	0.00%
DISPUTE RESOLUTION (22500)						
Information Technology	-	-	17,160	17,160	-	100.00%
Dispute Resolution	55,611	13,299	551,611	3,813,673	3,262,062	14.46%
FUND TOTAL	$ 55,611	$ 13,299	$ 568,771	$ 3,830,833	$ 3,262,062	14.85%
PROBATE CONTRIBUTIONS FUND (22600)						
Probate Court 1	4,737	-	69,006	624,483	555,477	11.05%
Probate Court 2	4,330	-	78,020	531,506	453,486	14.68%
FUND TOTAL	$ 9,067	$ -	$ 147,026	$ 1,155,989	$ 1,008,963	12.72%
JUSTICE COURT TECHNOLOGY FUND (22700)						
Information Technology	-	-	-	300,042	300,042	0.00%
FUND TOTAL	$ -	$ -	$ -	$ 300,042	$ 300,042	0.00%

SPECIAL PURPOSE
BUDGET REPORT EXPENDITURE (BUDGET BASIS)
For the twelve (12) months ended 9/30/2025

	Current Month Expenditures	Encumbrances & Commitments	Total Expenditures Encumbrances & Commitments	Total Budget	Unexpended Budget	% Budget Used
JUSTICE COURT BLDG SECURITY (22800)						
Non-Departmental	729	-	8,049	8,793	744	91.54%
FUND TOTAL	$ 729	$ -	$ 8,049	$ 8,793	$ 744	91.54%
CHILD ABUSE PREVENTION FUND (22900)						
Non-Departmental	-	-	-	33,169	33,169	0.00%
233RD District Court	-	-	-	5,000	5,000	0.00%
FUND TOTAL	$ -	$ -	$ -	$ 38,169	$ 38,169	0.00%
GUARDIANSHIP (23100)						
Non-Departmental	-	-	110,000	280,726	170,726	39.18%
FUND TOTAL	$ -	$ -	$ 110,000	$ 280,726	$ 170,726	39.18%
DRUG & ALCOHOL COURT (23200)						
Criminal Court Administration	-	-	-	62,520	62,520	0.00%
FUND TOTAL	$ -	$ -	$ -	$ 62,520	$ 62,520	0.00%
COUNTY & DISTRICT COURT TECHNOLOGY FUND (23300)						
Information Technology	-	-	-	323,074	323,074	0.00%
FUND TOTAL	$ -	$ -	$ -	$ 323,074	$ 323,074	0.00%
SPECIALTY COURTS FUND (23400)						
Criminal Court Administration	61,579	-	171,056	174,659	3,603	97.94%
FUND TOTAL	$ 61,579	$ -	$ 171,056	$ 174,659	$ 3,603	97.94%

SPECIAL PURPOSE
BUDGET REPORT EXPENDITURE (BUDGET BASIS)
For the twelve (12) months ended 9/30/2025

	Current Month Expenditures	Encumbrances & Commitments	Total Expenditures Encumbrances & Commitments	Total Budget	Unexpended Budget	% Budget Used
TRUANCY PREVENTION & DIVERSION FUND (23500)						
233RD District Court	-	-	-	180,656	180,656	0.00%
FUND TOTAL	$ -	$ -	$ -	$ 180,656	$ 180,656	0.00%
LANGUAGE ACCESS FUND (23600)						
Non-Departmental	30,985	-	233,077	529,569	296,492	44.01%
FUND TOTAL	$ 30,985	$ -	$ 233,077	$ 529,569	$ 296,492	44.01%
LAW LIBRARY (24100)						
Law Library	108,867	2,326	1,159,106	2,840,103	1,680,997	40.81%
Judicial Law Library	27,493	-	239,364	365,000	125,636	65.58%
FUND TOTAL	$ 136,360	$ 2,326	$ 1,398,470	$ 3,205,103	$ 1,806,633	43.63%
EDUCATION FUND (24200)						
Sheriff	20,810	-	47,901	85,852	37,951	55.79%
Sheriff - Confinement	1,364	-	49,191	52,972	3,781	92.86%
Constable Precinct 1	-	-	2,210	4,405	2,195	50.17%
Constable Precinct 2	-	-	735	8,510	7,775	8.64%
Constable Precinct 3	-	-	2,609	6,405	3,796	40.73%
Constable Precinct 4	-	-	-	4,196	4,196	0.00%
Constable Precinct 5	-	-	4,123	8,717	4,594	47.30%
Constable Precinct 6	-	-	-	10,091	10,091	0.00%
Constable Precinct 7	1,389	-	5,242	10,615	5,373	49.38%
Constable Precinct 8	-	-	-	7,364	7,364	0.00%
Fire Marshal	-	-	-	2,077	2,077	0.00%
Probate Court 1	(191)	-	3,286	40,000	36,714	8.22%
Probate Court 2	3,293	-	5,185	40,000	34,815	12.96%
Crim District Attorney	630	-	5,244	7,826	2,582	67.01%
Courts / Judiciary	-	-	4,560	5,200	640	87.69%
FUND TOTAL	$ 27,295	$ -	$ 130,286	$ 294,230	$ 163,944	44.28%

SPECIAL PURPOSE
BUDGET REPORT EXPENDITURE (BUDGET BASIS)
For the twelve (12) months ended 9/30/2025

	Current Month Expenditures	Encumbrances & Commitments	Total Expenditures Encumbrances & Commitments	Total Budget	Unexpended Budget	% Budget Used
APPELLATE JUDICIAL SYSTEM (24300)						
Appeals Court	36,116	-	234,017	259,763	25,746	90.09%
FUND TOTAL	$ 36,116	$ -	$ 234,017	$ 259,763	$ 25,746	90.09%
VEHICLE INVENTORY TAX (25100)						
Tax Assessor / Collector	16,334	-	204,876	4,731,042	4,526,166	4.33%
FUND TOTAL	$ 16,334	$ -	$ 204,876	$ 4,731,042	$ 4,526,166	4.33%
NON-DEBT CAPITAL (45100)						
County Administrator	-	-	6,937	22,000	15,063	31.53%
Communications	-	-	9,588	17,000	7,412	56.40%
Non-Departmental	1,250,000	-	15,000,944	22,292,561	7,291,617	67.29%
Auditor	-	-	6,234	7,167	933	86.98%
Budget and Risk Management	-	-	10,768	15,000	4,232	71.79%
Tax Assessor / Collector	-	673	47,338	55,175	7,837	85.80%
Elections Administration	(6,778)	125,605	616,025	972,830	356,805	63.32%
Information Technology	169,452	162,267	2,292,303	6,329,658	4,037,355	36.22%
Human Resources	1,631	-	2,624	8,283	5,659	31.68%
Purchasing	-	-	7,395	7,431	36	99.52%
Facilities	29,240	-	377,659	1,175,961	798,302	32.11%
Sheriff	376,411	690,549	1,834,932	2,801,038	966,106	65.51%
Sheriff - Confinement	-	-	292,609	336,736	44,127	86.90%
Constable Precinct 1	-	3,715	7,277	14,715	7,438	49.45%
Constable Precinct 2	-	-	9,582	10,008	426	95.74%
Constable Precinct 3	30,854	-	46,391	48,000	1,609	96.65%
Constable Precinct 4	-	-	1,228	1,250	22	98.24%
Constable Precinct 5	11,145	-	39,717	40,093	376	99.06%
Constable Precinct 6	-	-	-	24,500	24,500	0.00%
Constable Precinct 7	12,073	3,752	22,852	24,400	1,548	93.66%
Constable Precinct 8	-	10,156	16,350	87,050	70,700	18.78%
Medical Examiner	111	-	77,940	383,713	305,773	20.31%
Community Supervision	1,391	-	58,926	70,546	11,620	83.53%
Juvenile Services	-	-	49,295	49,582	287	99.42%
Buildings	1,360,828	9,182,226	12,810,019	33,841,446	21,031,427	37.85%
17TH District Court	-	-	6,424	7,200	776	89.22%
48TH District Court	-	-	-	7,500	7,500	0.00%
342ND District Court	-	-	6,303	6,350	47	99.26%

SPECIAL PURPOSE
BUDGET REPORT EXPENDITURE (BUDGET BASIS)
For the twelve (12) months ended 9/30/2025

	Current Month Expenditures	Encumbrances & Commitments	Total Expenditures Encumbrances & Commitments	Total Budget	Unexpended Budget	% Budget Used
NON-DEBT CAPITAL (45100) (CONTINUED)						
233RD District Court	-	-	-	5,000	5,000	0.00%
322ND District Court	-	-	5,181	5,600	419	92.52%
Criminal Court Administration	-	18,583	28,237	35,100	6,863	80.45%
CCL #1	-	-	4,034	4,053	19	99.53%
CCL #2	-	-	-	1,600	1,600	0.00%
Probate Court 2	-	-	5,082	6,700	1,618	75.85%
Justice of the Peace Pct 1	-	-	4,340	6,250	1,910	69.44%
Justice of the Peace Pct 2	1,018	-	9,265	11,037	1,772	83.94%
Justice of the Peace Pct 4	-	-	4,507	4,507	-	100.00%
Justice of the Peace Pct 5	-	-	7,317	7,490	173	97.69%
Justice of the Peace Pct 6	-	-	4,494	5,349	855	84.02%
Crim District Attorney	-	-	73,499	82,688	9,189	88.89%
District Clerk	-	218	167,844	167,848	4	100.00%
County Clerk	-	-	4,676	30,075	25,399	15.55%
Domestic Relations	-	-	2,434	5,230	2,796	46.54%
Courts / Judiciary	-	-	18,768	54,109	35,341	34.69%
Human Services	-	-	2,590	2,750	160	94.18%
Historical Commission	-	-	3,385	3,400	15	99.56%
Commissioner Precinct 2	2,940	-	10,154	24,200	14,046	41.96%
Commissioner Precinct 4	-	-	7,472	10,000	2,528	74.72%
Pct 1 - Garage/Maintenance	17,827	82,985	4,147,487	5,566,988	1,419,501	74.50%
Pct 2 - Garage/Maintenance	93,858	292,954	1,856,542	7,080,614	5,224,072	26.22%
Pct 3 - Garage/Maintenance	17,402	537,100	853,258	1,140,925	287,667	74.79%
Pct 4 - Garage/Maintenance	-	14,826	1,457,941	4,488,236	3,030,295	32.48%
Transportation	-	17,024	29,726	34,420	4,694	86.36%
FUND TOTAL	$ 3,369,403	$ 11,142,633	$ 42,365,893	$ 87,441,362	$ 45,075,469	48.45%
CAPITAL REPLACEMENT FUND (NON-DEBT) (45400)						
Non-Departmental	-	-	-	3,071,446	3,071,446	0.00%
Elections Administration	-	-	-	2,000,000	2,000,000	0.00%
Information Technology	62,652	443,629	3,002,784	22,957,171	19,954,387	13.08%
Facilities	-	-	-	60,493,457	60,493,457	0.00%
Buildings	690,640	3,211,549	5,666,393	83,385,920	77,719,527	6.80%
Pct 4 - Garage/Maintenance	183,676	1,614,380	1,834,107	10,828,694	8,994,587	16.94%
Transportation	140,443	410,287	972,193	4,554,034	3,581,841	21.35%
FUND TOTAL	$ 1,077,411	$ 5,679,845	$ 11,475,477	$ 187,290,722	$ 175,815,245	6.13%

SPECIAL PURPOSE
BUDGET REPORT EXPENDITURE (BUDGET BASIS)
For the twelve (12) months ended 9/30/2025

	Current Month Expenditures	Encumbrances & Commitments	Total Expenditures Encumbrances & Commitments	Total Budget	Unexpended Budget	% Budget Used
COURT FACILITY (45500)						
Facilities	-	790	4,022	2,292,355	2,288,333	0.18%
FUND TOTAL	$ -	$ 790	$ 4,022	$ 2,292,355	$ 2,288,333	0.18%
2006 BOND ELECTION-BUILDINGS (47600)						
Non-Departmental	-	-	304	225,560	225,256	0.13%
Buildings	-	-	-	1,280,070	1,280,070	0.00%
FUND TOTAL	$ -	$ -	$ 304	$ 1,505,630	$ 1,505,326	0.02%
2006 BOND ELECTION-TRANSPORTATION (47700)						
Non-Departmental	-	-	352	10,000	9,648	3.52%
Transportation	330,965	1,249,612	2,285,737	6,704,300	4,418,563	34.09%
FUND TOTAL	$ 330,965	$ 1,249,612	$ 2,286,089	$ 6,714,300	$ 4,428,211	34.05%
2021 BOND ELECTION-TRANSPORTATION (47800)						
Non-Departmental	-	-	1,600	19,102,704	19,101,104	0.01%
Transportation	11,107,314	40,075,708	54,474,015	156,872,258	102,398,243	34.73%
FUND TOTAL	$ 11,107,314	$ 40,075,708	$ 54,475,615	$ 175,974,962	$ 121,499,347	30.96%

SPECIAL PURPOSE
BUDGET REPORT EXPENDITURE (BUDGET BASIS)
For the twelve (12) months ended 9/30/2025

	Current Month Expenditures	Encumbrances & Commitments	Total Expenditures Encumbrances & Commitments	Total Budget	Unexpended Budget	% Budget Used
OIL & GAS ROYALTY (51200)						
Buildings	-	-	423,985	2,200,103	1,776,118	19.27%
Resource Connection	-	-	18,454	18,500	46	99.75%
FUND TOTAL	$ -	$ -	$ 442,439	$ 2,218,603	$ 1,776,164	19.94%
SELF INSURANCE (61500)						
Self Insurance	143,116	284,132	3,154,149	15,258,484	12,104,335	20.67%
FUND TOTAL	$ 143,116	$ 284,132	$ 3,154,149	$ 15,258,484	$ 12,104,335	20.67%
WORKERS COMPENSATION/SELF INSURANCE (61900)						
Self Insurance	533,073	25,595	3,722,692	9,507,230	5,784,538	39.16%
FUND TOTAL	$ 533,073	$ 25,595	$ 3,722,692	$ 9,507,230	$ 5,784,538	39.16%
COUNTY CLERK PROFESSIONAL LIABILITY (62100)						
County Clerk	-	-	-	830,857	830,857	0.00%
FUND TOTAL	$ -	$ -	$ -	$ 830,857	$ 830,857	0.00%
DISTRICT CLERK PROFESSIONAL LIABILITY (62200)						
District Clerk	-	60,000	60,000	410,277	350,277	14.62%
FUND TOTAL	$ -	$ 60,000	$ 60,000	$ 410,277	$ 350,277	14.62%
EMPLOYEE GROUP INSURANCE - MEDICAL (65100)						
Non-Departmental	-	-	598,144	6,411,000	5,812,856	9.33%
Self Insurance	10,461,398	-	111,824,208	113,281,862	1,457,654	98.71%
FUND TOTAL	$ 10,461,398	$ -	$ 112,422,352	$ 119,692,862	$ 7,270,510	93.93%

SPECIAL PURPOSE
BUDGET REPORT EXPENDITURE (BUDGET BASIS)
For the twelve (12) months ended 9/30/2025

	Current Month Expenditures	Encumbrances & Commitments	Total Expenditures Encumbrances & Commitments	Total Budget	Unexpended Budget	% Budget Used
AMERICAN RESCUE PLAN ACT (CARPA)						
CARPA	3,229,972	10,340,123	27,895,058	30,375,000	2,479,942	91.84%
FUND TOTAL	$ 3,229,972	$ 10,340,123	$ 27,895,058	$ 30,375,000	$ 2,479,942	91.84%
DISTRICT ATTORNEY RESTITUTION COLLECTION FEE (D6200)						
Crim District Attorney	-	-	950	10,529	9,579	9.02%
FUND TOTAL	$ -	$ -	$ 950	$ 10,529	$ 9,579	9.02%
CRIMINAL DISTRICT ATTORNEY STATE FORFEITURE (D8700)						
Crim District Attorney	186,759	5,315	618,076	1,942,380	1,324,304	31.82%
Buildings	8,004	4,256	12,260	425,000	412,740	2.88%
FUND TOTAL	$ 194,763	$ 9,571	$ 630,336	$ 2,367,380	$ 1,737,044	26.63%
CRIMINAL DISTRICT ATTORNEY FEDERAL FORFEITURE JUSTICE FUNDS (D8800)						
Crim District Attorney	3,186	-	3,186	145,521	142,335	2.19%
FUND TOTAL	$ 3,186	$ -	$ 3,186	$ 145,521	$ 142,335	2.19%
8TH ADMIN JUDICIAL REGION (G1100)						
8th Admin Judicial Region	102	-	862	10,000	9,138	8.62%
FUND TOTAL	$ 102	$ -	$ 862	$ 10,000	$ 9,138	8.62%

SPECIAL PURPOSE
BUDGET REPORT EXPENDITURE (BUDGET BASIS)
For the twelve (12) months ended 9/30/2025

	Current Month Expenditures	Encumbrances & Commitments	Total Expenditures Encumbrances & Commitments	Total Budget	Unexpended Budget	% Budget Used
SHERIFF'S INMATE COMMISSARY (S8700)						
Sheriff - Confinement	271,035	60,289	3,701,121	5,523,738	1,822,617	67.00%
FUND TOTAL	$ 271,035	$ 60,289	$ 3,701,121	$ 5,523,738	$ 1,822,617	67.00%
COMBINED NARCOTICS ENFORCEMENT TEAM (S9300)						
Sheriff	74,567	147,032	690,221	918,000	227,779	75.19%
FUND TOTAL	$ 74,567	$ 147,032	$ 690,221	$ 918,000	$ 227,779	75.19%
SHERIFF FEDERAL FORFEITURE-TREASURY (S9500)						
Sheriff	10,683	34,620	154,966	166,750	11,784	92.93%
FUND TOTAL	$ 10,683	$ 34,620	$ 154,966	$ 166,750	$ 11,784	92.93%
SHERIFF DRUG FORFEITURE-NON DEA (S9600)						
Sheriff	7,569	-	61,407	303,112	241,705	20.26%
FUND TOTAL	$ 7,569	$ -	$ 61,407	$ 303,112	$ 241,705	20.26%
SHERIFF FEDERAL FORFEITURE-JUSTICE (S9700)						
Sheriff	526	-	138,882	355,504	216,622	39.07%
FUND TOTAL	$ 526	$ -	$ 138,882	$ 355,504	$ 216,622	39.07%

SPECIAL PURPOSE
BUDGET REPORT EXPENDITURE (BUDGET BASIS)
For the twelve (12) months ended 9/30/2025

	Current Month Expenditures	Encumbrances & Commitments	Total Expenditures Encumbrances & Commitments	Total Budget	Unexpended Budget	% Budget Used
PUBLIC HEALTH (T0400)						
T0400 - PUBLIC HEALTH						
Buildings	391,158	174,216	1,694,472	2,681,761	987,289	63.19%
Public Health	1,257,450	359,231	15,501,161	24,071,628	8,570,467	64.40%
T0450 - PUBLIC HEALTH - 1115 WAIVER						
Non-Departmental	1,799,615	3,240,962	6,579,815	29,152,917	22,573,102	22.57%
Public Health	247,615	10,531	2,426,920	3,434,566	1,007,646	70.66%
T0451 - PUBLIC HEALTH - 1115 WAIVER - CASH MATCH						
Public Health	95,965	-	337,437	416,000	78,563	81.11%
T0452 - PUBLIC HEALTH - 1115 WAIVER - OPERATING SUBSIDY						
Public Health	231,390	-	735,708	2,000,000	1,264,292	36.79%
FUND TOTAL	$ 4,023,193	$ 3,784,940	$ 27,275,513	$ 61,756,872	$ 34,481,359	44.17%
SECTION 125 FORFEITURES (T0500)						
Self Insurance	15,059	17,673	147,847	2,187,048	2,039,201	6.76%
FUND TOTAL	$ 15,059	$ 17,673	$ 147,847	$ 2,187,048	$ 2,039,201	6.76%

SPECIAL PURPOSE
BUDGET REPORT EXPENDITURE (BUDGET BASIS)
For the twelve (12) months ended 9/30/2025

	Current Month Expenditures	Encumbrances & Commitments	Total Expenditures Encumbrances & Commitments	Total Budget	Unexpended Budget	% Budget Used
CHILDREN'S HOME FUND (T0600)						
Juvenile Services	-	-	5,519	81,265	75,746	6.79%
FUND TOTAL	$ -	$ -	$ 5,519	$ 81,265	$ 75,746	6.79%
BAIL BOND BOARD (T0700)						
Non-Departmental	1,395	-	7,173	12,221	5,048	58.69%
FUND TOTAL	$ 1,395	$ -	$ 7,173	$ 12,221	$ 5,048	58.69%
TDRPS - TITLE IVE (T0800)						
Child Protective Services	10,230	1,384	91,597	142,335	50,738	64.35%
FUND TOTAL	$ 10,230	$ 1,384	$ 91,597	$ 142,335	$ 50,738	64.35%
CONSTABLE FORFEITURE (T0900)						
Constable Precinct 7	-	-	6,869	8,452	1,583	81.27%
FUND TOTAL	$ -	$ -	$ 6,869	$ 8,452	$ 1,583	81.27%
JUVENILE PROBATION DISTRICT (T1000)						
Juvenile Services	640	-	16,296	244,991	228,695	6.65%
FUND TOTAL	$ 640	$ -	$ 16,296	$ 244,991	$ 228,695	6.65%
UNCLAIMED JUVENILE RESTITUTION (T1100)						
Juvenile Services	33	-	40	13,024	12,984	0.31%
FUND TOTAL	$ 33	$ -	$ 40	$ 13,024	$ 12,984	0.31%

SPECIAL PURPOSE
BUDGET REPORT EXPENDITURE (BUDGET BASIS)
For the twelve (12) months ended 9/30/2025

	Current Month Expenditures	Encumbrances & Commitments	Total Expenditures Encumbrances & Commitments	Total Budget	Unexpended Budget	% Budget Used
DEFERRED PROSECUTION PROGRAM (T1300)						
Crim District Attorney	2,381	-	19,260	86,369	67,109	22.30%
FUND TOTAL	$ 2,381	$ -	$ 19,260	$ 86,369	$ 67,109	22.30%
HISTORICAL COMMISSION (T2000)						
Historical Commission	-	-	-	4,933	4,933	0.00%
FUND TOTAL	$ -	$ -	$ -	$ 4,933	$ 4,933	0.00%
HISTORICAL COMMISSION ARCHIVES (T2100)						
Historical Commission	106	-	1,737	17,672	15,935	9.83%
FUND TOTAL	$ 106	$ -	$ 1,737	$ 17,672	$ 15,935	9.83%
CEMETERY FUND (T2300)						
Historical Commission	-	-	-	47,562	47,562	0.00%
FUND TOTAL	$ -	$ -	$ -	$ 47,562	$ 47,562	0.00%
UNCLAIMED ELECTRIC COOP CREDITS (T2600)						
Non-Departmental	-	-	-	2,459,304	2,459,304	0.00%
Community Outreach	6,500	-	16,500	16,500	-	100.00%
FUND TOTAL	$ 6,500	$ -	$ 16,500	$ 2,475,804	$ 2,459,304	0.67%

SPECIAL PURPOSE
BUDGET REPORT EXPENDITURE (BUDGET BASIS)
For the twelve (12) months ended 9/30/2025

	Current Month Expenditures	Encumbrances & Commitments	Total Expenditures Encumbrances & Commitments	Total Budget	Unexpended Budget	% Budget Used
FIRE MARSHAL CODE (T2900)						
Fire Marshal	19,675	31,400	279,718	973,692	693,974	28.73%
FUND TOTAL	$ 19,675	$ 31,400	$ 279,718	$ 973,692	$ 693,974	28.73%
DISTRICT ATTORNEY JPS CONTRACT (T3000)						
Crim District Attorney	106,880	-	723,258	745,115	21,857	97.07%
FUND TOTAL	$ 106,880	$ -	$ 723,258	$ 745,115	$ 21,857	97.07%
EMERGENCY SERVICES DISTRICT (T3100)						
Fire Marshal	7,619	-	88,406	91,577	3,171	96.54%
FUND TOTAL	$ 7,619	$ -	$ 88,406	$ 91,577	$ 3,171	96.54%
CSCD BOND SUPERVISION UNIT (T3300)						
Community Supervision	579,983	1,298	5,543,877	6,097,560	553,683	90.92%
FUND TOTAL	$ 579,983	$ 1,298	$ 5,543,877	$ 6,097,560	$ 553,683	90.92%
CRIMINAL COURTS DRUG PROGRAM (T3400)						
Criminal Court Administration	3,186	-	18,476	104,799	86,323	17.63%
FUND TOTAL	$ 3,186	$ -	$ 18,476	$ 104,799	$ 86,323	17.63%
MEDICAL EXAMINER CONFERENCE (T3700)						
Medical Examiner	514	-	980	26,131	25,151	3.75%
FUND TOTAL	$ 514	$ -	$ 980	$ 26,131	$ 25,151	3.75%

SPECIAL PURPOSE
BUDGET REPORT EXPENDITURE (BUDGET BASIS)
For the twelve (12) months ended 9/30/2025

	Current Month Expenditures	Encumbrances & Commitments	Total Expenditures Encumbrances & Commitments	Total Budget	Unexpended Budget	% Budget Used
PMC INSURED - 340B (T4100)						
Non-departmental	-	-	-	2,371,954	2,371,954	0.00%
HIV Admin	30	-	30	14,541	14,511	0.21%
Public Health	628,138	166,579	9,156,777	9,473,273	316,496	96.66%
FUND TOTAL	$ 628,168	$ 166,579	$ 9,156,807	$ 11,859,768	$ 2,702,961	77.21%
MISCELLANEOUS DONATIONS - JUVENILE PROBATION (T5200)						
Juvenile Services	-	-	-	18,847	18,847	0.00%
FUND TOTAL	$ -	$ -	$ -	$ 18,847	$ 18,847	0.00%
DONATIONS EMERGENCY MANAGEMENT (T5350)						
Emergency Management	-	-	-	8,425	8,425	0.00%
FUND TOTAL	$ -	$ -	$ -	$ 8,425	$ 8,425	0.00%
MISCELLANEOUS DONATIONS - HUMAN SERVICES (T5600)						
Human Services	2,242	-	60,760	78,402	17,642	77.50%
FUND TOTAL	$ 2,242	$ -	$ 60,760	$ 78,402	$ 17,642	77.50%
MISCELLANEOUS DONATIONS - HUMAN SERVICES - RELIANT (T5640)						
Human Services	44	-	20,326	20,326	-	100.00%
FUND TOTAL	$ 44	$ -	$ 20,326	$ 20,326	$ -	100.00%

SPECIAL PURPOSE
BUDGET REPORT EXPENDITURE (BUDGET BASIS)
For the twelve (12) months ended 9/30/2025

	Current Month Expenditures	Encumbrances & Commitments	Total Expenditures Encumbrances & Commitments	Total Budget	Unexpended Budget	% Budget Used
MISCELLANEOUS DONATIONS - CPS (T5700)						
Child Protective Services	7,005	-	11,647	101,616	89,969	11.46%
FUND TOTAL	$ 7,005	$ -	$ 11,647	$ 101,616	$ 89,969	11.46%
MISCELLANEOUS DONATIONS - HEALTH DEPT (T5800)						
Public Health	-	-	10,142	38,744	28,602	26.18%
FUND TOTAL	$ -	$ -	$ 10,142	$ 38,744	$ 28,602	26.18%
MISCELLANEOUS DONATIONS - VETERAN COURT PROGRAM (T5960)						
Veterans Diversion Court	-	-	-	23,128	23,128	0.00%
FUND TOTAL	$ -	$ -	$ -	$ 23,128	$ 23,128	0.00%
MISCELLANEOUS DONATIONS -FAMILY COURT SERVICES (T6000)						
Domestic Relations	1,089	-	1,089	1,727	638	63.06%
FUND TOTAL	$ 1,089	$ -	$ 1,089	$ 1,727	$ 638	63.06%
MISCELLANEOUS DONATIONS -CRCG (T6100)						
Public Assistance	-	-	18,139	50,270	32,131	36.08%
FUND TOTAL	$ -	$ -	$ 18,139	$ 50,270	$ 32,131	36.08%

SPECIAL PURPOSE
BUDGET REPORT EXPENDITURE (BUDGET BASIS)
For the twelve (12) months ended 9/30/2025

	Current Month Expenditures	Encumbrances & Commitments	Total Expenditures Encumbrances & Commitments	Total Budget	Unexpended Budget	% Budget Used
MISCELLANEOUS DONATIONS -PEACE OFFICER MEMORIAL (T6200)						
Buildings	-	-	-	94,493	94,493	0.00%
FUND TOTAL	$ -	$ -	$ -	$ 94,493	$ 94,493	0.00%
MISCELLANEOUS DONATIONS -LAW ENFORCEMENT (T6300)						
Sheriff	-	-	-	62	62	0.00%
FUND TOTAL	$ -	$ -	$ -	$ 62	$ 62	0.00%
ATTF RENTAL ASSOC DONATION (T6500)						
Sheriff	-	-	-	322	322	0.00%
FUND TOTAL	$ -	$ -	$ -	$ 322	$ 322	0.00%
SHERIFF'S EMPLOYEE RECOGNITION AND AWARD (T7000)						
Sheriff	-	-	-	1,678	1,678	0.00%
FUND TOTAL	$ -	$ -	$ -	$ 1,678	$ 1,678	0.00%
CONTRACT ELECTIONS (T7100)						
Elections Administration	(2,093,734)	112,228	2,251,170	5,370,000	3,118,830	41.92%
FUND TOTAL	$ (2,093,734)	$ 112,228	$ 2,251,170	$ 5,370,000	$ 3,118,830	41.92%

SPECIAL PURPOSE
BUDGET REPORT EXPENDITURE (BUDGET BASIS)
For the twelve (12) months ended 9/30/2025

	Current Month Expenditures	Encumbrances & Commitments	Total Expenditures Encumbrances & Commitments	Total Budget	Unexpended Budget	% Budget Used
ELECTIONS CHAPTER 19 (T7300)						
Elections Administration	47,201	-	154,993	545,079	390,086	28.43%
FUND TOTAL	$ 47,201	$ -	$ 154,993	$ 545,079	$ 390,086	28.43%
OPIOID EPIDEMIC SETTLEMENT (T8500)						
Non-Departmental	106,716	-	292,275	3,609,809	3,317,534	8.10%
Public Assistance	-	-	670,840	670,840	-	100.00%
FUND TOTAL	$ 106,716	$ -	$ 963,115	$ 4,280,649	$ 3,317,534	22.50%
PUBLIC IMPROVEMENT DISTRICT (T8600)						
Public Improvement District	9,754	-	10,495	31,937	21,442	32.86%
FUND TOTAL	$ 9,754	$ -	$ 10,495	$ 31,937	$ 21,442	32.86%
SPECIAL PURPOSE FUNDS TOTAL	$ 39,757,894	$ 74,826,472	$ 325,640,495	$ 795,158,603	$ 469,518,108	40.95%


TARRANT COUNTY, TEXAS

TARRANT COUNTY
COMMISSIONERS COURT COMMUNICATION

Department: Auditor **Prepared By:** Rebecca Powell **Approved By:** Kimberly Buchanan

SUBJECT:

Receive and File the Auditor's Report of the Fiscal Year 2025 Chapter 59 Asset Forfeiture Report Prepared by the Constable, Precinct 7

***** CONSENT AGENDA *****

COMMISSIONERS COURT ACTION REQUESTED

It is requested that the Commissioners Court Receive and File the Auditor's Report of the Fiscal Year 2025 Chapter 59 Asset Forfeiture Report Prepared by the Constable, Precinct 7.

BACKGROUND

As required by Chapter 59 of the Code of Criminal Procedure, the Auditor's Office reviewed the Fiscal Year 2025 Chapter 59 Asset Forfeiture Report by Law Enforcement Agency prepared by the Constable, Precinct 7. The report was electronically signed and submitted to the Office of the Attorney General on time.

FISCAL IMPACT

There is no fiscal impact associated with this item.

Attachments

Auditor's Report - FY2025 Ch59 Asset Forfeiture Report, Con7.pdf

Kimberly M. Buchanan, CPA
Tarrant County Auditor

Linda R. Castillo
First Assistant County Auditor

Office of the Tarrant County Auditor
100 E. Weatherford, Room 506
Fort Worth, Texas 76196-0103

Phone (817) 884-1205
Fax (817) 884-1104

October 28, 2025

The Honorable Sandra Lee, Constable, Precinct 7
The Honorable District Judges of Tarrant County
The Honorable Tarrant County Commissioners Court
Tarrant County, Texas

Re: Auditor's Report - FY2025 Chapter 59 Asset Forfeiture Report by Law Enforcement Agency

As required by Chapter 59 of the Code of Criminal Procedure, the Auditor's Office reviewed the FY2025 *Chapter 59 Asset Forfeiture Report by Law Enforcement Agency* prepared by the Tarrant County Constable, Precinct 7 (Constable). Based on the review, the auditor believes the amounts presented in the report are reasonable and contain the information required under Chapter 59.06 of the Code of Criminal Procedure. During FY2025, revenues received by the Constable's Office from forfeiture funds and interest totaled $4,696.37. Expenditures using forfeiture funds totaled $6,868.67. The report was electronically signed and submitted to the Office of the Attorney General on time.

The Constable reports financial and non-financial case activities to the District Attorney's Office (DA). The DA's Office records both financial and non-financial case activities into the Time Matters and Matrix databases. In October 2024, Matrix was implemented as the new electronic case system. The *Chapter 59 Asset Forfeiture Report by Law Enforcement Agency* report focuses on two separate elements of the asset forfeiture process: financial activity and case activity.

1. Financial Activity: Sections I and II include monies under the control and custody of the Constable's Office. We reviewed cash transactions recorded in the database to supporting documents such as court orders, seizure reports, and receipts. We also traced cash transactions under the control of the Constable's Office to the County's general ledger without exception. Section VI includes expenditures made by the Constable for activities related to the preservation, enforcement, and the administration of state law. We reconciled the amounts shown on the report to the County's general ledger without exception.

2. Case Activity: Sections III, IV, and V of the report include non-cash assets, such as motor vehicles, firearms, and other property (i.e., TV's, PC's, etc.). We traced the non-cash assets recorded in the Time Matters and Matrix databases to supporting documentation such as court orders and auction sales reports. We also performed a physical inspection of the assets under the control of the Constable's Office. We observed no exceptions.

We appreciate the cooperation of the Constable's staff during the review.

Sincerely,

[redacted]

Kimberly M. Buchanan, CPA
Tarrant County Auditor

Attachment: FY2025 Chapter 59 Asset Forfeiture Report by Law Enforcement Agency

Distribution: Warren Mitchell, Chief Deputy

Office of Constable Sandra D. Lee
Tarrant County Precinct7
1100 East Broad Street Suite 201
Mansfield, Texas 76063
817-437-5110

October 28, 2025

Kimberly M. Buchanan, CPA County Auditor

Re: Management Response to Auditor's FY 2025
Chapter 59 Asset Forfeiture Report

Ms. Buchanan,
Tarrant County Constable Office Precinct 7 is in receipt of the Auditor's report and agrees with your findings regarding the FY 2025 Chapter 59 Asset Forfeiture Report.

Auditors visit for FY 2025 Chapter 59 Asset Forfeiture Report

- Three purchases were made for law enforcement purposes.

ULINE INC – Hazardous Protective Gear totaling $960.
ARROWHEAD FORENSICS- Property Evidence Storage equipment totaling $812.11
TYR TACTICAL – Tactical Shield totaling $5096.56

- FY 2025 Chapter 59 Asset Forfeiture Report was filed on time to the OAG.

We would like to thank your office for your cooperation and assistance with this year's Audit.

Respectfully,

[redacted]

Constable Sandra D. Lee
Tarrant County Precinct 7
sdlee@tarrantcountytx.gov

KEN PAXTON
ATTORNEY GENERAL *of* TEXAS

CHAPTER 59 ASSET FORFEITURE REPORT BY LAW ENFORCEMENT AGENCY

Agency Information

Agency Information

Year:	2025	Agency Name:	Tarrant County Constable Precinct 7
Agency Mailing Street: 1100 E. Broad St. #201		City:	Mansfield
ZIP:	76063	State:	TX
County:	Tarrant	Phone Number:	(817) 473-5110
Agency Fiscal Beginning Month:	October	Agency Fiscal Ending Month:	September

I. Seized Funds

Do not include federal seizures and/or forfeitures on this form. This form is only for those seizures and/or forfeitures made pursuant to Chapter 59 of the Texas Code of Criminal Procedure.

Seized Funds Pursuant to Chapter 59

Funds that have been seized but have not yet been awarded/forfeited to your agency by the judicial system.

A) Beginning Balance: $0.00

B) Seizures During Reporting Period

Include only those seizures which occurred during the reporting period and where the seizure affidavit required by Article 59.03 is sworn to by a peace officer employed by your agency (E.G. seizing officer's affidavit).

1) Amount seized and retained in your agency's custody: $0.00

2) Amount seized and transferred to the District Attorney pending forfeiture:	$0.00
3) Total Seizures - This field will be auto-calculated when you SAVE or switch sections:	$0.00
C) Interest Earned on Seized Funds During Reporting Period:	$706.37
D) Amount Returned to Defendants/Respondents:	$0.00
E) Amount Transferred to Forfeiture Account:	$3,990.00
F) Other Reconciliation Items (Must provide detail in box below):	$0.00

Description:

G) Ending Balance - This field will be auto-calculated when you SAVE or switch sections:	($3,283.63)
Ending Balance - Mailed Form:	

II. Forfeited Funds & Other Court Awards

Forfeited Funds and Other Court Awards Pursuant to Chapter 59

Funds awarded to your agency by the judicial system and which are available to spend.

A) Beginning Balance:	$13,050.53
B) Amount Forfeited to and Received by Reporting Agency (Including Interest) During Reporting Period:	$0.00

C) Interest Earned on Forfeited Funds During Reporting Period:	$706.37
D) Amount Awarded Pursuant to 59.022:	$0.00
E) Amount Awarded Pursuant to 59.023:	$0.00
F) Proceeds Received by Your Agency From Sale of Forfeited Property:	$3,990.00
G) Amount Returned to Crime Victims:	$0.00
H) Other Reconciliation Items (Must provide detail in box below):	$0.00

Description:

I) Total Expenditures of Forfeited Funds During Reporting Period. This field will be auto-calculated once section VI has been completed and you save or switch sections.:	$6,868.67
J) Ending Balance - This field will be auto-calculated when you SAVE or switch sections.:	$10,878.23
I) Total Expenditure from Mailed Form:	
J) Ending Balance from Mailed Form:	

III. Other Property

Other Property

List the number of items seized for each category. Include only those seizures where a seizure is made by a peace officer employed by your agency. If property is sold, list under "Proceeds Received by Your Agency From Sale of Forfeited Property" in Section II (F) in the reporting year in which the proceeds are received. Please note - this should be a number not a currency amount. Example 4 cars seized, 3 cars forfeited and 0 cars put into use.

A) Motor Vehicles (Include cars, motorcycles, tractor trailers,etc.)

1) Seized:	0
2) Forfeited to Agency:	0
3) Returned to Defendants/Respondents:	0
4) Put into use by Agency:	0

B) Real Property (Count each parcel seized as one item)

1) Seized:	0
2) Forfeited to Agency:	0
3) Returned to Defendants/Respondents:	0
4) Put into use by Agency:	0

C) Computers (Include computer and attached system components, such as printers and monitors, as one item)

Please note - this should be a number not a currency amount. For example, 4 computers seized, 3 computers forfeited and 0 computers put into use.

1) Seized:	0
2) Forfeited to Agency:	0
3) Returned to Defendants/Respondents:	0
4) Put into use by Agency:	0

D) Firearms (Include only firearms seized for forfeiture under Chapter 59. Do not include weapons disposed under Chapter 18)

Please note - this should be a number not a currency amount. For example, 4 firearms seized, 3 firearms forfeited, 0 firearms put into use.

1) Seized:	0
2) Forfeited to Agency:	0
3) Returned to Defendants/Respondents:	0
4) Put into use by Agency:	0

E) Other Property

Please note - this should be a number not a currency amount.For example, 4 lots of tools seized, 3 lots of tools forfeited, 0 lots of tools put into use.

Description	Seized	Forfeited To Agency	Returned to Defendants/Respondents	Put into use by Agency

IV. Forfeited Property Received

Forfeited Property Received From Another Agency

Enter the total number of items transferred to your agency where the forfeiture judgment awarded ownership of the property to another agency prior to the transfer.

A) Motor Vehicles: 0

B) Real Property: 0

C) Computers: 0

D) Firearms: 0

E) Other: 0

V. Forfeited Property Transferred/Loaned

Forfeited Property Transferred or Loaned to Another Agency

Enter the total number of items transferred or loaned from your agency where the forfeiture judgment awarded ownership of the property to your agency prior to the transfer.

A) Motor Vehicles: 0

B) Real Property: 0

C) Computers: 0

D) Firearms: 0

E) Other: 0

VI. Expenditures: A - D

A) Salaries

1) Increase of Salary, Expense or Allowance for Employees (Salary Supplements):	$0.00
2) Salary Budgeted Solely From Forfeited Funds:	$0.00
3) Number of Employees Paid Using Forfeiture Funds:	0
4) TOTAL SALARIES PAID OUT OF CHAPTER 59 FUNDS:	$0.00
Total Salaries from Mailed Form:	

B) Overtime

1) For Employees Budgeted by Governing Body:	$0.00
2) For Employees Budgeted Solely out of Forfeiture Funds:	$0.00
3) Number of Employees Paid Using Forfeiture Funds:	0
4) TOTAL OVERTIME PAID OUT OF CHAPTER 59 FUNDS:	$0.00
Total Overtime from Mailed Form:	

C) Equipment

1) Vehicles:	$0.00
2) Computers:	$0.00
3) Firearms, Protective Body Armor, Personal Equipment:	$5,096.56
4) Furniture:	$0.00
5) Software:	$0.00
6) Maintenance Costs:	$0.00

7) Uniforms:	$960.00
8) K9 Related Costs:	$0.00
9) Other (Must provide detail in box below):	$0.00

Description:

10) TOTAL EQUIPMENT PURCHASED WITH CHAPTER 59 FUNDS:	$6,056.56
Total Equipment from Mailed Form:	

D) Supplies

1) Office Supplies:	$812.11
2) Mobile Phone and Data Account Fees:	$0.00
3) Internet:	$0.00
4) Other (Must provide detail in box below):	$0.00

Description:

5) TOTAL SUPPLIES PURCHASED WITH CHAPTER 59 FUNDS:	$812.11
Total Supplies from Mailed Form:	

VI. Expenditures: E

E) Travel

1) In State Travel

a) Transportation:	$0.00
b) Meals & Lodging:	$0.00
c) Mileage:	$0.00

d) Incidental Expenses: $0.00

e) Total In State Travel: $0.00

Total In State Travel from Mailed Form:

2) Out of State Travel

a) Transportation: $0.00

b) Meals & Lodging: $0.00

c) Mileage: $0.00

d) Incidental Expenses: $0.00

e) Total Out of State Travel: $0.00

Total Out of State Travel from Mailed Form:

3) Total Travel Paid Out of Chapter 59 Funds

Total Travel Paid Out of Chapter 59 Funds: $0.00

Total Travel from Mailed Form:

VI. Expenditures: F - G

F) Training

1) Fees (Conferences, Seminars): $0.00

2) Materials (Books, CDs, Videos, etc.): $0.00

3) Other (Must provide detail in box below): $0.00

Description:

4) TOTAL TRAINING PAID OUT OF CHAPTER 59 FUNDS: $0.00

Total Training from Mailed Form:	

G) Investigative Costs

1) Informant Costs:	$0.00
2) Buy Money:	$0.00
3) Lab Expenses:	$0.00
4) Other (Must provide detail in box below):	$0.00

Description:

5) TOTAL INVESTIGATIVE COSTS PAID OUT OF CHAPTER 59 FUNDS:	$0.00
Total Investigative Costs from Mailed Form:	

VI. Expenditures: H - N

H) Prevention / Treatment Programs / Financial Assistance / Donation

1) Total Prevention/Treatment Programs (pursuant to 59.06 (d-3(6), (h), (j)):	$0.00
2) Total Financial Assistance (pursuant to Articles 59.06 (n) and (o)):	$0.00
3) Total Donations (pursuant to Articles 59.06 (d-2)):	$0.00
4) Total scholarships to children of officers killed in the line of duty (pursuant to Article 59.06 (r)):	$0.00
5) TOTAL PREVENTION/TREATMENT PROGRAMS/FINANCIAL ASSISTANCE/DONATIONS (Pursuant to Articles 59.06 (d-3(6)), (h), (j), (n), (o), (d-2),	$0.00

(r)) - This field will be auto-calculated when you SAVE or switch sections:	
Total PREVENTION/TREATMENT PROGRAMS/FINANCIAL ASSISTANCE/DONATIONS from Mailed Form:	

I) Facility Costs

1) Building Purchase:	$0.00
2) Lease Payments:	$0.00
3) Remodeling:	$0.00
4) Maintenance Costs:	$0.00
5) Utilities:	$0.00
6) Other (Must provide detail in box below):	$0.00

Description:

7) TOTAL FACILITY COSTS PAID OUT OF CHAPTER 59 FUNDS:	$0.00
Total Facility Costs from Mailed Form:	

J) Miscellaneous Fees

1) Court Costs:	$0.00
2) Filing Fees:	$0.00
3) Insurance:	$0.00
4) Witness Fees (including travel and security):	$0.00
5) Audit Costs and Fees (including audit preparation and professional fees):	$0.00
6) Other (Must provide detail in box below):	$0.00

Description:

7) Total Miscellaneous Fees Paid Out of Chapter 59 Funds	$0.00

- This will be auto-calculated when you SAVE or switch sections:	
Total Miscellaneous Costs from Mailed Form:	

K) Paid to State Treasury / General Fund / Health & Human Services Commission

1) Total paid to State Treasury due to lack of local agreement pursuant to 59.06 (c):	$0.00
2) Total paid to State Treasury due to participating in task force not established in accordance with 59.06 (q)(1):	$0.00
3) Total paid to General Fund pursuant to 59.06 (c-3) (C) (Texas Department of Public Safety only):	$0.00
4)Total forfeiture funds transferred to the Health and Human Services Commission pursuant to 59.06 (p):	$0.00
5) TOTAL PAID TO STATE TREASURY/ GENERAL FUND/ HEALTH & HUMAN SERVICES COMMISSION OUT OF CHAPTER 59 FUNDS:	$0.00
Total Paid to State Treasury/General fund/ Health & Human Services Commission from Mailed Form:	

L) Total Paid to Cooperating Agency(ies) Pursuant to Local Agreement

TOTAL PAID TO COOPERATING AGENCY(IES) PURSUANT TO LOCAL AGREEMENT:	$0.00

M) Total Other Expenses Paid Out of Chapter 59 Funds Which Are Not Accounted For In Previous Categories

TOTAL OTHER EXPENSES PAID OUT OF CHAPTER 59 FUNDS WHICH ARE NOT ACCOUNTED FOR IN PREVIOUS CATEGORIES (Must provide detail in box below):	$0.00

Description:

N) Total Expenditures

TOTAL EXPENDITURES: $6,868.67

Total Expenditures from Mailed Form:

Financial Professional Signature

After signing and pressing "Save", using your email address and password account access, and pursuant to the terms of service, you certify that you swear or affirm that the Commissioners Court, City Council or Head of Agency (if no governing body) has requested that you conduct the audit required by Article 59.06 of the Code of Criminal Procedure and that upon diligent inspection of all relevant documents and supporting materials, you believe that the information contained in this report is true and correct to the best of your Knowledge.

Do you acknowledge the above terms : Yes

Typed Name of Auditor/Treasurer/Accounting Professional/Preparer:: Kimberly M Buchanan

Title: Tarrant County Auditor

Head of Agency Certification

After signing and pressing "Submit" using your email address and password account access, and pursuant to the terms of service you swear or affirm, under penalty of perjury, that you have accounted for the seizure, forfeiture, receipt, and specific expenditure of all proceeds and property subject to Chapter 59 of the Code of Criminal Procedure, and that upon diligent inspection of all relevant documents and supporting materials, this asset forfeiture report is true and correct and contains all information required by Article 59.06 of the Code of Criminal Procedure. You further swear or affirm that, to the best of your knowledge, all expenditures reported herein were lawful and proper, and made in accordance with Texas law.

Do you acknowledge the above terms : Yes

Year: 2025

Typed Name of Head of Agency:: Sandra Lee

Title: Constable

Date: 10/28/2025

Comments:

TARRANT COUNTY
COMMISSIONERS COURT COMMUNICATION

Department: Auditor **Prepared By:** Rebecca Powell **Approved By:** Kimberly Buchanan

SUBJECT:

Receive and File the Auditor's Report of the Fiscal Year 2025 Chapter 59 Asset Forfeiture Report Prepared by the District Attorney's Office

***** CONSENT AGENDA *****

COMMISSIONERS COURT ACTION REQUESTED

It is requested that the Commissioners Court receive and file the Auditor's Report of the Fiscal Year 2025 Chapter 59 Asset Forfeiture Report prepared by the District Attorney's Office.

BACKGROUND

As required by Chapter 59 of the Code of Criminal Procedure, the Auditor's Office reviewed the Fiscal Year 2025 Chapter 59 Asset Forfeiture Report by Attorney Representing the State prepared by the District Attorney's Office. The report was electronically signed and submitted to the Office of the Attorney General on time.

Since no exceptions were noted, management elected not to provide a written response.

FISCAL IMPACT

There is no fiscal impact associated with this item.

Attachments

Auditor's Report - FY2025 Ch59 Asset Forfeiture Report DA.pdf

Kimberly M. Buchanan, CPA
Tarrant County Auditor

Linda R. Castillo
First Assistant County Auditor

Office of the Tarrant County Auditor
100 E. Weatherford, Room 506
Fort Worth, Texas 76196-0103

Phone (817) 884-1205
Fax (817) 884-1104

November 6, 2025

The Honorable Phil Sorrells, District Attorney
The Honorable District Judges of Tarrant County
The Honorable Tarrant County Commissioners Court
Tarrant County, Texas

Re: Auditor's Report - FY2025 Chapter 59 Asset Forfeiture Report by Attorney Representing the State

As required by Chapter 59 of the Code of Criminal Procedure, the Auditor's Office reviewed the FY2025 *Chapter 59 Asset Forfeiture Report by Attorney Representing the State* prepared by the District Attorney's (DA) Office. During FY2025, revenues received by the DA's Office from forfeiture funds, interest earned, and auction proceeds totaled $525,329.07. Expenditures using forfeiture funds totaled $442.271.13. Based on the review, the auditor believes the amounts presented in the report are reasonable and contain the information required under Chapter 59 of the Code of Criminal Procedure. The report was electronically signed and submitted to the Office of the Attorney General on time.

The DA's Office records both financial and non-financial case activities into the Time Matters and Matrix databases. In October 2024, Matrix was implemented as the new electronic case system. The DA's Office does not necessarily have custody and control of all cash and non-cash assets since other agencies may retain control of certain seized assets. Therefore, we cannot express an opinion whether *all* transactions were recorded into the databases.

The annual *Chapter 59 Asset Forfeiture Report by Attorney Representing the State* report focuses on two separate elements of the asset forfeiture process: financial activity and case activity.

1. Financial Activity: Sections I and II include monies under the control and custody of the DA's Office. We reviewed selected cash transactions recorded in the database to supporting documents such as court orders, seizure reports, and receipts. We also traced cash transactions under the control of the DA's Office to the County's general ledger and found no exceptions.

   Section VI includes expenditures made by the DA's Office for activities related to the preservation, enforcement, and the administration of state law. We reconciled the amounts shown on the report to the County's general ledger without exception.

2. Case Activity: Sections III, IV, and V of the report include non-cash assets, such as motor vehicles, firearms, and other property (i.e. TV's, PC's, etc.). On a test basis, we 1) traced the non-cash assets recorded in the Time Matters and Matrix databases to supporting documentation such as court orders and auction sales reports, and 2) performed a physical inspection of the assets under the control of the DA's Office. We observed no exceptions.

We appreciate the efforts of the DA's staff to facilitate the timely completion of this review. If you have any questions, please don't hesitate to call.

Sincerely,

[redacted]

Kimberly M. Buchanan, CPA
Tarrant County Auditor

Attachment: FY2025 Chapter 59 Asset Forfeiture Report by Attorney Representing the State

Distribution: Ann Durfee, Chief of Staff, Operations, District Attorney's Office

KEN PAXTON
ATTORNEY GENERAL of TEXAS

CHAPTER 59 ASSET FORFEITURE REPORT BY ATTORNEY REPRESENTING THE STATE

Agency Information

Agency Information

Agency Name:	Tarrant County Criminal District Attorney	Agency Mailing Street:	401 W. Belknap St.
City:	Fort Worth	ZIP:	76196
State:	TX	County:	Tarrant
Phone Number:	(817) 884-1694	Agency Fiscal Beginning Month:	September
Agency Fiscal Ending Month:	August		

I. Seized Funds

Do not include federal seizures and/or forfeitures on this form. This form is only for those seizures and/or forfeitures made pursuant to Chapter 59 of the Texas Code of Criminal Procedure.

Seized Funds Pursuant to Chapter 59

Funds that have been seized but have not yet been awarded/forfeited to your agency by the judicial system.

A) Beginning Seized Funds Balance:	$1,440,669.39

B) Seizures During Reporting Period:

1) Amount seized by employees of your agency:	$0.00

2) Amount seized by other agencies:	$1,406,208.64
C) Total Amount of Forfeiture Petitions Filed for All Agencies You Represent:	$2,022,964.15
D)Total Amount of Forfeitures Pending for All Agencies You Represent:	$2,252,718.14
E) Interest Earned on Seized Funds During Reporting Period:	$64,627.60
F) Amount Returned to Defendants/Respondents:	$185,202.09
G) Amount Transferred to Forfeiture Account:	$1,037,412.53
H) Other Reconciliation Items (Must provide detail in box below):	$0.00

Description:

I) Seized Funds Ending Balance - This field will be auto-calculated when you SAVE or switch sections:	$1,688,891.01

Ending Balance-Mailed Form:

II. Forfeited Funds

Forfeited Funds and Other Court Awards Pursuant to Chapter 59

Funds awarded to your agency by the judicial system and which are available to spend.

A) Beginning Forfeited Funds Balance:	$2,380,875.72

B) Amount Forfeited For All Agencies You Represent and Covered by Local Agreement

Enter the total amount forfeited by all forfeiture judgments in your jurisdiction for the reporting year.
Do not include judgments that are not yet final due to appeal or motions for new trial.
Include interest that was forfeited as part of the judgment.

1) Amount Forfeited and Transferred to all Agencies Covered by Local Agreement:	$631,788.94
2) Amount Forfeited and Received by Your Agency:	$411,723.30
3) Total Amount Forfeited and Transferred to all Agencies Covered by Local Agreement - This field will be auto-calculated when you hit save or switch sections:	$1,043,512.24
C) Interest Earned on Forfeited Funds During Reporting Period:	$113,371.80

D) Amount Awarded For All Agencies You Represent Pursuant to 59.022

Enter the total amount awarded by the court for costs, forfeitures and money judgments pursuant to Article 59.022

1) Amount Awarded and Transferred to All Agencies Pursuant to 59.022:	$0.00
2) Amount Awarded and Received by your agency pursuant to 59.022:	$0.00
3) Total Amount Awarded For All Agencies You Represent Pursuant to 59.022 - This field will be auto-calculated when you hit Save or switch sections:	$0.00

E) Amount Awarded For All Agencies You Represent Pursuant to 59.023

Enter the total amount awarded by the court on lawsuits for proceeds filed pursuant to Article 59.023

1) Amount Awarded and Transferred to All Agencies Pursuant to 59.023:	$0.00
2) Amount Awarded and Received By Your Agency Pursuant to 59.023:	$0.00

3) Total Amount Awarded For

All Agencies You Represent Pursuant to 59.023 - This field will be auto-calculated when you hit Save or switch sections:	$0.00
F) Proceeds Received by Your Agency From Sale of Forfeited Property:	$233.97
G) Amount Returned to Crime Victims:	$0.00
H) Other Reconciliation Items (Must provide detail in box below):	$0.00

Description:

I) Total Expenditures of Forfeited Funds During Reporting Period - This field will be auto-calculated based on your answers in the Expenditures section:	$442,271.13
J) Forfeited Funds Ending Balance (balance will be automatically calculated after expenditures are entered):	$2,463,933.66
Total Expenditures from Mailed Form:	
Ending Balance from Mailed Form:	

III. Other Property

Other Property

List the number of cases filed, pending, or disposed for each category. List as "pending" only cases where a petition was filed. List as "seized" only those seizures where a seizure is made by a peace officer employed by your agency. If

property is sold, list under "Proceeds Received by Your Agency From Sale of Forfeited Property" in Section II (F) in the reporting year in which the proceeds are received. Please note - this should be a number not a currency amount. Example 4 cars seized, 3 cars forfeited and 0 cars put into use.

A) Motor Vehicles (Include cars, motorcycles, tractor trailers,etc.)

Please note - this should be a number, not a currency amount. For example, 4 pending, 3 seized, 12 new petitions, etc

1) Pending for all agencies at beginning of reporting period:	109
2) Seized by your agency during reporting period:	0
3) New petitions filed for all agencies during reporting period:	100
4) Forfeited to your agency during reporting period:	114
5) Put into service by your agency during reporting period:	0
6) Pending for all agencies at end of reporting period:	95

B) Real Property (Count each parcel seized as one item)

Please note - this should be a number, not a currency amount. For example, 4 pending, 3 seized, 12 new petitions, etc

1) Pending for all agencies at beginning of reporting period:	0
2) Seized by your agency during reporting period:	0
3) New petitions filed for all agencies during reporting period:	0
4) Forfeited to your agency during reporting period:	0
5) Put into service by your agency during reporting period:	0
6) Pending for all agencies at end of reporting period:	0

C) Computers (Include computer and attached system components, such as printers and monitors, as one item)

Please note - this should be a number, not a currency amount. For example, 4 pending, 3 seized, 12 new petitions, etc

1) Pending for all agencies at beginning of reporting period:	4
2) Seized by your agency during reporting period:	0
3) New petitions filed for all agencies during reporting period:	2
4) Forfeited to your agency during reporting period:	6

5) Put into service by your agency during reporting period:	0
6) Pending for all agencies at end of reporting period:	0

D) Firearms (Include only firearms seized for forfeiture under Chapter 59. Do not include weapons disposed under Chapter 18)

Please note - this should be a number, not a currency amount. For example, 4 pending, 3 seized, 12 new petitions, etc

1) Pending for all agencies at beginning of reporting period:	63
2) Seized by your agency during reporting period:	0
3) New petitions filed for all agencies during reporting period:	88
4) Forfeited to your agency during reporting period:	66
5) Put into service by your agency during reporting period:	0
6) Pending for all agencies at end of reporting period:	85

E) Other Property

To add a reporting box for each additional item to be itemized, click the "New Other Property DA" button. Please note - this should be a number not a currency amount. For example, 4 pending, 3 seized, 12 new petitions, etc. For each line added, you need to hit the SAVE icon in the Action column.

Description	Pending For All Agencies (Beginning)	Seized By Your Agency	New Petitions Filed For All Agencies	Forfeited To Agency	Put Into Use by Agency	Pending For All Agencies (End)
Other/Miscellaneous	119	0	240	93	0	266
Devices	28	0	11	30	0	9

IV. Forfeited Property Received

Forfeited Property Received From Another Agency

Enter the total number of items transferred to your agency where the forfeiture judgment awarded ownership of the property to another agency prior to the transfer.

A) Motor Vehicles: 0

B) Real Property: 0

C) Computers: 0

D) Firearms: 0

E) Other: 0

V. Forfeited Property Transferred/Loaned

Forfeited Property Transferred or Loaned From Another Agency

Enter the total number of items transferred or loaned from your agency where the forfeiture judgment awarded ownership of the property to your agency prior to the transfer.

A) Motor Vehicles: 0

B) Real Property: 0

C) Computers: 0

D) Firearms: 0

E) Other: 0

VI. Expenditures: A - D

Expenditures

This category is for Chapter 59 expenditures SOLELY for the official purposes of the office of the attorney representing the state - not for expenditures made pursuant to your general budget. List the total amount expended for each of the categories. If proceeds are expended for a category not listed, state the amount and nature of the expenditure under the Other category.

A) Salaries

1) Increase of Salary, Expense or Allowance for Employees (Salary Supplements): $0.00

2) Salary Budgeted Solely From Forfeited Funds: $0.00

3) Number of Employees Paid Using Forfeiture Funds:	0
4) TOTAL SALARIES PAID OUT OF CHAPTER 59 FUNDS - This field will be auto-calculated once you hit save or switch sections:	$0.00
Total Salaries from Mailed Form:	

B) Overtime

1) For Employees Budgeted by Governing Body:	$0.00
2) For Employees Budgeted Solely out of Forfeiture Funds:	$0.00
3) Number of Employees Paid Using Forfeiture Funds:	0
4) TOTAL OVERTIME PAID OUT OF CHAPTER 59 FUNDS - This field will be auto-calculated once you hit save or switch sections:	$0.00
Total Overtime from Mailed Form:	

C) Equipment

1) Vehicles:	$0.00
2) Computers:	$522.99
3) Firearms, Protective Body Armor, Personal Equipment:	$28,039.70
4) Furniture:	$30,731.98
5) Software:	$52,229.84
6) Maintenance Costs:	$0.00
7) Uniforms:	$0.00
8) K9 Related Costs:	$0.00
9) Visual Aid Equipment for Litigation:	$6,611.02
10) Other (Must provide detail in box below):	$0.00

Description:

11) TOTAL EQUIPMENT PURCHASED WITH CHAPTER 59 FUNDS - This field will be auto-calculated once you hit save or switch sections:	$118,135.53
Total Equipment from Mailed Form:	

D) Supplies

1) Office Supplies:	$32,230.76
2) Mobile Phone and Data Account Fees:	$0.00
3) Internet:	$0.00
4) Other (Must provide detail in box below):	$0.00

Description:

5) TOTAL SUPPLIES PURCHASED WITH CHAPTER 59 FUNDS - This field will be auto-calculated once you hit save or switch sections:	$32,230.76
Total Supplies from Mailed Form:	

VI. Expenditures: F - G

F) Training

1) Fees (Conferences, Seminars):	$71,376.20
2) Materials (Books, CDs, Videos, etc.):	$0.00
3) Other (Must provide detail in box below):	$0.00

Description:

4) TOTAL TRAINING PAID OUT OF CHAPTER 59 FUNDS - This field will be auto-calculated once you hit save or switch sections:	$71,376.20
Total Training from Mailed Form:	

G) Investigative Costs

1) Informant Costs:	$0.00
2) Buy Money:	$0.00
3) Lab Expenses:	$6,800.00
4) Other (Must provide detail in box below):	$0.00

Description:

5) TOTAL INVESTIGATIVE COSTS PAID OUT OF CHAPTER 59 FUNDS - This field will be auto-calculated once you hit save or switch sections:	$6,800.00
Total Investigative Costs from Mailed Form:	

VI. Expenditures: E

E) Travel

1) In State Travel

a) Transportation:	$0.00
b) Meals & Lodging:	$485.82
c) Mileage:	$423.44
d) Incidental Expenses:	$0.00
e) Total In State Travel - This field will be auto-calculated once you hit save or switch sections:	$909.26

Total In State Travel from Mailed Form:	

2) Out of State Travel

a) Transportation:	$3,306.06
b) Meals & Lodging:	$0.00
c) Mileage:	$0.00
d) Incidental Expenses:	$0.00
e) Total Out of State Travel:	$3,306.06
Total In State Travel from Mailed Form:	

3) Total Travel Paid Out of Chapter 59 Funds

Total Travel Paid Out of Chapter 59 Funds - This field will be auto-calculated once you hit save or switch sections:	$4,215.32
Total Travel from Mailed Form:	

VI. Expenditures: H - N

H) Prevention / Treatment Programs / Financial Assistance / Donation

1) Total Prevention/Treatment Programs (pursuant to 59.06 (d-3(6), (h), (j)):	$0.00
2) Total Financial Assistance (pursuant to Articles 59.06 (n) and (o)):	$0.00
3) Total Donations (pursuant to Articles 59.06 (d-2)):	$28,616.06
4) TOTAL PREVENTION/TREATMENT PROGRAMS/FINANCIAL ASSISTANCE/DONATIONS (pursuant to Articles 59.06 (d-3(6)),(h),(j),(n),(o),(d-2)) -	$28,616.06

This field will be auto-calculated once you hit save or switch sections:	
Total PREVENTION/TREATMENT PROGRAMS/FINANCIAL ASSISTANCE/DONATIONS from Mailed Form:	

I) Facility Costs

1) Building Purchase:	$0.00
2) Lease Payments:	$5,036.93
3) Remodeling:	$0.00
4) Maintenance Costs:	$0.00
5) Utilities:	$0.00
6) Other (Must provide detail in box below):	$0.00

Description:

7) TOTAL FACILITY COSTS PAID OUT OF CHAPTER 59 FUNDS - This field will be auto-calculated once you hit save or switch sections:	$5,036.93
Total Investigative Costs from Mailed Form:	

J) Miscellaneous Fees

1) Court Costs:	$93,641.66
2) Filing Fees:	$0.00
3) Insurance:	$0.00
4) Witness Fees (including travel and security):	$0.00
5) Audit Costs and Fees (including audit preparation and professional fees):	$0.00
6) State Bar Dues and Legal Association Dues:	$82,218.67
7) Legal Library Supplies and Access Fees:	$0.00
8) Other (Must provide detail in box below):	$0.00

Description of Other Miscellaneous Fees:

9) TOTAL MISCELLANEOUS FEES PAID OUT OF CHAPTER 59 FUNDS - This field will be auto-calculated once you hit save or switch sections:	$175,860.33
Total Miscellaneous Costs from Mailed Form:	

K) Paid to State Treasury / General Fund / Health & Human Services Commission/ Office of the Attorney General

1) Total paid to State Treasury due to lack of local agreement pursuant to 59.06 (a):	$0.00
2) Total paid to State Treasury due to participating in task force not established in accordance with 59.06 (q)(1):	$0.00
3) Total paid to General Fund pursuant to 59.06 (c-3) (C) (Texas Department of Public Safety only):	$0.00
4)Total forfeiture funds transferred to the Health and Human Services Commission pursuant to 59.06 (p):	$0.00
5)Total paid to the Office of the Attorney General pursuant to 59.06(k):	$0.00
6) TOTAL PAID TO STATE TREASURY/ GENERAL FUND/ HEALTH & HUMAN SERVICES COMMISSION/ OFFICE OF THE ATTORNEY GENERAL OUT OF CHAPTER 59 FUNDS - This field will be auto-calculated once you hit save or switch sections:	$0.00
Total Paid to State Treasury/General fund/ Health & Human Services Commission from Mailed Form:	

L) Total Paid to Cooperating Agency(ies) Pursuant to Local Agreement

TOTAL PAID TO

COOPERATING AGENCY(IES) PURSUANT TO LOCAL AGREEMENT:	$0.00

M) Total Other Expenses Paid Out of Chapter 59 Funds Which Are Not Accounted For In Previous Categories

TOTAL OTHER EXPENSES PAID OUT OF CHAPTER 59 FUNDS WHICH ARE NOT ACCOUNTED FOR IN PREVIOUS CATEGORIES (Must provide detail in box below):	$0.00

Description:

N) Total Expenditures

TOTAL EXPENDITURES - This field will be auto-calculated once you hit save or switch sections:	$442,271.13
Total Expenditures from Mailed Form:	

Financial Professional Certification

After signing and pressing "Save", using your email address and password account access, and pursuant to the terms of service, you certify that you swear or affirm that the Commissioners Court, City Council or Head of Agency (if no governing body) has requested that you conduct the audit required by Article 59.06 of the Code of Criminal Procedure and that upon diligent inspection of all relevant documents and supporting materials, you believe that the information contained in this report is true and correct to the best of your Knowledge.

Financial Professional Acknowledge Terms:	Yes
Typed Name of Auditor/Treasurer/Accounting Professional/Preparer::	Kimberly M Buchanan
Title:	Tarrant County Auditor

Additional Signature Instructions

If you would like to have additional financial professional signatures, please click the "New Financial Professional Signature" button below.

Signature Title Date

Head of Agency Certification

After signing and pressing "Submit" using your email address and password account access, and pursuant to the terms of service you swear or affirm, under penalty of perjury, that you have accounted for the seizure, forfeiture, receipt, and specific expenditure of all proceeds and property subject to Chapter 59 of the Code of Criminal Procedure, and that upon diligent inspection of all relevant documents and supporting materials, this asset forfeiture report is true and correct and contains all information required by Article 59.06 of the Code of Criminal Procedure. You further swear or affirm that, to the best of your knowledge, all expenditures reported herein were lawful and proper, and made in accordance with Texas law.

Do you acknowledge the above terms: : Yes

Year: 2025

NAME: Phil Sorrells

TITLE: Criminal District Attorney

DATE: 10/27/2025

Comments:

TARRANT COUNTY
COMMISSIONERS COURT COMMUNICATION

Department: Auditor **Prepared By:** Rebecca Powell **Approved By:** Kimberly Buchanan

SUBJECT:

Receive and File the Auditor's Report for the Cash and Other Remittances Control Review of the Community Supervision and Corrections Department

***** CONSENT AGENDA *****

COMMISSIONERS COURT ACTION REQUESTED

It is requested that the Commissioners Court receive and file the Auditor's Report for the Cash and Other Remittances Control Review of the Community Supervision and Corrections Department (CSCD).

BACKGROUND

In accordance with Local Government Code, the Auditor's Office conducted a surprise cash count at all CSCD locations on November 5th and 6th, 2025. The objectives of the review were to determine whether cash and other remittances reconciled and whether safeguards were in place to protect County funds.

Since no exceptions were noted, management elected not to provide a written response.

FISCAL IMPACT

There is no fiscal impact.

Attachments

Auditor's Report - Cash and Other Remittances Control Review, CSCD.pdf

Kimberly M. Buchanan, CPA
Tarrant County Auditor

Linda R. Castillo
First Assistant County Auditor

Office of the Tarrant County Auditor
100 E. Weatherford, Room 506
Fort Worth, Texas 76196-0103

Phone (817) 884-1205
Fax (817) 884-1104

November 19, 2025

Ms. Cobi Tittle, Director, Community Supervision and Corrections Department
The Honorable District Judges
The Honorable Commissioners Court
Tarrant County, Texas

Re: Auditor's Report – Cash and Other Remittances Control Review, CSCD

In accordance with Local Government Code, the Auditor's Office conducted a surprise cash count at all Community Supervision and Corrections Department (CSCD) locations on November 5th and 6th, 2025. The Auditor serves as the fiscal officer of the CSCD through judicial appointment and contractual agreement. The objectives of the review were to determine whether cash and other remittances reconciled and whether safeguards were in place to protect State funds. At the time of our counts, cash and remittances reconciled, and controls were adequate.

We appreciate the cooperation of the CSCD staff during our review. If you have any questions concerning this report, please do not hesitate to call.

Sincerely,

[redacted]

Kimberly M. Buchanan, CPA
Tarrant County Auditor

Attachment: Management's response

Distribution: Matthew Weaver, Manager, Administrative Services

TARRANT COUNTY
COMMISSIONERS COURT COMMUNICATION

Court Date: December 9, 2025	**Court Order #:**	**Page:** 1 of 14
Department: Budget and Risk Management	**Prepared By:** Rand Otten	**Approved By:** Matthew Jones

SUBJECT:

Consideration of an Interlocal Agreement between Tarrant County and My Health My Resources of Tarrant County for the Operation of the Mental Health Jail Diversion Center

*****CONSENT AGENDA *****

COMMISSIONERS COURT ACTION REQUESTED

It is requested that the Commissioners Court consider an Interlocal Agreement between Tarrant County and My Health My Resources of Tarrant County (MHMR) for the operation of the Mental Health Jail Diversion Center (MHJDC).

BACKGROUND

The MHJDC provides services related to mental health treatment, substance misuse treatment, and other behavioral health services. The facility offers a short-stay alternative to incarceration for non-violent, justice-involved individuals with mental health needs.

On December 3, 2024, the Commissioners Court, through Court Order #144339, approved the most recent MHJDC ILA for MHMR to serve as the primary operator of the Tarrant County MHJDC for the period of January 1, 2025 through September 30, 2025. During this period, MHMR reported the following: cumulative referrals: 1,146; number of different law enforcement agencies utilizing the MHJDC: 24; number of referrals diverted by the Tarrant County Criminal District Attorney's Office: 459; average length of stay for all patients (in hours): 46 hours.

Approval of this ILA will allow the Commissioners Court to continue its partnership with MHMR to operate the MHJDC. The agreement covers FY 2026, beginning October 1, 2025 and ending September 30, 2026. Total funding for this ILA will not exceed $5,901,309.00.

FISCAL IMPACT

Funding in the amount of $5,901,309.00 is available in T0450-2026 Public Health-1115 Waiver/1140100000 Non-Departmental/566021 MHMR.

PASSED AND APPROVED on December 9, 2025.

COUNTY OF TARRANT
STATE OF TEXAS

By: Separate Electronic Signature Page
Tim O'Hare
County Judge

APPROVED AS TO FORM:

_____
District Attorney's Office*

*By law, the District Attorney's Office may only approve contracts for its clients. We reviewed this document as to form from our client's legal perspective. Other parties may not rely on this approval. Instead, those parties should seek contract review from independent counsel.

Attachments

FY26 MHMR JDC ILA 110625 edit.pdf

INTERLOCAL AGREEEMENT BETWEEN TARRANT COUNTY AND MY HEALTH MY RESOURCES OF TARRANT COUNTY FOR OPERATION OF THE TARRANT COUNTY MENTAL HEALTH JAIL DIVERSION CENTER

This Interlocal Agreement ("Agreement") is between Tarrant County (the "County"), a political subdivision of the State of Texas, and My Health My Resources of Tarrant County ("MHMR"), a unit of local government as outlined in Chapter 534 of the Texas Health and Safety Code (collectively, the "Parties"), and shall be effective on October 1, 2025 ("Effective Date"). The Parties have reviewed this Agreement and agree to the following:

WHERAS, the County recognizes the importance of a mental health jail diversion center to divert certain low-level offenders from incarceration; and

WHEREAS, the County recognizes the need for mental health services to related to mental health treatment, substance misuse treatment, and other behavioral health services; and

WHEREAS, studies show that individuals with mental health conditions are best served by offering them services in the appropriate setting at the appropriate time and place; and

WHEREAS, growing number of individuals in Tarrant County and across the nation receive mental health services in jail rather than in mental health settings; and

WHEREAS, appropriate care and services are needed for individuals with mental health conditions who have had minor interactions with law enforcement in Tarrant County; and

WHEREAS, Tarrant County seeks to provide a recovery oriented, short-stay alternative to incarceration for non-violent, justice-oriented persons with mental health needs; and

WHEREAS, this Agreement is made pursuant to the authority of Chapter 791 of the Texas Government Code; and

WHEREAS, the subject of this Agreement is necessary for the benefit of the public and each party has the legal authority to perform and to provide the governmental function or service which is the subject matter of this Agreement;

WHEREAS, any payments or performance required by this Agreement shall come from current revenues legally available to the Parties; and

NOW, THEREFORE, for and in consideration of the mutual undertaking hereinafter set forth and for adequate consideration given, the Parties agree to the following:

I.
OBLIGATIONS OF THE COUNTY

1. Facility. The County shall be responsible for providing and maintaining the real property to be used for the Tarrant County Mental Health Jail Diversion Center ("MHJDC") and associated support services programs.

2. Security. The County shall provide the security for the MHJDC. The required number of personnel and deployment of security personnel shall be determined by the County in consultation with MHMR.

II.
OBLIGATIONS OF MHMR

3. Exclusive Benefit of Services. MHMR agrees to operate the MHJDC. MHMR shall provide the services contemplated in this Agreement for clients who have entered the MHJDC.

4. Services. MHMR may offer one or more the of following services, as appropriate, to each individual participant of the MHJDC:

i. Appropriate medical and psychiatric assessments;
ii. Integrated treatment and individualized care plans to assist in participants' stabilization;
iii. On-site psychiatric care;
iv. On-site primary medical care;
v. Medication management;
vi. Psychosocial programming;
vii. Substance use disorder interventions;
viii. Rehabilitation services;
ix. Respite beds;
x. Peer support, and/or
xi. Discharge planning to coordinate access to housing, social services, and treatment post-discharge, utilizing case managers and peer support.

If MHMR deems a participant not medically appropriate for admittance upon arrival into the MHJDC, MHMR shall coordinate with Emergency Medical Services for transportation to an appropriate emergency room for medical stabilization.

MHMR shall coordinate and link individuals to wrap-around transitional and aftercare services, individualized to the participant, prior to and following discharge from the MHJDC. These services may include one or more of the following services, as appropriate:

i. Community-based case management;
ii. Psychiatric care;
iii. Primary medical care;
iv. Medication management,
v. Psychosocial programming;

vi. Respite beds;
vii. Crisis housing supports;
viii. Housing case management;
ix. Detox/Residential substance use disorder services;
x. Peer support; and/or
xi. Linkage to social services.

5. Appointment of Director. MHMR shall employ a qualified individual ("Director") to maintain appropriate staffing levels and ensure the services provided meet the appropriate standards. The Director shall ensure that MHMR meets the requirements and expectations of this Agreement, monitor the budget and reimbursement requests of the MHJDC, ensure contractual compliance with all subcontractors, and oversee the day-to-day operations of the MHJDC. This Director will also serve as the primary point of contact between Tarrant County and MHMR for the MHJDC.

6. Use of Licensed Personnel. MHMR shall ensure that all personnel providing services pursuant to this Agreement are duly licensed in accordance with the licensure requirements set forth by the professional licensing authorities of the State of Texas and shall comply with all the standards, license, and certification requirements found therein. MHMR shall maintain copies of each required license and shall ensure the receipt of such copies before such personnel is assigned to perform services pursuant to this Agreement and before granting such personnel access to the MHJDC.

7. Performance Pursuant to Industry Standards. MHMR shall provide all services in a manner consistent with industry standards for quality patient care and the standards established by appropriate accrediting agencies. MHMR shall provide all services in a manner consistent with the rules, regulations, statutes, licensing requirements, and standards of all appropriate accrediting or regulatory agencies and entities including, but not limited to, the United States Department of Health and Human Services; the Texas Department of State Health Services; all Texas, federal, and local governmental agencies or bodies that exercise authority over any services provided under this Agreement; and all rules and regulations of the County. MHMR further agrees to provide services in accordance with the statutory guidelines and standards in place at the time of performance.

8. Performance Measurement and Regular Reporting. MHMR shall make reports to Tarrant County on a monthly basis on the below performance measures. Additional measures may be established and reported on as mutually agreed to by MHMR and Tarrant County.

- Number of persons served
- Average Length of Stay
- Number of persons returning within 30 days
- Referrals made to:
    - Housing
    - Substance Abuse
    - Follow Up Mental Health Care
    - Follow Up Medical Care

- Number of Persons enrolled in John Peter Smith (JPS) Connections
- Number of Persons who, upon arrival, refused to voluntarily participate

9. Subcontracting Authority. MHMR shall have the authority to enter into as many contracts as necessary to accomplish the goal of operating an effective and efficient jail diversion center. MHMR agrees to comply with all applicable purchasing laws in choosing and executing any contracts pursuant to this Agreement. MHMR shall subcontract with the Tarrant County Hospital District d/b/a JPS Health Network for the provision of medical services. If not covered under its professional liability policy for services provided under this Agreement, MHMR shall ensure that any individual or entity providing any services under this Agreement have, and provide MHMR evidence of, active professional liability insurance coverage in amounts that conform to the limits provided in this Agreement, as detailed in Article VIII ("Insurance Requirements").

10. Participation in Peer Review. MHMR agrees to initiate its own peer review or quality assurance review regarding any incident at the MHJDC or any personnel providing services pursuant to this Agreement. Each agreement or contract entered into between MHMR and any individual or entity providing services pursuant to this Agreement shall contain a provision incorporating this Agreement by reference as relevant to the responsibilities delegated by MHMR to such individual or entity.

11. Action by Licensing Agency. MHMR expressly agrees to promptly inform Tarrant County of any adverse action, taken by a state regulatory agency, healthcare entity, or professional society, based on the professional competence or professional conduct of MHMR or personnel providing services pursuant to this Agreement. MHMR further agrees to promptly inform Tarrant County in writing, if at any time any required license or certification held by MHMR, or any personnel providing services under this Agreement, expires, is suspended, or is revoked.

12. Additional Requests for Information. MHMR must timely provide all information requested by the Tarrant County Administrator's Office that will assist in assessing MHMR's performance or determining its compliance with this Agreement or funding requirements. MHMR may withhold any information that it is mandated to withhold in compliance with state or federal law.

13. Audit Clause. MHMR agrees that the County will, until the expiration of the federal retention period as referenced in 2 CFR 200.334, have access to and the right to examine at reasonable times any directly pertinent books, documents, papers and records (hard copy, as well as computer generated data) of MHMR involving transactions related to this agreement. This right to audit also extends to any obligations assigned to any subcontracts or agreements formed between MHMR and any subcontractors to the extent that those subcontracts or agreements relate to fulfillment of MHMR's obligations to the County under this agreement. MHMR must agree that the County will have access during normal working hours to all necessary facilities, staff and workspace in order to conduct audits. The County will provide MHMR with reasonable advance notice of intended audits. MHMR must provide records within ten (10) business days or a mutually agreed upon timeline.

14. MHMR will work with the County in the process of applying for grants and other supplemental funding sources for the sustainability of the MHJDC.

III.
PAYMENT

15. MHMR shall submit for reimbursement monthly reports consisting of a financial expenditures report and data tracking spreadsheet to the County reflecting the services rendered and evidencing the amount expended in rendering such services on the fifteenth (15th) day of every month. MHMR agrees to submit all monthly reports in a form to be determined by the County and understands that the form of such reports is subject to change to remain compliant with state and/or federal law.

16. The County shall reimburse MHMR for all eligible expenses reflected on the monthly reports from current revenues available to the County. The total amount of funds to be reimbursed for eligible expenses ("Distributed Funds") (as outlined in Appendix B) to MHMR shall not exceed $5,901,309.00 (FIVE MILLION NINE HUNDRED ONE THOUSAND THREE HUNDRED NINE DOLLARS) for the twelve-month term covered by this Agreement. MHMR may move up to 10% of allocated funds within any budget category without written approval of County, except for Equipment or Indirect Cost budget line items, if the movement is consistent with the budget in Appendix B. In order to move any amount over and above a cumulative total of 10% of allocated funds within any budget category, MHMR will request the reallocation in writing to the County.

17. Distributed Funds may come from federal grants, state grants, or local funds, and may only be used as allowed by the applicable prevailing guidance.

18. MHMR acknowledges that, should Distributed Funds come from a federal grant, it is a Sub-Recipient of the County pursuant to that grant and shall follow guidelines as provided in Appendix A, and all guidance issued by the applicable granting agency in the use of the Distributed Funds.

IV.
DOCUMENTATION

19. MHMR shall keep and maintain, for a period not less than five (5) years after September 30, 2026, any and all records relating to the Distributed Funds.

V.
TERM

20. The term of this Agreement shall commence on October 1, 2025, and shall continue and remain in full force and effect until September 30, 2026, unless terminated earlier in accordance with this Agreement.

VI.
TERMINATION

21. If MHMR becomes excluded, debarred, or suspended from any federal or state program, this Agreement automatically terminates effective on the date of the suspension, revocation, or exclusion, and MHMR must submit a final, formal statement in the manner set out above and below requesting payment. MHMR is not entitled to receive payment under this Agreement for services performed by any personnel who have been excluded, debarred, or suspended under a federal or state program, unless given explicit permission by the County.

22. The County may immediately terminate this Agreement effective upon the receipt by MHMR of written notice of immediate termination if MHMR fails to perform any obligation found herein and the failure:

i. creates a potential threat to health or safety; or
ii. violated a law, ordinance, or regulation designed to protect health or safety.

23. Either party may terminate this Agreement without cause by giving ninety (90) days written notice to the other party.

24. Upon receipt of notice to terminate under paragraph IV(22), MHMR shall discontinue all services in connection with the performance of this Agreement and shall proceed to promptly cancel all existing orders and contracts insofar as such orders or contracts are chargeable to this Agreement. Upon receipt of a notice to terminate under paragraph IV(23), MHMR shall discontinue all services and cancel all contracts and orders chargeable to this Agreement in the same manner as previously described, but effective as of the termination date identified in the notice of termination. Any and all assets purchased under this agreement shall transfer to County for purposes outlined herein.

25. Within thirty (30) days after receipt of a notice of termination under paragraph IV(22), MHMR agrees to submit an invoice showing, in detail, the services performed under this Agreement up to and including the termination date. Within thirty (30) days after the termination date identified in a notice of termination under paragraph IV(23), MHMR agrees to submit an invoice showing, in detail, the services performed under this Agreement up to and including the termination date.

26. Force Majeure. In the event that either party is unable to perform any of its obligations under the Agreement or to enjoy any of the benefits because of natural disaster, global pandemic, actions or decrees of governmental bodies or communications line failure not the fault of the affected party (referred to as a "Force Majeure Event"), the party who has been so affected immediately agrees to give notice to the other party and agrees to do everything possible to resume performance. Upon receipt of such notice, the Agreement is immediately suspended. If the period of nonperformance exceeds ten (10) calendar days from the receipt of notice of the Force Majeure Event, the party whose ability to perform has not been so affected may terminate the Agreement immediately by giving written notice to the other Party.

VII.
INSURANCE REQUIREMENTS

27. MHMR shall acquire and, at all times during the term of this Agreement, maintain comprehensive insurance coverage including , general commercial liability insurance, commercial auto insurance, professional liability insurance and worker's compensation insurance for bodily injury, death, and for property damage, or be self-insured, at a minimum of $1,000,000.00.

28. MHMR shall be responsible for all contents inside the property.

29. Tarrant County shall be responsible for obtaining and keeping property insurance coverage or maintaining sufficient self-insurance coverage on the property, less non-county owned contents.

VIII.
INDEMNIFICATION

30. To the extent allowed by law and the Constitution of the State of Texas, MHMR shall indemnify, defend, and hold harmless the County and each of its agents, officers, and employees from and against any and all claims, actions, causes of action, demands, liabilities, losses, damages, costs and expenses, including but not limited to, reasonable attorney's fee and interest, which any of them at any time sustain or incur (i) by reason of MHMR's negligent act or omission to act and/or its employees arising under this Agreement or other purchasing or sales documents, or (ii) by reason of MHMR's failure to perform its obligations under the terms of this Agreement or other purchasing or sales documents in each case to the extent permitted by the Constitution and laws of the State of Texas.

IX.
NOTICE

31. Any notice required to be given under the provisions of this Agreement shall be in writing and shall be duly served when it shall have been personally delivered to the address below, or deposited, enclosed in a wrapper with the proper postage prepaid thereon, and duly registered or certified, return receipt requested, in a United States Post Office, addressed to the County or MHMR at the following addresses. If mailed, any notice or communication shall be deemed to be

received three (3) days after the date of deposit in the United States Mail. Unless otherwise provided in this Agreement, all notices shall be delivered to the following addresses:

TO THE COUNTY:	TO MHMR:
c/o County Administrator 100 E. Weatherford Fort Worth, Texas 76196	c/o Chief Executive Officer 3840 Hulen St. Fort Worth, Texas 76107

Either Party may change addresses by giving the other Party ten (10) days written notice.

X.
APPLICABLE LAW AND VENUE

32. This Agreement is governed by the laws of the State of Texas.

33. The exclusive venue for any action arising out of, in connection with, or in any way relating to this Agreement shall be in a state or federal court of competent jurisdiction in Tarrant County, Texas.

XI.
MODIFICATIONS

34. This instrument contains the entire Agreement between the Parties relating to the rights herein granted and obligations herein assumed.

35. Any oral or written representations or modifications concerning this instrument shall not be effective excepting a subsequent written modification signed by both Parties.

XII.
COMPLIANCE WITH LAWS

36. MHMR must observe and comply with all applicable federal, state, and local statutes, ordinances, rules, and regulations, including, without limitation, workers' compensation laws, minimum ad maximum salary and wage statutes and regulations, and non-discrimination laws and regulations. MHMR shall be responsible for ensuring its compliance with any laws and regulations applicable to their activities under this agreement, including maintaining any necessary licenses and permits.

XIII.
EXECUTION

37. Multiple Counterparts: The Agreement may be executed in several counterparts. Each counterpart is deemed an original. All counterparts together constitute one and the same

instrument. Each Party warrants that the undersigned is a duly authorized representative with the power to execute the Agreement. This Agreement may be executed in one or more counterparts, each of which will be deemed to be an original copy of this agreement, and all of which, when taken together, shall be deemed to constitute one and the same agreement. The exchange of copies of this agreement and of signature pages by electronic transmission shall constitute effective execution and delivery of this agreement as to the parties and may be used in lieu of the original agreement for all purposes. Signatures of the parties transmitted or executed electronically shall be deemed to be their original signatures for any purpose whatsoever.

SIGNED AND EXECUTED this _____ day of _____, 2025

COUNTY OF TARRANT
STATE OF TEXAS

Separate Electronic Signature Page
Tim O'Hare
County Judge

MY HEALTH MY RESOURCES

Signed by:
Susan Garnett
Susan Garnett
Chief Executive Officer

APPROVED AS TO FORM:

_____
Criminal District Attorney's Office*

CERTIFICATION OF

AVAILABLE FUNDS: $_____

_____
Tarrant County Auditor

*By law, the Criminal District Attorney's Office may only approve contracts for its clients. We reviewed this document as to form from our client's legal perspective. Other parties may not rely on this approval. Instead those parties should seek contract review from independent counsel.

APPENDIX A
SUB-RECIPIENT GUIDANCE

STANDARDS FOR FINANCIAL MANAGEMENT

In accordance with 2 CFR 200 – Uniform Administrative Requirements, Cost Principles, and Audit Requirements for Federal Awards, Organization will develop, implement and maintain financial management and control systems, which include at a minimum accurate payroll, accounting and financial reporting records, cost source documentation, effective internal and budgetary controls, and determination of reasonableness, allowability and allocability of costs, and timely and appropriate audits and resolution findings.

Organization shall maintain an effective accounting system, which will:

- Identify and record valid transactions
- Record transactions to the proper accounting period in which transactions occurred
- Describe transactions in sufficient detail to permit proper classification
- Maintain records that permit the tracing of funds to a level of detail that establishes that the funds have been used in compliance with contract requirements
- Adequately identify the source and application of funds of each grant contract
- Generate current and accurate financial reports in accordance with contract requirements

REPORTS, INSPECTIONS, AND MONITORING REVIEWS

Organization will submit fiscal, progress, programmatic, and other reports as requested by County in the approved format.

Any authorized representatives of the local, state, or federal government have the right, at all reasonable times, to inspect or otherwise evaluate the work performed or being performed and the premises in which it is being performed. Organization will participate in and provide reasonable access to facilities for assisting said representatives. All inspections and evaluations will be performed in such a manner as will not unduly delay the work.

PARTICIPANT RECORDS

Organization grants County, the Inspector General, the Comptroller General of the United States, or any of their duly authorized representatives, the right of timely and unrestricted access to any books, documents, papers, or other records of Organization pertinent to the Contract, in order to make audit, examinations, excerpts, transcripts and copies of such documents. This right also includes timely and reasonable access by County fiscal and program personnel for the purpose of reviewing, interviewing, evaluating, and monitoring related to such documents.

County retains the right of access to Organization's records or the right to obtain copies of said records for audit, litigation, or other circumstances that may arise.

These documents will be maintained and retained by the Organization in accordance with state and federal retention schedules. If any litigation, claim, or audit involving these records begins before the retention period expires, the Organization will retain the records and documents in

accordance with state and federal retention schedule or until litigation, claims, or audit findings are resolved, whichever is later.

ALLOWABLE COSTS

County payment to Organization does not stop the County from determining that certain costs were ineligible for reimbursement. If the County determines that a cost the County has paid for is ineligible for reimbursement, the Organization will refund the ineligible amount to the County. Tarrant County will determine whether costs submitted by Organization are allowable and eligible for reimbursement. If Tarrant County has paid funds to Organization for unallowable or ineligible costs, Tarrant County will notify Organization in writing, and Organization shall return the funds to Tarrant County within thirty (30) calendar days of the date of this written notice. Tarrant County may withhold all or part of any payments to Organization to offset reimbursement for any unallowable or ineligible expenditure that Organization has not refunded to Tarrant County, or if financial status report(s) required are not submitted by the due date(s).

SINGLE AUDIT

An audit must be completed if required by 2 CFR Part 200.500-520. If the guidance does not require a single audit, the Organization will notify County in writing.

Independent Single or Program-Specific Audit. If Organization within Organization's fiscal year, expends a total amount of at least SEVEN HUNDRED FIFTY THOUSAND DOLLARS ($750,000) in federal funds awarded, Organization shall have a single audit or program-specific audit in accordance with the 2 CFR 200. The $750,000 federal threshold amount includes federal funds passed through by way of other agency awards. The audit must be conducted by an independent certified public accountant and in accordance with 2 CFR Part 200 and Government Auditing Standards.

EQUIPMENT

Any purchase of equipment must be consistent with the Uniform Guidance at 2 CFR Part 200 Subpart D. Equipment acquired under this program must be used for the originally authorized purpose. Consistent with 2 CFR 200.313, any equipment acquired using federal funds shall vest in the non-Federal entity.

Procedures for managing equipment must meet the following requirements:

(1) Property records must be maintained that include a description of the property, a serial number or other identification number, the source of funding for the property, who holds title, the acquisition date, and cost of the property, percentage of Federal participation in the project costs for the Federal award under which the property was acquired, the location, use and condition of the property, and any ultimate disposition data including the date of disposal and sale price of the property.

(2) A physical inventory of the property must be taken, and the results reconciled with the property records at least once every two years.

(3) A control system must be developed to ensure adequate safeguards to prevent loss, damage, or theft of the property. Any loss, damage, or theft must be investigated.

(4) Adequate maintenance procedures must be developed to keep the property in good condition.

(5) If the non-Federal entity is authorized or required to sell the property, proper sales procedures must be established to ensure the highest possible return.

Disposition. When original or replacement equipment acquired under FRF is no longer needed for the original project, the non-Federal entity must request disposition instructions from the COUNTY.

APPENDIX B
BUDGET

Expense	Total 10/1/25 to 9/30/26
Salaries	$ 2,942,900.00
Fringe	$ 950,289.00
Travel	$ 831.00
Equipment	$ -
Supplies	$ 6,250.00
Contractual	$ 538,133.00
Training	$ 1,000.00
Client Meals	$ 180,000.00
Telephones	$ 12,100.00
Other	$ 500,070.00
Total Direct Cost	$ 5,131,573.00
Indirect 15%	$ 769,736.00
Total Program Cost	**$ 5,901,309.00**

TARRANT COUNTY
COMMISSIONERS COURT COMMUNICATION

Court Date: December 9, 2025	**Court Order #:**	**Page:** 1 of 3
Department: Budget and Risk Management	**Prepared By:** Rand Otten	**Approved By:** Matthew Jones

SUBJECT:

Consideration of Fourth Amendment to the Interlocal Agreement between Tarrant County and Tarrant County Emergency Services District No. 1

*****CONSENT AGENDA *****

COMMISSIONERS COURT ACTION REQUESTED

It is requested that the Commissioners Court consider the fourth amendment to the Interlocal Agreement (ILA) with the Tarrant County Emergency Services District No. 1 (ESD) as part of the Tarrant County Fiscal Recovery Funds program.

BACKGROUND

On September 27, 2021, the Commissioners Court, through Court Order #136137, approved an ILA between Tarrant County and the ESD to fund the first fiscal year of the ESD's Program to improve access to care in the unincorporated area of Tarrant County.

On April 26, 2022, the Commissioners Court, through Court Order #137956, approved the First Amendment to the ILA with the ESD to increasing the total amount of funding for the emergency services program to $12,000,000.

On December 13, 2022, the Commissioners Court, through Court Order #139901, approved the Second Amendment to the ILA with the ESD, increasing funding for the emergency services program to $15,000,000.

On November 19, 2024, the Commissioners Court, through Court Order #144188, approved the Third Amendment to the ILA with the ESD to allow for eligible program audit and ensure expenditure of all awarded funds within the contracted term.

With approval of the Fourth Amendment, the contract term will be extended until June 30, 2026.

The Criminal District Attorney's Office has reviewed and approved this ILA as to form.

FISCAL IMPACT

There is no fiscal impact as a result of this action.

PASSED AND APPROVED on December 9, 2025.

COUNTY OF TARRANT
STATE OF TEXAS

By: Separate Electronic Signature Page
Tim O'Hare
County Judge

APPROVED AS TO FORM:

_____
District Attorney's Office*

*By law, the District Attorney's Office may only approve contracts for its clients. We reviewed this document as to form from our client's legal perspective. Other parties may not rely on this approval. Instead, those parties should seek contract review from independent counsel.

Attachments

FOURTH AMENDMENT TO INTERLOCAL AGREEMENT BETWEEN TARRANT COUNTY AND TARRANT COUNTY EMERGENCY SERVICES DISTRICT NO.pdf

FOURTH AMENDMENT TO INTERLOCAL AGREEMENT BETWEEN TARRANT COUNTY AND TARRANT COUNTY EMERGENCY SERVICES DISTRICT NO. 1

This Fourth Amendment ("Amendment") to the Interlocal Agreement Between Tarrant County ("County") and Tarrant County Emergency Services District No. 1 ("ESD"), shall be effective on the date the last signature is affixed ("Effective Date"). County and ESD have reviewed the Amendment and make the following findings:

RECITALS

WHEREAS, County and ESD entered into an Interlocal Agreement Between Tarrant County and the Tarrant County Emergency Services District No. 1 ("Agreement") on August 24, 2021 as reflected in Commissioners Court Order Number 136137, distributing State and Local Fiscal Recovery Funds ("FRF") from County to ESD;

WHEREAS, County and ESD entered into the First Amendment to the Interlocal Agreement Between Tarrant County and the Tarrant County Emergency Services District No. 1 ("First Amendment") on April 26, 2022, as reflected in Commissioners Court Order Number 137956, awarding additional FRF from County to ESD;

WHEREAS, County and ESD entered into the Second Amendment to the Interlocal Agreement Between Tarrant County and the Tarrant County Emergency Services District No. 1 ("Second Amendment") on December 13, 2022, as reflected in Commissioners Court Order Number 139901, awarding additional FRF from County to ESD;

WHEREAS, County and ESD entered into the Third Amendment to the Interlocal Agreement Between Tarrant County and the Tarrant County Emergency Services District No. 1 ("Third Amendment") on November 19, 2024, as reflected in Commissioners Court Order Number 144188, to allow for eligible program audit and ensure expenditure of all awarded funds within the contracted term;

WHEREAS, this Amendment is made pursuant to the authority of chapter 791 of the Texas Government Code;

WHEREAS, it is the desire of ESD and County to amend the contract term and extend it until June 30, 2026;

WHEREAS, County and ESD will continue to make any and all payments or performance required by the Agreement and this Amendment from current revenues legally available.

NOW THEREFORE, County and ESD agree as follows:

1. County and ESD accept this Amendment, adjusting the contract term from December 31, 2025 to June 30, 2026.

2. Except as amended herein, the Agreement is unchanged.

SIGNED AND EXCUTED this _____ day of _____2025.

COUNTY OF TARRANT

Separate Electronic Signature Page

Tim O'Hare
County Judge

EMEGENCY SERVICES DISTRICT NO. 1

C. Russell Shelley

C. Russell Shelley
Executive Director/Fire Chief

APPROVED AS TO FORM:

_____
Criminal District Attorney's Office*

CERTIFICATION OF

AVAILABLE FUNDS: $_____

_____
Tarrant County Auditor

*By law, the Criminal District Attorney's Office may only approve contracts for its clients. We reviewed this document as to form from our client's legal perspective. Other parties may not rely on this approval. Instead those parties should seek contract review from independent counsel.

TARRANT COUNTY
COMMISSIONERS COURT COMMUNICATION

Court Date: December 9, 2025	**Court Order #:**	**Page:** 1 of 6
Department: Budget and Risk Management	**Prepared By:** Elliot Lester	**Approved By:** Travis Yarbrough

SUBJECT:

Consideration of Risk Management Board Minutes and Recommended Claims

***** CONSENT AGENDA *****

COMMISSIONERS COURT ACTION REQUESTED

It is requested that the Commissioners Court consider the board minutes and payment of the following claims recommended by the Risk Management Board and authorize the County Auditor to pay funds before appearing on the claims register.

BACKGROUND

The Risk Management Board held a meeting on Wednesday, November 5, 2025, November 12, 2025, and November 19, 2025. The minutes resulting from this meeting are attached for review.

The claims recommended by the Risk Management Board are as follows:

Tran's Auto Body (Simon Nguyen)
Claim No. 25-10084 (Public Health)
$983.64

On November 11, 2025, the Commissioners Court, through Court Order #146225, approved payment for supplemental repairs to Mr. Nguyen's vehicle due to a collision with a County vehicle. Tran's Auto Body submitted a final supplement for additional work required to repair the damage. The Risk Management Board recommends payment of $983.64 for full and final settlement of the property portion of this claim.

Calhoun Cline
Claim 26-20003 (Pct. 2 Maintenance)
$2,500.00

On October 13, 2025, County equipment damaged property owned by Calhoun Cline. The Risk Management Board recommends payment of $2,500.00 for full and final settlement of this claim.

Hailey Halter
Claim 26-10007
$497.14 (Plus Rental and Towing)

On October 23, 2025, a County vehicle damaged a vehicle belonging to Hailey Halter. The Risk Management Board recommends payment of $497.14 plus rental car and towing for the property damage of this claim.

Core Construction Services of Texas, Inc.

Claim 26-10003 (Constable Pct. 4)
$9,365.08

On October 7, 2025, a County vehicle damaged a vehicle belonging to Core Construction Services of Texas, Inc. The Risk Management Board recommends payment of $9,365.08 for full and final settlement of this claim.

FISCAL IMPACT

Payment of these items will be from Tarrant County's Self-Insurance Funds.

Attachments

November 5, 2025 Minutes.pdf

November 12, 2025 Consent Minutes.pdf

November 19, 2025 Consent Minutes.pdf

TARRANT COUNTY
BUDGET & RISK MANAGEMENT

TARRANT COUNTY ADMINISTRATION BUILDING
100 E. WEATHERFORD – 4TH FLOOR, ROOM 403
FORT WORTH, TEXAS 76196-0102

HELEN H. GIESE
DIRECTOR

RISK MANAGEMENT BOARD MEETING

November 5, 2025

M I N U T E S

Call to Order

PRESENT: Representatives:

Josh Underwood	(Auditor's Office)
Jon Thorwald	(Sheriff's Office)
Matthew Jones	(Budget and Risk Management)
Mallory Schuit	(Criminal District Attorney)
Joseph Jackson	(Transportation)
Maegan South	(Administrator's Office)

Guest: **Jeanine Kabela**

I. Approval of October 29, 2025, Consent Minutes

Maegan South moved for approval of October 29, 2025, Consent Minutes of the Risk Management Board, Joseph Jackson seconded; motion carried with Mallory Schuit and Jon Thorwald abstaining.

II. Consideration of Claims

A. Jeanine Kabela **$ 60,000.00**
Claim No. 25-20041 (Sheriff)

Matthew Jones made a **motion to approve ITEM II A for $15,465.02.** Maegan South seconded; motion carried 5-1 with Josh Underwood against.

B. Omolola Sewell (Plus Rental) **$ 1,659.79**
Claim No. 25-10086 (Constable Pct. 7)

Joseph Jackson made a **motion to deny ITEM II B.** Maegan South seconded; motion carried unanimously.

C. Calhoun Cline **$ 2,500.00**
Claim No. 26-20003 (Pct. 2 Maintenance)

Maegan South made a **motion to approve ITEM II C.** Josh Underwood seconded; motion carried unanimously.

D. **1. Hailey Halter (Plus Towing)** **$ 497.14**
2. Appraisal Service of Arkansas **$ 110.00**
3. Reads Auto Collision **$ 4,884.10**
4. Appraisal Service of Arkansas **$ 110.00**
Claim No. 26-10007 (Sheriff)

Maegan South made a **motion to approve ITEM II D plus rental.** Joseph Jackson seconded; motion carried unanimously.

E. **Core Construction Services of Texas, Inc.** **$ 9,365.08**
Claim No. 26-10003 (Constable Pct. 4)

Joseph Jackson made a **motion to approve ITEM II E.** Josh Underwood seconded; motion carried unanimously.

F. **Reads Auto Collision** **$ 2,827.90**
Claim No. 25-10083 (Sheriff)

Josh Underwood made a **motion to approve ITEM II F.** Maegan South seconded; motion carried unanimously.

G. **Reads Auto Collision (Supplement)** **$ 147.83**
Claim No. 25-10085 (Sheriff)

Maegan South made a **motion to approve ITEM II G.** Joseph Jackson seconded; motion carried unanimously.

H. **Appraisal Service of Arkansas** **$ 110.00**
Claim No. 25-10073 (Pct. 3 Maintenance)

Maegan South made a **motion to approve ITEM II H.** Jon Thorwald seconded; motion carried unanimously.

III. Consideration of Services

I. **Occupational Health Centers of the SW, P.A.** **$ 2,504.50**
(Employee Physicals/Account # N01-0020237983)
Invoice #326826827 10/22/2025-10/28/2025

Josh Underwood made a **motion to approve ITEM III I.** Matthew Jones seconded; motion carried unanimously.

IV. Discussion Items

Total Loss of County Vehicle
Claim No. 25-10073 (Pct. 3 Maintenance)

The Risk Management Board unanimously agreed to consider vehicle a total loss.

V. Next Meeting: Wednesday, November 12, 2025, at 11:00 A.M., 4th Floor, Room 403

TARRANT COUNTY
BUDGET & RISK MANAGEMENT

TARRANT COUNTY ADMINISTRATION BUILDING
100 E. WEATHERFORD – 4TH FLOOR, ROOM 403
FORT WORTH, TEXAS 76196-0102

HELEN H. GIESE
DIRECTOR

RISK MANAGEMENT BOARD MEETING

November 12, 2025

C O N S E N T M I N U T E S

Call to Order

PRESENT: Representatives:

Craig Driskell	(Sheriff's Office)
Maegan South	(Administrator's Office)
Josh Underwood	(Auditor's Office)
Matthew Jones	(Budget and Risk Management)
Joseph Jackson	(Transportation)

I. Approval of November 5, 2025, Minutes

The Minutes from November 5, 2025, Risk Management Board were approved unanimously.

II. Consideration of Claims

A. Read's Auto Collision (Supplement) **$ 1,130.34**
Claim No. 26-10011 (Sheriff)

Item II A was approved unanimously.

III. Consideration of Services

B. Occupational Health Centers of the SW, P.A.
(Employee Physicals/Account # N01-0020237983)
Invoice #326859623 10/29/2025-11/04/2025 **$ 6,452.50**

C. Esquire Deposition Solutions, LLC **$ 641.25**
Claim No. 23-10083 (Sheriff)

Items III B and C were approved unanimously.

IV. Next Meeting: Wednesday, November 19, 2025, at 11:00 A.M., 4th Floor, Room 403

TARRANT COUNTY
BUDGET & RISK MANAGEMENT

TARRANT COUNTY ADMINISTRATION BUILDING
100 E. WEATHERFORD – 4TH FLOOR, ROOM 403
FORT WORTH, TEXAS 76196-0102

HELEN H. GIESE
DIRECTOR

RISK MANAGEMENT BOARD MEETING

November 19, 2025

C O N S E N T M I N U T E S

Call to Order

PRESENT:	**Representatives:**	**Craig Driskell**	(Sheriff's Office)
		Maegan South	(Administrator's Office)
		Josh Underwood	(Auditor's Office)
		Matthew Jones	(Budget and Risk Management)
		Joseph Jackson	(Transportation)
		Roxie Held	(Human Resources)

I. Approval of November 12, 2025, Consent Minutes

The Consent Minutes from November 12, 2025, Risk Management Board were approved unanimously.

II. Consideration of Claims

A.	**Trans Auto Body (Supplement)** Claim No. 25-10084 (Public Health)	**$**	**983.64**
B.	**1. Reads Auto Collision**	**$**	**14,972.92**
	2. Appraisal Service of Arkansas Claim No. 26-10012 (Sheriff)	**$**	**110.00**

Items II A and B were approved unanimously.

III. Consideration of Services

C.	**Zeleskey Mediations** Claim No. 18-20069 (Sheriff)	**$**	**775.00**

Item III C was approved unanimously.

IV. Next Meeting: Wednesday, December 3, 2025, at 11:00 A.M., 4th Floor, Room 403

TARRANT COUNTY
COMMISSIONERS COURT COMMUNICATION

Court Date: December 9, 2025	**Court Order #:**	**Page:** 1 of 10

Department: Budget and Risk Management	**Prepared By:** Krysten L. Louden	**Approved By:** Matthew Jones

SUBJECT:

Consideration of Fiscal Year 2025 and Fiscal Year 2026 Appropriation Adjustments

***** CONSENT AGENDA *****

See Attachment for Additional Information

Attachments

(CONSENT) FY 2025 12.16.2025.pdf
(CONSENT) FY 2026 12.16.2025.pdf

COMMISSIONERS COURT COMMUNICATION

REFERENCE NUMBER

DATE 12/09/25

SUBJECT:

FY 2025 APPROPRIATION ADJUSTMENTS

***** CONSENT *****

10000-2025 GENERAL FUND

1140100000 - Non-Departmental		
595056	Reserves	(7,791,887)
1310200000 - Tax Motor Vehicle		
511011	Salaries	29,504
1310300000 - Tax Ad Valorem		
521115	Postage	(29,504)
1420000000 - Elections		
511011	Salaries	57,727
521115	Postage	(57,727)
2110010000 - Sheriff Office Admin		
511011	Salaries	3,160,241
2120910000 - Sheriff Office Confinement		
511011	Salaries	4,280,541
2210100000 - Constable Precinct 1		
511011	Salaries	20,325
522041	Clothing	(5,126)
588261	Education	(5,098)
2230100000 - Constable Precinct 3		
511011	Salaries	4,066
522041	Clothing	(4,066)
2250100000 - Constable Precinct 5		
511011	Salaries	39,126
522041	Clothing	(1,000)
588261	Education	(1,150)

DISPOSITION BY COMMISSIONERS COURT

SUBMITTED BY:	Budget & Risk Management	PREPARED BY: APPROVED BY:	Samantha Green Matthew Jones

SUBJECT:

FY 2025 APPROPRIATION ADJUSTMENTS

General Fund Cont.'d

2270100000 - Constable Precinct 7		
511011	Salaries	8,744
522041	Clothing	(1,240)
588261	Education	(3,868)
2610110000 - Juvenile Services		
511011	Salaries	544,256
569011	Professional Services	(544,256)
4111500000 - 48th District Court		
511011	Salaries	2,348
521011	Supplies	(1,140)
585154	Interpreter Fees	(500)
4112100000 - 67th District Court		
511011	Salaries	1,680
521011	Supplies	(60)
575614	Visiting Court Reporter	(1,620)
4112500000 - 96th District Court		
511011	Salaries	2,987
585154	Interpreter Fees	(500)
4113100000 - 141st District Court		
511011	Salaries	9,665
521011	Supplies	(1,880)
588261	Education	(500)
4113500000 - 153rd District Court		
511011	Salaries	2,630
521011	Supplies	(1,630)
588261	Education	(1,000)
4115100000 - 348th District Court		
511011	Salaries	2,706
575614	Visiting Court Reporter	(706)
588261	Education	(2,000)

SUBJECT:

FY 2025 APPROPRIATION ADJUSTMENTS

General Fund Cont.'d

4115500000 - 352nd District Court		
511011	Salaries	2,286
575614	Visiting Court Reporter	(2,286)
4120300000 - Criminal District Court 3		
511011	Salaries	18,622
4120400000 - Criminal District Court 4		
511011	Salaries	851
4124100000 - 371st District Court		
511011	Salaries	9,062
4124500000 - 372nd District Court		
511011	Salaries	12,961
584011	Counsel Fees	(8,725)
585162	Capital Murder - Expert Witness	8,600
4125000000 - 485th District Court		
511011	Salaries	11,474
4125500000 - Magistrate Court		
569011	Professional Services	(8,600)
4132100000 - 322nd District Court		
511011	Salaries	4,534
584011	Counsel Fees	(600)
4133100000 - 324th District Court		
511011	Salaries	4,853
584011	Counsel Fees	(4,853)
4133500000 - 325th District Court		
511011	Salaries	4,136
526021	Equipment Maintenance	(4,136)

SUBJECT:

FY 2025 APPROPRIATION ADJUSTMENTS

General Fund Cont.'d

4134100000 - 360th District Court		
511011	Salaries	23,357
521011	Supplies	(3,679)
575614	Visit Court Reporter	(1,823)
584011	Counsel Fees	(11,053)
588261	Education	(650)
4192500000 - Criminal Courts		
511011	Salaries	196,550
521011	Supplies	(9,921)
588261	Education	(9,510)
4192600000 - Grand Jury		
511011	Salaries	4,379
521011	Supplies	(908)
4192700000 - Criminal Attorney		
511011	Salaries	18,412
521011	Supplies	(4,055)
584011	Counsel Fees	(14,357)
4210100000 - County Court at Law 1		
511011	Salaries	17,087
521022	Supplies	(591)
575614	Visiting Court Reporter	(1,867)
585031	Reporter's Records	(3,940)
4220100000 - County Criminal Court 1		
511011	Salaries	3,886
575613	Visiting Judges	(3,886)
4220200000 - County Criminal Court 2		
511011	Salaries	376
575613	Visiting Judges	(376)

SUBJECT:

FY 2025 APPROPRIATION ADJUSTMENTS

General Fund Cont.'d

4220300000 - County Criminal Court 3		
511011	Salaries	7,818
521011	Supplies	(386)
575613	Visiting Judges	(1,277)
4220500000 - County Criminal Court 5		
511011	Salaries	2,100
575613	Visiting Judges	(2,100)
4220600000 - County Criminal Court 6		
511011	Salaries	2,406
4220700000 - County Criminal Court 7		
511011	Salaries	6,373
575614	Visiting Court Reporter	(6,373)
4220800000 - County Criminal Court 8		
511011	Salaries	1,506
575613	Visiting Judges	(1,506)
4220900000 - County Criminal Court 9		
511011	Salaries	2,291
588261	Education	(2,291)
4221100000 - County Criminal Court 10		
511011	Salaries	1,565
575613	Visiting Judges	(1,565)
4230200000 - Probate Court 2		
511011	Salaries	19,745
521011	Supplies	(2,501)
569011	Professional Services	(1,023)
584031	Counsel Fees Probate	(3,111)
4420100000 - JP Precinct 2		
521011	Supplies	(1,700)
565021	Armored Car Messenger	2,700
575613	Visiting Judges	(1,000)

SUBJECT:

FY 2025 APPROPRIATION ADJUSTMENTS

General Fund Cont.'d

4430100000 - Justice of the Peace 3		
511011	Salaries	11,543
521011	Supplies	(1,270)
565021	Armored Car Messenger	(3,015)
575613	Visiting Judges	(3,999)
588261	Education	(3,259)
4440100000 - Justice of the Peace 4		
511011	Salaries	19,550
521011	Supplies	(5,845)
565021	Armored Car Messenger	(120)
575613	Visiting Judges	(5,201)
584011	Counsel Fees	(800)
588261	Education	(319)
4450100000 - Justice of the Peace 5		
511011	Salaries	22,132
521011	Supplies	(3,328)
575613	Visiting Judges	(992)
584011	Counsel Fees	(2,050)
588261	Education	(396)
4850100000 - Jury Services		
511011	Salaries	2,491
585583	Petit Jury Services	(2,491)
5910200000 - Historical Archives		
511011	Salaries	2,072
578025	Software Maintenance	(2,072)
6410100000 - Commissioner Precinct 4		
511011	Salaries	8,893
569011	Professional Services	(8,893)

SUBJECT:

FY 2025 APPROPRIATION ADJUSTMENTS

General Fund Cont.'d

6840200000 - Fleet Services

521091	Inventory Variance	45,700
576182	Fuel	(45,700)

22300-2025 CONSUMER HEALTH FUND

5100011000 - Public Health

511011	Salaries	73,536
521011	Supplies	(350)
565021	Armored Car Messenger	350
595055	Undesignated	(73,536)

22500-2025 DISPUTE RESOLUTION

4840100000 - Dispute Resolution

511011	Salaries	23,898
569011	Professional Services	(23,898)

25100-2025 VEHICLE INVENTORY TAX

1310300000 - Tax Ad Valorem

511011	Salaries	41,395
569011	Professional Services	(41,395)

26100-2025 ROAD AND BRIDGE

6310200000 - Precinct 3 Garage

523011	Parts and Supplies	300
531021	Electricity	(300)

6310300000 - Precinct 3 Maintenance

525077	Wireless Data Access	150
558097	Asphalt-Rock/Hot Mix	(150)

6510100000 - Right of Way

511011	Salaries	142
588261	Education	(142)

68401000000 - Transportation

511011	Salaries	142,238
569011	Professional Services	(142,238)

SUBJECT:

FY 2025 APPROPRIATION ADJUSTMENTS

45100-2025 NON-DEBT CAPITAL

2310100000 - Medical Examiner

540000	Capital	0
	Reduce: LC/MS System ($115)	
	Increase: Laboratory Evidence Refrigerator $115	

T0450-2025 PUBLIC HEALTH - 1115 WAIVER

5100011000 - Public Health

521011	Supplies	(1,350)
531061	Utilities	1,350

T3300-2026 PRE-TRIAL CSCD BOND SUPERVISION UNIT

2510500000 - CSCD

572222	Laboratory Costs	25,750
595055	Undesignated	(25,750)

T6000-2025 MISC DONATIONS - FAMILY COURT SERVICES

Revenue

1810320000 - IT Service Delivery

483012	Auction - Non Tax	372

4850100000 - Jury Services

484001	Donations - Jury Check	716

Budget

4830300000 - DRO Family Court Services

500000	Rollup - All Expenditures	1,088

23000-2024 FAMILY PROTECTIVE FUND

Revenue

4810010000 - District Clerk

424218	Family Protection	60

Budget

4810010000 - District Clerk

569011	Professional Services	60

COMMISSIONERS COURT COMMUNICATION

REFERENCE NUMBER

DATE 12/09/25

SUBJECT:

FY 2026 APPROPRIATION ADJUSTMENTS

***** CONSENT *****

10000-2026 GENERAL FUND

1140100000 - Non-Departmental		
595055	Undesignated	(6,000)
1820100000 - Human Resources		
511011	Salaries	(341,455)
575611	Contract Labor	341,455
1860100000 - Facilities Administration		
532026	Electronic Equipment Maintenance	(42,625)
578025	Software Maintenance and Licenses	42,625
2230100000 - Constable Precinct 3		
576182	Fuel	17
588291	Travel	(17)
2610410000 - Juvenile Detention Operations		
511011	Salaries	(5,000)
575611	Contract Labor	5,000
4124100000 - 371st District Court		
575614	Visiting Court Reporters	10,000
4230200000 - Probate Court 2		
569011	Professional Services	300
585081	Court Visitor	(300)
4880100000 - Courts/Judiciary		
584011	Counsel Fees - Courts	(10,000)
5210100000 - Human Services		
572012	Utility Assistance	6,000

DISPOSITION BY COMMISSIONERS COURT

SUBMITTED BY:	Budget & Risk Management	PREPARED BY: APPROVED BY:	Samantha Green Matthew Jones

SUBJECT:

FY 2026 APPROPRIATION ADJUSTMENTS

24200-2026 - CONTINUING EDUCATION FUND

4230100000 - Probate Court 1

588261	Education	(200)

4230200000 - Probate Court 2

588261	Education	(200)

4880100000 - Courts/Judiciary

585012	Probate Presiding Judge	400

45100-2026 NON-DEBT CAPITAL

2240100000 - Constable Precinct 4

540000	Capital	0
	Reduce: Pistols ($1,500)	
	Increase: Copier $1,500	

2310100000 - Medical Examiner

540000	Capital	
	Reduce: Solid-Phase Extraction Manifold ($87)	0
	Increase: Homogenizer $77	
	Increase: Zebra Thermal Desktop Printer $10	

2610410000 - Juvenile Detention

540000	Capital	0
	Reduce: Range Security Body Scanner ($80)	
	Increase: Mobile Heating Cabinet $80	

T0450 - PUBLIC HEALTH - 1115 WAIVER

1140100000 - Non-Departmental

595055	Undesignated	(480,000)

5100011000 - Public Health

592011	Grant Matching Funds	480,000

TARRANT COUNTY
COMMISSIONERS COURT COMMUNICATION

Court Date: December 9, 2025	**Court Order #:**	**Page:** 1 of 1
Department: Community Development	**Prepared By:** Susan Au	**Approved By:** James A. McClinton, Director

SUBJECT:

Request for Public Hearing - Tuesday, January 13, 2026, at 10:00 A.M. - To Consider Amendment No. 1 to the Tarrant County 2025-2029 Consolidated Plan and Program Year 2025 Action Plan

***** CONSENT AGENDA *****

COMMISSIONERS COURT ACTION REQUESTED

It is requested that the Commissioners Court conduct a public hearing on Tuesday, January 13, 2026 at 10:00 a.m., to consider Amendment No. 1 to the Tarrant County 2025-2029 Consolidated Plan and Program Year (PY) 2025 Action Plan.

BACKGROUND

A public hearing has been requested to gather public comments regarding an amendment to the Tarrant County 2025-2029 Consolidated Plan and PY 2025 Action Plan. This amendment will add an additional goal of "Rapid Re-housing" within the 2025-2029 Consolidated Plan and reallocate ESG funds to add a rapid re-housing project to the PY 2025 Action Plan.

Rapid Re-housing assistance is designed to help individuals and families experiencing homelessness quickly secure permanent housing and maintain stability through a combination of rental assistance and supportive services. Including this goal in the Consolidated Plan will allow Community Development to use ESG funds for rapid re-housing through PY 2029. Allocating funds to this program broadens the available funding sources to better serve clients amid uncertain federal funding conditions. A total of $20,000 will be reallocated from the PY 2025 ESG-funded homelessness prevention program, reducing its budget from $112,594.84 to $92,594.84, and redirected to support rapid re-housing efforts. This reallocation will not affect the homelessness prevention program's service capacity, as it is supported by multiple grants.

The process involves public notice, a minimum thirty (30) day public comment period, and a public hearing. Public comments will be accepted until the end of the public hearing on January 13, 2026.

FISCAL IMPACT

Costs associated with the administration of this grant will be paid with grant funds through grant # E25UC480001.

TARRANT COUNTY
COMMISSIONERS COURT COMMUNICATION

Court Date: December 9, 2025	**Court Order #:**	**Page:** 1 of 28
Department: Community Development	**Prepared By:** Wren Davis	**Approved By:** James McClinton

SUBJECT:

RFQ-2025ENG-54-50 Consideration of an Engineering Contract between Tarrant County and MJ Thomas Engineering for the City of River Oaks 51st Year Community Development Block Grant Project

***** CONSENT AGENDA *****

COMMISSIONERS COURT ACTION REQUESTED

It is requested that the Commissioners Court consider approving an engineering contract between Tarrant County and MJ Thomas Engineering for engineering services for the city of River Oaks 51st year Community Development Block Grant (CDBG) project.

BACKGROUND

On June 3, 2025, the Commissioners Court, through Court Order #145328, approved the 2025-2029 Consolidated Plan which included the 2025 Action Plan. The Action Plan included provisions for the Tarrant County CDBG Program for PY 2025 (July 1, 2025 - June 30, 2026). CPD Notice CPD-25-02, Section V.A., issued January 14, 2025, provides conditional HUD approval to incur pre-award costs for PY 2025 and provides a waiver allowing those costs. Under HUD regulations (24 CFR 570.248) engineering services for 2025 (51st Year) CDBG projects qualify as eligible pre-award costs. These services are essential for timely completion of infrastructure projects outlined in the 2025 Action Plan.

In accordance with 24 CFR 570.200(h), pre-award costs may not exceed the greater of $300,000.00 or 25 percent (25%) of the annual grant award. For PY 2025, this limit is $1,040,862.75 (25% of $4,163,451.00). Environmental review documentation for engineering services has been completed as required.

Consistent with HUD guidelines, letters of qualifications from engineering firms were received and evaluated by the Community Development Department. MJ Thomas Engineering is recommended for award for the 2025 (51st Year) CDBG project. The proposed total engineering cost is $261,130.50, with an engineering fee of $16,999.00 for the City of River Oaks project. This amount is within the allowable threshold.

The Criminal District Attorney's Office has approved this contract as to form.

FISCAL IMPACT

Funds are available through the Community Development Block Grant (CDBG) #B-25-UC-48-0001. Upon approval of the claim for payment under this contract, funds will be drawn from the U.S. Treasury through the U.S. Department of Housing and Urban Development (HUD's) electronic transfer system to Tarrant County's bank account.

PASSED AND APPROVED on December 9, 2025.

COUNTY OF TARRANT
STATE OF TEXAS

By: Separate Electronic Signature Page
Tim O'Hare
County Judge

APPROVED AS TO FORM:

_____
District Attorney's Office*

*By law, the District Attorney's Office may only approve contracts for its clients. We reviewed this document as to form from our client's legal perspective. Other parties may not rely on this approval. Instead, those parties should seek contract review from independent counsel.

Attachments

MJ Thomas Engineering Court Backup 51st.pdf

CONTRACT FOR ENGINEERING SERVICE

STATE OF TEXAS §
§
COUNTY OF TARRANT §

This agreement is made and entered into this 15th day of September, 2025, by and between the TARRANT COUNTY (the "Owner"), acting by and through its duly authorized officer, and MJ Thomas Engineering (the "Engineer").

The Tarrant County Community Development Department may perform the duties and responsibilities of the Owner under this Contract.

1. The Owner intends to:

Make Sewer improvements along 5000-5100 blocks of Thurston Road

Such improvements are hereinafter referred to as the "Project",

Located in the city of: River Oaks

Identified by Project Number: B-25-UC-48-0001-54-50

2. BASIC AGREEMENT. The Owner agrees to employ the Engineer and the Engineer agrees to perform professional engineering services in connection with the Project and the Owner agrees to pay to the Engineer the lump sum paid in increments provided for as follows:

3. THE ENGINEER'S BASIC COMPENSATION. For and in consideration of the services to be rendered by the Engineer, the Owner shall pay, and the Engineer shall receive the compensation hereinafter set forth, for the Preliminary, Design, and Construction Phases of the work.

Total Compensation shall be based on a lump sum of $ 16,999.00 for all work in this Contract.

A. PRELIMINARY PHASE COMPENSATION

Payment for services in the Preliminary Phase shall be made to the Engineer in a sum equal to ten percent (10%) of the total lump sum.

Partial payments for services in the Preliminary Phase shall be made monthly in proportion to that part of the services in the Preliminary Phase which has been accomplished, as evidenced by monthly statements submitted by the Engineer to the Owner. Final payment for services in the Preliminary Phase shall be payable upon

submission to the Owner the required report, sketches, and estimates, and upon the Owner's acceptance within 30 days after submission.

B. DESIGN PHASE COMPENSATION

Payment for services in the design Phase shall be made to the Engineer in a sum equal to seventy percent (70%) of the total lump sum.

Partial payments for services in the Design Phase shall be made monthly, in proportion to that part of the services in the Design Phase which has been accomplished as evidenced by monthly statements submitted by the Engineer to the Owner. Final Payment for services authorized in the Design Phase shall be due upon completion of these services.

C. CONSTRUCTION PHASE COMPENSATION

Payment for services in the Construction Phase shall be made to the Engineer in a sum equal to twenty percent (20%) of the total lump sum.

This sum will be paid in monthly installments in proportion to the construction work completed, based on the Engineer's estimate prepared for monthly payments to contractors, plus the actual value of all materials and equipment purchased or furnished directly by the Owner for the Project. Upon completion of all work authorized in the Construction Phase, the Engineer will be paid the remainder of the charge for this Phase.

4. CHARACTER AND EXTENT OF SERVICES

Engineer understands the Grantee must comply with the requirements of the Build America, Buy America (BABA) Act, 41 USC 8301 note, and all applicable rules and notices, as may be amended, if applicable to the Grantee's infrastructure project. Pursuant to HUD's Notice, "Public Interest Phased Implementation Waiver for FY 2022 and 2023 of Build America, Buy America Provisions as Applied to Recipients of HUD Federal Financial Assistance" (88 FR 17001), any funds obligated by HUD on or after the applicable listed effective dates, are subject to BABA requirements, unless excepted by a waiver.

The Engineer shall render the following professional services necessary for development of the project:

A. PRELIMINARY PHASE SERVICES

(1) Attend preliminary conferences with the Owner and other interested parties regarding the Project.

(2) Establish the scope, and advise the Owner, of any soil and foundation investigations or any special surveys or special testing which, in the opinion of the Engineer, may be required for the proper execution of the project; and arrange with the Owner for the conduct of such investigations and tests. (The performance of such investigations and tests are not a part of the Engineer's basic services, and compensation therefore is not included in the Basic Charge.)

Additional services shall be furnished or obtained only with written approval of the Owner, in which case compensation shall be determined at the time these additional services are required.

(3) Perform the preliminary engineering services in connection with the Project and to set forth clearly the Engineer's recommendations in sufficient detail to indicate clearly the problems involved and the alternate solutions available to the Owner. Services include but are not limited to preliminary layouts, sketches, and cost estimates for the Project.

(4) Prepare and furnish the Owner two (2) copies of the written preliminary report, including preliminary layouts, sketches, and cost estimates. Also supply all utility companies with preliminary plans and cut sheet as applicable.

(5) Inform utility companies in writing that they may be affected by the project so they may start planning to avoid conflict. Should the planned project be increased, or decreased utility companies will be notified immediately.

B. DESIGN PHASE SERVICES

(1) Furnish the Owner, where required by the circumstances of the assignment, the engineering data necessary for applications for routine permits by local, state, and federal authorities.

(2) Perform field surveys to collect information which, in the opinion of the Engineer, is required in the design of the Project.

(3) Prepare detailed specifications and contract drawings for construction authorized by the Owner. These designs shall in all respects exemplify the application of sound engineering principles.

(4) Prepare detailed cost estimates and proposals of authorized construction, which shall include summaries of bid items and quantities which will be based, wherever practical, on the unit price system of bidding.

(5) Post Owner-approved contract documents and plans that will include notices to bidders and proposals on an approved digital website for distribution. Additionally, the Engineer will provide six (6) copies of approved plans for field use and up to five (5) unbound contract documents for execution. The Owner will furnish one set of "standard documents" and the applicable Federal Minimum Wage Rates for the Engineer's use in preparing the final documents.

(6) Complete the design phase within three (3) months from the date of this Contract, including plans, specifications, all contract documents and preliminary review by Owner and utility companies, in keeping with the project funding limitations.

Failure to complete the plans and specifications within the three-month time limit for completions of these plans and specifications will result in liquidated

damages of $50.00 per consecutive calendar day until these plans are submitted.

(7) The Engineer, or its appointed survey consultant, will provide control staking consisting of setting lines and grades for the entire project. The staking will be completed during the preliminary review of the design/construction plans. This will ensure accuracy at the job site and speed up review and re-alignment of utilities in the field.

(8) Provide a set of approved plans and specification to each concerned utility company with forecast of construction start date.

C. CONSTRUCTION PHASE SERVICES

(1) Assist the Owner in opening of bids and provide the tabulation of bids to Owner and project city accompanied by investigation report of previous work record and references of low bidder. Provide Owner with information concerning low bidder and project city's recommended action on all proposals received.

(2) Furnish general representations and observations of the work during the construction phase as follows: review shop drawings pursuant to the General Conditions of the Construction Contract; make at least three (3) visits per month to project site by office staff; review such work of testing laboratories as may be required by the Owner; keep the Owner informed of the progress of the work; and issue all instructions of the Owner to the Contractor.

It shall be the duty and responsibility of the Engineer to prepare change orders as required and review the application for payment submitted by the Contractor. The Engineer shall use due diligence to detect defects and deficiencies in the work of the Contractor and disapprove or reject work as failing to conform to both the Contract Documents and the plans and specifications.

(3) Consult and advise the Owner, make recommendations to the Owner regarding materials and workmanship, and prepare and issue change orders with Owner's Approval.

(4) Review for compliance with the information given by Contract Documents the samples, catalog data, schedules, shop drawings, laboratory, shop and mill tests of material and equipment and other data which the Contractor is required to submit and assemble written guarantees which are required by the Contract Documents.

(5) Prepare, review, and certify monthly and final estimates for Owner's payments to Contractor(s) including verification of contractor's use of American-made products where required by the Build America, Buy America Act (BABA).

(6) Conduct, in company with the Owner, a final inspection of the Project in compliance with the Contract Documents and make recommendations to the Owner regarding the completion and acceptance of the Project, in written form.

(7) Revise contract drawings to provide record drawings of the completed Project and furnish one set of prints to the Owner. The Engineer will exercise the usual degree of care in preparing these drawings; but he shall not be required to guarantee the accuracy of the record drawings.

(8) Advise the contractor of any and all specific instructions from the Owner pertaining to the Project.

5. AUTHORIZATION OF SERVICES. The Engineer is authorized to proceed with Preliminary Phase services for the Project upon execution of this Agreement. The Owner's authorization must be obtained prior to proceeding to each subsequent phase of services.

6. PERIOD OF SERVICE. This agreement shall be effective upon execution by the Owner and the Engineer and shall remain in force and effect until work is completed or terminated under the provisions hereinafter provided in Section 10.

7. COORDINATION WITH THE OWNER. The Engineer shall hold periodic conferences with the Owner, or its representatives, in order to obtain the full benefit of the Owner's experience and knowledge of existing needs and facilities, and to be consistent with its current policies and construction standards.

8. REVISION TO DRAWINGS AND SPECIFICATIONS. Engineer will make, without expense to the Owner, such revisions of the preliminary drawings as may be required to meet the needs of the Owner.

9. OWNERSHIP OF DOCUMENTS. Original documents, plans, designs, and survey notes developed in connection with services performed hereunder belong to and shall remain the property of the Owner. The Engineer may retain reproducible copies of such documents.

10. TERMINATION. A party to this Agreement may terminate the Agreement by giving the other seven (7) days' notice in writing. Upon delivery of such notice by the Owner to the Engineer, and upon expiration of the seven-day period, the Engineer shall discontinue all services in connection with the performance of this Agreement and shall proceed to cancel promptly all existing orders and contracts insofar as such orders or contracts are chargeable to this Agreement. As soon as practicable after receipt of notice of termination, the Engineer shall submit a statement, showing in detail the services performed under this Agreement to the date of termination. The Owner shall then pay the Engineer that portion of the prescribed charges which the services called for under this Agreement, less such payments on account of the charges as have been previously made. Copies of all completed or partially completed designs, plans and specifications prepared under this Agreement shall be delivered to the Owner when and if this Agreement is terminated.

11. EQUAL EMPLOYMENT OPPORTUNITY COMPLIANCE. The Engineer will not discriminate against any employee or applicant for employment because of race, color, religion, sex, sexual orientation, gender identity, age, or national origin, including qualified disabled veterans and qualified handicapped individuals. Such action shall include, but not be limited to, employment, upgrading, demotion, or transfer; recruitment, or recruitment advertising; layoff or termination; rates of pay, or other forms of compensation; and selection for training, including apprenticeship. The Engineer agrees to post in conspicuous places, available to employees and applicants for employment, notices to be provided setting forth the

provisions of this non-discrimination clause.

The Engineer shall keep such records and submit reports concerning the racial and ethnic origin of applicants for employment and employees as the Secretary of Labor and the Department of Housing and Urban Development may require. The Engineer agrees to comply with such rules, regulations, or guidelines as the Secretary of Labor and the Department of Housing and Urban Development may issue to implement these requirements.

12. CONFLICT OF INTEREST CLAUSES. Engineer represents that it presently has no interest, either direct or indirect, which would conflict in any manner with the performance of services required hereunder, and further agrees to the following clauses:

A. INTEREST OF MEMBERS OF COUNTY AND OTHERS. No officer, member, or employee of the County, and no public official of the governing body of the locality or localities in which the Project is situated or being carried out, who exercises any functions or responsibilities in the review or approval of the undertaking or carrying out of this Project, shall participate in any decision relating to this Contract which affects his personal or pecuniary interest, direct or indirect, in this Contract or the proceeds thereof.

B. INTEREST OF THE CONTRACTOR. The Engineer covenants that he presently has no interest and shall not acquire any interest directly or indirectly which would conflict in any manner or degree with the performance of services required to be performed under this Contract. The Engineer covenants that in performance of this Contract no person having any such interest shall be employed.

C. OFFICIAL NOT TO BENEFIT. No member of or delegate to the Congress of the United States of America shall be admitted to any share or part hereof or to any benefit to arise here from.

13. NOTICES, COMMUNICATIONS, AND ELECTRONIC TRANSMITTALS. Unless otherwise stated by the Owner, the Engineer may transmit, and shall accept Project-related correspondence in electronic media or digital format. Where required, original contract documents, drawings, and graphics, including but not limited to Shop drawings shall be provided in hard and digital format. Print media and communications under this Contract to be mailed or delivered to Owner shall be to the following address:

TARRANT COUNTY
COMMUNITY DEVELOPMENT DEPARTMENT
2501 Parkview Drive, Suite 420
Fort Worth, TX 76102

14. SUCCESSORS AND ASSIGNMENTS. The Owner and the Engineer each bind himself and his successors, executors, administrators, and assigns to the other part of this Agreement and to the successors, executors, administrators and assigns of such other party, in respect to all covenants of this Agreement, except as above, neither the Owner nor the Engineer shall assign, sublet or transfer his interest in this Agreement without the written consent of the other. Nothing herein shall be construed as creating any personal liability on the part of any officer or agent of any public body which may be a party thereto.

This contract shall not be interpreted to inure to the benefit of a third party who is not a party to this contract. This contract may not be interpreted to waive any statutory or common law defense, immunity, including governmental and sovereign immunity, or any limitation of liability, responsibility, or damage of any party to this contract, party's agent, or party's employee, otherwise provided by law.

15. GOVERNING LAW AND VENUE. This Agreement shall be interpreted under the laws of the State of Texas. The venue for any lawsuit arising out of this Agreement will be the Fort Worth Division of the Northern District of Texas if the lawsuit arises in Federal Court or Tarrant County, Texas if the matter arises in state court.

16. ANNUAL FISCAL CONDITION PRECEDENT. The parties acknowledge and agree that the Tarrant County, Texas is a governmental entity subject to an annual budgetary process and restrictions on spending in conformity with that process and its approved budget. The parties further agree that, notwithstanding any other language or provision herein to the contrary, if for any reason funds are not budgeted expressly for this agreement for the County's fiscal years subsequent to that in which funds for this Agreement are first allocated, the County may immediately and without penalty terminate this Agreement; provided, however, that in no event shall such a termination be effective earlier than the expiration of the last date for which funds have already been so allocated under an existing, finally approved budget.

17. FORM 1295 COMPLIANCE. Engineer acknowledges and agrees that in accordance with Section 2252.908 (b) – (c) of the Texas Government Code, it has fully, accurately, and completely disclosed all interested parties on the Texas Ethics Commission's Form 1295 attached as "Attachment A".

18. BOYCOTT AND ANTI-TERRORISM STATUTES. Engineer verifies the acceptance and acknowledgement of the anti-boycott statutes as applicable by law and required by Chapters 2271, 2252, and 2274 Texas Government Code Verification as follows:

(a) Boycott of Israel Prohibited. In compliance with Section 2271.001 et seq. of the Texas Government Code, Contractor verifies that neither it nor any of its affiliates currently boycott Israel and neither it nor any of its affiliates will boycott Israel during the term of this Agreement. "Boycott Israel" is defined in Section 808.001(1) of the Texas Government Code.

(b) Scrutinized Business Operations Prohibited. In compliance with Section 2252.151 et seq. of the Texas Government Code, Contractor warrants and represents that: (1) neither Contractor nor any of its affiliates engages in scrutinized business operations in Sudan; (2) neither Contractor nor any of its affiliates engages in scrutinized business operations in Iran; and (3) neither Contractor nor any of its affiliates engages in scrutinized business operations with designated foreign terrorist organizations. "Scrutinized business operations in Sudan" is defined in Section 2270.0052 of the Texas Government Code. "Scrutinized business operations in Iran" is defined in Section 2270.0102 of the Texas Government Code. "Scrutinized business operations with designated foreign terrorist organizations" is defined in Section 2270.0152 of the Texas Government Code. Contractor further represents and warrants that neither Contractor nor any of its affiliates appears on any of the Texas Comptroller's Scrutinized Companies Lists.

(c) Boycott of Certain Energy Companies Prohibited. In compliance with Section 2274.002 of the Texas Government Code (added by 87th Legislature, S.B. 13), Contractor verifies that neither it nor any of its affiliates currently boycott energy companies and neither it nor any of its affiliates will boycott energy companies during the term of this Agreement. "Boycott energy company" is defined in Section 809.001(1) (added by 87th Legislature, S.B. 13) and means, without an ordinary business purpose, refusing to deal with, terminating business activities with, or otherwise taking any action that is intended to penalize, inflict economic harm on, or limit commercial relations with a company because the company: (A) engages in the exploration, production, utilization, transportation, sale, or manufacturing of fossil fuel-based energy and does not commit or pledge to meet environmental standards beyond applicable federal and state law; or (B) does business with a company described by subsection (A).

(d) Discrimination against Firearm Entities or Firearm Trade Associations Prohibited. In compliance with Section 2274.002 of the Texas Government Code (added by 87th Legislature, S.B. 19), Contractor verifies that neither it nor any of its affiliates have a practice, policy, guidance, or directive that discriminates against a firearm entity or firearm trade association; and neither it nor any of its affiliates will discriminate during the term of the Agreement against a firearm entity or firearm trade association. "Discriminate against a firearm entity or firearm trade association" is defined in Section 2274.001(3) (added by 87th Legislature, S.B. 19) and means, with respect to the entity or association, to: (i) refuse to engage in the trade of any goods or services with the entity or association based solely on its status as a firearm entity or firearm trade association; (ii) refrain from continuing an existing business relationship with the entity or association based solely on its status as a firearm entity or firearm trade association; or (iii) terminate an existing business relationship with the entity or association based solely on its status as a firearm entity or firearm trade association; the term does not include: (i) the established policies of a merchant, retail seller, or platform that restrict or prohibit the listing or selling of ammunition, firearms, or firearm accessories; and (ii) a company's refusal to engage in the trade of any goods or services, decision to refrain from continuing an existing business relationship, or decision to terminate an existing business relationship: (aa) to comply with federal, state, or local law, policy, or regulations or a directive by a regulatory agency; or (bb) for any traditional business reason that is specific to the customer or potential customer and not based solely on an entity's or association's status as a firearm entity or firearm trade association.

19. SECTION CAPTIONS. Each Section Heading under this contract has been supplied with a caption to serve only as a guide to the contents. The caption does not control the meaning of any section nor in any way determine its interpretation or application.

20. PRIOR AGREEMENTS SUPERSEDED. This contract constitutes the sole and only agreement of the parties hereto and supersedes any prior understandings or written or oral agreements between the parties respecting the written subject matter.

21. COMPLIANCE WITH LAWS. In providing the services required by this Agreement, Engineer must observe and comply with all applicable federal, state, and local statutes, ordinances, rules, and regulations, including, without limitation, workers' compensation laws, minimum and maximum salary and wage statutes and regulations, and non-discrimination laws

and regulations. Engineer shall be responsible for ensuring its compliance with any laws and regulations applicable to its business, including maintaining any necessary licenses and permits.

Both OWNER and CONTRACTOR agree to abide by all state and federal laws, statutes, and regulations applicable to the completion of the project described.

Execution of Agreement. This agreement may be executed in one or more counterparts, each of which will be deemed to be an original copy of this agreement, and all of which, when taken together, shall be deemed to constitute one and the same agreement. The exchange of copies of this agreement and of signature pages by electronic transmission shall constitute effective execution and delivery of this agreement as to the parties and may be used in lieu of the original agreement for all purposes. Signatures of the parties transmitted or executed electronically shall be deemed to be their original signatures for any purpose whatsoever.

SIGNED AND EXECUTED THIS _____ DAY OF _____, 2025.

COUNTY OF TARRANT
STATE OF TEXAS

BY: Separate Electronic Signature Page
Tim O'Hare
County Judge

MJ Thomas Engineering

(SIGNATURE)

Michael A. Thomas, P.E. - Principal
NAME AND TITLE

WITNESS: _____

NAME: _____

TITLE: _____

CERTIFICATE OF INTERESTED PARTIES

FORM 1295

Complete Nos. 1 - 4 and 6 if there are interested parties.
Complete Nos. 1, 2, 3, 5, and 6 if there are no interested parties.

OFFICE USE ONLY
CERTIFICATION OF FILING

Certificate Number:
2025-1370279 10/10/2025

Date Filed:
09/30/2025

Date Acknowledged:
10/10/2025

1 Name of business entity filing form, and the city, state and country of the business entity's place of business.

MJ Thomas Engineering, LLC.
Fort Worth, TX United States

2 Name of governmental entity or state agency that is a party to the contract for which the form is being filed.

Tarrant County Community Development

3 Provide the identification number used by the governmental entity or state agency to track or identify the contract, and provide a description of the services, goods, or other property to be provided under the contract.

B-25-UC-48-0001-54-50
Sewer improvements along 5000-5100 blocks of Thurston Road

4 Name of Interested Party	City, State, Country (place of business)	Nature of interest (check applicable)	
		Controlling	Intermediary
MJ Thomas Engineering, LLC.	Fort Worth, TX United States	X	

5 Check only if there is NO Interested Party. ☐

6 UNSWORN DECLARATION

My name is Michael A. Thomas, and my date of birth is 10/05/1972.

My address is 4700 Bryant Irvin Court, Fort Worth (city), TX (state), 76107 (zip code), US (country).

I declare under penalty of perjury that the foregoing is true and correct.

Executed in Tarrant County, State of Texas, on the 30th day of September (month), 20 25 (year).

Signature of authorized agent of contracting business entity
(Declarant)

U.S. DEPARTMENT OF HOUSING AND URBAN DEVELOPMENT
WASHINGTON, DC 20410-7000

OFFICE OF COMMUNITY PLANNING
AND DEVELOPMENT

Special Attention of:
All CPD Division Directors
HUD Field Offices
HUD Regional Offices
All CDBG Grantees
All HOME Participating Jurisdictions
All HTF Grantees
All ESG-Grantees
All HOPWA (Formula)-Grantees

NOTICE: **CPD-25-02**

Issued: **January 14, 2025**
Expires: **August 18, 2025**
Cross Reference: 24 CFR Part 91

Subject: Guidance on Submitting Consolidated Plans and Annual Action Plans for Fiscal Year (FY) 2025

Purpose:

The purpose of this Notice is to instruct all Community Development Block Grant (CDBG), HOME Investment Partnerships (HOME), Housing Trust Fund (HTF), Emergency Solutions Grants (ESG) and Housing Opportunities for Persons With AIDS (HOPWA) formula grantees on the timing of submission of FY 2025 Consolidated Plans and Action Plans. Grantees and HOME participating jurisdictions (PJs) should not submit their Plans until the actual grant amounts have been determined and announced by HUD. In addition, this Notice provides:

1. Instructions to grantees/PJs under each of the above programs regarding the application of a waiver and CPD program flexibility to meet the consolidated planning citizen participation requirements for the submission of FY 2025 Consolidated Plans and Action Plans;

2. Instructions to grantees/PJs under each of these programs regarding costs incurred prior to execution of a grant agreement; and

3. Information for Entitlement CDBG grantees and HOME PJs about waivers being made available to certain grantees/PJs to assist in the implementation of the pre-award costs instructions.

These provisions apply equally to grantees' three- to five-year Consolidated Plans as well as to annual Action Plans (either as a stand-alone document or as a component of the overall Consolidated Plan submission).

Notes regarding applicability:

This Notice uses the term "grantee" generically, to also include HOME PJs, except where the term appears in discussions explicitly limited to one of the other covered funding programs. The provisions of this Notice covering the Entitlement CDBG program also apply to Insular Area

grantees and CDBG non-entitlement county grantees in Hawaii, as the Entitlement CDBG program regulations also apply to their CDBG funds.

What's New for FY 2025:

Grantees are now required to submit a HUD 424B in addition to submission of a SF-424 and the required certifications in 24 CFR part 91. See page 5 of this Notice for additional information.

Background:

According to 24 CFR 91.15(a)(1), each grantee should submit its Consolidated Plan to HUD at least 45 days before the start of its program year. In addition, 24 CFR 91.15(a)(2) prohibits HUD from accepting a Consolidated Plan or Action Plan submission for FY 2025 funding earlier than November 15, 2024 or later than August 16, 2025. Even after a fiscal year's appropriation is enacted, HUD needs time to compute grantees' allocation amounts for the programs covered by the Consolidated Plan, and grantees may need time to adjust their proposed activities and budgets to account for the allocation amounts announced by HUD.

According to 24 CFR 91.500(a), a Plan will be deemed approved 45 days after HUD receives the Plan, unless HUD notifies the jurisdiction before that date that the Plan is disapproved. In past years, HUD typically did not disapprove a Plan solely because it was based on estimated allocation amounts. As a result, a Plan submitted by a grantee before its allocation amounts were announced typically received automatic approval, even though the Plan did not list the grantee's actual allocation amounts.

This practice resulted in significant additional work for both HUD and grantees. After the actual allocation amounts were announced, a grantee had to sign and submit a revised, SF-424 form to reflect the actual allocation amounts for each of its grants. In many cases, the grantee also had to make additional changes to its Plan to account for its actual allocation amounts, which may have triggered a substantial amendment under 24 CFR 91.505, depending on the grantee's citizen participation plan process. For FY 2025, HUD will not execute a grant agreement with a grantee until HUD has received a Plan (or an amended Plan) which incorporates the actual allocation amounts a grantee is to receive for FY 2025. Any Plan submitted without the actual allocation amount(s) or before the date of the allocation announcement will be disapproved by HUD and returned to the grantee.

Procedures for Submission of FY 2025 Consolidated Plans and Action Plans by Grantees with Early Program Year Start Dates:

HUD is issuing the following procedures to govern the submission and review of Consolidated Plans and Action Plans for FY 2025 funding prior to computation of FY 2025 allocation amounts. These procedures will apply to any grantee whose normal Consolidated Plan/Action Plan submission deadline (45 days before the start of the program year) falls either before, or less than 60 days after, the date HUD announces FY 2025 allocation amounts for CDBG, ESG, HOME and HOPWA funding. (See Section II. for a discussion of the timing of HTF allocations.) To date, Congress has not passed HUD's FY 2025 appropriation, and the date this appropriation will be made is unknown.

Note: These procedures will not apply to grantees whose normal Consolidated Plan/Action Plan submission deadline is more than 60 days after the HUD announcement of FY 2025 allocation amounts; those grantees should have sufficient time to revise their Plans to match actual allocation amounts prior to the due date for their Plan.

I. Submission Dates for FY 2025 Consolidated Plans/Action Plans for CDBG, ESG, HOME, HOPWA

Grantees are advised not to submit their Consolidated Plan/Action Plan until after the FY 2025 allocations have been announced. Grantees due to submit a new three- to five-year Consolidated Plan in FY 2025 should refrain from submitting the overall Consolidated Plan as well as the FY 2025 Action Plan contained within the overall document. HUD cannot complete its review of the overall Consolidated Plan components independent of the current year's Action Plan component. Once HUD informs grantees of their FY 2025 funding allocation amounts, each grantee should, prior to submission, ensure that the actual FY 2025 allocation amounts are reflected in the form SF-424, in the description of resources and objectives, and in the description of activities to be undertaken (or, for states, the method of distribution). It may be necessary for a grantee to revise its Action Plan before submission to HUD.

A grantee whose normal Consolidated Plan/Action Plan submission deadline is less than 60 days from the date that HUD announces FY 2025 allocation amounts may delay submission of its Consolidated Plan or Action Plan to HUD until 60 days after the date allocations are announced. This delay will give the grantee time to revise its Action Plan to incorporate actual allocation amounts, and to conduct any additional citizen participation, if necessary.

The table below gives examples—based on HUD announcing grant allocation amounts on April 25, 2025[1]—of grantee due dates for submitting Consolidated Plans and Action Plans and postponing plan due dates.

Your PY Start Date	If HUD announced FY2025 grant allocations on April 25, 2025…
January 1–June 1, 2025	Your Consolidated Plan/Action Plan due date **passed before HUD announced grant allocations**. Therefore, you can postpone submitting your plan(s) until June 24, 2025.
July 1–August 1, 2025	Your Consolidated Plan/Action Plan due date is **less than 60 days after HUD announced grant allocations**. Therefore, you can also postpone submitting your plan(s) until June 24, 2025.
September 1–October 1, 2025	Your Consolidated Plan/Action Plan due date is **more than 60 days after HUD announced grant allocations**. Therefore, you are expected to submit your plan(s) by your normal due date, following the regulatory requirements in 24 CFR 91.15(a)(1). NOTE: HUD has determined it's not necessary to waive 24 CFR 91.15(a)(1) to implement the procedures in this Notice for FY 2025 Action Plans. This provision does not prohibit a grantee

[1] This date is a fictional example as HUD does not know when it will announce FY 2025 grant allocation amounts. Congress must first pass a HUD appropriations bill and then HUD must calculate grantee allocation amounts.

	from submitting a Plan in the eCon Planning Suite after that time. It is not necessary for an affected grantee to request an exception to its normal Action Plan submission date under 24 CFR 91.15(a)(1), nor is it necessary for a field office to grant an exception to the Action Plan submission deadlines under 24 CFR 91.20 to implement the procedures in this Notice.

Under no circumstances, however, may a Consolidated Plan/Action Plan be submitted to HUD later than August 16, 2025. Failure to submit an Action Plan for FY 2025 by August 16, 2025, will result in the automatic loss of FY 2025 CDBG funds to the grantee. This requirement is established by statute, and HUD cannot waive the August 16 submission deadline. Funding under other CPD formula programs is not subject to this deadline but, since virtually all CPD formula grantees receive CDBG funding, the CDBG submission requirement effectively establishes the deadline for submission of Action Plans.

II. Submission Process for the Housing Trust Fund (HTF) Program

HTF is an affordable housing production program to increase and preserve the supply of decent, safe, and sanitary affordable housing for extremely low-income and very low-income families. (See 24 CFR Part 93). HTF is a formula grant program for States, as defined in 24 CFR 93.2.

The HTF regulation at 24 CFR 93.100 requires each State to include its HTF allocation plan in its Consolidated Plan or annual Action Plan, in accordance with 24 CFR Part 91. The regulation at 24 CFR 91.320(k)(5) provides the requirements for the HTF allocation plan, including the requirement that the plan describe the method for the distribution of the HTF funds and establish the application requirements and criteria for selecting applications.

The timing of the HTF allocations is different from other CPD formula programs (CDBG, HOME, HOPWA, and ESG) because the source of funding is through mandatory set-aside amounts from the Federal National Mortgage Association ("Fannie Mae") and Federal Home Loan Mortgage Corporation ("Freddie Mac") rather than Federal appropriations. The earliest HUD expects to publish the HTF allocations is April 2025. If HTF allocations are not published before a State submits its Consolidated Plan/Action Plan, a State may submit its Consolidated Plan/Action Plan for the other CPD formula programs, then submit its HTF allocation plan as a substantial amendment to its annual Action Plan after the HTF allocations are published.

Further, pursuant to 24 CFR 91.220(l)(5), a unit of general local government selected by the grantee to administer all or a portion of its HTF program as a subgrantee must include a HTF allocation plan in its annual Action Plan that is consistent with the grantee's HTF allocation plan. The subgrantee's HTF allocation plan must describe the distribution of the HTF funds and establish the application requirements and criteria for the selection of applications submitted by eligible recipients that meet the local jurisdiction's priority housing needs. Due to the timing of the publication of HTF allocations and the selection process of HTF grantees, the subgrantee may submit its Consolidated Plan/Action Plan for the other CPD formula programs, then submit its HTF allocation plan as a substantial amendment to its annual Action Plan after the HTF allocations are published and the grantee has selected the subgrantee pursuant to their HTF allocation plan.

III. HUD Review of Consolidated Plans/Action Plans

HUD reviews Consolidated Plans/Action Plans based on 24 CFR 91.500(b). HUD's 45-day review period begins when grantees submit their plan(s) in the eCon Planning Suite OR when the grantee's CPD field office receives their original executed SF-424 (whichever is later).

Beginning in FY 2025, grantees must submit a new set of (3) forms and certifications with their Consolidated Plans and Action Plans:

1. SF-424
2. HUD-424B, Applicant and Recipient Assurances and Certifications[2]
3. Certifications required by 24 CFR 91.225, 91.325, and 91.425

NOTE: Submission of the SF-424D is no longer required.

HUD will disapprove as substantially incomplete any Consolidated Plan or Action Plan covering FY 2025 funding that does not reflect actual CDBG, HOME, ESG and HOPWA allocation amounts on the form SF-424, in the description of resources and objectives, and in the description of activities to be undertaken (or, for states, the method of distribution). A grantee whose Action Plan is disapproved for this reason is advised to resubmit a revised Plan after HUD has announced the actual FY 2025 allocation amounts, and after the grantee has incorporated the actual allocation amounts into its Plan. The HTF allocation must be included if the HTF allocations are published before the grantee submits its Consolidated Plan or Action Plan. (See Section II.).

24 CFR 91.500(b) states that HUD may disapprove a Plan or a portion of a Plan if it is inconsistent with the purpose of the Cranston-Gonzalez National Affordable Housing Act (42 U.S.C. 12703), if it is substantially incomplete, or, in the case of a CDBG certification under §91.225(a) and (b) or §91.325(a) and (b), if it is not satisfactory to the Secretary in accordance with §570.304, §570.429(g), or §570.485(c). The following are examples provided in §91.500(b) of substantially incomplete Plans:

1. A Plan developed without the required citizen participation or the required consultation;
2. A Plan that fails to satisfy all the required elements in 24 CFR Part 91, as reflected in the eCon Planning Suite. This includes when the grantee has not provided a final statement of community development objectives and the projected use of funds;
3. A Plan for which a certification is rejected by HUD as inaccurate, after HUD has inspected the evidence and provided due notice and opportunity for comment; and
4. A Plan without a description of the manner in which the unit of general local government or state will provide financial or other assistance to a public housing agency if the public housing agency is designated by HUD as "troubled."

24 CFR 91.500(d) states that "(t)he jurisdiction may revise or resubmit a Plan within 45 days after the first notification of disapproval." HUD has determined that it is not necessary to

[2] Some certifications in the HUD-424B are also contained in the regulations at 24 CFR 91.225, 91.325, and 91.425. Both the HUD-424B and the certifications required in the above-cited regulations must be submitted in their entirety. Submitting both sets of certifications will assure grantees that they have met the Con Plan and Action Plan submission requirements.

waive this provision to implement the procedures in this Notice for FY 2025 Consolidated Plans/Action Plans. This provision does not prohibit a grantee whose application was disapproved from re-submitting a Plan after that time period.

24 CFR 91.105(c), 91.115(c) and 91.505 require a grantee to comply with citizen participation requirements when it undertakes a substantial amendment to an approved Plan. A Plan that has been disapproved by HUD is, by definition, not an approved Plan. When a grantee's Plan is disapproved by HUD, the Consolidated Plan regulations do not require a grantee to undertake further citizen participation on the changes the grantee makes before re-submitting the Plan. A major exception to this, however, would be if the reason for disapproval involved the grantee's failure to fulfill citizen participation requirements. 24 CFR 91.500(b) identifies a plan that was developed without the required citizen participation or the required consultation as an example of a consolidated plan that is considered substantially incomplete. However, as noted in this Notice, there are circumstances in which a grantee may need to make major revisions to a disapproved Plan, which could trigger further citizen participation efforts. A grantee with a disapproved Plan should review its citizen participation plan and local policies to determine whether it will need to conduct further citizen participation as a result of the changes it makes to incorporate actual allocation amounts into its Plan, prior to re-submission of the revised Plan.

IV. Development of Proposed Action Plans and Citizen Participation During the Interim

Before submitting an action plan to HUD, grantees must satisfy the applicable requirements for consultation and citizen participation described in 24 CFR part 91.[3] A grantee has several options regarding fulfilling its citizen participation obligations while waiting for HUD to announce FY 2025 allocation amounts:

a. A grantee may conduct citizen participation on its draft Plan (with estimated funding amounts) according to its normal timetable and citizen participation procedures.

HUD cautions grantees that the expedited citizen participation procedures detailed in Federal Register Notice FR-6218-N-01, *Program Rules, Waivers, and Alternative Requirements Under the CARES Act for Community Development Block Grant Program Coronavirus Response Grants, Fiscal Year 2019 and 2020 Community Development Block Grants, and for Other Formula Programs,* and elsewhere are no longer available. Citizens must be given 30 days to comment on the FY 2025 Consolidated Plans, Action Plans and substantial amendments to those Plans.

A grantee pursuing this option should make clear that the funding levels shown in the draft Plan are estimated amounts. In addition, the grantee should include "contingency provision" language in its Action Plan which explains how it will adjust its proposed Plan to match its actual allocation amounts once actual amounts become known. By including such contingency language, a grantee can avoid the need to make significant revisions to its Plan (beyond incorporating the final allocation amounts into the Plan and the SF-424 form). The grantee may also avoid the potential need to conduct additional citizen participation on a Plan that has to be significantly revised to reflect actual allocation amounts.

[3] For example, the consultation requirements outlined at 24 CFR 91.100 require local governments to consult with various entities, including organizations that represent protected class members and those that enforce fair housing laws and public housing authorities.

Examples of contingency provisions include:

- A Plan could state that all proposed activities' budgets will be proportionally increased or decreased from the estimated funding levels to match actual allocation amounts.
- A grantee could express its budget in terms of percentages of the allocation to be budgeted to each planned activity, along with the grantee's current estimate of how many dollars that equates to for each activity. [For example, regardless of what the final allocation amounts are, the United Interfaith Street Outreach Program will receive 22 percent (currently estimated to be approximately $38,000) of the grantee's total ESG allocation, and the Tenant-Based Rental Assistance activity will receive 10 percent (currently estimated to be about $68,750) of the HOME allocation.]
- A Plan could state that any increase or decrease in funding to match actual allocation amounts will be applied to one or more specific activities (e.g., any increase or decrease relative to the grantee's estimated allocation amount will be applied to the single-family housing rehabilitation grant program).
- A Plan could list its proposed activities in priority order and indicate that the East Side Sidewalk Replacement activity listed in the plan is a "backup" activity that will be funded only if sufficient CDBG funding exists; or conversely, if the grantee's actual allocation is less than estimated, the East Side Sidewalk Replacement activity will not be funded in FY 2025.
- A Plan could state that, should the actual allocation amount exceed the grantee's estimate, the grantee will increase the Uptown Sewer Separation activity budget and will extend the service area block-by-block along the 600-900 blocks of Cherry Street, based on the amount of additional funding available.

A grantee may include these or other comparable provisions singly or in any combination to meet its needs. A grantee may adopt a different contingency approach for each of the programs covered by this Notice (CDBG, ESG, HOME, HOPWA and HTF).

b. Alternatively, a grantee may prepare a proposed Action Plan according to its normal timetable but wait until actual allocation amounts are known before undertaking citizen participation actions. Once allocation amounts are announced by HUD, the grantee will need to update relevant sections of its Plan (such as the listings of resources and objectives, and the description of activities or the state's method of distribution) to reflect actual allocation amounts before conducting citizen participation. All grantees intending to incur pre-award costs under the programs covered by this Notice should be aware that this option will not be available to them, as citizen participation requirements must be met before pre-award costs are incurred. (See Section V. below.)

HUD has developed these procedures to minimize disruption to grantees and to minimize duplication of effort by grantees. A grantee that does not follow either option a. or b. above (i.e., the grantee undertakes citizen participation according to its normal timetable, based solely on estimated funding levels, and the Plan does not contain any contingency language on how the final Plan will be adjusted to match actual allocation amounts) runs the risk of increasing its own work obligations and costs. The grantee will still be required to update its Plan to incorporate actual allocation amounts before submission to HUD. Depending on the requirements contained within the grantee's citizen participation plan, the grantee may need to undertake additional publication and citizen

participation processes based on the difference between its actual allocation amounts and the estimated amounts in its proposed Action Plan, and based on how the grantee plans to adjust its proposed activities to match its actual allocation amounts. Local policies and procedures may also require the grantee to obtain re-approval of the revised Plan from its legislative body or authorizing officials.

A draft Plan that has not yet been submitted to HUD is not an approved Plan. A draft Plan must be revised in accordance with the grantee's citizen participation requirements, which may not be the same as a grantee's citizen participation requirements for a substantial amendment to an approved Plan. A grantee that delays its Plan submission should review its citizen participation plan and local policies to determine whether it will need to conduct further citizen participation as a result of the changes it makes to incorporate actual allocation amounts into its Plan, prior to its submission.

States and Entitlement communities that also administer CDBG disaster recovery (CDBG-DR) and CDBG mitigation (CDBG-MIT) grants are advised to consult the applicable Federal Register notices that require the incorporation of these grants into Consolidated Plans within a specified period following the award of these grants. Grantees should consult guidance on this process here: https://www.hud.gov/program_offices/comm_planning/cdbg-dr/news/consolidated-plan-updates-2022-02.

V. Pre-Award Costs

A. General Provisions Applicable to All Consolidated Plan Programs

Special attention must be paid to situations in which a grantee wishes to incur costs prior to grant award. For example, under certain programs, a grantee may want to execute annual renewals of agreements with social service providers to prevent interruption of social services. The annual performance cycle of these agreements might normally begin after the grantee's official program year start date but, under this Notice the grantee cannot even submit its Action Plan until after the date that the agreements need to be executed. Thus, the timing instructions in this Notice may cause some program costs to be classified as pre-award costs where they would otherwise not have been.

The government-wide Uniform Administrative Requirements, Cost Principles and Audit Requirements regulation, at 2 CFR Part 200, includes the following provision concerning agency approval of pre-award costs:

§ 200.458. Pre-award costs. Pre-award costs are those incurred before the start date of the Federal award or subaward directly pursuant to the negotiation and in anticipation of the Federal award where such costs are necessary for efficient and timely performance of the scope of work. These costs are allowable only to the extent that they would have been allowed if incurred after the start date of the Federal award and only with the written approval of the Federal agency. If approved, these costs must be charged to the initial budget period of the Federal award unless otherwise specified by the Federal agency or pass-through entity.

This provision applies to the ESG, HOPWA and HTF programs. It does not apply to the CDBG and HOME programs, which have pre-award cost requirements unique to those programs. (The HOME requirements, however, apply only to certain types of pre-award costs, see 24 CFR 92.212.) The following guidance applies to all five programs. Additionally, guidance unique to each separate program is provided below.

The Consolidated Plan regulations in 24 CFR Part 91 make distinctions between "a proposed Plan" and "a Plan." Most notably, 24 CFR 91.105(b) and 91.115(b) describe the citizen participation requirements for a grantee's proposed Plan. For purposes of this Notice regarding pre-award costs, HUD considers a grantee's Plan to have moved from being "a proposed Plan" to being "a Plan" once a grantee has completed the publication, public hearing and public comment requirements at 24 CFR 91.105(b)(2), (3) and (4) or 91.115(b)(2), (3) and (4), and has developed its written summary of comments received pursuant to 24 CFR 91.105(b)(5) or 91.115(b)(5).

To minimize additional workload on grantees and HUD field offices, this Notice establishes the following procedures implementing the 2 CFR 200.458 requirements cited above. This Notice provides conditional HUD approval of pre-award costs, contingent on the availability, requirements, and authorized uses of FY 2025 appropriations, if and when the following actions have been completed and documented by the grantee:

1. The grantee documents that the costs incurred prior to grant award are necessary for efficient and timely performance of the activity in question.

2. The grantee documents that the costs are for eligible activities under the regulations for the applicable funding program;

3. The grantee documents that it has complied with all other requirements for pre-award costs under the regulations for the applicable funding program or as described below;

4. The activity for which costs will be incurred is included in a Consolidated Plan/Action Plan;

5. The grantee documents completion of its citizen participation process by including in its files a written, dated summary of citizen participation comments received on its Plan, pursuant to 24 CFR 91.105(b)(5) or 91.115(b)(5) as applicable;

For CDBG, HOME, ESG, and HOPWA grantees, before committing any funds – including non-Federal funds – for a pre-award cost, the recipient must either make a written determination that the pre-award cost is for an activity that is exempt from environmental review or categorically excluded and not subject to review under related environmental laws and authorities under 24 CFR Part 58 or verify that the applicable environmental review has been completed and a Request for Release of Funds has been approved in accordance with 24 CFR Part 58, if applicable. Environmental regulations at 24 CFR 58.22 prohibit recipients and any other participant in the development process from committing HUD funds to a project until the environmental compliance review process has been successfully completed and until receipt of the Authority to Use Grant Funds, if applicable. In addition, until the environmental compliance review process has been successfully completed and until receipt of the Authority to Use Grant Funds, neither a recipient nor any participant in the development process may commit non-HUD funds on or undertake an activity or project if the activity or project would have an adverse environmental impact or limit the choice of reasonable alternatives.

If the grantee's files contain all other necessary documentation supporting the costs (described below for each program), the date of HUD approval for pre-award costs is the date of

the written summary of citizen participation comments, or the grantee's program year start date, whichever is later.

Note: Pre-award costs are incurred at the grantee's own risk because reimbursement is contingent upon the availability of appropriated funds for FY 2025, satisfaction of the applicable conditions in this Notice, and execution of the grant agreement with HUD. Any commitments or expenditures incurred by the grantee in excess of the funds provided by the grant and authorized under the applicable FY 2025 appropriations law would be the responsibility of the grantee to pay out of non-federal funds.

B. Specific Provisions: Entitlement CDBG Program

The Entitlement CDBG program regulations specify, at 24 CFR 570.200(h), the situations under which a grantee may be reimbursed for costs incurred prior to the effective date of its grant agreement. The provisions of this Notice will affect how grantees comply with the pre-award cost reimbursement requirements.

1. 24 CFR 570.200(h) defines the effective date of a grantee's agreement as the grantee's program year start date or the date that the Consolidated Plan/Action Plan is received by HUD (whichever is later). Under the provisions of this Notice, a grantee's Plan may not be submitted to (and thus received by) HUD until several months after the grantee's program year start date. This may negatively affect grantees' ability to incur pre-award costs.

   Therefore, to assist affected grantees with pre-award costs, HUD has waived 24 CFR 570.200(h) in accordance with the attached memorandum (ATTACHMENT) to allow the effective date of a grantee's FY 2025 grant agreement to be the earlier of the grantee's program year start date or the date that the Consolidated Plan/Action Plan (with actual allocation amounts) is received by HUD. This waiver is applicable to any Entitlement CDBG grantee seeking to incur pre-award costs, whose Action Plan submission is delayed past the normal submission date in accordance with the terms of this Notice. An affected community applying this waiver shall document in writing the conditions giving rise to the need to use this waiver and maintain the documentation for HUD's review. Grantees' authority to make use of this waiver is only in effect until August 16, 2025, as that is the last date that a grantee may submit its FY 2025 Action Plan.

2. 24 CFR 570.200(h)(1)(i) requires that the activity for which the costs will be incurred must be included in a Consolidated Plan/Action Plan prior to the costs being incurred; grantee compliance with steps 4 and 5 under the general pre-award cost provisions stated in paragraph V.A. above will meet that requirement. However, grantees must also comply with §570.200(h)(1)(ii), which further specifies that the Plan must advise citizens of the extent to which the pre-award costs will affect future grants. CDBG grantees intending to incur pre-award costs are cautioned that option b. described in Section IV above is not likely to be a feasible alternative for them. HUD advises any Entitlement CDBG grantee intending to incur pre-award costs to follow the process described in Section IV. a. above; in doing so, the grantee will need to ensure that it has met the citizen participation and notification requirements above.

3. Pursuant to §570.200(h)(1)(iii) and §570.604, the costs and corresponding activities

must comply with the environmental review requirements at 24 CFR Part 58.

C. Specific Provisions: HOME Program

The HOME regulations specify situations under which a grantee may be reimbursed for costs incurred prior to the effective date of its grant agreement. The provisions of this Notice will affect how grantees comply with the pre-award cost reimbursement requirements.

1. 24 CFR 92.212(b) defines the effective date for incurring administrative and planning costs to be charged to the HOME allocation as the beginning of the PJ's consolidated program year or the date that the Consolidated Plan is received by HUD (whichever is later). To account for the delay in Federal appropriations, this Notice allows impacted PJs to postpone the submission of their Action Plans until several months after their program year start dates. This may negatively affect a PJ's ability to incur planning and administrative pre-award costs. Therefore, HUD has waived 24 CFR 92.212(b) to the extent necessary to permit eligible pre-award costs to be incurred as of the beginning of the program year or the date the consolidated plan describing the HOME allocation to which the costs will be charged is received by HUD, whichever is earlier.

2. The attachment to this Notice contains the HUD memorandum authorizing this waiver. This waiver is applicable to any HOME PJ seeking to incur pre-award administrative and planning costs, whose Action Plan submission is delayed past the normal submission date because of the delayed enactment of FY 2025 appropriations for the Department. An affected PJ applying this waiver shall document in writing the conditions giving rise to the need to use this waiver and maintain the documentation for HUD's review. A PJ's authority to make use of this waiver is only in effect until August 16, 2025, as that is the last date that a grantee may submit its FY 2025 Action Plan.

3. Pursuant to 24 CFR 92.212(a) and 24 CFR 92.352, the costs and corresponding activities must comply with HOME requirements, including the environmental review requirements at 24 CFR Part 58.

D. Additional Provisions: ESG Program

An ESG grantee may be reimbursed for costs incurred before the Period of Performance of its FY 2025 grant, subject to the general conditions described in Section V.A., above, plus the following conditions:

1. Other than the date they are incurred, the costs and corresponding activities must comply with the ESG Program regulations at 24 CFR Part 576.

2. The costs and corresponding activities must comply with environmental review requirements. In accordance with these requirements and section 100261(3) of the MAP-21 Act, 24 CFR 576.407(d) does not apply. Recipients assume environmental review responsibilities under 24 CFR Part 58.

E. Additional Provisions: HOPWA Program

A HOPWA formula grantee may be reimbursed for costs incurred before the Period of Performance of its FY 2025 grant, subject to the general conditions described in Section V.A., above, plus the following conditions:

1. Other than the date they are incurred, the costs and corresponding activities must comply with HOPWA program regulations at 24 CFR Part 574.

2. The costs and corresponding activities must comply with environmental review requirements at 24 CFR 574.510 and 24 CFR Part 58.

F. Additional Provisions: HTF Program

HTF grantees may be reimbursed for pre-award costs permitted under 2 CFR 200.458 for planning activities and preparation of the HTF allocation plan. Eligible pre-award costs may include the cost of public hearings, consultations, and publication of public notices, as well as developing program guidelines. Such costs must be necessary for efficient and timely performance of the HTF program. Pre-award costs may not exceed five percent of the minimum statutory allocation amount of $3 million. The costs and corresponding activities must comply with all HTF requirements, including environmental review requirements at 24 CFR 93.301(f).

VI. Applicability of This Notice to Future Years

This Notice applies only to Consolidated Plans/Action Plans submitted for FY 2025 funding. HUD anticipates revising the Consolidated Plan regulations (and other related regulations) to explicitly include, as a basis for disapproval of a Plan, that a Plan does not contain and reflect a grantee's actual allocation amount. For further information on potential rulemaking in this area, see HUD's June 3, 2015, Federal Register Notice (80 FR 31538). That document solicited public comments on possible amendments to the Consolidated Plan regulations and the CDBG Entitlement regulations to effect such a change. See Sections II.B.1., II.B.2 and II.B.7 of the Notice, pages 31544 and 31546. (Please note, however, that the public comment period for that Federal Register Notice has closed.)

For further information:

Grantees with questions concerning this Notice should direct their inquiries to their local HUD Field Office Community Planning and Development Division. Field Offices should direct their questions to the following individuals at the applicable Headquarters program office:

For the Office of Block Grant Assistance, Gloria Coates at gloria.l.coates@hud.gov for the Entitlement CDBG program or Erinn Martin at erinn.m.martin@hud.gov for the State CDBG program;
for the Office of Affordable Housing Programs, Diane Thompson at diane.a.thompson@hud.gov;
for the Office of Special Needs Assistance Programs, Karen Deblasio at karen.m.deblasio@hud.gov; and
for the Office of HIV/AIDS Housing at Jeffrey Kiemen jeffrey.t.kiemen@hud.gov or hopwa@hud.gov

ATTACHMENT

Availability of Waivers of Community Planning and Development Grant Program Requirements to Facilitate the Ability to Incur Pre-Award Costs in FY 2025

U.S. DEPARTMENT OF HOUSING AND URBAN DEVELOPMENT
WASHINGTON, DC 20410-7000

PRINCIPAL DEPUTY ASSISTANT SECRETARY
FOR COMMUNITY PLANNING AND DEVELOPMENT

MEMORANDUM FOR: All Community Planning and Development
Field Office Division Directors

12/10/2024

FROM: Marion McFadden, Principal Deputy Assistant Secretary, D

SUBJECT: Availability of a Waiver of Community Planning and Development Grant Program Requirements to Facilitate the Ability to Incur Pre-Award Costs in FY 2025

PURPOSE:

This memorandum explains the availability of waivers of certain regulatory requirements associated with two Community Planning and Development (CPD) grant programs to facilitate the continuation of eligible activities and ongoing planning and administrative costs due to a delay by HUD in the receipt of annual appropriations for FY 2025. This memorandum covers the following CPD programs:

- Community Development Block Grant (CDBG), and
- HOME Investment Partnerships (HOME)

BACKGROUND:

HUD is issuing procedures to govern the submission and review of action plans for FY 2025 funding prior to the enactment of a FY 2025 appropriation bill. Grantees are advised not to submit a consolidated plan or action plan until the FY 2025 formula allocations have been announced. However, an action plan must be submitted to HUD no later than August 16, 2025.

The delay in the receipt of annual appropriations by HUD and implementation of these procedures for FY 2025 may have negative consequences for CDBG and HOME grantees that intend to incur eligible costs prior to the award of FY 2025 funding. Some activities might otherwise be interrupted, and grantees might not otherwise be able to use CDBG or HOME funds for planning and administrative costs of administering their programs.

NOTIFICATION PROCESS:

This waiver will apply to any Entitlement, Insular or Hawaii non-entitlement CDBG grantee and to any HOME participating jurisdiction whose program year start date for FY 2025 funding occurs during the period starting January 1, 2025, and ending October 1, 2025, or 60 days after HUD announcement of FY 2025 allocation amounts for formula program funding (whichever comes first). This waiver is available for use by any applicable CDBG grantee or HOME participating jurisdiction whose action plan submission is delayed past the normal submission date because of delayed enactment of FY 2025 appropriations for the Department. Any affected grantee taking advantage of this waiver shall document in writing the conditions giving rise to the need to use this waiver and shall maintain such documentation for HUD's review. This waiver authority is only in effect until August 16, 2025.

WAIVER AUTHORITY:

Without this waiver, some activities might be interrupted while implementing these procedures. In addition, grantees might not otherwise be able to use CDBG and HOME funds for ongoing planning and administrative costs of administering their programs. To address communities' needs and to ensure that programs can continue without disturbance, I find that good cause exists pursuant to 24 CFR 5.110 to waive the CPD program regulatory requirements set forth below.

WAIVER AVAILABILITY:

1. Pre-award Costs

Requirement: For CDBG, the effective date of the grant agreement is the program year start date or the date that the consolidated plan is received by HUD, whichever is later. These dates determine when a grantee may incur pre-award costs. For HOME, eligible administrative and planning costs may be incurred as of the beginning of the program year or the date the consolidated plan describing the HOME allocation to which the costs will be charged is received by HUD, whichever is later.

Citations: 24 CFR 570.200(h) (Entitlement CDBG program, the Insular Areas CDBG program, and for grants to non-entitlement counties in Hawaii) and 24 CFR 92.212(b) (HOME participating jurisdictions)

Explanation: The waiver of 24 CFR 570.200(h) will allow a grantee to treat the effective date of the grant agreement as the program year start date or the date that the consolidated plan/action plan (with actual allocation amounts) is received by HUD, whichever is *earlier*. HUD waives 24 CFR 92.212(b) to the extent necessary to permit eligible administrative and planning pre-award costs to be incurred as of the beginning of the program year or the date the consolidated plan describing the HOME allocation to which the costs will be charged is received by HUD, whichever is *earlier*.

Justification: HUD recognizes that some activities may be interrupted, and grantees and participating jurisdictions might not otherwise be able to use CDBG and HOME funds for eligible pre-award costs without this waiver.

Applicability: This waiver is in effect until August 16, 2025, or until superseded by any rule that may become effective before that date and is transmitted with the "Guidance on Submitting Consolidated Plans and Annual Action Plans for Fiscal Year (FY) 2025."

Finally, I want to express my appreciation for your efforts to support the timely and effective use of CPD funds. Thank you.

TARRANT COUNTY
COMMISSIONERS COURT COMMUNICATION

Court Date: December 9, 2025	**Court Order #:**	**Page:** 1 of 15
Department: Community Development	**Prepared By:** Susan Au	**Approved By:** James A. McClinton, Director

SUBJECT:

Consideration of a Community Development Block Grant Subrecipient Agreement between Tarrant County and SafeHaven of Tarrant County for the Provision of Educational Services to Youth

***** CONSENT AGENDA *****

COMMISSIONERS COURT ACTION REQUESTED

It is requested that the Commissioners Court consider a Community Development Block Grant (CDBG) sub-recipient agreement between Tarrant County and SafeHaven of Tarrant County for the provision of educational services to youth.

BACKGROUND

On June 3, 2025, the Commissioners Court, through Court Order #145328, approved the 2025-2029 Consolidated Plan which included the 2025 Action Plan. The Action Plan includes provisions for the Tarrant County CDBG program for PY 2025 (July 1, 2025 through June 30, 2026).

Since 2012, CDBG funding has supported the SafeHaven SafeSchools Program, which provides violence-prevention education to approximately 1,000 students each year. SafeHaven of Tarrant County delivers the program in eligible Title I-A schools within the Tarrant County Urban Consortium service area where at least 50 percent of students come from low-income families. Schools in Fort Worth, Arlington, and Grand Prairie are not eligible to participate.

With approval, SafeHaven of Tarrant County will be reimbursed for eligible expenses up to $42,000.00 from PY 2025 CDBG funding to continue this program. The Agreement will begin upon the latest date of signature by all parties and shall continue for twelve (12) months thereafter.

The Criminal District Attorney's Office has reviewed this agreement as to form.The Criminal District Attorney's Office has reviewed this agreement as to form.

FISCAL IMPACT

Funding in the amount of $42,000 is available through CDBG grant #B25UC480001.

PASSED AND APPROVED on December 9, 2025.

COUNTY OF TARRANT
STATE OF TEXAS

By: Separate Electronic Signature Page
Tim O'Hare
County Judge

APPROVED AS TO FORM:

_____
District Attorney's Office*

*By law, the District Attorney's Office may only approve contracts for its clients. We reviewed this document as to form from our client's legal perspective. Other parties may not rely on this approval. Instead, those parties should seek contract review from independent counsel.

Attachments

Contract_SafeHaven_CDBG2025 - SHTC signature.pdf

STATE OF TEXAS §
COUNTY OF TARRANT §

COMMUNITY DEVELOPMENT BLOCK GRANT SUBRECIPIENT AGREEMENT FOR PUBLIC SERVICES ON A REIMBURSEMENT BASIS

CONTRACT FOR SERVICES

THIS AGREEMENT is made and entered into by and between **Tarrant County, Texas** (herein called "County") and the **SafeHaven of Tarrant County** (herein called "Subrecipient"), by and through its duly authorized officer.

WHEREAS, County is an Urban Entitlement County and has received a grant through the Community Development Block Grant Program (No. **B-25-UC-48-0001**) under the provisions in Title I of the Housing and Community Development Act of 1974, as amended (HCD Act), Public Law 93-383; and

WHEREAS, County has an approved Consolidated Plan which designates services to youth and low income individuals within Tarrant County as a program priority;

WHEREAS, County wishes to engage the Subrecipient, a non-profit service provider with a demonstrated capacity to undertake providing services to youth and assisting County in utilizing such funds through public service activities; and

WHEREAS, the Tarrant County Community Development Department manages the Community Development Block Grant ("CDBG"), and may perform the duties and responsibilities of the County under this Contract.

NOW, THEREFORE, IT IS AGREED AS FOLLOWS:

I. SCOPE OF SERVICES

A. Activities

The Subrecipient will be responsible for administering CDBG Year 2025 Public Services - SafeSchool program in a manner satisfactory to the County. Such program will include the following activities eligible under the Community Development Block Grant program:

Program Delivery

Subrecipient will work with eligible schools to educate approximately **1,000** youth within Tarrant County in violence prevention strategies. The SafeSchools Program (the "Program") will provide evidence-based and evidence-informed curricula over multiple sessions to teach: elementary age students about bullying/peer abuse; middle school students about life skills and healthy communication skills; and high school students about healthy dating. Youth educated through the Program will gain a greater understanding of bullying, peer abuse, healthy communication and healthy dating, including what is abuse and the effects of abuse on victims. The clients served will be in Title 1 schools that have at least 51% of students from low income families who reside within the Tarrant County Urban Consortium service area, which includes the city limits of Azle, Bedford, Benbrook, Blue Mound, Burleson, Crowley, Colleyville, Dalworthington Gardens, Euless, Everman, Forest Hill, Grapevine, Haltom City, Haslet, Hurst, Keller, Kennedale, Lake Worth, Lakeside, Mansfield, North Richland Hills, Pantego, Richland Hills, River Oaks, Saginaw, Sansom

Park, Southlake, Watauga, Westworth Village and White Settlement, as well as unincorporated Tarrant County, Texas. Students in Independent School Districts for the Cities of Fort Worth, Arlington and Grand Prairie are ineligible to use these funds.

B. National Objectives

All activities funded with CDBG funds must meet one of the CDBG Program's National Objectives. Subrecipient certifies that the activities carried out under this Agreement will benefit low-and moderate-income persons and Subrecipient shall maintain full documentation supporting fulfillment of this National Objective in its files. All such documentation shall be furnished to County upon request in order for the County to fulfill its obligations under its federal grant. If this documentation is not maintained and furnished to the County on request, County may exercise all remedies available under this Agreement, including the right to withhold payment or terminate this Agreement as described herein.

C. Levels of Accomplishment – Goals and Performance Indicators

Subrecipient shall provide violence prevention education to approximately **1,000** unduplicated youth in eligible schools located within the Tarrant County Urban consortium area that have at least 51% of students from low income families.

D. Performance Monitoring

County will monitor the performance of Subrecipient against goals and performance standards mutually agreed upon by County and Subrecipient. Substandard performance as determined by County will constitute non-compliance with this Agreement. If action to correct such substandard performance is not taken by Subrecipient within a reasonable period of time after being notified by County, Agreement suspension or termination procedures will be initiated.

Subrecipient will cooperate fully with County in monitoring Subrecipient. In this regard, Subrecipient agrees to keep records sufficient to document its compliance with all applicable laws, regulations and Agreement terms. County, HUD, and the United States Comptroller General, or their representatives, shall have access to any books, documents, records and papers relating to the operations of Subrecipient under this Agreement for the purpose of audit, examination, exception and transcription during normal business hours, as often as County deems necessary. An audit of Subrecipient's operations may be conducted upon demand by the County or an independent public accountant of County's choice, in accordance with 2 CFR §200.501-512. Subrecipient covenants and agrees that, in the event an audit is conducted by County or on behalf of County, and such audit reveals any improper expenditures by the Subrecipient, its officers, agents, servants, employees and/or subcontractors, of the funds granted hereunder, and such questioned costs are disallowed under the procedures of the party by whom or on whose behalf said audit is conducted, then the amount of such disallowed cost shall constitute liquidated damages for the breach of that portion of the Agreement audited. In case of such disallowed cost, Subrecipient agrees to pay County said sum as liquidated damages for Subrecipient's failure to perform the duties, bear the liabilities and fulfill the obligations imposed upon it by this Agreement.

II. TERM OF AGREEMENT

This Agreement shall commence upon the latest date this Agreement is signed by all a parties and shall run for twelve (12) months thereafter.

III. BUDGET

Line Item	Amount	Fund Source
Personnel	$42,000.00	CDBG PY2025
Total Budget	**$42,000.00**	

IV. PAYMENT

County will disburse PY 2025 CDBG funds in an amount not to exceed **$42,000** ("grant funds") to Subrecipient on a reimbursement of expenses basis. County's decision regarding the eligibility and timing of reimbursement is final. Draw-downs for the payment of eligible expenses shall be made against the line item budget specified in Paragraph III herein and in accordance with performance.

All payment requests will be signed by a duly authorized agent of Subrecipient and will be submitted by the tenth (10th) of each month for payment of the previous month's expenditures. County is under no obligation to disburse funds for expenditures more than sixty (60) days beyond the first day of the month for which the report is submitted. Subrecipient is required to report all Program income as defined by 24 CFR 570.500 (a) generated by activities carried out with CDBG funds made available under this Agreement. The use of Program income by Subrecipient shall comply with the requirements set forth at 24 CFR 570.504.

Payment will be processed by County upon submission and approval of documented expenditures from Subrecipient, in a manner satisfactory to County following receipt from Subrecipient of the following monthly Program documents:

(1) Request for Reimbursement with supporting financial documentation (time sheets)
(2) Population Served Report
(3) Client Data Summary

V. GENERAL PROVISIONS

A. General Compliance

Subrecipient agrees to comply with all applicable federal, state and local laws, regulations, and policies governing the funds provided under this Agreement, including but not limited to the following:

- Title VI of Civil Rights Act of 1964 (42 USC 2000d et seq.)
- Title VIII of Civil Rights Act of 1968 (42 USC 3601 et seq.)
- Executive Orders 11063, 11246, as amended by 11375 and as supplemented by Department of Labor regulations (41 CFR, Part 60)
- Age Discrimination Act of 1975 (42 USC 6101 et. seq.)
- Section 3 of the Housing and Urban Development Act of 1968, as amended, 12 USC 1701u
- Section 504 of the Rehabilitation Act of 1973, (29 U.S.C. 708)
- Title IV of the 1987 Housing and Community Development Act, as amended
- OMB Super Circular (2 CFR §200)
- "Grants and Agreements with Institutions of Higher Education, Hospitals, and Other Non-

Profit Organizations," dealing with cash depositories, bonding and insurance, records, standards for financial management systems, monitoring and reporting Program performance, property management standards, and procurement standards as modified by 24 CFR 570.502(b)

- Subpart K of 24 CFR 570

Subrecipient further agrees to utilize funds available under this Agreement to supplement rather than supplant funds otherwise available.

B. Independent Contractor

Nothing contained in this Agreement is intended to, or shall be construed in any manner, as creating or establishing the relationship of employer/employee between the parties. Subrecipient shall at all times operate as an independent contractor and not as an officer, agent, service or employee of County with respect to this Agreement. Subrecipient has exclusive control of the details of the transportation service(s) to be provided and all work performed hereunder.

C. Worker's Compensation

Subrecipient shall provide Workers' Compensation Insurance coverage for all employees involved in the performance of this Agreement.

D. Amendments

County or Subrecipient may amend this Agreement at any time provided that such amendments make specific reference to this Agreement, and are executed in writing, signed by a duly authorized representative of each organization, and approved by County's governing body. Such amendments shall not invalidate this Agreement, nor relieve or release County or Subrecipient from its obligations under this Agreement.

County may, in its discretion, amend this Agreement to conform with federal, state or local governmental guidelines, policies and available funding amounts, or for other reasons. If such amendments results in a change in the funding, the scope of services, or schedule of the activities to be undertaken as part of this Agreement, such modifications will be incorporated only by written amendment signed by both County and Subrecipient.

E. Suspension or Termination

This Agreement may be terminated for any reason by either party to this Agreement upon thirty (30) days written notice to the other party at their address indicated in Section VI., paragraph H. of this Agreement.

VI. PERSONNEL AND PARTICIPANT CONDITIONS

A. Civil Rights

1. Compliance

Subrecipient agrees to comply with Title VI of the Civil Rights Act of 1964 as amended; Title VIII of the Civil Rights Act of 1968 as amended; Section 104(b) and Section 109 of Title I of the Housing and Community Development Act of 1974 as amended; Section 504 of the Rehabilitation Act of 1973; the Americans with Disabilities Act of 1990; the Age Discrimination Act of 1975; Executive Order 110603; and Executive Order 11246 as amended by Executive Orders 11375, 11478, 12107 and 12086.

2. Nondiscrimination

Subrecipient agrees to comply with the non-discrimination in employment and contracting opportunities laws, regulations, and executive orders referenced in 24 CFR 570.607, as revised by Executive Order 13279. The applicable non-discrimination provision in Section 109 of the HCDA is still applicable.

3. Section 504

Subrecipient agrees to comply with all Federal regulations issued pursuant to compliance with Section 504 of the Rehabilitation Act of 1973 (29 U.S.C. 794), which prohibits discrimination against the individuals with disabilities or handicaps in any Federally assisted program. County shall provide Subrecipient with any guidelines necessary for compliance with that portion of the regulations in force during the term of this Agreement.

B. Affirmative Action

Subrecipient will not discriminate against any employee or applicant for employment because of race, color, creed, religion, ancestry, national origin, sex, disability or other handicap, age, marital status, or status with regard to public assistance. Subrecipient will take affirmative action to insure that all employment practices are free from such discrimination. Such employment practices include but are not limited to the following: hiring, upgrading, demotion, transfer, recruitment or recruitment advertising, layoff, termination, rates of pay or other forms of compensation, and selection for training, including apprenticeship. Subrecipient agrees to post in conspicuous places, available to employees and applicants for employment, notices setting forth the provisions of this nondiscrimination clause.

1. Equal Employment Opportunity and Affirmative Action Statement

Subrecipient will, in all solicitations or advertisements for employees placed by or on behalf of Subrecipient, state that it is an Equal Opportunity or Affirmative Action employer.

C. Employment Restrictions

Subrecipient is prohibited from using funds provided herein or personnel employed in the administration of the Program for: political activities; inherently religious activities; lobbying; political patronage; and nepotism activities.

VII. ADMINISTRATIVE REQUIREMENTS

A. Financial Management

1. Accounting Standards

Subrecipient agrees to comply with 24 CFR 84.21-28 and agrees to adhere to the accounting principles and procedures required therein, to utilize adequate internal controls, and to maintain necessary source documentation for all costs incurred.

2. Cost Principles

Subrecipient shall administer its Program in conformance with 2 CFR §200.413, "Direct Costs" and 2 CFR §200.414 "Indirect Costs" based on the new OMB Super Circular.

B. Documentation and Record Keeping

1. Records to be Maintained

Subrecipient shall maintain all records as specified by the federal regulations in 24 CFR Part 570.506, and that are pertinent to the activities to be funded under this Agreement. Such records shall include but not be limited to:

a. Records providing a full description of each activity undertaken;
b. Records required to determine the eligibility of activities;
c. Records documenting compliance with the fair housing and equal opportunity components of the CDBG program;
d. Financial records as required by 24 CFR Part 570.502 and 24 CFR 84.21-28; and
e. Other records necessary to document compliance with Subpart K of 24 CFR 570.

2. Retention

Subrecipient shall retain all financial records, supporting documents, statistical records, and all other records pertinent to the Agreement for a period of five (5) years. The retention period begins on the date of the submission of County's annual performance and evaluation report to HUD in which the activities assisted under the Agreement are reported on for the final time. Notwithstanding the above, if there is litigation, claims, audits, negotiations or other actions that involve any of the records cited and that have started before the expiration of the five-year period, then such records must be retained until completion of the actions and resolution of all issues, or the expiration of the four-year period, whichever occurs later.

3. Client Data

Subrecipient understands that client information collected by Subrecipient in performing services under this Agreement is private and the use of disclosure of such information, when not directly connected with the administration of County's or Subrecipient's responsibilities with respect to services provided. Such information shall be made available to County monitors or other designees for review upon request.

4. Close-Outs

Subrecipient's obligations shall continue beyond the term of this Agreement until all close-out requirements are completed. Activities during this close-out period shall include, but are not limited to: making final payments, providing final report of persons served for the year, disposing of Program assets (including the return of all unused materials, equipments, unspent cash advances, Program income balances, and receivable accounts to County) and determining the custodianship of records.

5. Audits and Inspections

All Subrecipient records with respect to any matters covered by this Agreement shall be made available to County, grantor agency, and the Comptroller General of the United States or any of their authorized representatives, at any time during normal business hours, as often as deemed necessary, to audit, examine, and make excerpts or transcripts of all relevant data. Any deficiencies noted in audit reports must be fully cleared by Subrecipient within 30 days after receipt by Subrecipient. Failure of Subrecipient to comply with the above audit requirements will constitute a violation of this Agreement and may result in the withholding of future payments. Subrecipient hereby agrees to have an annual agency audit conducted in accordance with current County policy concerning subrecipient audits and 2 CFR §200.501-512.

C. Reporting and Payment Procedures

1. Program Income

If applicable, Subrecipient shall report all Program Income (as defined at 24 CFR 570.090(a)) generated by activities carried out with CDBG funds made available under this Agreement. The use of Program Income by Subrecipient shall comply with the requirements set forth at 24 CFR 570.504. By way of further limitations, Subrecipient may use such income during the contract period for activities permitted under this Agreement and shall reduce requests for additional funds by the amount of any such Program Income balance on hand. All unexpended Program Income shall be returned to County upon the termination of this Agreement. Any interest earned on cash advances from the U.S. Treasury and from funds held in a revolving fund account is not Program income and shall be remitted promptly to County.

2. Indirect Costs

If indirect costs are charged, Subrecipient will develop an indirect cost allocation plan for determining the appropriate Subrecipient's share of administrative costs and shall submit such plan to County for approval, in a form specified by County.

3. Payment Procedures

County will pay to Subrecipient funds available under this Agreement based upon information submitted by Subrecipient and consistent with any approved budget and County policy concerning payments. With the exception of certain advances, payments will be made for eligible expenses actually incurred by Subrecipient, and not to exceed actual cash requirements. Payments will be adjusted by County in accordance with advance fund and Program Income balances available in Subrecipient accounts. In addition, County reserves the right to liquidate funds available under this contract for costs incurred by County on behalf of Subrecipient.

D. Venue and Applicable Law

Should any action, whether real or asserted, at law or in equity, arise out of the execution, performance, attempted performance or non-performance of this Agreement, venue for said action shall be in Tarrant County, Texas for state court actions, and the Northern District of Texas, Fort Worth Division for federal court actions. This Agreement shall be governed by the laws of the State of Texas.

E. Written Instrument is Entire Agreement

This written instrument constitutes the entire agreement by the parties hereto concerning the work and services to be performed under this Agreement. Any prior or contemporaneous oral or written agreement which purports to vary the terms of this Agreement shall be void.

F. Paragraph Headings

The paragraph headings contained herein are for convenience in reference to this Agreement and are not intended to define or to limit the scope of any provision of this Agreement.

G. Change of Address

Subrecipient must notify County, specifically through the Tarrant County Community Development Department, in writing within ten (10) days of a change of address or a change of the officers or directors of Subrecipient. Failure to notify County of any such change gives County the immediate right to terminate the Agreement, without notice to Subrecipient.

H. Notices

Notices required by this Agreement shall be in writing and delivered via mail, commercial courier, or personal delivery or sent by facsimile or other electronic means. Any notice delivered or sent as aforesaid shall be effective on the date of delivery or sending. All notices and other written communications under this Agreement shall be addressed to the individuals in the capacities indicated below, unless otherwise modified by subsequent written notice.

All written notices to Tarrant County shall be addressed to:

Tarrant County Community Development Department
James A. McClinton, Director
2501 Parkview Drive, Suite 420
Fort Worth, Texas 76102-5816

Written notice to SafeHaven of Tarrant County shall be addressed to:

SafeHaven of Tarrant County
Kathryn Jacob, President/CEO
1010 N. Center Street
Arlington, TX 76011

I. Availability of Grant Funds

In the event that grant funds for the County are insufficient as determined by County or Community Development Administration guidelines to cover the cost of this Agreement, from the date County learns of such termination of funding, then County, upon providing written notice to the Subrecipient, may terminate this Agreement without penalty from any and all obligations under this Agreement.

J. Indemnity

SUBRECIPIENT COVENANTS AND AGREES TO INDEMNIFY AND DEFEND, AT ITS OWN EXPENSE, COUNTY AND ITS OFFICERS, AGENTS, SERVANTS AND EMPLOYEES FROM AND AGAINST ANY AND ALL CLAIMS OR SUITS FOR PROPERTY LOSS OR DAMAGE AND/OR PERSONAL INJURY, INCLUDING DEATH, TO ANY AND ALL PERSONS, OF WHATSOEVER KIND OR CHARACTER, WHETHER REAL OR ASSERTED, ARISING OUT OF OR IN CONNECTION WITH THE EXECUTION, PERFORMANCE, ATTEMPTED PERFORMANCE OR NONPERFORMANCE OF THIS AGREEMENT AND/OR THE OPERATIONS, ACTIVITIES AND SERVICES OF THE PROJECT(S) DESCRIBED HEREIN, WHETHER OR NOT CAUSED, IN WHOLE OR IN PART, BY ALLEGED NEGLIGENCE OF OFFICERS, AGENTS, SERVANTS, EMPLOYEES, CONTRACTORS OR SUBCONTRACTORS OF COUNTY. SUBRECIPIENT LIKEWISE COVENANTS AND AGREES TO AND DOES HEREBY INDEMNIFY AND HOLD HARMLESS COUNTY FROM AND AGAINST ANY AND ALL INJURY, DAMAGE OR DESTRUCTION OF PROPERTY OF COUNTY, ARISING OUT OF OR IN CONNECTION WITH ALL ACTS OR OMISSIONS OF SUBRECIPIENT, ITS OFFICERS, MEMBERS, AGENTS, EMPLOYEES, SUBCONTRACTORS, INVITEE(S), LICENSEES, OR PROGRAM PARTICIPANTS, OR CAUSED, IN WHOLE OR IN PART, BY ALLEGED NEGLIGENCE OF OFFICERS, AGENTS, SERVANTS, EMPLOYEES, CONTRACTORS OR SUBCONTRACTORS OF COUNTY.

IF, AS A RESULT OF ANY AUDIT, IT IS DETERMINED THAT SUBRECIPIENT HAS MISUSED, MISAPPLIED OR MISAPPROPRIATED ALL OR ANY PART OF THE FUNDS DESCRIBED HEREIN, SUBRECIPIENT AGREES TO INDEMNIFY, HOLD HARMLESS AND DEFEND COUNTY AND ITS OFFICERS, AGENTS, SERVANTS AND EMPLOYEES FROM AND AGAINST ANY AND ALL CLAIMS OR SUITS RESULTING FROM SUCH MISUSE, MISAPPLICATION OR MISAPPROPRIATION OF SUCH FUNDS AND TO REIMBURSE COUNTY THE AMOUNT OF SUCH MONIES SO MISUSED, MISAPPLIED OR MISAPPROPRIATED.

Subrecipient agrees to maintain blanket fidelity coverage in the form of insurance or bond in the amount of $42,000 with County named as the "Payee," to insure against loss from the fraud, theft or dishonesty of any Subrecipient's officer, agent, trustee, director or employee. The proceeds of such insurance or bond will be used to reimburse County for any and all loss of monies occasioned by any such act. To effectuate such reimbursement, such bond will include a rider stating that reimbursement for any loss or losses there under will be made directly to County for the uses and benefit of County.

K. Waiver of Immunity

If Subrecipient, as a charitable or nonprofit organization, has or claims an immunity or exemption (statutory or otherwise) from and against liability for damages or injury, including death, to persons or property, Subrecipient hereby expressly waives its rights to plead defensively such immunity or exemption against County. This section shall not be construed to affect County's immunities under constitutional, statutory or common law.

L. Form 1295 Compliance

Subrecipient acknowledges and agrees that it has fully, accurately, and completely disclosed all interested parties in the Form 1295 electronically filed with the Texas Ethics Commission as required by law, and that the attached signed copy attached as Exhibit A is a full and true copy of said filed form.

M. Compliance with Laws

In providing the services required by this Agreement, Vendor must observe and comply with all applicable federal, state, and local statutes, ordinances, rules, and regulations, including, without limitation, workers' compensation laws, minimum and maximum salary and wage statutes and regulations, and non-discrimination laws and regulations. Vendor shall be responsible for ensuring its compliance with any laws and regulations applicable to its business, including maintaining any necessary licenses and permits.

IN WITNESS WHEREOF, the parties hereto have executed this contract in Tarrant County, Texas, this ____ day of _____, 2025.

Count of Tarrant, Texas
("COUNTY")

_____
Judge Tim O'Hare

ATTEST:

By: _____

Date: _____

SafeHaven of Tarrant County
("SUBRECIPIENT")

Stephanie Storey
Authorized Representative Signature

Stephanie Storey
Printed Name of Authorized Representative

Chief Operating Officer
Title of Authorized Representative

ATTEST:

By: Sheri Campbell-Husband

Date: August 28, 2025

Availability of Funds: _____ $_____
County Auditor

APPROVED AS TO FORM*

_____
Criminal District Attorney's Office

*By law, the Criminal District Attorney's Office may only approve contracts for its clients. We reviewed this document as to form from our client's legal perspective. Other parties may not rely on this approval. Instead those parties should seek contract review from independent counsel.

Vendor Certification Addendum to Tarrant County Contracts Entered Into on or After September 1, 2021 Required by New Texas State Laws

This Addendum relates to the following contract: COMMUNITY DEVELOPMENT BLOCK GRANT SUBRECIPIENT AGREEMENT FOR PUBLIC SERVICES ON A REIMBURSEMENT BASIS-SAFE HAVEN

FISCAL FUNDING ACKNOWLEDGMENT
Notwithstanding any language to the contrary, Vendor acknowledges TARRANT COUNTY is a governmental entity and agrees TARRANT COUNTY (customer) may terminate this Agreement for future fiscal years if sufficient funding is not appropriated or allocated.

For All County Contracts Entered into on or after September 1, 2021, Vendor Must Certify:

Vendor is EXEMPT from Certification regarding Energy Companies and Firearm Entities or Firearm Trade Associations:

Vendor is a sole proprietorship OR is a non-profit entity OR Vendor is a company that does NOT have 10 or more full-time employees AND/OR this contract does NOT have a value of $ 100,000.00 or more that is to be paid wholly or partly from public funds of the governmental entity.

If the Vendor Cannot Certify that it is EXEMPT as Above, Vendor Must Certify as Follows:

Vendor is NOT EXEMPT and Certifies as follows:

Boycott of Energy Companies Prohibited. In compliance with Section 2274.002 of the Texas Government Code (added by 87th Legislature, S.B. 13), Vendor verifies that it does not boycott energy companies and will not boycott energy companies during the term of the above-described contract. "Boycott energy company" is defined in Section 809.001(1) (added by 87th Legislature, S.B. 13) and means, without an ordinary business purpose, refusing to deal with, terminating business activities with, or otherwise taking any action that is intended to penalize, inflict economic harm on, or limit commercial relations with a company because the company: (A) engages in the exploration, production, utilization, transportation, sale, or manufacturing of fossil fuel-based energy and does not commit or pledge to meet environmental standards beyond applicable federal and state law; or (B) does business with a company described by subsection (A).

Discrimination against Firearm Entities or Firearm Trade Associations Prohibited. In compliance with Section 2274.002 of the Texas Government Code (added by 87th Legislature, S.B. 19), Vendor verifies that it does not have a practice, policy, guidance, or directive that discriminates against a firearm entity or firearm trade association; and will not discriminate during the term of the above-described contract] against a firearm entity or firearm trade association. "Discriminate against a firearm entity or firearm trade association" is defined in Section 2274.001(3) (added by 87th Legislature, S.B. 19) and means, with respect to the entity or association, to: (i) refuse to engage in the trade of any goods or services with the entity or association based solely on its status as a

firearm entity or firearm trade association; (ii) refrain from continuing an existing business relationship with the entity or association based solely on its status as a firearm entity or firearm trade association; or (iii) terminate an existing business relationship with the entity or association based solely on its status as a firearm entity or firearm trade association; the term *does not include*: (i) the established policies of a merchant, retail seller, or platform that restrict or prohibit the listing or selling of ammunition, firearms, or firearm accessories; and (ii) a company's refusal to engage in the trade of any goods or services, decision to refrain from continuing an existing business relationship, or decision to terminate an existing business relationship: (aa) to comply with federal, state, or local law, policy, or regulations or a directive by a regulatory agency; or (bb) for any traditional business reason that is specific to the customer or potential customer and not based solely on an entity's or association's status as a firearm entity or firearm trade association.

Vendor Hereby Certifies (Mark Applicable Certification):

X Vendor is EXEMPT from Certification as set out above.

____ Vendor is NOT EXEMPT from Certification as set out above, and Vendor Certifies that it does not and will not Boycott Energy Companies and that is does not and will not engage in prohibited Discrimination against Firearm Entities or Firearm Trade Associations.

CERTIFIED by:

Stephanie Storey
Signature of Certifying Person

Stephanie Storey
Printed Name of Certifying Person

Chief Operating Officer
Title of Certifying Person

Safe Haven of Tarrant County
Name of Vendor Company

8/28/2025
Date Certified

TARRANT COUNTY
COMMISSIONERS COURT COMMUNICATION

Court Date: December 9, 2025	**Court Order #:**	**Page:** 1 of 65

Department: Community Development	**Prepared By:** Janel Holt, SHP Manager	**Approved By:** James A. McClinton, Director

SUBJECT:

Consideration of Program Year 2025 Emergency Solutions Grant Program Subrecipient Agreements between Tarrant County and Non-Profit Agencies in Tarrant County for Emergency Shelter Operations

*****CONSENT AGENDA *****

COMMISSIONERS COURT ACTION REQUESTED

It is requested that the Commissioners Court consider Program Year (PY) 2025 Emergency Solutions Grant (ESG) Program Subrecipient Agreements between Tarrant County and the following non-profit agencies in Tarrant County for emergency shelter operations:

ACH Child and Family Services
Arlington Life Shelter
Presbyterian Night Shelter
SafeHaven of Tarrant County
The Salvation Army - Arlington
The Salvation Army - Mabee Center
True Worth Place

BACKGROUND

On June 3, 2025, the Commissioners Court, through Court Order #145328, approved the 2025-2029 Consolidated Plan for Tarrant County Community Development. The Action Plan includes provisions for the Tarrant County ESG program.

The Tarrant County ESG program provides support and funding for emergency shelter operations and homelessness prevention. Through the ESG program, Tarrant County reimburses local shelters through subrecipient agreements for the cost of rent, electricity, water, and gas utilities to ensure the continued operation of emergency shelters for homeless persons. The ESG homelessness prevention program also provides case management and short-term rental assistance for income-qualified renters with eviction notices to prevent homelessness.

On October 14, 2025, the Commissioners Court, through Court Order #146175, approved the PY 2025 ESG Program Agreement between Tarrant County and the U.S. Department of Housing and Urban Development (HUD) in the amount of $253,814.00.

With approval, Tarrant County will reimburse the following non-profit agencies for ESG-eligible expenses to provide safe, decent emergency shelter to those experiencing homelessness.

ACH Child and Family Services	$ 9,983.67
Arlington Life Shelter	$ 3,379.34
Presbyterian Night Shelter	$ 31,982.36
SafeHaven of Tarrant County	$ 32,986.34
The Salvation Army - Arlington	$ 9,636.69
The Salvation Army - Mabee Center	$ 14,100.34
True Worth Place	$ 18,914.37
Total	$120,983.11

The terms of these agreements are from December 1, 2025 through June 30, 2026 with no option to renew.

This agreement has been approved as to form by the Criminal District Attorney's Office.

FISCAL IMPACT

Funding in the amount of $120,983.11 is available through ESG grant #E-25-UC-48-0001. Funded agencies are responsible for match requirements.

PASSED AND APPROVED on December 9, 2025.

COUNTY OF TARRANT
STATE OF TEXAS

By: Separate Electronic Signature Page
Tim O'Hare
County Judge

APPROVED AS TO FORM:

_____
District Attorney's Office*

*By law, the District Attorney's Office may only approve contracts for its clients. We reviewed this document as to form from our client's legal perspective. Other parties may not rely on this approval. Instead, those parties should seek contract review from independent counsel.

Attachments

ESG Subrecipient Agreements

STATE OF TEXAS §
§ **EMERGENCY SOLUTIONS GRANT PROGRAM**
§ **AGREEMENT**
COUNTY OF TARRANT §

WHEREAS, Tarrant County is an Urban Entitlement County and has received a grant through the 2025 Emergency Solutions Grant Program ("ESG") (CFDA No. 14.231) under the provisions in Title IV of the Stewart B. McKinney Homeless Act (**Grant E-25-UC-48-0001**); and

WHEREAS, Tarrant County has an approved Consolidated Plan outlining the needs of the homeless in Tarrant County, and

WHEREAS, the Tarrant County Community Development Department manages the Emergency Solutions Grant Program, and may perform the duties and responsibilities of Tarrant County under this Contract; and

WHEREAS, an emergency shelter is defined as any facility, the primary purpose of which is to provide temporary or transitional shelter for the homeless in general or for specific populations of the homeless; and

WHEREAS, "homelessness" is defined in FR–5333–F–02; and

WHEREAS, **ACH Child and Family Services** (UEI #TGGBCN5KEMU9) (the "Agency") has been designated as an emergency shelter for the homeless to receive funds allocated to Tarrant County by the U.S. Department of Housing and Urban Development;

Now, therefore, it is agreed as follows:

PURPOSE

This Agreement is entered into by and between **Tarrant County, Texas** (the "County") and the Agency for the purpose of providing safe, decent emergency shelter for the homeless, a Tarrant County priority consistent with the Tarrant County Consolidated Plan.

SCOPE OF SERVICES

From the proceeds awarded to the County under the **Emergency Solutions Grant Program** (the "Grant"), the County will reimburse the Agency a budgeted amount for providing emergency shelter for the homeless. The County will reimburse The Agency for emergency shelter facility operating expenses. Eligible expenses include utility costs of electric, gas and water services provided at the emergency shelter facility.

Approved Budget: The total one-year project budget for Emergency Solutions Grant Program # E-25-UC-48-0001 is **$253,814.00.** The County, upon submission of written requests from the Agency, will reimburse the Agency out of the total project budget for allowable expenditures up to, but not exceeding, the following specified amounts:

	Maximum Reimbursement
Emergency Shelter Operations Expenses	**$9,983.67**

The County will reimburse the Agency for this service upon timely submission of a monthly statement of expenditures. The County will only reimburse the Agency under this grant for approved eligible expenses as defined by 24 CFR Part 576 and 42 USC § 11375. The County will not reimburse the Agency for ineligible expenses or expenses incurred in excess of the maximum reimbursement amount under the total project budget.

Match Requirement: The Agency is responsible for a 100% one-to-one, dollar-for-dollar cash match payment for this grant.

TERM OF AGREEMENT

This Agreement shall be for a term of seven (7) months, commencing on December 1, 2025 and terminating June 30, 2026.

DOCUMENTATION, REPORTS AND AUDITS

The Agency must provide the following documentation to the County with each claim for reimbursement per 24 CFR 576 and 42 USC 11375:

1. Documentation of utility costs paid for the operation of the emergency shelter facility.
2. Reports detailing the unduplicated count and demographic data of homeless persons served must be entered into the Homeless Management Information System (HMIS) at least monthly. The County will check HMIS periodically to extract data. By accepting ESG funding from the County, the Agency authorizes the operators of the local HMIS system to share Agency data with the County for all programs that are touched by these source or matched funds.
3. Documentation of match funding (from sources other than any Emergency Solutions Grant) in the same amount as the amount claimed for reimbursement. Matching contributions may be obtained from any source, including any Federal source other than the ESG program, as well as state, local, and private sources. However, the following requirements apply to matching contributions from a Federal source of funds:

    a. The recipient must ensure the laws governing any funds to be used as matching contributions do not prohibit those funds from being used to match ESG funds.
    b. If ESG funds are used to satisfy the matching requirements of another Federal program, then funding from that program may not be used to satisfy the matching requirements under this Agreement.
    c. To be eligible for reimbursement, the Agency's documentation must include a description of the sources and amounts of such supplemental funds. Such reports and statements must be signed by a duly authorized agent of the Agency.

The County is under no obligation to disburse funds for expenditures that occurred more than thirty (30) days prior to the first day of the quarter for which documentation and reports are submitted.

The Agency agrees to cooperate fully with the County in monitoring the Agency. In this regard, the Agency agrees to keep records sufficient to document its compliance with all applicable laws, regulations and terms of this Agreement. All records shall be retained for five (5) years after the expenditure of all funds from the grant under which the program participant was served. Tarrant County, the U.S. Department of Housing and Urban Development ("HUD"), and the United States Comptroller General, or their representatives, shall have access to any books, documents, records and papers relating to the operations of the Agency under this contract for the purpose of audit, examination, exception and transcription at all reasonable hours at the offices of the Agency. A single audit of all the Agency's operations may be conducted upon demand of the County or an independent public accountant of the County's choice, in accordance with 2 CFR part 200.

If, as a result of any audit, it is determined that the agency has misused, misapplied or misappropriated all or any part of the grant funds described herein, the agency agrees to indemnify, hold harmless and defend the county and its officers, agents, servants and employees from and against any and all claims or suits resulting from such misuse, misapplication or misappropriation of such funds and to reimburse the county the amount of such monies so misused, misapplied or misappropriated.

The agency covenants and agrees that, in the event an audit is conducted by the county or on behalf of the county, which audit reveals any improper expenditures by the agency, its officers, agents, servants, employees and/or subcontractors, of the funds granted hereunder and such questioned costs are disallowed and become final under the procedures of the party by whom or on whose behalf said audit is conducted, then the amount of such disallowed cost, plus any sums the county is required to reimburse to HUD, shall constitute liquidated damages for the breach of that portion of the contract audited. In case such disallowed cost becomes final as herein set out, the agency agrees to pay the county said sum for the agency's failure to perform the duties, bear the liabilities and fulfill the obligations imposed upon it by this agreement.

CONFLICT OF INTEREST

Agency agrees to abide by the provisions of 2 CFR 200.318 with respect to conflicts of interest, and covenants that it presently has no personal or financial interest or benefit, and shall not acquire any personal or financial interest or benefit, direct or indirect, which would conflict in any manner or degree with the performance of services required under this agreement.

These conflict of interest provisions apply to any person who is an employee, agent, consultant, officer, or elected or appointed official of the county or of the sponsor, who exercises or has exercised any functions or responsibilities with respect to assisted activities or who is in a position to participate in a decision making process or gain inside information with regard to such activities during his or her tenure or for one year thereafter.

Participation by homeless individuals who also are participants under the program in policy or

decision making under 24 CFR 583.300(f) does not constitute a conflict of interest.

To the extent permitted by State or local law or regulations, such standards of conduct will provide for penalties, sanctions, or other disciplinary actions for violations of such standards by the subrecipients officers, employees, or agents, or by contractors or their agents.

Likewise, all procurement transactions shall be conducted in a manner to provide, to the maximum extent practical, open and free competition. Agency shall be alert to organizational conflicts of interest as well as noncompetitive practices among contractors that may restrict or eliminate competition or otherwise restrain trade. Awards shall be made to the bidder or offeror whose bid or offer is responsive to the solicitation and is most advantageous to the recipient, price, quality and other factors considered. The other factors shall include the bidder's or offeror's compliance with Section 3 of the Housing and Urban Development Act of 1968 (12 U.S.C. 1701u), hereafter referred to as "Section 3." Section 3 provides that, to the greatest extent feasible, and consistent with existing Federal, State, and local laws, and regulations, economic opportunities generated by certain HUD financial assistance shall clearly set forth all requirements that the bidder or offeror shall fulfill in order for the bid or offer to be evaluated by the recipient. Any and all bids or offers may be rejected when it is in the recipient's interest to do so.

Any violations of these conflict of interest provisions by Agency and/or its subrecipients or contractors shall render this contract voidable by Tarrant County.

CLIENT HEALTH TESTING

The Tarrant County homeless population is experiencing an increase in the number of persons who test positive for certain diseases, such as tuberculosis, syphilis and HIV. All agencies that contract with Tarrant County are encouraged to facilitate testing of all clients for these and any other disease(s) that may be considered a public health epidemic.

1295 COMPLIANCE

Agency acknowledges and agrees that it has fully, accurately, and completely disclosed all interested parties in the attached Form 1295, and has acknowledged the completeness of this disclosure by filing the Form 1295, attached as Exhibit A, with the Texas Ethics Commission as required by law.

GOVERNING LAW AND VENUE

Should any action, whether real or asserted, at law or in equity, arise out of the execution, performance, attempted performance or non-performance of this Agreement, venue for said action shall be in Tarrant County, Texas for state court actions and the Northern District of Texas, Fort Worth Division for federal court actions. This Agreement shall be governed by the laws of the State of Texas.

COMPLIANCE WITH LAWS

In providing the services required by this Agreement, Vendor must observe and comply with all applicable federal, state, and local statutes, ordinances, rules, and regulations, including, without limitation, workers' compensation laws, minimum and maximum salary and wage statutes and regulations, and non-discrimination laws and regulations. Vendor shall be responsible for ensuring its compliance with any laws and regulations applicable to its business, including maintaining any necessary licenses and permits.

APPLICABLE FEDERAL LAWS

The Agency agrees to comply with all Federal laws and regulations applicable to this agreement as administrated under HUD's rules and guidelines. Laws and regulations governing the Emergency Solutions Grant Program include the following but not limited to:

Title VI of Civil Rights Act of 1964 (42 U.S.C. 2000(d) *et seq.*);
Title VIII of Civil Rights Act of 1968 (42 U.S.C. 3601 *et seq.*);
Executive Orders 11063, 11246, as amended by 11375 and as supplemented by Department of Labor regulations (41 CFR Part 60);
Age Discrimination Act of 1975 (42 U.S.C. 6101 *et seq.*);
Section 3 of the Housing and Urban Development Act of 1968, as amended, 12 U.S.C. 1701(u);
Violence Against Women Act (VAWA) of 2013;
Imprisoned or Detained Individual Exclusion (42 U.S.C. 11302);
Lead-Based Paint Poisoning Prevention Act and 24 CFR Part 35;
Uniform Relocation Act and 49 CFR Part 24, subpart B and 24 CFR 576.408;
Conflicts of Interest at 24 CFR 576.404;
Environmental Review at 24 CFR 576.407(d);
and,
Uniform Administrative Requirements, Cost Principles, and Audit Requirements for Federal Awards 2 CFR part 200.

ANNUAL FISCAL CONDITION PRECEDENT

The parties acknowledge and agree that the Tarrant County, Texas is a governmental entity subject to an annual budgetary process and restrictions on spending in conformity with that process and its approved budget. The parties further agree that, notwithstanding any other language or provision herein to the contrary, if for any reason funds are not budgeted expressly for this agreement for the County's fiscal years subsequent to that in which funds for this Agreement are first allocated, the County may immediately and without penalty terminate this Agreement; provided, however, that in no event shall such a termination be effective earlier than the expiration of the last date for which funds have already been so allocated under an existing, finally approved budget.

NOTICES

Either party maintains the right to terminate this agreement with a thirty (30) day written notice by Registered or Certified Mail, Return Receipt Requested to the other party. All written notices to the County shall be addressed to:

Tarrant County Community Development Division
Attn: Janel Holt
2501 Parkview Drive, Suite 420
Fort Worth, Texas 76102

Written notice to the Agency shall be addressed to:

ACH Child and Family Services
Attn: Katherine Tilley
3712 Wichita Street
Fort Worth, Texas 76119

EXECUTION OF AGREEMENT

This agreement may be executed in one or more counterparts, each of which will be deemed to be an original copy of this agreement, and all of which, when taken together, shall be deemed to constitute one and the same agreement. The exchange of copies of this agreement and of signature pages by electronic transmission shall constitute effective execution and delivery of this agreement as to the parties and may be used in lieu of the original agreement for all purposes. Signatures of the parties transmitted or executed electronically shall be deemed to be their original signatures for any purpose whatsoever.

AGENCY

Wayne Caum
Authorized Representative

1.	Subrecipient Name	ACH Child and Family Services
2.	Subrecipient UEI Number	TGGBCN5KEMU9
3.	Federal Award Identification Number (FAIN)	E-25-UC-48-0001
4.	Federal Award Date	7/1/2025
5.	Subaward Period of Performance Start and End Date	12/1/2025-6/30/2026
6.	Amount of Federal Funds Obligated by This Action	TBD
7.	Total Amount of Federal Funds Obligated to the Subrecipient	$9,983.67
8.	Federal Award Project Description, as required by FFATA	ESG Program
9.	Name of Federal Awarding Agency	U.S. Department of Housing and Urban Development
10.	Pass-Through Entity	Tarrant County
11.	Contact Information for Awarding Official	Tarrant County 100 E. Weatherford Street Fort Worth, TX 76196-0001
12.	CFDA Number and Name	2025 Emergency Solutions Grant Program, 14.231
13.	Identification if the Award is R&D	N/A
14.	Indirect Cost Rate	N/A

CERTIFICATE OF INTERESTED PARTIES

FORM 1295

Complete Nos. 1 - 4 and 6 if there are interested parties.
Complete Nos. 1, 2, 3, 5, and 6 if there are no interested parties.

OFFICE USE ONLY
CERTIFICATION OF FILING

Certificate Number:
2025-1317444

Date Filed:
05/30/2025

Date Acknowledged:

1 Name of business entity filing form, and the city, state and country of the business entity's place of business.
ACH Child and Family Services
Fort Worth, TX United States

2 Name of governmental entity or state agency that is a party to the contract for which the form is being filed.
Tarrant County, Texas

3 Provide the identification number used by the governmental entity or state agency to track or identify the contract, and provide a description of the services, goods, or other property to be provided under the contract.
E-25-UC-48-0001
Emergency Shelter Operations Expenses

4 Name of Interested Party	City, State, Country (place of business)	Nature of interest (check applicable)	
		Controlling	Intermediary

5 Check only if there is NO Interested Party. [X]

6 UNSWORN DECLARATION

My name is Wayne Carson, and my date of birth is 1/21/1960.

My address is 3712 Wichita Street (street), Fort Worth (city), TX (state), 76119 (zip code), USA (country).

I declare under penalty of perjury that the foregoing is true and correct.

Executed in Tarrant County, State of Texas, on the 2nd day of June (month), 2025 (year).

Wayne Carson

Signature of authorized agent of contracting business entity
(Declarant)

STATE OF TEXAS §
§ **EMERGENCY SOLUTIONS GRANT PROGRAM**
§ **AGREEMENT**
COUNTY OF TARRANT §

WHEREAS, Tarrant County is an Urban Entitlement County and has received a grant through the 2025 Emergency Solutions Grant Program ("ESG") (CFDA No. 14.231) under the provisions in Title IV of the Stewart B. McKinney Homeless Act (**Grant E-25-UC-48-0001**); and

WHEREAS, Tarrant County has an approved Consolidated Plan outlining the needs of the homeless in Tarrant County, and

WHEREAS, the Tarrant County Community Development Department manages the Emergency Solutions Grant Program, and may perform the duties and responsibilities of Tarrant County under this Contract; and

WHEREAS, an emergency shelter is defined as any facility, the primary purpose of which is to provide temporary or transitional shelter for the homeless in general or for specific populations of the homeless; and

WHEREAS, "homelessness" is defined in FR–5333–F–02; and

WHEREAS, **Arlington Life Shelter** (UEI #F7KEM2DVDXN4) (the "Agency") has been designated as an emergency shelter for the homeless to receive funds allocated to Tarrant County by the U.S. Department of Housing and Urban Development;

Now, therefore, it is agreed as follows:

PURPOSE

This Agreement is entered into by and between **Tarrant County, Texas** (the "County") and the Agency for the purpose of providing safe, decent emergency shelter for the homeless, a Tarrant County priority consistent with the Tarrant County Consolidated Plan.

SCOPE OF SERVICES

From the proceeds awarded to the County under the **Emergency Solutions Grant Program** (the "Grant"), the County will reimburse the Agency a budgeted amount for providing emergency shelter for the homeless. The County will reimburse The Agency for emergency shelter facility operating expenses. Eligible expenses include utility costs of electric, gas and water services provided at the emergency shelter facility.

Approved Budget: The total one-year project budget for Emergency Solutions Grant Program # E-25-UC-48-0001 is **$253,814.00.** The County, upon submission of written requests from the Agency, will reimburse the Agency out of the total project budget for allowable expenditures up to, but not exceeding, the following specified amounts:

	Maximum Reimbursement
Emergency Shelter Operations Expenses	**$3,379.34**

The County will reimburse the Agency for this service upon timely submission of a monthly statement of expenditures. The County will only reimburse the Agency under this grant for approved eligible expenses as defined by 24 CFR Part 576 and 42 USC § 11375. The County will not reimburse the Agency for ineligible expenses or expenses incurred in excess of the maximum reimbursement amount under the total project budget.

Match Requirement: The Agency is responsible for a 100% one-to-one, dollar-for-dollar cash match payment for this grant.

TERM OF AGREEMENT

This Agreement shall be for a term of seven (7) months, commencing on December 1, 2025 and terminating June 30, 2026.

DOCUMENTATION, REPORTS AND AUDITS

The Agency must provide the following documentation to the County with each claim for reimbursement per 24 CFR 576 and 42 USC 11375:

1. Documentation of utility costs paid for the operation of the emergency shelter facility.
2. Reports detailing the unduplicated count and demographic data of homeless persons served must be entered into the Homeless Management Information System (HMIS) at least monthly. The County will check HMIS periodically to extract data. By accepting ESG funding from the County, the Agency authorizes the operators of the local HMIS system to share Agency data with the County for all programs that are touched by these source or matched funds.
3. Documentation of match funding (from sources other than any Emergency Solutions Grant) in the same amount as the amount claimed for reimbursement. Matching contributions may be obtained from any source, including any Federal source other than the ESG program, as well as state, local, and private sources. However, the following requirements apply to matching contributions from a Federal source of funds:

    a. The recipient must ensure the laws governing any funds to be used as matching contributions do not prohibit those funds from being used to match ESG funds.
    b. If ESG funds are used to satisfy the matching requirements of another Federal program, then funding from that program may not be used to satisfy the matching requirements under this Agreement.
    c. To be eligible for reimbursement, the Agency's documentation must include a description of the sources and amounts of such supplemental funds. Such reports and statements must be signed by a duly authorized agent of the Agency.

The County is under no obligation to disburse funds for expenditures that occurred more than thirty (30) days prior to the first day of the quarter for which documentation and reports are submitted.

The Agency agrees to cooperate fully with the County in monitoring the Agency. In this regard, the Agency agrees to keep records sufficient to document its compliance with all applicable laws, regulations and terms of this Agreement. All records shall be retained for five (5) years after the expenditure of all funds from the grant under which the program participant was served. Tarrant County, the U.S. Department of Housing and Urban Development ("HUD"), and the United States Comptroller General, or their representatives, shall have access to any books, documents, records and papers relating to the operations of the Agency under this contract for the purpose of audit, examination, exception and transcription at all reasonable hours at the offices of the Agency. A single audit of all the Agency's operations may be conducted upon demand of the County or an independent public accountant of the County's choice, in accordance with 2 CFR part 200.

If, as a result of any audit, it is determined that the agency has misused, misapplied or misappropriated all or any part of the grant funds described herein, the agency agrees to indemnify, hold harmless and defend the county and its officers, agents, servants and employees from and against any and all claims or suits resulting from such misuse, misapplication or misappropriation of such funds and to reimburse the county the amount of such monies so misused, misapplied or misappropriated.

The agency covenants and agrees that, in the event an audit is conducted by the county or on behalf of the county, which audit reveals any improper expenditures by the agency, its officers, agents, servants, employees and/or subcontractors, of the funds granted hereunder and such questioned costs are disallowed and become final under the procedures of the party by whom or on whose behalf said audit is conducted, then the amount of such disallowed cost, plus any sums the county is required to reimburse to HUD, shall constitute liquidated damages for the breach of that portion of the contract audited. In case such disallowed cost becomes final as herein set out, the agency agrees to pay the county said sum for the agency's failure to perform the duties, bear the liabilities and fulfill the obligations imposed upon it by this agreement.

CONFLICT OF INTEREST

Agency agrees to abide by the provisions of 2 CFR 200.318 with respect to conflicts of interest, and covenants that it presently has no personal or financial interest or benefit, and shall not acquire any personal or financial interest or benefit, direct or indirect, which would conflict in any manner or degree with the performance of services required under this agreement.

These conflict of interest provisions apply to any person who is an employee, agent, consultant, officer, or elected or appointed official of the county or of the sponsor, who exercises or has exercised any functions or responsibilities with respect to assisted activities or who is in a position to participate in a decision making process or gain inside information with regard to such activities during his or her tenure or for one year thereafter.

Participation by homeless individuals who also are participants under the program in policy or

decision making under 24 CFR 583.300(f) does not constitute a conflict of interest.

To the extent permitted by State or local law or regulations, such standards of conduct will provide for penalties, sanctions, or other disciplinary actions for violations of such standards by the subrecipients officers, employees, or agents, or by contractors or their agents.

Likewise, all procurement transactions shall be conducted in a manner to provide, to the maximum extent practical, open and free competition. Agency shall be alert to organizational conflicts of interest as well as noncompetitive practices among contractors that may restrict or eliminate competition or otherwise restrain trade. Awards shall be made to the bidder or offeror whose bid or offer is responsive to the solicitation and is most advantageous to the recipient, price, quality and other factors considered. The other factors shall include the bidder's or offeror's compliance with Section 3 of the Housing and Urban Development Act of 1968 (12 U.S.C. 1701u), hereafter referred to as "Section 3." Section 3 provides that, to the greatest extent feasible, and consistent with existing Federal, State, and local laws, and regulations, economic opportunities generated by certain HUD financial assistance shall clearly set forth all requirements that the bidder or offeror shall fulfill in order for the bid or offer to be evaluated by the recipient. Any and all bids or offers may be rejected when it is in the recipient's interest to do so.

Any violations of these conflict of interest provisions by Agency and/or its subrecipients or contractors shall render this contract voidable by Tarrant County.

CLIENT HEALTH TESTING

The Tarrant County homeless population is experiencing an increase in the number of persons who test positive for certain diseases, such as tuberculosis, syphilis and HIV. All agencies that contract with Tarrant County are encouraged to facilitate testing of all clients for these and any other disease(s) that may be considered a public health epidemic.

1295 COMPLIANCE

Agency acknowledges and agrees that it has fully, accurately, and completely disclosed all interested parties in the attached Form 1295, and has acknowledged the completeness of this disclosure by filing the Form 1295, attached as Exhibit A, with the Texas Ethics Commission as required by law.

GOVERNING LAW AND VENUE

Should any action, whether real or asserted, at law or in equity, arise out of the execution, performance, attempted performance or non-performance of this Agreement, venue for said action shall be in Tarrant County, Texas for state court actions and the Northern District of Texas, Fort Worth Division for federal court actions. This Agreement shall be governed by the laws of the State of Texas.

COMPLIANCE WITH LAWS

In providing the services required by this Agreement, Vendor must observe and comply with all applicable federal, state, and local statutes, ordinances, rules, and regulations, including, without limitation, workers' compensation laws, minimum and maximum salary and wage statutes and regulations, and non-discrimination laws and regulations. Vendor shall be responsible for ensuring its compliance with any laws and regulations applicable to its business, including maintaining any necessary licenses and permits.

APPLICABLE FEDERAL LAWS

The Agency agrees to comply with all Federal laws and regulations applicable to this agreement as administrated under HUD's rules and guidelines. Laws and regulations governing the Emergency Solutions Grant Program include the following but not limited to:

Title VI of Civil Rights Act of 1964 (42 U.S.C. 2000(d) *et seq.*);
Title VIII of Civil Rights Act of 1968 (42 U.S.C. 3601 *et seq.*);
Executive Orders 11063, 11246, as amended by 11375 and as supplemented by Department of Labor regulations (41 CFR Part 60);
Age Discrimination Act of 1975 (42 U.S.C. 6101 *et seq.*);
Section 3 of the Housing and Urban Development Act of 1968, as amended, 12 U.S.C. 1701(u);
Violence Against Women Act (VAWA) of 2013;
Imprisoned or Detained Individual Exclusion (42 U.S.C. 11302);
Lead-Based Paint Poisoning Prevention Act and 24 CFR Part 35;
Uniform Relocation Act and 49 CFR Part 24, subpart B and 24 CFR 576.408;
Conflicts of Interest at 24 CFR 576.404;
Environmental Review at 24 CFR 576.407(d);
and,
Uniform Administrative Requirements, Cost Principles, and Audit Requirements for Federal Awards 2 CFR part 200.

ANNUAL FISCAL CONDITION PRECEDENT

The parties acknowledge and agree that the Tarrant County, Texas is a governmental entity subject to an annual budgetary process and restrictions on spending in conformity with that process and its approved budget. The parties further agree that, notwithstanding any other language or provision herein to the contrary, if for any reason funds are not budgeted expressly for this agreement for the County's fiscal years subsequent to that in which funds for this Agreement are first allocated, the County may immediately and without penalty terminate this Agreement; provided, however, that in no event shall such a termination be effective earlier than the expiration of the last date for which funds have already been so allocated under an existing, finally approved budget.

NOTICES

Either party maintains the right to terminate this agreement with a thirty (30) day written notice by Registered or Certified Mail, Return Receipt Requested to the other party. All written notices to the County shall be addressed to:

Tarrant County Community Development Division
Attn: Janel Holt
2501 Parkview Drive, Suite 420
Fort Worth, Texas 76102

Written notice to the Agency shall be addressed to:

Arlington Life Shelter
Attn: Stephanie Melchert
325 W. Division St.
Arlington, TX 76011

EXECUTION OF AGREEMENT

This agreement may be executed in one or more counterparts, each of which will be deemed to be an original copy of this agreement, and all of which, when taken together, shall be deemed to constitute one and the same agreement. The exchange of copies of this agreement and of signature pages by electronic transmission shall constitute effective execution and delivery of this agreement as to the parties and may be used in lieu of the original agreement for all purposes. Signatures of the parties transmitted or executed electronically shall be deemed to be their original signatures for any purpose whatsoever.

AGENCY

Stephanie R Meichert
Authorized Representative
President/CEO
Arlington Life Shelter

1.	Subrecipient Name	Arlington Life Shelter
2.	Subrecipient UEI Number	F7KEM2DVDXN4
3.	Federal Award Identification Number (FAIN)	E-25-UC-48-0001
4.	Federal Award Date	7/1/2025
5.	Subaward Period of Performance Start and End Date	12/1/2025-6/30/2026
6.	Amount of Federal Funds Obligated by This Action	TBD
7.	Total Amount of Federal Funds Obligated to the Subrecipient	$3,379.34
8.	Federal Award Project Description, as required by FFATA	ESG Program
9.	Name of Federal Awarding Agency	U.S. Department of Housing and Urban Development
10.	Pass-Through Entity	Tarrant County
11.	Contact Information for Awarding Official	Tarrant County 100 E. Weatherford Street Fort Worth, TX 76196-0001
12.	CFDA Number and Name	2025 Emergency Solutions Grant Program, 14.231
13.	Identification if the Award is R&D	N/A
14.	Indirect Cost Rate	N/A

CERTIFICATE OF INTERESTED PARTIES

FORM 1295

Complete Nos. 1 - 4 and 6 if there are interested parties.
Complete Nos. 1, 2, 3, 5, and 6 if there are no interested parties.

OFFICE USE ONLY
CERTIFICATION OF FILING

Certificate Number:
2025-1321058

Date Filed:
06/06/2025

Date Acknowledged:

1 Name of business entity filing form, and the city, state and country of the business entity's place of business.
Arlington Life Shelter
ARLINGTON, TX United States

2 Name of governmental entity or state agency that is a party to the contract for which the form is being filed.
Arlington Life Shelter

3 Provide the identification number used by the governmental entity or state agency to track or identify the contract, and provide a description of the services, goods, or other property to be provided under the contract.
E-25-UC-48-001
Reimburse the Agency a budget amount for providing emergency shelter for the homeless.

4 Name of Interested Party	City, State, Country (place of business)	Nature of interest (check applicable)	
		Controlling	Intermediary

5 Check only if there is NO Interested Party. [X]

6 UNSWORN DECLARATION

My name is Stephanie Melchert, and my date of birth is 12-20-65.

My address is 325 W. Division St, Arlington, TX, 76011, USA.
(street) (city) (state) (zip code) (country)

I declare under penalty of perjury that the foregoing is true and correct.

Executed in Tarrant County, State of Texas, on the 6 day of June (month), 20 25 (year).

Stephanie N Melchert
Signature of authorized agent of contracting business entity
(Declarant)

STATE OF TEXAS §
§ **EMERGENCY SOLUTIONS GRANT PROGRAM**
§ **AGREEMENT**
COUNTY OF TARRANT §

WHEREAS, Tarrant County is an Urban Entitlement County and has received a grant through the 2025 Emergency Solutions Grant Program ("ESG") (CFDA No. 14.231) under the provisions in Title IV of the Stewart B. McKinney Homeless Act (**Grant E-25-UC-48-0001**); and

WHEREAS, Tarrant County has an approved Consolidated Plan outlining the needs of the homeless in Tarrant County, and

WHEREAS, the Tarrant County Community Development Department manages the Emergency Solutions Grant Program, and may perform the duties and responsibilities of Tarrant County under this Contract; and

WHEREAS, an emergency shelter is defined as any facility, the primary purpose of which is to provide temporary or transitional shelter for the homeless in general or for specific populations of the homeless; and

WHEREAS, "homelessness" is defined in FR–5333–F–02; and

WHEREAS, **Presbyterian Night Shelter** (UEI #PDPGPM7PJLR2) (the "Agency") has been designated as an emergency shelter for the homeless to receive funds allocated to Tarrant County by the U.S. Department of Housing and Urban Development;

Now, therefore, it is agreed as follows:

PURPOSE

This Agreement is entered into by and between **Tarrant County, Texas** (the "County") and the Agency for the purpose of providing safe, decent emergency shelter for the homeless, a Tarrant County priority consistent with the Tarrant County Consolidated Plan.

SCOPE OF SERVICES

From the proceeds awarded to the County under the **Emergency Solutions Grant Program** (the "Grant"), the County will reimburse the Agency a budgeted amount for providing emergency shelter for the homeless. The County will reimburse The Agency for emergency shelter facility operating expenses. Eligible expenses include utility costs of electric, gas and water services provided at the emergency shelter facility.

Approved Budget: The total one-year project budget for Emergency Solutions Grant Program # E-25-UC-48-0001 is **$253,814.00.** The County, upon submission of written requests from the Agency, will reimburse the Agency out of the total project budget for allowable expenditures up to, but not exceeding, the following specified amounts:

	Maximum Reimbursement
Emergency Shelter Operations Expenses	**$31,982.36**

The County will reimburse the Agency for this service upon timely submission of a monthly statement of expenditures. The County will only reimburse the Agency under this grant for approved eligible expenses as defined by 24 CFR Part 576 and 42 USC § 11375. The County will not reimburse the Agency for ineligible expenses or expenses incurred in excess of the maximum reimbursement amount under the total project budget.

Match Requirement: The Agency is responsible for a 100% one-to-one, dollar-for-dollar cash match payment for this grant.

TERM OF AGREEMENT

This Agreement shall be for a term of seven (7) months, commencing on December 1, 2025 and terminating June 30, 2026.

DOCUMENTATION, REPORTS AND AUDITS

The Agency must provide the following documentation to the County with each claim for reimbursement per 24 CFR 576 and 42 USC 11375:

1. Documentation of utility costs paid for the operation of the emergency shelter facility.
2. Reports detailing the unduplicated count and demographic data of homeless persons served must be entered into the Homeless Management Information System (HMIS) at least monthly. The County will check HMIS periodically to extract data. By accepting ESG funding from the County, the Agency authorizes the operators of the local HMIS system to share Agency data with the County for all programs that are touched by these source or matched funds.
3. Documentation of match funding (from sources other than any Emergency Solutions Grant) in the same amount as the amount claimed for reimbursement. Matching contributions may be obtained from any source, including any Federal source other than the ESG program, as well as state, local, and private sources. However, the following requirements apply to matching contributions from a Federal source of funds:

    a. The recipient must ensure the laws governing any funds to be used as matching contributions do not prohibit those funds from being used to match ESG funds.
    b. If ESG funds are used to satisfy the matching requirements of another Federal program, then funding from that program may not be used to satisfy the matching requirements under this Agreement.
    c. To be eligible for reimbursement, the Agency's documentation must include a description of the sources and amounts of such supplemental funds. Such reports and statements must be signed by a duly authorized agent of the Agency.

The County is under no obligation to disburse funds for expenditures that occurred more than thirty (30) days prior to the first day of the quarter for which documentation and reports are submitted.

The Agency agrees to cooperate fully with the County in monitoring the Agency. In this regard, the Agency agrees to keep records sufficient to document its compliance with all applicable laws, regulations and terms of this Agreement. All records shall be retained for five (5) years after the expenditure of all funds from the grant under which the program participant was served. Tarrant County, the U.S. Department of Housing and Urban Development ("HUD"), and the United States Comptroller General, or their representatives, shall have access to any books, documents, records and papers relating to the operations of the Agency under this contract for the purpose of audit, examination, exception and transcription at all reasonable hours at the offices of the Agency. A single audit of all the Agency's operations may be conducted upon demand of the County or an independent public accountant of the County's choice, in accordance with 2 CFR part 200.

If, as a result of any audit, it is determined that the agency has misused, misapplied or misappropriated all or any part of the grant funds described herein, the agency agrees to indemnify, hold harmless and defend the county and its officers, agents, servants and employees from and against any and all claims or suits resulting from such misuse, misapplication or misappropriation of such funds and to reimburse the county the amount of such monies so misused, misapplied or misappropriated.

The agency covenants and agrees that, in the event an audit is conducted by the county or on behalf of the county, which audit reveals any improper expenditures by the agency, its officers, agents, servants, employees and/or subcontractors, of the funds granted hereunder and such questioned costs are disallowed and become final under the procedures of the party by whom or on whose behalf said audit is conducted, then the amount of such disallowed cost, plus any sums the county is required to reimburse to HUD, shall constitute liquidated damages for the breach of that portion of the contract audited. In case such disallowed cost becomes final as herein set out, the agency agrees to pay the county said sum for the agency's failure to perform the duties, bear the liabilities and fulfill the obligations imposed upon it by this agreement.

CONFLICT OF INTEREST

Agency agrees to abide by the provisions of 2 CFR 200.318 with respect to conflicts of interest, and covenants that it presently has no personal or financial interest or benefit, and shall not acquire any personal or financial interest or benefit, direct or indirect, which would conflict in any manner or degree with the performance of services required under this agreement.

These conflict of interest provisions apply to any person who is an employee, agent, consultant, officer, or elected or appointed official of the county or of the sponsor, who exercises or has exercised any functions or responsibilities with respect to assisted activities or who is in a position to participate in a decision making process or gain inside information with regard to such activities during his or her tenure or for one year thereafter.

Participation by homeless individuals who also are participants under the program in policy or

decision making under 24 CFR 583.300(f) does not constitute a conflict of interest.

To the extent permitted by State or local law or regulations, such standards of conduct will provide for penalties, sanctions, or other disciplinary actions for violations of such standards by the subrecipients officers, employees, or agents, or by contractors or their agents.

Likewise, all procurement transactions shall be conducted in a manner to provide, to the maximum extent practical, open and free competition. Agency shall be alert to organizational conflicts of interest as well as noncompetitive practices among contractors that may restrict or eliminate competition or otherwise restrain trade. Awards shall be made to the bidder or offeror whose bid or offer is responsive to the solicitation and is most advantageous to the recipient, price, quality and other factors considered. The other factors shall include the bidder's or offeror's compliance with Section 3 of the Housing and Urban Development Act of 1968 (12 U.S.C. 1701u), hereafter referred to as "Section 3." Section 3 provides that, to the greatest extent feasible, and consistent with existing Federal, State, and local laws, and regulations, economic opportunities generated by certain HUD financial assistance shall clearly set forth all requirements that the bidder or offeror shall fulfill in order for the bid or offer to be evaluated by the recipient. Any and all bids or offers may be rejected when it is in the recipient's interest to do so.

Any violations of these conflict of interest provisions by Agency and/or its subrecipients or contractors shall render this contract voidable by Tarrant County.

CLIENT HEALTH TESTING

The Tarrant County homeless population is experiencing an increase in the number of persons who test positive for certain diseases, such as tuberculosis, syphilis and HIV. All agencies that contract with Tarrant County are encouraged to facilitate testing of all clients for these and any other disease(s) that may be considered a public health epidemic.

1295 COMPLIANCE

Agency acknowledges and agrees that it has fully, accurately, and completely disclosed all interested parties in the attached Form 1295, and has acknowledged the completeness of this disclosure by filing the Form 1295, attached as Exhibit A, with the Texas Ethics Commission as required by law.

GOVERNING LAW AND VENUE

Should any action, whether real or asserted, at law or in equity, arise out of the execution, performance, attempted performance or non-performance of this Agreement, venue for said action shall be in Tarrant County, Texas for state court actions and the Northern District of Texas, Fort Worth Division for federal court actions. This Agreement shall be governed by the laws of the State of Texas.

COMPLIANCE WITH LAWS

In providing the services required by this Agreement, Vendor must observe and comply with all applicable federal, state, and local statutes, ordinances, rules, and regulations, including, without limitation, workers' compensation laws, minimum and maximum salary and wage statutes and regulations, and non-discrimination laws and regulations. Vendor shall be responsible for ensuring its compliance with any laws and regulations applicable to its business, including maintaining any necessary licenses and permits.

APPLICABLE FEDERAL LAWS

The Agency agrees to comply with all Federal laws and regulations applicable to this agreement as administrated under HUD's rules and guidelines. Laws and regulations governing the Emergency Solutions Grant Program include the following but not limited to:

Title VI of Civil Rights Act of 1964 (42 U.S.C. 2000(d) *et seq.*);
Title VIII of Civil Rights Act of 1968 (42 U.S.C. 3601 *et seq.*);
Executive Orders 11063, 11246, as amended by 11375 and as supplemented by Department of Labor regulations (41 CFR Part 60);
Age Discrimination Act of 1975 (42 U.S.C. 6101 *et seq.*);
Section 3 of the Housing and Urban Development Act of 1968, as amended, 12 U.S.C. 1701(u);
Violence Against Women Act (VAWA) of 2013;
Imprisoned or Detained Individual Exclusion (42 U.S.C. 11302);
Lead-Based Paint Poisoning Prevention Act and 24 CFR Part 35;
Uniform Relocation Act and 49 CFR Part 24, subpart B and 24 CFR 576.408;
Conflicts of Interest at 24 CFR 576.404;
Environmental Review at 24 CFR 576.407(d);
and,
Uniform Administrative Requirements, Cost Principles, and Audit Requirements for Federal Awards 2 CFR part 200.

ANNUAL FISCAL CONDITION PRECEDENT

The parties acknowledge and agree that the Tarrant County, Texas is a governmental entity subject to an annual budgetary process and restrictions on spending in conformity with that process and its approved budget. The parties further agree that, notwithstanding any other language or provision herein to the contrary, if for any reason funds are not budgeted expressly for this agreement for the County's fiscal years subsequent to that in which funds for this Agreement are first allocated, the County may immediately and without penalty terminate this Agreement; provided, however, that in no event shall such a termination be effective earlier than the expiration of the last date for which funds have already been so allocated under an existing, finally approved budget.

NOTICES

Either party maintains the right to terminate this agreement with a thirty (30) day written notice by Registered or Certified Mail, Return Receipt Requested to the other party. All written notices to the County shall be addressed to:

Tarrant County Community Development Division
Attn: Janel Holt
2501 Parkview Drive, Suite 420
Fort Worth, Texas 76102

Written notice to the Agency shall be addressed to:

Presbyterian Night Shelter
Attn: Toby Owen
2400 Cypress
Fort Worth, Texas 76102

EXECUTION OF AGREEMENT

This agreement may be executed in one or more counterparts, each of which will be deemed to be an original copy of this agreement, and all of which, when taken together, shall be deemed to constitute one and the same agreement. The exchange of copies of this agreement and of signature pages by electronic transmission shall constitute effective execution and delivery of this agreement as to the parties and may be used in lieu of the original agreement for all purposes. Signatures of the parties transmitted or executed electronically shall be deemed to be their original signatures for any purpose whatsoever.

AGENCY



Authorized Representative

1.	Subrecipient Name	Presbyterian Night Shelter
2.	Subrecipient UEI Number	PDPGPM7PJLR2
3.	Federal Award Identification Number (FAIN)	E-25-UC-48-0001
4.	Federal Award Date	7/1/2025
5.	Subaward Period of Performance Start and End Date	12/1/2025-6/30/2026
6.	Amount of Federal Funds Obligated by This Action	TBD
7.	Total Amount of Federal Funds Obligated to the Subrecipient	$31,982.36
8.	Federal Award Project Description, as required by FFATA	ESG Program
9.	Name of Federal Awarding Agency	U.S. Department of Housing and Urban Development
10.	Pass-Through Entity	Tarrant County
11.	Contact Information for Awarding Official	Tarrant County 100 E. Weatherford Street Fort Worth, TX 76196-0001
12.	CFDA Number and Name	2025 Emergency Solutions Grant Program, 14.231
13.	Identification if the Award is R&D	N/A
14.	Indirect Cost Rate	N/A

CERTIFICATE OF INTERESTED PARTIES

FORM 1295

Complete Nos. 1 - 4 and 6 if there are interested parties.
Complete Nos. 1, 2, 3, 5, and 6 if there are no interested parties.

OFFICE USE ONLY
CERTIFICATION OF FILING

Certificate Number:
2025-1262118

Date Filed:
01/28/2025

Date Acknowledged:

1 Name of business entity filing form, and the city, state and country of the business entity's place of business.
Presbyterian Night Shelter
Fort Worth , TX United States

2 Name of governmental entity or state agency that is a party to the contract for which the form is being filed.
Tarrant County, Texas

3 Provide the identification number used by the governmental entity or state agency to track or identify the contract, and provide a description of the services, goods, or other property to be provided under the contract.
2025-2026 ESG - PNS
Homeless shelter utilities

4 Name of Interested Party	City, State, Country (place of business)	Nature of interest (check applicable)	
		Controlling	Intermediary

5 Check only if there is NO Interested Party. [X]

6 UNSWORN DECLARATION

My name is Toby Owen, and my date of birth is March 3, 1972.

My address is 2400 Cypress Street (street), Fort Worth (city), TX (state), 76102 (zip code), USA (country).

I declare under penalty of perjury that the foregoing is true and correct.

Executed in Tarrant County, State of Texas, on the 28 day of January (month), 20 25 (year).

Signature of authorized agent of contracting business entity
(Declarant)

STATE OF TEXAS §
§ **EMERGENCY SOLUTIONS GRANT PROGRAM**
§ **AGREEMENT**
COUNTY OF TARRANT §

WHEREAS, Tarrant County is an Urban Entitlement County and has received a grant through the 2025 Emergency Solutions Grant Program ("ESG") (CFDA No. 14.231) under the provisions in Title IV of the Stewart B. McKinney Homeless Act (**Grant E-25-UC-48-0001**); and

WHEREAS, Tarrant County has an approved Consolidated Plan outlining the needs of the homeless in Tarrant County, and

WHEREAS, the Tarrant County Community Development Department manages the Emergency Solutions Grant Program, and may perform the duties and responsibilities of Tarrant County under this Contract; and

WHEREAS, an emergency shelter is defined as any facility, the primary purpose of which is to provide temporary or transitional shelter for the homeless in general or for specific populations of the homeless; and

WHEREAS, "homelessness" is defined in FR–5333–F–02; and

WHEREAS, **SafeHaven of Tarrant County** (UEI #UHUERV1MAJ98) (the "Agency") has been designated as an emergency shelter for the homeless to receive funds allocated to Tarrant County by the U.S. Department of Housing and Urban Development;

Now, therefore, it is agreed as follows:

PURPOSE

This Agreement is entered into by and between **Tarrant County, Texas** (the "County") and the Agency for the purpose of providing safe, decent emergency shelter for the homeless, a Tarrant County priority consistent with the Tarrant County Consolidated Plan.

SCOPE OF SERVICES

From the proceeds awarded to the County under the **Emergency Solutions Grant Program** (the "Grant"), the County will reimburse the Agency a budgeted amount for providing emergency shelter for the homeless. The County will reimburse The Agency for emergency shelter facility operating expenses. Eligible expenses include utility costs of electric, gas and water services provided at the emergency shelter facility.

Approved Budget: The total one-year project budget for Emergency Solutions Grant Program # E-25-UC-48-0001 is **$253,814.00.** The County, upon submission of written requests from the Agency, will reimburse the Agency out of the total project budget for allowable expenditures up to, but not exceeding, the following specified amounts:

	Maximum Reimbursement
Emergency Shelter Operations Expenses	**$32,986.34**

The County will reimburse the Agency for this service upon timely submission of a monthly statement of expenditures. The County will only reimburse the Agency under this grant for approved eligible expenses as defined by 24 CFR Part 576 and 42 USC § 11375. The County will not reimburse the Agency for ineligible expenses or expenses incurred in excess of the maximum reimbursement amount under the total project budget.

Match Requirement: The Agency is responsible for a 100% one-to-one, dollar-for-dollar cash match payment for this grant.

TERM OF AGREEMENT

This Agreement shall be for a term of seven (7) months, commencing on December 1, 2025 and terminating June 30, 2026.

DOCUMENTATION, REPORTS AND AUDITS

The Agency must provide the following documentation to the County with each claim for reimbursement per 24 CFR 576 and 42 USC 11375:

1. Documentation of utility costs paid for the operation of the emergency shelter facility.
2. Reports detailing the unduplicated count and demographic data of homeless persons served must be entered into the Homeless Management Information System (HMIS) at least monthly. The County will check HMIS periodically to extract data. By accepting ESG funding from the County, the Agency authorizes the operators of the local HMIS system to share Agency data with the County for all programs that are touched by these source or matched funds.
3. Documentation of match funding (from sources other than any Emergency Solutions Grant) in the same amount as the amount claimed for reimbursement. Matching contributions may be obtained from any source, including any Federal source other than the ESG program, as well as state, local, and private sources. However, the following requirements apply to matching contributions from a Federal source of funds:

    a. The recipient must ensure the laws governing any funds to be used as matching contributions do not prohibit those funds from being used to match ESG funds.
    b. If ESG funds are used to satisfy the matching requirements of another Federal program, then funding from that program may not be used to satisfy the matching requirements under this Agreement.
    c. To be eligible for reimbursement, the Agency's documentation must include a description of the sources and amounts of such supplemental funds. Such reports and statements must be signed by a duly authorized agent of the Agency.

The County is under no obligation to disburse funds for expenditures that occurred more than thirty (30) days prior to the first day of the quarter for which documentation and reports are submitted.

The Agency agrees to cooperate fully with the County in monitoring the Agency. In this regard, the Agency agrees to keep records sufficient to document its compliance with all applicable laws, regulations and terms of this Agreement. All records shall be retained for five (5) years after the expenditure of all funds from the grant under which the program participant was served. Tarrant County, the U.S. Department of Housing and Urban Development ("HUD"), and the United States Comptroller General, or their representatives, shall have access to any books, documents, records and papers relating to the operations of the Agency under this contract for the purpose of audit, examination, exception and transcription at all reasonable hours at the offices of the Agency. A single audit of all the Agency's operations may be conducted upon demand of the County or an independent public accountant of the County's choice, in accordance with 2 CFR part 200.

If, as a result of any audit, it is determined that the agency has misused, misapplied or misappropriated all or any part of the grant funds described herein, the agency agrees to indemnify, hold harmless and defend the county and its officers, agents, servants and employees from and against any and all claims or suits resulting from such misuse, misapplication or misappropriation of such funds and to reimburse the county the amount of such monies so misused, misapplied or misappropriated.

The agency covenants and agrees that, in the event an audit is conducted by the county or on behalf of the county, which audit reveals any improper expenditures by the agency, its officers, agents, servants, employees and/or subcontractors, of the funds granted hereunder and such questioned costs are disallowed and become final under the procedures of the party by whom or on whose behalf said audit is conducted, then the amount of such disallowed cost, plus any sums the county is required to reimburse to HUD, shall constitute liquidated damages for the breach of that portion of the contract audited. In case such disallowed cost becomes final as herein set out, the agency agrees to pay the county said sum for the agency's failure to perform the duties, bear the liabilities and fulfill the obligations imposed upon it by this agreement.

CONFLICT OF INTEREST

Agency agrees to abide by the provisions of 2 CFR 200.318 with respect to conflicts of interest, and covenants that it presently has no personal or financial interest or benefit, and shall not acquire any personal or financial interest or benefit, direct or indirect, which would conflict in any manner or degree with the performance of services required under this agreement.

These conflict of interest provisions apply to any person who is an employee, agent, consultant, officer, or elected or appointed official of the county or of the sponsor, who exercises or has exercised any functions or responsibilities with respect to assisted activities or who is in a position to participate in a decision making process or gain inside information with regard to such activities during his or her tenure or for one year thereafter.

Participation by homeless individuals who also are participants under the program in policy or

decision making under 24 CFR 583.300(f) does not constitute a conflict of interest.

To the extent permitted by State or local law or regulations, such standards of conduct will provide for penalties, sanctions, or other disciplinary actions for violations of such standards by the subrecipients officers, employees, or agents, or by contractors or their agents.

Likewise, all procurement transactions shall be conducted in a manner to provide, to the maximum extent practical, open and free competition. Agency shall be alert to organizational conflicts of interest as well as noncompetitive practices among contractors that may restrict or eliminate competition or otherwise restrain trade. Awards shall be made to the bidder or offeror whose bid or offer is responsive to the solicitation and is most advantageous to the recipient, price, quality and other factors considered. The other factors shall include the bidder's or offeror's compliance with Section 3 of the Housing and Urban Development Act of 1968 (12 U.S.C. 1701u), hereafter referred to as "Section 3." Section 3 provides that, to the greatest extent feasible, and consistent with existing Federal, State, and local laws, and regulations, economic opportunities generated by certain HUD financial assistance shall clearly set forth all requirements that the bidder or offeror shall fulfill in order for the bid or offer to be evaluated by the recipient. Any and all bids or offers may be rejected when it is in the recipient's interest to do so.

Any violations of these conflict of interest provisions by Agency and/or its subrecipients or contractors shall render this contract voidable by Tarrant County.

CLIENT HEALTH TESTING

The Tarrant County homeless population is experiencing an increase in the number of persons who test positive for certain diseases, such as tuberculosis, syphilis and HIV. All agencies that contract with Tarrant County are encouraged to facilitate testing of all clients for these and any other disease(s) that may be considered a public health epidemic.

1295 COMPLIANCE

Agency acknowledges and agrees that it has fully, accurately, and completely disclosed all interested parties in the attached Form 1295, and has acknowledged the completeness of this disclosure by filing the Form 1295, attached as Exhibit A, with the Texas Ethics Commission as required by law.

GOVERNING LAW AND VENUE

Should any action, whether real or asserted, at law or in equity, arise out of the execution, performance, attempted performance or non-performance of this Agreement, venue for said action shall be in Tarrant County, Texas for state court actions and the Northern District of Texas, Fort Worth Division for federal court actions. This Agreement shall be governed by the laws of the State of Texas.

COMPLIANCE WITH LAWS

In providing the services required by this Agreement, Vendor must observe and comply with all applicable federal, state, and local statutes, ordinances, rules, and regulations, including, without limitation, workers' compensation laws, minimum and maximum salary and wage statutes and regulations, and non-discrimination laws and regulations. Vendor shall be responsible for ensuring its compliance with any laws and regulations applicable to its business, including maintaining any necessary licenses and permits.

APPLICABLE FEDERAL LAWS

The Agency agrees to comply with all Federal laws and regulations applicable to this agreement as administrated under HUD's rules and guidelines. Laws and regulations governing the Emergency Solutions Grant Program include the following but not limited to:

Title VI of Civil Rights Act of 1964 (42 U.S.C. 2000(d) *et seq.*);
Title VIII of Civil Rights Act of 1968 (42 U.S.C. 3601 *et seq.*);
Executive Orders 11063, 11246, as amended by 11375 and as supplemented by Department of Labor regulations (41 CFR Part 60);
Age Discrimination Act of 1975 (42 U.S.C. 6101 *et seq.*);
Section 3 of the Housing and Urban Development Act of 1968, as amended, 12 U.S.C. 1701(u);
Violence Against Women Act (VAWA) of 2013;
Imprisoned or Detained Individual Exclusion (42 U.S.C. 11302);
Lead-Based Paint Poisoning Prevention Act and 24 CFR Part 35;
Uniform Relocation Act and 49 CFR Part 24, subpart B and 24 CFR 576.408;
Conflicts of Interest at 24 CFR 576.404;
Environmental Review at 24 CFR 576.407(d);
and,
Uniform Administrative Requirements, Cost Principles, and Audit Requirements for Federal Awards 2 CFR part 200.

ANNUAL FISCAL CONDITION PRECEDENT

The parties acknowledge and agree that the Tarrant County, Texas is a governmental entity subject to an annual budgetary process and restrictions on spending in conformity with that process and its approved budget. The parties further agree that, notwithstanding any other language or provision herein to the contrary, if for any reason funds are not budgeted expressly for this agreement for the County's fiscal years subsequent to that in which funds for this Agreement are first allocated, the County may immediately and without penalty terminate this Agreement; provided, however, that in no event shall such a termination be effective earlier than the expiration of the last date for which funds have already been so allocated under an existing, finally approved budget.

NOTICES

Either party maintains the right to terminate this agreement with a thirty (30) day written notice by Registered or Certified Mail, Return Receipt Requested to the other party. All written notices to the County shall be addressed to:

Tarrant County Community Development Division
Attn: Janel Holt
2501 Parkview Drive, Suite 420
Fort Worth, Texas 76102

Written notice to the Agency shall be addressed to:

SafeHaven of Tarrant County
Attn: Kathryn Jacob
1010 N. Center Street
Arlington, Texas 76011

EXECUTION OF AGREEMENT

This agreement may be executed in one or more counterparts, each of which will be deemed to be an original copy of this agreement, and all of which, when taken together, shall be deemed to constitute one and the same agreement. The exchange of copies of this agreement and of signature pages by electronic transmission shall constitute effective execution and delivery of this agreement as to the parties and may be used in lieu of the original agreement for all purposes. Signatures of the parties transmitted or executed electronically shall be deemed to be their original signatures for any purpose whatsoever.

AGENCY



Authorized Representative

1.	Subrecipient Name	SafeHaven of Tarrant County
2.	Subrecipient UEI Number	UHUERV1MAJ98
3.	Federal Award Identification Number (FAIN)	E-25-UC-48-0001
4.	Federal Award Date	7/1/2025
5.	Subaward Period of Performance Start and End Date	12/1/2025-6/30/2026
6.	Amount of Federal Funds Obligated by This Action	TBD
7.	Total Amount of Federal Funds Obligated to the Subrecipient	$32,986.34
8.	Federal Award Project Description, as required by FFATA	ESG Program
9.	Name of Federal Awarding Agency	U.S. Department of Housing and Urban Development
10.	Pass-Through Entity	Tarrant County
11.	Contact Information for Awarding Official	Tarrant County 100 E. Weatherford Street Fort Worth, TX 76196-0001
12.	CFDA Number and Name	2025 Emergency Solutions Grant Program, 14.231
13.	Identification if the Award is R&D	N/A
14.	Indirect Cost Rate	N/A

CERTIFICATE OF INTERESTED PARTIES

FORM 1295

Complete Nos. 1 - 4 and 6 if there are interested parties.
Complete Nos. 1, 2, 3, 5, and 6 if there are no interested parties.

OFFICE USE ONLY
CERTIFICATION OF FILING

Certificate Number:
2025-1317263

Date Filed:
05/29/2025

Date Acknowledged:

1 Name of business entity filing form, and the city, state and country of the business entity's place of business.

SafeHaven of Tarrant County
Arlington, TX United States

2 Name of governmental entity or state agency that is a party to the contract for which the form is being filed.

Tarrant County, Texas

3 Provide the identification number used by the governmental entity or state agency to track or identify the contract, and provide a description of the services, goods, or other property to be provided under the contract.

2025 ESG Program
Emergency shelter for victims of domestic violence.

4 Name of Interested Party	City, State, Country (place of business)	Nature of interest (check applicable)	
		Controlling	Intermediary

5 Check only if there is NO Interested Party. [X]

6 UNSWORN DECLARATION

My name is Stephanie Storey, and my date of birth is January 26, 1970.

My address is 1010 N. Center Street (street), Arlington (city), TX (state), 76011 (zip code), USA (country).

I declare under penalty of perjury that the foregoing is true and correct.

Executed in Tarrant County, State of Texas, on the 29th day of May (month), 2025 (year).

Signature of authorized agent of contracting business entity
(Declarant)

STATE OF TEXAS §
§ **EMERGENCY SOLUTIONS GRANT PROGRAM**
§ **AGREEMENT**
COUNTY OF TARRANT §

WHEREAS, Tarrant County is an Urban Entitlement County and has received a grant through the 2025 Emergency Solutions Grant Program ("ESG") (CFDA No. 14.231) under the provisions in Title IV of the Stewart B. McKinney Homeless Act (**Grant E-25-UC-48-0001**); and

WHEREAS, Tarrant County has an approved Consolidated Plan outlining the needs of the homeless in Tarrant County, and

WHEREAS, the Tarrant County Community Development Department manages the Emergency Solutions Grant Program, and may perform the duties and responsibilities of Tarrant County under this Contract; and

WHEREAS, an emergency shelter is defined as any facility, the primary purpose of which is to provide temporary or transitional shelter for the homeless in general or for specific populations of the homeless; and

WHEREAS, "homelessness" is defined in FR–5333–F–02; and

WHEREAS, **The Salvation Army – Arlington** (UEI #E7TKB5ENTVM3) (the "Agency") has been designated as an emergency shelter for the homeless to receive funds allocated to Tarrant County by the U.S. Department of Housing and Urban Development;

Now, therefore, it is agreed as follows:

PURPOSE

This Agreement is entered into by and between **Tarrant County, Texas** (the "County") and the Agency for the purpose of providing safe, decent emergency shelter for the homeless, a Tarrant County priority consistent with the Tarrant County Consolidated Plan.

SCOPE OF SERVICES

From the proceeds awarded to the County under the **Emergency Solutions Grant Program** (the "Grant"), the County will reimburse the Agency a budgeted amount for providing emergency shelter for the homeless. The County will reimburse The Agency for emergency shelter facility operating expenses. Eligible expenses include utility costs of electric, gas and water services provided at the emergency shelter facility.

Approved Budget: The total one-year project budget for Emergency Solutions Grant Program # E-25-UC-48-0001 is **$253,814.00.** The County, upon submission of written requests from the Agency, will reimburse the Agency out of the total project budget for allowable expenditures up to, but not exceeding, the following specified amounts:

	Maximum Reimbursement
Emergency Shelter Operations Expenses	**$9,636.69**

The County will reimburse the Agency for this service upon timely submission of a monthly statement of expenditures. The County will only reimburse the Agency under this grant for approved eligible expenses as defined by 24 CFR Part 576 and 42 USC § 11375. The County will not reimburse the Agency for ineligible expenses or expenses incurred in excess of the maximum reimbursement amount under the total project budget.

Match Requirement: The Agency is responsible for a 100% one-to-one, dollar-for-dollar cash match payment for this grant.

TERM OF AGREEMENT

This Agreement shall be for a term of seven (7) months, commencing on December 1, 2025 and terminating June 30, 2026.

DOCUMENTATION, REPORTS AND AUDITS

The Agency must provide the following documentation to the County with each claim for reimbursement per 24 CFR 576 and 42 USC 11375:

1. Documentation of utility costs paid for the operation of the emergency shelter facility.
2. Reports detailing the unduplicated count and demographic data of homeless persons served must be entered into the Homeless Management Information System (HMIS) at least monthly. The County will check HMIS periodically to extract data. By accepting ESG funding from the County, the Agency authorizes the operators of the local HMIS system to share Agency data with the County for all programs that are touched by these source or matched funds.
3. Documentation of match funding (from sources other than any Emergency Solutions Grant) in the same amount as the amount claimed for reimbursement. Matching contributions may be obtained from any source, including any Federal source other than the ESG program, as well as state, local, and private sources. However, the following requirements apply to matching contributions from a Federal source of funds:

    a. The recipient must ensure the laws governing any funds to be used as matching contributions do not prohibit those funds from being used to match ESG funds.
    b. If ESG funds are used to satisfy the matching requirements of another Federal program, then funding from that program may not be used to satisfy the matching requirements under this Agreement.
    c. To be eligible for reimbursement, the Agency's documentation must include a description of the sources and amounts of such supplemental funds. Such reports and statements must be signed by a duly authorized agent of the Agency.

The County is under no obligation to disburse funds for expenditures that occurred more than thirty (30) days prior to the first day of the quarter for which documentation and reports are submitted.

The Agency agrees to cooperate fully with the County in monitoring the Agency. In this regard, the Agency agrees to keep records sufficient to document its compliance with all applicable laws, regulations and terms of this Agreement. All records shall be retained for five (5) years after the expenditure of all funds from the grant under which the program participant was served. Tarrant County, the U.S. Department of Housing and Urban Development ("HUD"), and the United States Comptroller General, or their representatives, shall have access to any books, documents, records and papers relating to the operations of the Agency under this contract for the purpose of audit, examination, exception and transcription at all reasonable hours at the offices of the Agency. A single audit of all the Agency's operations may be conducted upon demand of the County or an independent public accountant of the County's choice, in accordance with 2 CFR part 200.

If, as a result of any audit, it is determined that the agency has misused, misapplied or misappropriated all or any part of the grant funds described herein, the agency agrees to indemnify, hold harmless and defend the county and its officers, agents, servants and employees from and against any and all claims or suits resulting from such misuse, misapplication or misappropriation of such funds and to reimburse the county the amount of such monies so misused, misapplied or misappropriated.

The agency covenants and agrees that, in the event an audit is conducted by the county or on behalf of the county, which audit reveals any improper expenditures by the agency, its officers, agents, servants, employees and/or subcontractors, of the funds granted hereunder and such questioned costs are disallowed and become final under the procedures of the party by whom or on whose behalf said audit is conducted, then the amount of such disallowed cost, plus any sums the county is required to reimburse to HUD, shall constitute liquidated damages for the breach of that portion of the contract audited. In case such disallowed cost becomes final as herein set out, the agency agrees to pay the county said sum for the agency's failure to perform the duties, bear the liabilities and fulfill the obligations imposed upon it by this agreement.

CONFLICT OF INTEREST

Agency agrees to abide by the provisions of 2 CFR 200.318 with respect to conflicts of interest, and covenants that it presently has no personal or financial interest or benefit, and shall not acquire any personal or financial interest or benefit, direct or indirect, which would conflict in any manner or degree with the performance of services required under this agreement.

These conflict of interest provisions apply to any person who is an employee, agent, consultant, officer, or elected or appointed official of the county or of the sponsor, who exercises or has exercised any functions or responsibilities with respect to assisted activities or who is in a position to participate in a decision making process or gain inside information with regard to such activities during his or her tenure or for one year thereafter.

Participation by homeless individuals who also are participants under the program in policy or

decision making under 24 CFR 583.300(f) does not constitute a conflict of interest.

To the extent permitted by State or local law or regulations, such standards of conduct will provide for penalties, sanctions, or other disciplinary actions for violations of such standards by the subrecipients officers, employees, or agents, or by contractors or their agents.

Likewise, all procurement transactions shall be conducted in a manner to provide, to the maximum extent practical, open and free competition. Agency shall be alert to organizational conflicts of interest as well as noncompetitive practices among contractors that may restrict or eliminate competition or otherwise restrain trade. Awards shall be made to the bidder or offeror whose bid or offer is responsive to the solicitation and is most advantageous to the recipient, price, quality and other factors considered. The other factors shall include the bidder's or offeror's compliance with Section 3 of the Housing and Urban Development Act of 1968 (12 U.S.C. 1701u), hereafter referred to as "Section 3." Section 3 provides that, to the greatest extent feasible, and consistent with existing Federal, State, and local laws, and regulations, economic opportunities generated by certain HUD financial assistance shall clearly set forth all requirements that the bidder or offeror shall fulfill in order for the bid or offer to be evaluated by the recipient. Any and all bids or offers may be rejected when it is in the recipient's interest to do so.

Any violations of these conflict of interest provisions by Agency and/or its subrecipients or contractors shall render this contract voidable by Tarrant County.

CLIENT HEALTH TESTING

The Tarrant County homeless population is experiencing an increase in the number of persons who test positive for certain diseases, such as tuberculosis, syphilis and HIV. All agencies that contract with Tarrant County are encouraged to facilitate testing of all clients for these and any other disease(s) that may be considered a public health epidemic.

1295 COMPLIANCE

Agency acknowledges and agrees that it has fully, accurately, and completely disclosed all interested parties in the attached Form 1295, and has acknowledged the completeness of this disclosure by filing the Form 1295, attached as Exhibit A, with the Texas Ethics Commission as required by law.

GOVERNING LAW AND VENUE

Should any action, whether real or asserted, at law or in equity, arise out of the execution, performance, attempted performance or non-performance of this Agreement, venue for said action shall be in Tarrant County, Texas for state court actions and the Northern District of Texas, Fort Worth Division for federal court actions. This Agreement shall be governed by the laws of the State of Texas.

COMPLIANCE WITH LAWS

In providing the services required by this Agreement, Vendor must observe and comply with all applicable federal, state, and local statutes, ordinances, rules, and regulations, including, without limitation, workers' compensation laws, minimum and maximum salary and wage statutes and regulations, and non-discrimination laws and regulations. Vendor shall be responsible for ensuring its compliance with any laws and regulations applicable to its business, including maintaining any necessary licenses and permits.

APPLICABLE FEDERAL LAWS

The Agency agrees to comply with all Federal laws and regulations applicable to this agreement as administrated under HUD's rules and guidelines. Laws and regulations governing the Emergency Solutions Grant Program include the following but not limited to:

Title VI of Civil Rights Act of 1964 (42 U.S.C. 2000(d) *et seq.*);
Title VIII of Civil Rights Act of 1968 (42 U.S.C. 3601 *et seq.*);
Executive Orders 11063, 11246, as amended by 11375 and as supplemented by Department of Labor regulations (41 CFR Part 60);
Age Discrimination Act of 1975 (42 U.S.C. 6101 *et seq.*);
Section 3 of the Housing and Urban Development Act of 1968, as amended, 12 U.S.C. 1701(u);
Violence Against Women Act (VAWA) of 2013;
Imprisoned or Detained Individual Exclusion (42 U.S.C. 11302);
Lead-Based Paint Poisoning Prevention Act and 24 CFR Part 35;
Uniform Relocation Act and 49 CFR Part 24, subpart B and 24 CFR 576.408;
Conflicts of Interest at 24 CFR 576.404;
Environmental Review at 24 CFR 576.407(d);
and,
Uniform Administrative Requirements, Cost Principles, and Audit Requirements for Federal Awards 2 CFR part 200.

ANNUAL FISCAL CONDITION PRECEDENT

The parties acknowledge and agree that the Tarrant County, Texas is a governmental entity subject to an annual budgetary process and restrictions on spending in conformity with that process and its approved budget. The parties further agree that, notwithstanding any other language or provision herein to the contrary, if for any reason funds are not budgeted expressly for this agreement for the County's fiscal years subsequent to that in which funds for this Agreement are first allocated, the County may immediately and without penalty terminate this Agreement; provided, however, that in no event shall such a termination be effective earlier than the expiration of the last date for which funds have already been so allocated under an existing, finally approved budget.

NOTICES

Either party maintains the right to terminate this agreement with a thirty (30) day written notice by Registered or Certified Mail, Return Receipt Requested to the other party. All written notices to the County shall be addressed to:

Tarrant County Community Development Division
Attn: Janel Holt
2501 Parkview Drive, Suite 420
Fort Worth, Texas 76102

Written notice to the Agency shall be addressed to:

The Salvation Army - Arlington
Attn: Deborah Bullock
P. O. Box 2333
Fort Worth, Texas 76113

EXECUTION OF AGREEMENT

This agreement may be executed in one or more counterparts, each of which will be deemed to be an original copy of this agreement, and all of which, when taken together, shall be deemed to constitute one and the same agreement. The exchange of copies of this agreement and of signature pages by electronic transmission shall constitute effective execution and delivery of this agreement as to the parties and may be used in lieu of the original agreement for all purposes. Signatures of the parties transmitted or executed electronically shall be deemed to be their original signatures for any purpose whatsoever.

AGENCY



Authorized Representative

1.	Subrecipient Name	The Salvation Army - Arlington
2.	Subrecipient UEI Number	E7TKB5ENTVM3
3.	Federal Award Identification Number (FAIN)	E-25-UC-48-0001
4.	Federal Award Date	7/1/2025
5.	Subaward Period of Performance Start and End Date	12/1/2025-6/30/2026
6.	Amount of Federal Funds Obligated by This Action	TBD
7.	Total Amount of Federal Funds Obligated to the Subrecipient	$9,636.69
8.	Federal Award Project Description, as required by FFATA	ESG Program
9.	Name of Federal Awarding Agency	U.S. Department of Housing and Urban Development
10.	Pass-Through Entity	Tarrant County
11.	Contact Information for Awarding Official	Tarrant County 100 E. Weatherford Street Fort Worth, TX 76196-0001
12.	CFDA Number and Name	2025 Emergency Solutions Grant Program, 14.231
13.	Identification if the Award is R&D	N/A
14.	Indirect Cost Rate	N/A

CERTIFICATE OF INTERESTED PARTIES

FORM 1295

Complete Nos. 1 - 4 and 6 if there are interested parties.
Complete Nos. 1, 2, 3, 5, and 6 if there are no interested parties.

OFFICE USE ONLY
CERTIFICATION OF FILING

Certificate Number:
2025-1317618

Date Filed:
05/30/2025

Date Acknowledged:

1 Name of business entity filing form, and the city, state and country of the business entity's place of business.

Salvation Army GA, The Inc
Arlington, TX United States

2 Name of governmental entity or state agency that is a party to the contract for which the form is being filed.

Tarrant County Community Development Department

3 Provide the identification number used by the governmental entity or state agency to track or identify the contract, and provide a description of the services, goods, or other property to be provided under the contract.

E-25-UC-48-0001
HUD ESG Shelter Utilities

4 Name of Interested Party	City, State, Country (place of business)	Nature of interest (check applicable)	
		Controlling	Intermediary

5 Check only if there is NO Interested Party. [X]

6 UNSWORN DECLARATION

My name is Art Penhale, and my date of birth is 10/10/1958.

My address is 1221 River Bend Dr. (street), Dallas (city), TX (state), 75247 (zip code), USA (country).

I declare under penalty of perjury that the foregoing is true and correct.

Executed in Dallas County, State of Texas, on the 3rd day of June (month), 20 25 (year).

Signature of authorized agent of contracting business entity
(Declarant)

STATE OF TEXAS §
§ **EMERGENCY SOLUTIONS GRANT PROGRAM**
§ **AGREEMENT**
COUNTY OF TARRANT §

WHEREAS, Tarrant County is an Urban Entitlement County and has received a grant through the 2025 Emergency Solutions Grant Program ("ESG") (CFDA No. 14.231) under the provisions in Title IV of the Stewart B. McKinney Homeless Act (**Grant E-25-UC-48-0001**); and

WHEREAS, Tarrant County has an approved Consolidated Plan outlining the needs of the homeless in Tarrant County, and

WHEREAS, the Tarrant County Community Development Department manages the Emergency Solutions Grant Program, and may perform the duties and responsibilities of Tarrant County under this Contract; and

WHEREAS, an emergency shelter is defined as any facility, the primary purpose of which is to provide temporary or transitional shelter for the homeless in general or for specific populations of the homeless; and

WHEREAS, "homelessness" is defined in FR–5333–F–02; and

WHEREAS, **The Salvation Army - Fort Worth Mabee Center** (UEI #HGC7JHH1UVP7) (the "Agency") has been designated as an emergency shelter for the homeless to receive funds allocated to Tarrant County by the U.S. Department of Housing and Urban Development;

Now, therefore, it is agreed as follows:

PURPOSE

This Agreement is entered into by and between **Tarrant County, Texas** (the "County") and the Agency for the purpose of providing safe, decent emergency shelter for the homeless, a Tarrant County priority consistent with the Tarrant County Consolidated Plan.

SCOPE OF SERVICES

From the proceeds awarded to the County under the **Emergency Solutions Grant Program** (the "Grant"), the County will reimburse the Agency a budgeted amount for providing emergency shelter for the homeless. The County will reimburse The Agency for emergency shelter facility operating expenses. Eligible expenses include utility costs of electric, gas and water services provided at the emergency shelter facility.

Approved Budget: The total one-year project budget for Emergency Solutions Grant Program # E-25-UC-48-0001 is **$253,814.00.** The County, upon submission of written requests from the Agency, will reimburse the Agency out of the total project budget for allowable expenditures up to, but not exceeding, the following specified amounts:

	Maximum Reimbursement
Emergency Shelter Operations Expenses	**$14,100.34**

The County will reimburse the Agency for this service upon timely submission of a monthly statement of expenditures. The County will only reimburse the Agency under this grant for approved eligible expenses as defined by 24 CFR Part 576 and 42 USC § 11375. The County will not reimburse the Agency for ineligible expenses or expenses incurred in excess of the maximum reimbursement amount under the total project budget.

Match Requirement: The Agency is responsible for a 100% one-to-one, dollar-for-dollar cash match payment for this grant.

TERM OF AGREEMENT

This Agreement shall be for a term of seven (7) months, commencing on December 1, 2025 and terminating June 30, 2026.

DOCUMENTATION, REPORTS AND AUDITS

The Agency must provide the following documentation to the County with each claim for reimbursement per 24 CFR 576 and 42 USC 11375:

1. Documentation of utility costs paid for the operation of the emergency shelter facility.
2. Reports detailing the unduplicated count and demographic data of homeless persons served must be entered into the Homeless Management Information System (HMIS) at least monthly. The County will check HMIS periodically to extract data. By accepting ESG funding from the County, the Agency authorizes the operators of the local HMIS system to share Agency data with the County for all programs that are touched by these source or matched funds.
3. Documentation of match funding (from sources other than any Emergency Solutions Grant) in the same amount as the amount claimed for reimbursement. Matching contributions may be obtained from any source, including any Federal source other than the ESG program, as well as state, local, and private sources. However, the following requirements apply to matching contributions from a Federal source of funds:

    a. The recipient must ensure the laws governing any funds to be used as matching contributions do not prohibit those funds from being used to match ESG funds.
    b. If ESG funds are used to satisfy the matching requirements of another Federal program, then funding from that program may not be used to satisfy the matching requirements under this Agreement.
    c. To be eligible for reimbursement, the Agency's documentation must include a description of the sources and amounts of such supplemental funds. Such reports and statements must be signed by a duly authorized agent of the Agency.

The County is under no obligation to disburse funds for expenditures that occurred more than thirty (30) days prior to the first day of the quarter for which documentation and reports are submitted.

The Agency agrees to cooperate fully with the County in monitoring the Agency. In this regard, the Agency agrees to keep records sufficient to document its compliance with all applicable laws, regulations and terms of this Agreement. All records shall be retained for five (5) years after the expenditure of all funds from the grant under which the program participant was served. Tarrant County, the U.S. Department of Housing and Urban Development ("HUD"), and the United States Comptroller General, or their representatives, shall have access to any books, documents, records and papers relating to the operations of the Agency under this contract for the purpose of audit, examination, exception and transcription at all reasonable hours at the offices of the Agency. A single audit of all the Agency's operations may be conducted upon demand of the County or an independent public accountant of the County's choice, in accordance with 2 CFR part 200.

If, as a result of any audit, it is determined that the agency has misused, misapplied or misappropriated all or any part of the grant funds described herein, the agency agrees to indemnify, hold harmless and defend the county and its officers, agents, servants and employees from and against any and all claims or suits resulting from such misuse, misapplication or misappropriation of such funds and to reimburse the county the amount of such monies so misused, misapplied or misappropriated.

The agency covenants and agrees that, in the event an audit is conducted by the county or on behalf of the county, which audit reveals any improper expenditures by the agency, its officers, agents, servants, employees and/or subcontractors, of the funds granted hereunder and such questioned costs are disallowed and become final under the procedures of the party by whom or on whose behalf said audit is conducted, then the amount of such disallowed cost, plus any sums the county is required to reimburse to HUD, shall constitute liquidated damages for the breach of that portion of the contract audited. In case such disallowed cost becomes final as herein set out, the agency agrees to pay the county said sum for the agency's failure to perform the duties, bear the liabilities and fulfill the obligations imposed upon it by this agreement.

CONFLICT OF INTEREST

Agency agrees to abide by the provisions of 2 CFR 200.318 with respect to conflicts of interest, and covenants that it presently has no personal or financial interest or benefit, and shall not acquire any personal or financial interest or benefit, direct or indirect, which would conflict in any manner or degree with the performance of services required under this agreement.

These conflict of interest provisions apply to any person who is an employee, agent, consultant, officer, or elected or appointed official of the county or of the sponsor, who exercises or has exercised any functions or responsibilities with respect to assisted activities or who is in a position to participate in a decision making process or gain inside information with regard to such activities during his or her tenure or for one year thereafter.

Participation by homeless individuals who also are participants under the program in policy or

decision making under 24 CFR 583.300(f) does not constitute a conflict of interest.

To the extent permitted by State or local law or regulations, such standards of conduct will provide for penalties, sanctions, or other disciplinary actions for violations of such standards by the subrecipients officers, employees, or agents, or by contractors or their agents.

Likewise, all procurement transactions shall be conducted in a manner to provide, to the maximum extent practical, open and free competition. Agency shall be alert to organizational conflicts of interest as well as noncompetitive practices among contractors that may restrict or eliminate competition or otherwise restrain trade. Awards shall be made to the bidder or offeror whose bid or offer is responsive to the solicitation and is most advantageous to the recipient, price, quality and other factors considered. The other factors shall include the bidder's or offeror's compliance with Section 3 of the Housing and Urban Development Act of 1968 (12 U.S.C. 1701u), hereafter referred to as "Section 3." Section 3 provides that, to the greatest extent feasible, and consistent with existing Federal, State, and local laws, and regulations, economic opportunities generated by certain HUD financial assistance shall clearly set forth all requirements that the bidder or offeror shall fulfill in order for the bid or offer to be evaluated by the recipient. Any and all bids or offers may be rejected when it is in the recipient's interest to do so.

Any violations of these conflict of interest provisions by Agency and/or its subrecipients or contractors shall render this contract voidable by Tarrant County.

CLIENT HEALTH TESTING

The Tarrant County homeless population is experiencing an increase in the number of persons who test positive for certain diseases, such as tuberculosis, syphilis and HIV. All agencies that contract with Tarrant County are encouraged to facilitate testing of all clients for these and any other disease(s) that may be considered a public health epidemic.

1295 COMPLIANCE

Agency acknowledges and agrees that it has fully, accurately, and completely disclosed all interested parties in the attached Form 1295, and has acknowledged the completeness of this disclosure by filing the Form 1295, attached as Exhibit A, with the Texas Ethics Commission as required by law.

GOVERNING LAW AND VENUE

Should any action, whether real or asserted, at law or in equity, arise out of the execution, performance, attempted performance or non-performance of this Agreement, venue for said action shall be in Tarrant County, Texas for state court actions and the Northern District of Texas, Fort Worth Division for federal court actions. This Agreement shall be governed by the laws of the State of Texas.

COMPLIANCE WITH LAWS

In providing the services required by this Agreement, Vendor must observe and comply with all applicable federal, state, and local statutes, ordinances, rules, and regulations, including, without limitation, workers' compensation laws, minimum and maximum salary and wage statutes and regulations, and non-discrimination laws and regulations. Vendor shall be responsible for ensuring its compliance with any laws and regulations applicable to its business, including maintaining any necessary licenses and permits.

APPLICABLE FEDERAL LAWS

The Agency agrees to comply with all Federal laws and regulations applicable to this agreement as administrated under HUD's rules and guidelines. Laws and regulations governing the Emergency Solutions Grant Program include the following but not limited to:

Title VI of Civil Rights Act of 1964 (42 U.S.C. 2000(d) *et seq.*);
Title VIII of Civil Rights Act of 1968 (42 U.S.C. 3601 *et seq.*);
Executive Orders 11063, 11246, as amended by 11375 and as supplemented by Department of Labor regulations (41 CFR Part 60);
Age Discrimination Act of 1975 (42 U.S.C. 6101 *et seq.*);
Section 3 of the Housing and Urban Development Act of 1968, as amended, 12 U.S.C. 1701(u);
Violence Against Women Act (VAWA) of 2013;
Imprisoned or Detained Individual Exclusion (42 U.S.C. 11302);
Lead-Based Paint Poisoning Prevention Act and 24 CFR Part 35;
Uniform Relocation Act and 49 CFR Part 24, subpart B and 24 CFR 576.408;
Conflicts of Interest at 24 CFR 576.404;
Environmental Review at 24 CFR 576.407(d);
and,
Uniform Administrative Requirements, Cost Principles, and Audit Requirements for Federal Awards 2 CFR part 200.

ANNUAL FISCAL CONDITION PRECEDENT

The parties acknowledge and agree that the Tarrant County, Texas is a governmental entity subject to an annual budgetary process and restrictions on spending in conformity with that process and its approved budget. The parties further agree that, notwithstanding any other language or provision herein to the contrary, if for any reason funds are not budgeted expressly for this agreement for the County's fiscal years subsequent to that in which funds for this Agreement are first allocated, the County may immediately and without penalty terminate this Agreement; provided, however, that in no event shall such a termination be effective earlier than the expiration of the last date for which funds have already been so allocated under an existing, finally approved budget.

NOTICES

Either party maintains the right to terminate this agreement with a thirty (30) day written notice by Registered or Certified Mail, Return Receipt Requested to the other party. All written notices to the County shall be addressed to:

Tarrant County Community Development Division
Attn: Janel Holt
2501 Parkview Drive, Suite 420
Fort Worth, Texas 76102

Written notice to the Agency shall be addressed to:

The Salvation Army - Fort Worth Mabee Center
Attn: Deborah Bullock
P. O. Box 2333
Fort Worth, Texas 76113

EXECUTION OF AGREEMENT

This agreement may be executed in one or more counterparts, each of which will be deemed to be an original copy of this agreement, and all of which, when taken together, shall be deemed to constitute one and the same agreement. The exchange of copies of this agreement and of signature pages by electronic transmission shall constitute effective execution and delivery of this agreement as to the parties and may be used in lieu of the original agreement for all purposes. Signatures of the parties transmitted or executed electronically shall be deemed to be their original signatures for any purpose whatsoever.

AGENCY

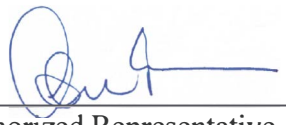

Authorized Representative

1.	Subrecipient Name	The Salvation Army – Fort Worth Mabee Center
2.	Subrecipient UEI Number	HGC7JHH1UVP7
3.	Federal Award Identification Number (FAIN)	E-25-UC-48-0001
4.	Federal Award Date	7/1/2025
5.	Subaward Period of Performance Start and End Date	12/1/2025-6/30/2026
6.	Amount of Federal Funds Obligated by This Action	TBD
7.	Total Amount of Federal Funds Obligated to the Subrecipient	$14,100.34
8.	Federal Award Project Description, as required by FFATA	ESG Program
9.	Name of Federal Awarding Agency	U.S. Department of Housing and Urban Development
10.	Pass-Through Entity	Tarrant County
11.	Contact Information for Awarding Official	Tarrant County 100 E. Weatherford Street Fort Worth, TX 76196-0001
12.	CFDA Number and Name	2025 Emergency Solutions Grant Program, 14.231
13.	Identification if the Award is R&D	N/A
14.	Indirect Cost Rate	N/A

CERTIFICATE OF INTERESTED PARTIES

FORM 1295

Complete Nos. 1 - 4 and 6 if there are interested parties.
Complete Nos. 1, 2, 3, 5, and 6 if there are no interested parties.

OFFICE USE ONLY
CERTIFICATION OF FILING

Certificate Number:
2025-1317615

Date Filed:
05/30/2025

Date Acknowledged:

1 Name of business entity filing form, and the city, state and country of the business entity's place of business.

Salvation Army
Fort Worth, TX United States

2 Name of governmental entity or state agency that is a party to the contract for which the form is being filed.

Tarrant County Community Development Department

3 Provide the identification number used by the governmental entity or state agency to track or identify the contract, and provide a description of the services, goods, or other property to be provided under the contract.

E-25-UC-48-0001
HUD ESG Shelter Utilities Grant

4 Name of Interested Party	City, State, Country (place of business)	Nature of interest (check applicable)	
		Controlling	Intermediary

5 Check only if there is NO Interested Party. [X]

6 UNSWORN DECLARATION

My name is Art Penhale, and my date of birth is 10/10/1958.

My address is 1221 River Bend Dr (street), Dallas (city), TX (state), 75247 (zip code), USA (country).

I declare under penalty of perjury that the foregoing is true and correct.

Executed in Dallas County, State of Texas, on the 3rd day of June (month), 20 25 (year).

Signature of authorized agent of contracting business entity
(Declarant)

STATE OF TEXAS §
§ **EMERGENCY SOLUTIONS GRANT PROGRAM**
§ **AGREEMENT**
COUNTY OF TARRANT §

WHEREAS, Tarrant County is an Urban Entitlement County and has received a grant through the 2025 Emergency Solutions Grant Program ("ESG") (CFDA No. 14.231) under the provisions in Title IV of the Stewart B. McKinney Homeless Act **(Grant E-25-UC-48-0001)**; and

WHEREAS, Tarrant County has an approved Consolidated Plan outlining the needs of the homeless in Tarrant County, and

WHEREAS, the Tarrant County Community Development Department manages the Emergency Solutions Grant Program, and may perform the duties and responsibilities of Tarrant County under this Contract; and

WHEREAS, an emergency shelter is defined as any facility, the primary purpose of which is to provide temporary or transitional shelter for the homeless in general or for specific populations of the homeless; and

WHEREAS, "homelessness" is defined in FR–5333–F–02; and

WHEREAS, **True Worth Place** (UEI #KEWTV16GNC54) (the "Agency") has been designated as an emergency shelter for the homeless to receive funds allocated to Tarrant County by the U.S. Department of Housing and Urban Development;

Now, therefore, it is agreed as follows:

PURPOSE

This Agreement is entered into by and between **Tarrant County, Texas** (the "County") and the Agency for the purpose of providing safe, decent emergency shelter for the homeless, a Tarrant County priority consistent with the Tarrant County Consolidated Plan.

SCOPE OF SERVICES

From the proceeds awarded to the County under the **Emergency Solutions Grant Program** (the "Grant"), the County will reimburse the Agency a budgeted amount for providing emergency shelter for the homeless. The County will reimburse The Agency for emergency shelter facility operating expenses. Eligible expenses include utility costs of electric, gas and water services provided at the emergency shelter facility.

Approved Budget: The total one-year project budget for Emergency Solutions Grant Program # E-25-UC-48-0001 is **$253,814.00.** The County, upon submission of written requests from the Agency, will reimburse the Agency out of the total project budget for allowable expenditures up to, but not exceeding, the following specified amounts:

	Maximum Reimbursement
Emergency Shelter Operations Expenses	**$18,914.37**

The County will reimburse the Agency for this service upon timely submission of a monthly statement of expenditures. The County will only reimburse the Agency under this grant for approved eligible expenses as defined by 24 CFR Part 576 and 42 USC § 11375. The County will not reimburse the Agency for ineligible expenses or expenses incurred in excess of the maximum reimbursement amount under the total project budget.

Match Requirement: The Agency is responsible for a 100% one-to-one, dollar-for-dollar cash match payment for this grant.

TERM OF AGREEMENT

This Agreement shall be for a term of seven (7) months, commencing on December 1, 2025 and terminating June 30, 2026.

DOCUMENTATION, REPORTS AND AUDITS

The Agency must provide the following documentation to the County with each claim for reimbursement per 24 CFR 576 and 42 USC 11375:

1. Documentation of utility costs paid for the operation of the emergency shelter facility.
2. Reports detailing the unduplicated count and demographic data of homeless persons served must be entered into the Homeless Management Information System (HMIS) at least monthly. The County will check HMIS periodically to extract data. By accepting ESG funding from the County, the Agency authorizes the operators of the local HMIS system to share Agency data with the County for all programs that are touched by these source or matched funds.
3. Documentation of match funding (from sources other than any Emergency Solutions Grant) in the same amount as the amount claimed for reimbursement. Matching contributions may be obtained from any source, including any Federal source other than the ESG program, as well as state, local, and private sources. However, the following requirements apply to matching contributions from a Federal source of funds:

    a. The recipient must ensure the laws governing any funds to be used as matching contributions do not prohibit those funds from being used to match ESG funds.
    b. If ESG funds are used to satisfy the matching requirements of another Federal program, then funding from that program may not be used to satisfy the matching requirements under this Agreement.
    c. To be eligible for reimbursement, the Agency's documentation must include a description of the sources and amounts of such supplemental funds. Such reports and statements must be signed by a duly authorized agent of the Agency.

The County is under no obligation to disburse funds for expenditures that occurred more than thirty (30) days prior to the first day of the quarter for which documentation and reports are submitted.

The Agency agrees to cooperate fully with the County in monitoring the Agency. In this regard, the Agency agrees to keep records sufficient to document its compliance with all applicable laws, regulations and terms of this Agreement. All records shall be retained for five (5) years after the expenditure of all funds from the grant under which the program participant was served. Tarrant County, the U.S. Department of Housing and Urban Development ("HUD"), and the United States Comptroller General, or their representatives, shall have access to any books, documents, records and papers relating to the operations of the Agency under this contract for the purpose of audit, examination, exception and transcription at all reasonable hours at the offices of the Agency. A single audit of all the Agency's operations may be conducted upon demand of the County or an independent public accountant of the County's choice, in accordance with 2 CFR part 200.

If, as a result of any audit, it is determined that the agency has misused, misapplied or misappropriated all or any part of the grant funds described herein, the agency agrees to indemnify, hold harmless and defend the county and its officers, agents, servants and employees from and against any and all claims or suits resulting from such misuse, misapplication or misappropriation of such funds and to reimburse the county the amount of such monies so misused, misapplied or misappropriated.

The agency covenants and agrees that, in the event an audit is conducted by the county or on behalf of the county, which audit reveals any improper expenditures by the agency, its officers, agents, servants, employees and/or subcontractors, of the funds granted hereunder and such questioned costs are disallowed and become final under the procedures of the party by whom or on whose behalf said audit is conducted, then the amount of such disallowed cost, plus any sums the county is required to reimburse to HUD, shall constitute liquidated damages for the breach of that portion of the contract audited. In case such disallowed cost becomes final as herein set out, the agency agrees to pay the county said sum for the agency's failure to perform the duties, bear the liabilities and fulfill the obligations imposed upon it by this agreement.

CONFLICT OF INTEREST

Agency agrees to abide by the provisions of 2 CFR 200.318 with respect to conflicts of interest, and covenants that it presently has no personal or financial interest or benefit, and shall not acquire any personal or financial interest or benefit, direct or indirect, which would conflict in any manner or degree with the performance of services required under this agreement.

These conflict of interest provisions apply to any person who is an employee, agent, consultant, officer, or elected or appointed official of the county or of the sponsor, who exercises or has exercised any functions or responsibilities with respect to assisted activities or who is in a position to participate in a decision making process or gain inside information with regard to such activities during his or her tenure or for one year thereafter.

Participation by homeless individuals who also are participants under the program in policy or

decision making under 24 CFR 583.300(f) does not constitute a conflict of interest.

To the extent permitted by State or local law or regulations, such standards of conduct will provide for penalties, sanctions, or other disciplinary actions for violations of such standards by the subrecipients officers, employees, or agents, or by contractors or their agents.

Likewise, all procurement transactions shall be conducted in a manner to provide, to the maximum extent practical, open and free competition. Agency shall be alert to organizational conflicts of interest as well as noncompetitive practices among contractors that may restrict or eliminate competition or otherwise restrain trade. Awards shall be made to the bidder or offeror whose bid or offer is responsive to the solicitation and is most advantageous to the recipient, price, quality and other factors considered. The other factors shall include the bidder's or offeror's compliance with Section 3 of the Housing and Urban Development Act of 1968 (12 U.S.C. 1701u), hereafter referred to as "Section 3." Section 3 provides that, to the greatest extent feasible, and consistent with existing Federal, State, and local laws, and regulations, economic opportunities generated by certain HUD financial assistance shall clearly set forth all requirements that the bidder or offeror shall fulfill in order for the bid or offer to be evaluated by the recipient. Any and all bids or offers may be rejected when it is in the recipient's interest to do so.

Any violations of these conflict of interest provisions by Agency and/or its subrecipients or contractors shall render this contract voidable by Tarrant County.

CLIENT HEALTH TESTING

The Tarrant County homeless population is experiencing an increase in the number of persons who test positive for certain diseases, such as tuberculosis, syphilis and HIV. All agencies that contract with Tarrant County are encouraged to facilitate testing of all clients for these and any other disease(s) that may be considered a public health epidemic.

1295 COMPLIANCE

Agency acknowledges and agrees that it has fully, accurately, and completely disclosed all interested parties in the attached Form 1295, and has acknowledged the completeness of this disclosure by filing the Form 1295, attached as Exhibit A, with the Texas Ethics Commission as required by law.

GOVERNING LAW AND VENUE

Should any action, whether real or asserted, at law or in equity, arise out of the execution, performance, attempted performance or non-performance of this Agreement, venue for said action shall be in Tarrant County, Texas for state court actions and the Northern District of Texas, Fort Worth Division for federal court actions. This Agreement shall be governed by the laws of the State of Texas.

COMPLIANCE WITH LAWS

In providing the services required by this Agreement, Vendor must observe and comply with all applicable federal, state, and local statutes, ordinances, rules, and regulations, including, without limitation, workers' compensation laws, minimum and maximum salary and wage statutes and regulations, and non-discrimination laws and regulations. Vendor shall be responsible for ensuring its compliance with any laws and regulations applicable to its business, including maintaining any necessary licenses and permits.

APPLICABLE FEDERAL LAWS

The Agency agrees to comply with all Federal laws and regulations applicable to this agreement as administrated under HUD's rules and guidelines. Laws and regulations governing the Emergency Solutions Grant Program include the following but not limited to:

Title VI of Civil Rights Act of 1964 (42 U.S.C. 2000(d) *et seq.*);
Title VIII of Civil Rights Act of 1968 (42 U.S.C. 3601 *et seq.*);
Executive Orders 11063, 11246, as amended by 11375 and as supplemented by Department of Labor regulations (41 CFR Part 60);
Age Discrimination Act of 1975 (42 U.S.C. 6101 *et seq.*);
Section 3 of the Housing and Urban Development Act of 1968, as amended, 12 U.S.C. 1701(u);
Violence Against Women Act (VAWA) of 2013;
Imprisoned or Detained Individual Exclusion (42 U.S.C. 11302);
Lead-Based Paint Poisoning Prevention Act and 24 CFR Part 35;
Uniform Relocation Act and 49 CFR Part 24, subpart B and 24 CFR 576.408;
Conflicts of Interest at 24 CFR 576.404;
Environmental Review at 24 CFR 576.407(d);
and,
Uniform Administrative Requirements, Cost Principles, and Audit Requirements for Federal Awards 2 CFR part 200.

ANNUAL FISCAL CONDITION PRECEDENT

The parties acknowledge and agree that the Tarrant County, Texas is a governmental entity subject to an annual budgetary process and restrictions on spending in conformity with that process and its approved budget. The parties further agree that, notwithstanding any other language or provision herein to the contrary, if for any reason funds are not budgeted expressly for this agreement for the County's fiscal years subsequent to that in which funds for this Agreement are first allocated, the County may immediately and without penalty terminate this Agreement; provided, however, that in no event shall such a termination be effective earlier than the expiration of the last date for which funds have already been so allocated under an existing, finally approved budget.

NOTICES

Either party maintains the right to terminate this agreement with a thirty (30) day written notice by Registered or Certified Mail, Return Receipt Requested to the other party. All written notices to the County shall be addressed to:

Tarrant County Community Development Division
Attn: Janel Holt
2501 Parkview Drive, Suite 420
Fort Worth, Texas 76102

Written notice to the Agency shall be addressed to:

True Worth Place
Attn: Toby Owen
1513 E. Presidio
Fort Worth, TX 76102

EXECUTION OF AGREEMENT

This agreement may be executed in one or more counterparts, each of which will be deemed to be an original copy of this agreement, and all of which, when taken together, shall be deemed to constitute one and the same agreement. The exchange of copies of this agreement and of signature pages by electronic transmission shall constitute effective execution and delivery of this agreement as to the parties and may be used in lieu of the original agreement for all purposes. Signatures of the parties transmitted or executed electronically shall be deemed to be their original signatures for any purpose whatsoever.

AGENCY



Authorized Representative

1.	Subrecipient Name	True Worth Place
2.	Subrecipient UEI Number	KEWTV16GNC54
3.	Federal Award Identification Number (FAIN)	E-25-UC-48-0001
4.	Federal Award Date	7/1/2025
5.	Subaward Period of Performance Start and End Date	12/1/2025-6/30/2026
6.	Amount of Federal Funds Obligated by This Action	TBD
7.	Total Amount of Federal Funds Obligated to the Subrecipient	$18,914.37
8.	Federal Award Project Description, as required by FFATA	ESG Program
9.	Name of Federal Awarding Agency	U.S. Department of Housing and Urban Development
10.	Pass-Through Entity	Tarrant County
11.	Contact Information for Awarding Official	Tarrant County 100 E. Weatherford Street Fort Worth, TX 76196-0001
12.	CFDA Number and Name	2025 Emergency Solutions Grant Program, 14.231
13.	Identification if the Award is R&D	N/A
14.	Indirect Cost Rate	N/A

CERTIFICATE OF INTERESTED PARTIES

FORM 1295

Complete Nos. 1 - 4 and 6 if there are interested parties.
Complete Nos. 1, 2, 3, 5, and 6 if there are no interested parties.

OFFICE USE ONLY
CERTIFICATION OF FILING

Certificate Number:
2025-1262119

Date Filed:
01/28/2025

Date Acknowledged:

1 Name of business entity filing form, and the city, state and country of the business entity's place of business.
Lighthouse for The Homeless dba True Worth Place
Fort Worth, TX United States

2 Name of governmental entity or state agency that is a party to the contract for which the form is being filed.
Tarrant County, Texas

3 Provide the identification number used by the governmental entity or state agency to track or identify the contract, and provide a description of the services, goods, or other property to be provided under the contract.
2025-2026 ESG - TWP
Homeless shelter utilities

4 Name of Interested Party	City, State, Country (place of business)	Nature of interest (check applicable)	
		Controlling	Intermediary

5 Check only if there is NO Interested Party. [X]

6 UNSWORN DECLARATION

My name is Toby Owen, and my date of birth is March 3, 1972.

My address is 2400 Cypress (street), Fort Worth (city), TX (state), 76102 (zip code), USA (country).

I declare under penalty of perjury that the foregoing is true and correct.

Executed in Tarrant County, State of Texas, on the 28 day of January (month), 20 25 (year).

Signature of authorized agent of contracting business entity
(Declarant)

TARRANT COUNTY
COMMISSIONERS COURT COMMUNICATION

Court Date: December 9, 2025	**Court Order #:**	**Page:** 1 of 5
Department: Community Development	**Prepared By:** Wren Davis	**Approved By:** James A. McClinton, Director

SUBJECT:

Consideration of Change Order No. 1 to the Construction Contract between Tarrant County and Leetech Services LLC for the City of Blue Mound, Texas 50th Year Community Development Block Grant Project

*****CONSENT AGENDA *****

COMMISSIONERS COURT ACTION REQUESTED

It is requested that the Commissioners Court consider approving Change Order No. 1 to the construction contract with Leetech Services LLC in the amount of ($10,315.00) for the reconciliation of quantities for the City of Blue Mound, Texas 50th Year Community Development Block Grant (CDBG) Project.

BACKGROUND

On February 26, 2025, Tarrant County Community Development opened bids for a 50th Year Community Development Block Grant (CDBG) project consisting of sewer line improvements on Glenn Drive in Blue Mound, Texas. Leetech Services LLC submitted the low bid in the amount of $237,525.00.

On May 20, 2025, the Commisioners Court, through Court Order #145229, approved a construction contract with Leetech Services LLC for the above-mentioned project. Tarrant County originally certified $201,393.25 in CDBG funds and the City of Blue Mound agreed to contributed $36,131.75.

Approval of Change Order No. 1 will reconcile various contract overruns and underruns. As a result, the original contract amount of $237,525.00 will change by ($10,315.00), bringing the new total project cost to $227,210.00. The funding originally certified by this project remains unchanged, and the City of Blue Mound contribution will decrease from $36,131.75 to $25,816.75.

FISCAL IMPACT

Funding in the amount of $201,393.25 is available through the Community Development Block Grant (CDBG) #B-24-UC-48-001. Upon approval of the claim for payment under this contract, funds will be drawn from the U.S. Treasury through the U.S. Department of Housing and Urban Development's (HUD's) electronic transfer system to Tarrant County's bank account.

PASSED AND APPROVED on December 9, 2025.

COUNTY OF TARRANT
STATE OF TEXAS

By: Separate Electronic Signature Page
Tim O'Hare
County Judge

APPROVED AS TO FORM:

_____
District Attorney's Office*

*By law, the District Attorney's Office may only approve contracts for its clients. We reviewed this document as to form from our client's legal perspective. Other parties may not rely on this approval. Instead, those parties should seek contract review from independent counsel.

Attachments

Change Order No. 1 Leetech Court Backup.pdf

Change Order # : 1

ANALYSIS OF ADJUSTED CONTRACT AMOUNT

DATE: 10/22/25

PROJECT: Glen and Corrin S.S. Tarrant County/City of Blue Mound

OWNER: Tarrant County

CONTRACTOR: Leetech Services

I. DESCRIPTION OF CHANGE AND/OR EXTRA WORK:

Decrease pay quantities

II. ADJUSTMENTS IN CONTRACT PRICE:

ORIGINAL CONTRACT AMOUNT	$ 237,525.000
ADJUSTMENT TO CONTRACT PER PREVIOUS CHANGE ORDER, IF ANY	$ 0
DECREASE OR INCREASE THIS CHANGE ORDER	$ (10,315.00)
REVISED CONTRACT AMOUNT	$ 227,210.00

III. ADJUSTMENT IN CONTRACT TIME

ORIGINAL CONTRACT TIME	90 days
ADJUSTMENTS PER PREVIOUS CHANGE ORDERS	0
REVISED CONTRACT TIME	

RECOMMENDED BY ENGINEER:

BY: Misty Christian

DATE: 11/3/2025

ACCEPTED BY THE CITY:

BY: Sam Dawson

DATE: 11/3/2025

AGREED BY CONTRACTOR:

BY: B Henderson

DATE: 10/22/25

ACCEPTED BY TARRANT COUNTY:

BY:

DATE: 11/14/25

Kimley»Horn

October 27, 2025

Mr. Sean Densmore
City of Blue Mound
18174 Fagan Drive
Blue Mound, TX 76131

Re: Change Order No. 1 and Reconciliation
Glen and Corrin Sanitary Sewer
KHA No. 061335903

Dear Sean:

Attached please find Change Order No. 1 and Reconciliation for the referenced project. Kimley-Horn recommends approval of the $10,315.00 decrease in the contract amount.

Change Order No. 1 and Reconciliation results in a revised total contract amount of $227,210.00. A summary of the original contract amount and change orders to date follows:

Original Contract Amount	Change Order Number	Change in Contract Amount	Revised Contract Amount
$237,525.00			
	1	- $10,315.00	$227,210.00
Net Change in Original Contract Amount through Change Orders: 4.53%			

Please note that the contractor has requested $2,000.00 for (4) sewer service realignments due to obstructions in the field. This shall be paid for using the Miscellaneous Project Allowance pay item and is accounted for in the revised contract amount.

Please execute the attached and return a copy to Leetech Services LLC and Kimley-Horn and Associates.

Sincerely,

KIMLEY-HORN AND ASSOCIATES, INC.

Misty Christian

Misty Christian, P.E., CFM

MDC:vcb

KIMLEY-HORN AND ASSOCIATES, INC.
801 Cherry Street, Unit #11, Suite 1300
Fort Worth, TX 76102

Date: 10/22/2025

CHANGE OR EXTRA WORK ORDER NO. 1

PROJECT DESCRIPTION: Glenn and Corrin Sanitary Sewer
KHA PROJECT NO.: 61335903
OWNER: City of Blue Mound
CONTRACTOR: Leetech Services LLC
ORIGINAL CONTRACT AMOUNT $237,525.00

CHANGE OR EXTRA WORK TO BE PERFORMED

Item No.	Contract Quantity	Final Quantity	Quantity Change	Description of Item	Unit	Unit Price	Decrease in Contract Price	Increase in Contract Price
4	49	48	(1.00)	4" Sanitary Sewer Service Connections w/ cleanout	EA	$1,300.00	-$1,300.00	
5	2	4	2.00	Proposed 4' Standard Sanitary Sewer Manhole	EA	$7,000.00		$ 14,000.00
8	150	65	(85.00)	Point Repair	LF	$59.00		$ (5,015.00)
12	1	0.1	(0.90)	Miscellaneous Project Allowance	LS	$20,000.00	-$18,000.00	

Total Increase in Contract Amount:		$8,985.00
Total Decrease in Contract Amount:	-$19,300.00	
Net Increase in Contract Amount:	$(10,315.00)	
Revised Contract Amount:		$227,210.00
Net Increase in Contract Time of Completion:	N/A	
Revised Contract Time of Completion:	N/A	

Recommended by Engineer:
Kimley-Horn and Associates, Inc.

By _____

Accepted by Contractor:
Leetech Services LLC

By _____

Approved by Owner:
City of Blue Mound

By _____

Contractor's Pay Estimate Line Item Detail

Owner: Tarrant County/[illegible]
Contactor: Leftech Services
Project: Glen and Corrin Sanitary Sewer

Estimate No. 6 and Final Period Ending: 9/10/2025 Invoice Date: 10/10/2025

Item No.	Description	Unit Price	Contract Quantity	Unit	Scheduled Value	Work Completed This Period Quantity	Work Completed This Period Amount	Work Completed To Date Quantity	Work Completed To Date Amount	%
1	Mobilization	$ 8,000.00	1.00	LS	$ 8,000.00	0.05	$ 400.00	1.00	$ 8,000.00	100%
2	General Site Preparation	$ 2,000.00	1	LS	$ 2,000.00	0.00	$ -	1.00	$ 2,000.00	100%
3	6" Sanitary Sewer Line SDR-21 HDPE Pipe (Pipe Burst)	$ 59.00	1,550	LF	$ 91,450.00	0.00	$ -	1550.00	$ 91,450.00	100%
4	4" Sanitary Sewer Service Connections w/ cleanout	$ 1,300.00	49	EA	$ 63,700.00	0.00	$ -	48.00	$ 62,400.00	98%
5	Proposed 4' Standard Sanitary Sewer Manhole	$ 7,000.00	2	EA	$ 14,000.00	0.00	$ -	4.00	$ 28,000.00	200%
6	Connect Existing Sanitary Sewer to Proposed Manhole	$ 2,000.00	2	EA	$ 4,000.00	0.00	$ -	2.00	$ 4,000.00	100%
7	Connect Proposed Sanitary Sewer to Existing Manhole	$ 2,000.00	1	EA	$ 2,000.00	0.00	$ -	1.00	$ 2,000.00	100%
8	Point Repair	$ 59.00	150	LF	$ 8,850.00	0.00	$ -	65.00	$ 3,835.00	43%
9	Pre Construction Television Inspection	$ 2.50	1,550	LF	$ 3,875.00	0.00	$ -	1550.00	$ 3,875.00	100%
10	Post Construction Television Inspection	$ 3.00	1,550	LF	$ 4,650.00	0.00	$ -	1550.00	$ 4,650.00	100%
11	Existing Fence Repair and Restoration Allowance	$ 15,000.00	1	LS	$ 15,000.00	0.00	$ -	1.00	$ 15,000.00	100%
12	Miscellaneous Project Allowance	$ 20,000.00	1	LS	$ 20,000.00	0.10	$ 2,000.00	0.10	$ 2,000.00	10%
	Sewer Service Adjustments	$ 500.00	4	EA	$ 2,000.00		$ -	0	$ -	
					$ -		$ -	0	$ -	
					$ -		$ -	0	$ -	
					$ -		$ -	0	$ -	
					$ -		$ -	0	$ -	
					$ -		$ -	0	$ -	
					$ -		$ -	0	$ -	
					$ -		$ -	0	$ -	
					$ -		$ -	0	$ -	
					$ -		$ -	0	$ -	
					$ -		$ -	0	$ -	
					$ -		$ -	0	$ -	
					$ -		$ -	0	$ -	
					$ -		$ -	0	$ -	
					$ -		$ -	0	$ -	
					$ -		$ -	0	$ -	
					$ -		$ -	0	$ -	
TOTAL BASE BID					$ 237,525.00		$ 2,400.00		$ 227,210.00	96%

TARRANT COUNTY
COMMISSIONERS COURT COMMUNICATION

Court Date: December 9, 2025	**Court Order #:**	**Page:** 1 of 5
Department: Community Development	**Prepared By:** Wren Davis	**Approved By:** James A. McClinton, Director

SUBJECT:

Consideration of Change Order No. 1 to the Construction Contract between Tarrant County and EGW Services for the City of Kennedale, Texas 50th Year Community Development Block Grant Project

*****CONSENT AGENDA *****

COMMISSIONERS COURT ACTION REQUESTED

It is requested that the Commissioners Court consider approving Change Order No. 1 to the construction contract with EGW Services in the amount of ($5,225.25) for the reconciliation of quantities for the City of Kennedale, Texas 50th Year Community Development Block Grant (CDBG) Project.

BACKGROUND

On January 8, 2025, Tarrant County Community Development opened bids for a 50th Year Community Development Block Grant (CDBG) project consisting of water line improvements on North Road in Kennedale, Texas. EGW Services submitted the low bid in the amount of $298,400.75.

On May 20, 2025, the Commisioners Court, through Court Order #145230, approved a construction contract with EGW Services for the above-mentioned project. Tarrant County originally certified $153,001.00 in CDBG funds and the City of Kennedale agreed to contributed $145,399.75.

Approval of Change Order No. 1 will reconcile various contract overruns and underruns. As a result, the original contract amount of $298,400.75 will change by ($5,225.25), bringing the new total project cost to $293,175.50. The funding originally certified by this project remains unchanged, and the City of Kennedale contribution will decrease from $145,399.75 to $140,174.50.

FISCAL IMPACT

Funding in the amount of $153,001.00 is available through the Community Development Block Grant (CDBG) #B-24-UC-48-001. Upon approval of the claim for payment under this contract, funds will be drawn from the U.S. Treasury through the U.S. Department of Housing and Urban Development's (HUD's) electronic transfer system to Tarrant County's bank account.

PASSED AND APPROVED on December 9, 2025.

COUNTY OF TARRANT
STATE OF TEXAS

By: Separate Electronic Signature Page
Tim O'Hare
County Judge

APPROVED AS TO FORM:

_____
District Attorney's Office*

*By law, the District Attorney's Office may only approve contracts for its clients. We reviewed this document as to form from our client's legal perspective. Other parties may not rely on this approval. Instead, those parties should seek contract review from independent counsel.

Attachments

Change Order No. 1 Backup Kennedale EGW.pdf

CONSOLIDATION CHANGE ORDER #1

Date: November 05, 2025
Project: 50th Year CDBG North Road City of Kennedale
Community Development Project
B-24-UC-48-0001-40-15
Owner: Tarrant County
Contractor: EGW Services

I. DESCRIPTION OF CHANGE AND/OR EXTRA WORK:

ADJUST PAY ITEM QUANTITIES TO REPRESENT FINAL SCOPE OF WORK. SEE ATTACHED SUMMARY.

II. ADJUSTMENTS IN CONTRACT PRICE:

ORIGINAL CONTRACT AMOUNT	$298,400.75
LIQUIDATED DAMAGES	$0.00
ADJUSTMENTS TO CONTRACT AMOUNT PER PREVIOUS CHANGE/EXTRA WORK ORDER	$0.00
DECREASE PER THIS CHANGE ORDER	$(5,225.25)
REVISED CONTRACT AMOUNT	**$293,175.50**

III. ADJUSTMENTS IN CONTRACT TIME

ORIGINAL CONTRACT TIME	60 calendar days
ADJUSTMENTS PER PREVIOUS CHANGE ORDERS	0 calendar days
INCREASE PER THIS CHANGE ORDER	60 calendar days
CONTRACT TIME PER THIS CHANGE ORDER	120 calendar days

RECOMMENDED BY ENGINEER:

Max Aransen Digitally signed by Max Aransen DN: C=US, E=max.aransen@shield-engineering.com, CN=Max Aransen Date: 2025.11.10 18:55:34-05'00' Date: 11/10/25
Shield Engineering Group, PLLC

AGREED BY CONTRACTOR:

Eric Wickliffe Date: 11/10/2025
EGW Services

ACCEPTED BY OWNER:

Date: 11/14/25
CD Program Manager

APPROVED BY CITY:

Kristian Sugin Date: 11/11/25
City of Kennedale

WORKSHEET FOR CONSOLIDATION CHANGE ORDER

November 05, 2025

PARTIAL PAYMENT ESTIMATE

PARTIAL PAY ESTIMATE		
EGW Services		
Water Line Improvements for North Road Project Number : B-24-UC-		
Completion Date:	**ITRACT AMOUNT**	**DATES OF ESTIMATE DATES OF ESTIMATE:**
Original:	**INAL: $ 298,400.75**	**FROM: 6/16/2025 FROM: 7/19/2025**
Revised: N/A	**REVISED: N/A**	**TO: 7/19/2025 TO: 10/24/2025**

				Bid	Pay Estimate 1		Pay Estimate 2		Total to Date		Pct
Item	**GENERAL**	**Quantity**	**Unit**	**Unit Price**	**Quantity**	**Amount**	**Quantity**	**Amount**	**Quantity**	**Amount**	**Completed**
1.	Mobilization	1	LS	$15,300.00	1	$15,300.00		$0.00	1.00	$15,300.00	100%
2.	Site Preparation & Restoration	1	LS	$11,000.00	1	$11,000.00		$0.00	1.00	$11,000.00	100%
3.	Remove & Salvage Fire Hydrant	1	EA	$1,650.00		$0.00	1	$1,650.00	1.00	$1,650.00	100%
4.	Remove & Salvage Water Meter	9	EA	$385.00		$0.00	9	$3,465.00	9.00	$3,465.00	100%
5.	Remove & Salvage Gate Valve	5	EA	$682.00		$0.00	5	$3,410.00	5.00	$3,410.00	100%
6.	Remove Exist 2" Waterline	55	LF	$14.00			55	$770.00	55.00	$770.00	100%
7.	Remove Exist 6" ACP Waterline	33	LF	$22.00		$0.00	35	$770.00	35.00	$770.00	106%
8.	Remove Concrete Driveway	150	SF	$5.00		$0.00	150	$750.00	150.00	$750.00	100%
9.	6" PVC Water Pipe	89	LF	$32.00	89	$2,848.00	28	$896.00	117.00	$3,744.00	131%
10.	8" PVC Water Pipe	1,241	LF	$45.00	1,241	$55,845.00	60	$2,700.00	1301.00	$58,545.00	105%
11.	Install New Fire Hydrant Assembly	1	EA	$7,900.00	1	$7,900.00		$0.00	1.00	$7,900.00	100%
12.	Waterline Concrete Encasement	50	LF	$55.00	50	$2,750.00		$0.00	50.00	$2,750.00	100%
13.	Ductile Iron Water Fittings (AWWA C-153) with Restraint	1	TN	$12,750.00	1	$12,750.00		$0.00	1.00	$12,750.00	100%
14	Install 6" Gate Valve & Box	3	EA	$1,750.00	3	$5,250.00		$0.00	3.00	$5,250.00	100%
15	Install 8" Gate Valve & Box	5	EA	$2,750.00	5	$13,750.00		$0.00	5.00	$13,750.00	100%
16	Connect to Exist 2"-12" Waterline	4	EA	$3,100.00		$0.00	4	$12,400.00	4.00	$12,400.00	100%
17	Install New Meter Box	13	EA	$370.00		$0.00	14	$5,180.00	14.00	$5,180.00	108%
18	1" Copper Water Service	11	EA	$1,280.00	11	$14,080.00	1	$1,280.00	12.00	$15,360.00	109%
19	2" Copper Water Service	2	EA	$4,630.00	2	$9,260.00		$0.00	2.00	$9,260.00	100%
20	Install Double Check Valve Assembly	2	EA	$24,000.00		$0.00	2	$48,000.00	2.00	$48,000.00	100%
21	Flowable Fill for Abandonment of Waterline	9	CY	$110.00		$0.00	9	$990.00	9.00	$990.00	100%
22	6" Abandonment Plug	8	EA	$550.00		$0.00	8	$4,400.00	8.00	$4,400.00	100%
23	Permanent Asphalt Pavement Repair	1241	LF	$25.75		$0.00	1418	$36,513.50	1418.00	$36,513.50	114%
24	Concrete Driveway	150	SF	$35.00		$0.00		$0.00	0.00	$0.00	0%
25	6" Concrete Crub & Gutter	50	LF	$176.00		$0.00		$0.00	0.00	$0.00	0%
26	Trench Safety	1241	LF	$1.00	1241	$1,241.00	177	$177.00	1418.00	$1,418.00	114%
27	Traffic Control	1	LS	$4,950.00	1	$4,950.00		$0.00	1.00	$4,950.00	100%
28	As-Built Survey	1	LS	$4,100.00		$0.00	1	$4,100.00	1.00	$4,100.00	100%
29	Construction Allowance	1	LS	$10,000.00		$0.00	0.88	$8,800.00	0.88	$8,800.00	88%
Total						$156,924.00		$136,251.50		$293,175.50	
Amount Retained: 10%						$15,692.40		$13,625.15		29,317.55	
Less Previous Payments:										141,231.60	
Amount Due:						$141,231.60		$122,626.35		$122,626.35	

Eric Wickliffe 11/6/2025

Approved By: (Contractor)

Approved By: (Date) (Engineer)

Approved By: (Date) (Owner)

TARRANT COUNTY
COMMISSIONERS COURT COMMUNICATION

Court Date: December 9, 2025	**Court Order #:**	**Page:** 1 of 10
Department: County Clerk	**Prepared By:** Norma Gorena, Executive Assistant to County Clerk	**Approved By:** James Knowles

SUBJECT:

Receive and File the County Clerk's Monthly Report - October 2025

***** CONSENT AGENDA *****

COMMISSIONERS COURT ACTION REQUESTED

It is requested that the Commissioners Court receive and file the County Clerk's Monthly Report for October 2025.

BACKGROUND

Under Section 114.044, Texas Local Government Code, the County Clerk is requesting that the Commissioners Court receive and file the County Clerk's Report of Receipts and Disbursements for October 2025.

FISCAL IMPACT

There is no fiscal impact with this action.

Attachments

Commissioners Court Communication - October 2025 Financials.pdf

MARY LOUISE NICHOLSON, COUNTY CLERK
TARRANT COUNTY
MONTHLY REPORT - COURTS
For October 01, 2025 through October 31, 2025

	Account	Month to Date
General Fund Receipts:		
Due To CSCD	10000-208210	$ 1,289.24
Publication Fee	10000-208299	-
Criminal Justice Planning Fund	10000-209205	-
Law Enforcement Off Std/Ed	10000-209206	-
J& CPT Fund	10000-209207	-
Comp For Victims Of Crime	10000-209208	-
Crimestoppers Fee	10000-209211	-
Law Enforcement Mgmt Institute	10000-209212	-
Comp Rehabilitation Fund	10000-209213	-
General Revenue	10000-209214	-
Breath Alcohol Testing	10000-209215	-
Law Enforce Officer Admin Fee	10000-209223	-
Consolidated State Fees	10000-209225	68,317.05
Fugitive Apprehension	10000-209226	-
Juvenile Crime/Delinquency-State	10000-209227	-
Time Payment Fee	10000-209228	129.74
Legal Service for Indigent	10000-209229	-
Judicial Fund Support Fee-CCL	10000-209231	-
Judicial Fund Support Fee-Probate	10000-209231	-
Judicial Fund Support Fee-Criminal	10000-209231	-
Correctional Management	10000-209234	-
DNA Testing	10000-209235	-
Non Disclosure Fees	10000-209237	28.00
Jury Reimbursement Fees-JF05	10000-209239	20.76
EMS	10000-209240	22,790.54
Judicial Fee-Conv	10000-209241	31.13
Judicial Fees - Filings (JSAL)	10000-209247	-
TDPS Failure to Appear/Pay-State	10000-209248	44.91
Drug Court Fees-DWI - State	10000-209250	80.15
Indigent Defense Representation	10000-209251	10.37
Judicial Fee 51.702b	10000-209252	77.85
Moving Violation Fee	10000-209255	0.13
Truancy Prevention	10000-209257	-
Electronic Filing System Fund Fee	10000-209258	-
Electronic Filing Criminal Court Cost	10000-209259	20.95
Judicial Court Training Fee	10000-209261	-
DWI Traffic Fine HB 2048	10000-209269	54,589.70
State Traffic Fine TC 542.4031	10000-209270	3,550.70
State Initial Filing Fee SB41	10000-209272	41,183.49
State Subsequent Filing Fee SB41	10000-209273	225.00
TX Controlled Substance Act 102.0179	10000-209281	393.16
TDPS Failure to Appear/Pay-Omnibase-Vendor	10000-209809	13.47
Sheriff Fees	10000-422001	11,660.33
Breath Alcohol Test	10000-422008	29.30
Constable Fees:		
Pct # 1	10000-423101	10,060.00
Pct # 2	10000-423201	1,575.00
Pct # 3	10000-423301	450.00
Pct # 4	10000-423401	900.00
Pct # 5	10000-423501	1,200.00
Pct # 6	10000-423601	2,325.00
Pct # 7	10000-423701	900.00
Pct # 8	10000-423801	2,550.00
Consolidated Local Fee A & B	10000-424001	48,189.92
Consolidated Local Fee C	10000-424002	2,212.00
Local Initial Filing Fee CCL - SB41	10000-424003	235,283.33
Local Subsequent Filing Fee CCL - SB41	10000-424004	1,400.00
Local Initial Filing Fee PRB - SB41	10000-424005	108,155.00
Local Subsequent Filing Fee PRB - SB41	10000-424006	2,325.00
E-File Fee	10000-424118	-
Certified Copies	10000-424122	11,254.00
Clerk Fees - Civil Courts	10000-424131	11,463.60
Clerk Fees - Probate Courts	10000-424141	22,464.00
Document File Fee	10000-424142	175.00
Probate Public Administrator	10000-424143	-
Clerks Fee-Criminal Courts	10000-424151	1,663.57
Local Judicial Fund (misdemeanor conviction fee)	10000-424152	-
Transaction Fees	10000-424153	3,587.75
TDPS Failure to Appear/Pay-County	10000-424154	724.26
Time Payment Fee	10000-424156	3,182.84
Court Reporter Fees	10000-424161	8.00
Video Fees/Revocation Fees	10000-424165	3,490.14
Asst. Court Investigator	10000-424171	-
Court Investigator	10000-424172	-

MARY LOUISE NICHOLSON, COUNTY CLERK
TARRANT COUNTY
MONTHLY REPORT - COURTS
For October 01, 2025 through October 31, 2025

	Account	Month to Date
Miscellaneous Income (Fine Overpayments)	10000-424180	202.40
Attorney Access Fee - Setup	10000-424182	200.00
Attorney Access Fee - Annual	10000-424183	3,100.00
Other Revenue-Due to Auditor	10000-424198	-
District Clerk Fees	10000-424201	-
District Attorney Fees	10000-424411	100.00
Probate Judge # 1	10000-425101	1,276.00
Probate Judge # 2	10000-425201	996.00
Jury Fees	10000-429701	530.00
Publication/Miscellaneous Fee	10000-429999	-
Fines:		
CCC # 1	10000-432101	9,810.05
CCC # 2	10000-432102	10,319.42
CCC # 3	10000-432103	7,015.95
CCC # 4	10000-432104	11,671.48
CCC # 5	10000-432105	4,935.13
CCC # 6	10000-432106	1,513.73
CCC # 7	10000-432107	12,228.53
CCC # 8	10000-432108	10,368.38
CCC # 9	10000-432109	7,368.52
CCC # 10	10000-432110	17,873.40
Interest on Bond Forfeitures	10000-450001	2,506.86
Interest on NISI Judgement	10000-450002	-
Attorney/Restitution Fees Probate	10000-481003	-
Attorney/Restitution Fees:		
CCC # 1	10000-481003	-
CCC # 2	10000-481003	280.83
CCC # 3	10000-481003	-
CCC # 4	10000-481003	-
CCC # 5	10000-481003	661.00
CCC # 6	10000-481003	364.63
CCC # 7	10000-481003	-
CCC # 8	10000-481003	680.54
CCC # 9	10000-481003	1,773.30
CCC # 10	10000-481003	(1.67)
Bond Forfeitures:		
CCC # 1	10000-481004	9,371.50
CCC # 2	10000-481004	9,466.57
CCC # 3	10000-481004	6,055.50
CCC # 4	10000-481004	5,410.00
CCC # 5	10000-481004	35,308.00
CCC # 6	10000-481004	12,860.73
CCC # 7	10000-481004	4,196.50
CCC # 8	10000-481004	6,848.50
CCC # 9	10000-481004	2,000.00
CCC # 10	10000-481004	2,759.00
NISI Judgment Amount	10000-481004	-
Contempt Of Court	10000-481008	-
Medicaid - Court Investigator	10000-481009	-
Medicaid - Ad Litem	10000-481011	-
Other Revenue	10000-485003	213.00
Other Revenue-Due to Auditor	10000-485003	-
Other Revenue- Postage	10000-485003	12.00
Records Management - CC	21100-424175	12.97
Records Management - Court at Law & Probate	21200-424174	-
Records Management - Criminal	21200-424175	116.75
Records Preservation Fee	21400-424174	-
Security Fees - Courts	22100-424167	15.58
Graffiti Eradication Cost	22400-424169	-
Juvenile Crime/Delinquency	22400-424169	-
Dispute Resolution (ADRS)	22500-429703	-
Local Guardianship Fund	23100-424155	-
Drug Court Fees-DWI	23200-424178	39.07
Drug Court Fees	23200-424179	41.08
Records Management - Technology	23300-424175	20.76
Law Library Fees	24100-424176	-
Probate Continuing Education	24200-425101	-
Appeal Justice Fund	24300-424166	-
Self - Insurance Fund	62100-424164	-
Total General Fund Receipts:		**$ 880,546.37**

MARY LOUISE NICHOLSON, COUNTY CLERK
TARRANT COUNTY
MONTHLY REPORT - COURTS
For October 01, 2025 through October 31, 2025

	Account	Month to Date
General Fund Disbursements:		
Due To CSCD	10000-208210	$ 1,289.24
Publication Fee	10000-208299	-
Criminal Justice Planning Fund	10000-209205	-
Law Enforcement Off Std/Ed	10000-209206	-
J& CPT Fund	10000-209207	-
Comp For Victims Of Crime	10000-209208	-
Crimestoppers Fee	10000-209211	-
Law Enforcement Mgmt Institute	10000-209212	-
Comp Rehabilitation Fund	10000-209213	-
General Revenue	10000-209214	-
Breath Alcohol Testing	10000-209215	-
Law Enforce Officer Admin Fee	10000-209223	-
Consolidated State Fees	10000-209225	68,317.05
Fugitive Apprehension	10000-209226	-
Juvenile Crime/Delinquency-State	10000-209227	-
Time Payment Fee	10000-209228	129.74
Legal Service for Indigent	10000-209229	-
Judicial Fund Support Fee-CCL	10000-209231	-
Judicial Fund Support Fee-Probate	10000-209231	-
Judicial Fund Support Fee-Criminal	10000-209231	-
Correctional Management	10000-209234	-
DNA Testing	10000-209235	-
Non Disclosure Fees	10000-209237	28.00
Jury Reimbursement Fees-JF05	10000-209239	20.76
EMS	10000-209240	22,790.54
Judicial Fee-Conv	10000-209241	31.13
Judicial Fees - Filings (JSAL)	10000-209247	-
TDPS Failure to Appear/Pay-State	10000-209248	44.91
Drug Court Fees-DWI - State	10000-209250	80.15
Indigent Defense Representation	10000-209251	10.37
Judicial Fee 51.702b	10000-209252	77.85
Moving Violation Fee	10000-209255	0.13
Truancy Prevention	10000-209257	-
Electronic Filing System Fund Fee	10000-209258	-
Electronic Filing Criminal Court Cost	10000-209259	20.95
Judicial Court Training Fee	10000-209261	-
DWI Traffic Fine HB 2048	10000-209269	54,589.70
State Traffic Fine TC 542.4031	10000-209270	3,550.70
State Initial Filing Fee SB41	10000-209272	41,183.49
State Subsequent Filing Fee SB41	10000-209273	225.00
TX Controlled Substance Act 102.0179	10000-209281	393.16
TDPS Failure to Appear/Pay-Omnibase-Vendor	10000-209809	13.47
Sheriff Fees	10000-422001	11,660.33
Breath Alcohol Test	10000-422008	29.30
Constable Fees:		
Pct # 1	10000-423101	10,060.00
Pct # 2	10000-423201	1,575.00
Pct # 3	10000-423301	450.00
Pct # 4	10000-423401	900.00
Pct # 5	10000-423501	1,200.00
Pct # 6	10000-423601	2,325.00
Pct # 7	10000-423701	900.00
Pct # 8	10000-423801	2,550.00
Consolidated Local Fee A & B	10000-424001	48,189.92
Consolidated Local Fee C	10000-424002	2,212.00
Local Initial Filing Fee CCL - SB41	10000-424003	235,283.33
Local Subsequent Filing Fee CCL - SB41	10000-424004	1,400.00
Local Initial Filing Fee PRB - SB41	10000-424005	108,155.00
Local Subsequent Filing Fee PRB - SB41	10000-424006	2,325.00
E-File Fee	10000-424118	-
Certified Copies	10000-424122	11,254.00
Clerk Fees - Civil Courts	10000-424131	11,463.60
Clerk Fees - Probate Courts	10000-424141	22,464.00
Document File Fee	10000-424142	175.00
Probate Public Administrator	10000-424143	-
Clerks Fee-Criminal Courts	10000-424151	1,663.57
Local Judicial Fund (misdemeanor conviction fee)	10000-424152	-
Transaction Fees	10000-424153	3,587.75
TDPS Failure to Appear/Pay-County	10000-424154	724.26
Time Payment Fee	10000-424156	3,182.84
Court Reporter Fees	10000-424161	8.00
Video Fees/Revocation Fees	10000-424165	3,490.14
Asst. Court Investigator	10000-424171	-

MARY LOUISE NICHOLSON, COUNTY CLERK
TARRANT COUNTY
MONTHLY REPORT - COURTS
For October 01, 2025 through October 31, 2025

	Account	Month to Date
Court Investigator	10000-424172	-
Miscellaneous Income (Fine Overpayments)	10000-424180	202.40
Fine Overpayments-Escheat to County & State	10000-424180	-
Attorney Access Fee - Setup	10000-424182	200.00
Attorney Access Fee - Annual	10000-424183	3,100.00
Other Revenue-Due to Auditor	10000-424198	-
District Clerk Fees	10000-424201	-
District Attorney Fees	10000-424411	100.00
Probate Judge # 1	10000-425101	1,276.00
Probate Judge # 2	10000-425201	996.00
Jury Fees	10000-429701	530.00
Publication/Miscellaneous Fee	10000-429999	-
Fines:		
CCC # 1	10000-432101	9,810.05
CCC # 2	10000-432102	10,319.42
CCC # 3	10000-432103	7,015.95
CCC # 4	10000-432104	11,671.48
CCC # 5	10000-432105	4,935.13
CCC # 6	10000-432106	1,513.73
CCC # 7	10000-432107	12,228.53
CCC # 8	10000-432108	10,368.38
CCC # 9	10000-432109	7,368.52
CCC # 10	10000-432110	17,873.40
Interest on Bond Forfeitures	10000-450001	2,506.86
Interest on NISI Judgement	10000-450002	-
Attorney/Restitution Fees Probate	10000-481003	-
Attorney/Restitution Fees:		
CCC # 1	10000-481003	-
CCC # 2	10000-481003	280.83
CCC # 3	10000-481003	-
CCC # 4	10000-481003	-
CCC # 5	10000-481003	661.00
CCC # 6	10000-481003	364.63
CCC # 7	10000-481003	-
CCC # 8	10000-481003	680.54
CCC # 9	10000-481003	1,773.30
CCC # 10	10000-481003	(1.67)
Bond Forfeitures:		
CCC # 1	10000-481004	9,371.50
CCC # 2	10000-481004	9,466.57
CCC # 3	10000-481004	6,055.50
CCC # 4	10000-481004	5,410.00
CCC # 5	10000-481004	35,308.00
CCC # 6	10000-481004	12,860.73
CCC # 7	10000-481004	4,196.50
CCC # 8	10000-481004	6,848.50
CCC # 9	10000-481004	2,000.00
CCC # 10	10000-481004	2,759.00
NISI Judgment Amount	10000-481004	-
Contempt Of Court	10000-481008	-
Medicaid - Court Investigator	10000-481009	-
Medicaid - Ad Litem	10000-481011	-
Other Revenue	10000-485003	213.00
Other Revenue - Escheat to County & State	10000-485003	-
Other Revenue-Due to Auditor	10000-485003	-
Other Revenue- Postage	10000-485003	12.00
Records Management - CC	21100-424175	12.97
Records Management - Court at Law & Probate	21200-424174	-
Records Management - Criminal	21200-424175	116.75
Records Preservation Fee	21400-424174	-
Security Fees - Courts	22100-424167	15.58
Graffiti Eradication Cost	22400-424169	-
Juvenile Crime/Delinquency	22400-424169	-
Dispute Resolution (ADRS)	22500-429703	-
Local Guardianship Fund	23100-424155	-
Drug Court Fees-DWI	23200-424178	39.07
Drug Court Fees	23200-424179	41.08
Records Management - Technology	23300-424175	20.76
Law Library Fees	24100-424176	-
Probate Continuing Education	24200-425101	-
Appeal Justice Fund	24300-424166	-
Self - Insurance Fund	62100-424164	-
Total General Fund Disbursements:		**$ 880,546.37**

MARY LOUISE NICHOLSON, COUNTY CLERK
TARRANT COUNTY
COUNTY COURT AT LAW
SCHEDULE OF RECEIPTS
For October 01, 2025 through October 31, 2025

	Account	Month to Date
Legal Service for Indigent	10000-209229	$ -
Judicial Support Fund	10000-209231	-
Judicial Fee- Filings (JSAL)	10000-209247	-
Electronic Filing System Fund Fee	10000-209258	-
Judicial Court Training Fee	10000-209261	-
State Initial Filing Fee SB41	10000-209272	1,507.00
State Subsequent Filing Fee SB41	10000-209273	225.00
Sheriff's Fees	10000-422001	-
Constable Fees:		
Precinct #1	10000-423101	900.00
Precinct #2	10000-423201	1,200.00
Precinct #3	10000-423301	150.00
Precinct #4	10000-423401	825.00
Precinct #5	10000-423501	900.00
Precinct #6	10000-423601	1,725.00
Precinct #7	10000-423701	600.00
Precinct #8	10000-423801	2,100.00
Local Initial Filing Fee CCL - SB41	10000-424003	200,859.00
Local Subsequent Filing Fee CCL - SB41	10000-424004	980.00
E-File Fee	10000-424118	-
Certified Copies	10000-424122	906.00
Clerk Fees - Civil	10000-424131	11,463.60
Court Reporter	10000-424161	-
Jury Fee	10000-429701	500.00
Contempt of Court	10000-481008	-
Other Revenue	10000-485003	213.00
Other Revenue-Due to Auditor	10000-485003	-
Other Revenue-Postage	10000-485003	12.00
Records Management - Courts	21200-424174	-
Records Preservation	21400-424174	-
Security Fees - Courts	22100-424167	-
Dispute Resolution (ADRS)	22500-429703	-
Law Library Fees	24100-424176	-
Appeal Justice Fund	24300-424166	-
County Court at Law - General Fund Total		**$ 225,065.60**
Trust Fund		1,941,353.98
Total County Court at Law - October 2025		**$ 2,166,419.58**

MARY LOUISE NICHOLSON, COUNTY CLERK
TARRANT COUNTY
PROBATE AND MENTAL HEALTH COURTS
SCHEDULE OF RECEIPTS
For October 01, 2025 through October 31, 2025

	Account	Month to Date
Publication Fee	10000-208299	$ -
Legal Service for Indigent	10000-209229	-
Judicial Support Fund	10000-209231	-
Judicial Fee- Filings (JSAL)	10000-209247	-
Electronic Filing System Fund Fee	10000-209258	-
Judicial Court Training Fee	10000-209261	-
State Initial Filing Fee SB41	10000-209272	20,413.00
State Subsequent Filing Fee SB41	10000-209273	-
Constable Fees:		
Precinct #1	10000-423101	9,160.00
Precinct #2	10000-423201	375.00
Precinct #3	10000-423301	300.00
Precinct #4	10000-423401	75.00
Precinct #5	10000-423501	300.00
Precinct #6	10000-423601	600.00
Precinct #7	10000-423701	300.00
Precinct #8	10000-423801	450.00
Local Initial Filing Fee PRB - SB41	10000-424005	108,155.00
Local Subsequent Filing Fee PRB - SB41	10000-424006	2,325.00
E-File Fee	10000-424118	-
Copies	10000-424122	4,172.00
Copies- Probate CC	10000-424122	-
Clerk Fees - Probate	10000-424141	22,464.00
Document File Fee	10000-424142	175.00
Probate Public Administrator	10000-424143	-
Court Reporter	10000-424161	-
Assistant Court Investigator	10000-424171	-
Court Investigator	10000-424172	-
Attorney Access Fee - Setup	10000-424182	200.00
Attorney Access Fee - Annual	10000-424183	3,100.00
Probate Judge #1	10000-425101	1,276.00
Probate Judge #2	10000-425201	996.00
Jury Fee	10000-429701	20.00
Attorney/Restitution Fees Probate	10000-481003	-
Contempt of Court	10000-481008	-
Medicaid - Court Investigator	10000-481009	-
Medicaid - Ad Litem	10000-481011	-
Other Revenue	10000-485003	-
Other Revenue-Due to Auditor	10000-424198	-
Other Revenue-Postage	10000-485003	-
Records Management - Courts	21200-424174	-
Records Preservation	21400-424174	-
Security Fees - Courts	22100-424167	-
Dispute Resolution (ADRS)	22500-429703	-
Local Guardianship Fund	23100-424155	-
Law Library Fees	24100-424176	-
Probate Continuing Education	24200-425101	-
Appeal Justice Fund	24300-424166	-
Probate and Mental Health - General Fund Total		**$ 174,856.00**
Trust Fund		78,534.37
Trust Fund - Ad Litem Fee		36,300.00
Total Probate and Mental Health Courts - October 2025		**$ 289,690.37**

MARY LOUISE NICHOLSON, COUNTY CLERK
TARRANT COUNTY
CRIMINAL COURTS
SCHEDULE OF RECEIPTS
For October 01, 2025 through October 31, 2025

	Account	Month to Date
Due To CSCD	10000-208210	$ 1,289.24
Criminal Justice Planning Fund	10000-209205	-
Law Enforcement Off Std/Ed	10000-209206	-
J & CPT Fund	10000-209207	-
Comp for Victims of Crime	10000-209208	-
Crimestoppers Fee	10000-209211	-
Law Enforcement Mgmt Institute	10000-209212	-
Comp Rehabilitation Fund	10000-209213	-
General Revenue	10000-209214	-
Breath Alcohol Testing	10000-209215	-
Law Enforce Officer Admin Fee	10000-209223	-
Consolidated State Fees	10000-209225	68,317.05
Fugitive Apprehension	10000-209226	-
Juvenile Crime/Delinquency-State	10000-209227	-
Time Payment Fee	10000-209228	129.74
Legal Service for Indigent	10000-209229	-
Judicial Fund Support Fee	10000-209231	-
Correctional Management	10000-209234	-
DNA Testing	10000-209235	-
Non Disclosure Fees	10000-209237	28.00
Jury Reimbursement Fees-JF05	10000-209239	20.76
EMS	10000-209240	22,790.54
Judicial Fee-Conv	10000-209241	31.13
Judical Fees-JSAL	10000-209247	-
TDPS Failure to Appear/Pay-State	10000-209248	44.91
Drug Court Fees-DWI-State	10000-209250	80.15
Indigent Defense Representation	10000-209251	10.37
Judicial Fee 51.702b	10000-209252	77.85
Moving Violation Fee	10000-209255	0.13
Truancy Prevention	10000-209257	-
Electronic Filing System Fund Fee	10000-209258	-
Electronic Filing Criminal Court Cost	10000-209259	20.95
Judicial Court Training Fee	10000-209261	-
DWI Traffic Fine HB 2048	10000-209269	54,589.70
State Traffic Fine TC 542.4031	10000-209270	3,550.70
State Initial Filing Fee SB41	10000-209272	19,263.49
State Subsequent Filing Fee SB41	10000-209273	-
TX Controlled Substance Act 102.0179	10000-209281	393.16
TDPS Failure to Appear/Pay-Omnibase-Vendor	10000-209809	13.47
Sheriff Fees	10000-422001	11,660.33
Breath Alcohol Test	10000-422008	29.30
Consolidated Local Fee A & B	10000-424001	48,189.92
Consolidated Local Fee C	10000-424002	2,212.00
Local Initial Filing Fee - SB41	10000-424003	34,424.33
Local Subsequent Filing Fee - SB41	10000-424004	420.00
E-File Fee	10000-424118	-
Certified Copies	10000-424122	6,176.00
Clerks Fee	10000-424151	1,663.57
Local Judicial Fund (misdemeanor conviction fee)	10000-424152	-
Transaction Fees	10000-424153	3,587.75
TDPS Failure to Appear/Pay-County	10000-424154	724.26
Time Payment Fee	10000-424156	3,182.84
Court Reporter Fees	10000-424161	8.00
Video Fees/Revocation Fees	10000-424165	3,490.14
Miscellaneous Income (Fine Overpayments)	10000-424180	202.40
District Clerk Fees	10000-424201	-
District Attorney Fees	10000-424411	100.00
Jury Fees	10000-429701	10.00
Publication/Miscellaneous Fees	10000-429999	-

MARY LOUISE NICHOLSON, COUNTY CLERK
TARRANT COUNTY
CRIMINAL COURTS
SCHEDULE OF RECEIPTS
For October 01, 2025 through October 31, 2025

	Account	Month to Date
Fines:		
CCC #1	10000-432101	9,810.05
CCC #2	10000-432102	10,319.42
CCC #3	10000-432103	7,015.95
CCC #4	10000-432104	11,671.48
CCC #5	10000-432105	4,935.13
CCC #6	10000-432106	1,513.73
CCC #7	10000-432107	12,228.53
CCC #8	10000-432108	10,368.38
CCC #9	10000-432109	7,368.52
CCC #10	10000-432110	17,873.40
Interest on Bond Forfeitures	10000-450001	2,506.86
Interest on NISI Judgement	10000-450002	-
Attorney/Restitution Fees:		
CCC #1	10000-481003	-
CCC #2	10000-481003	280.83
CCC #3	10000-481003	-
CCC #4	10000-481003	-
CCC #5	10000-481003	661.00
CCC #6	10000-481003	364.63
CCC #7	10000-481003	-
CCC #8	10000-481003	680.54
CCC #9	10000-481003	1,773.30
CCC #10	10000-481003	(1.67)
Bond Forfeitures:		
CCC #1	10000-481004	9,371.50
CCC #2	10000-481004	9,466.57
CCC #3	10000-481004	6,055.50
CCC #4	10000-481004	5,410.00
CCC #5	10000-481004	35,308.00
CCC #6	10000-481004	12,860.73
CCC #7	10000-481004	4,196.50
CCC #8	10000-481004	6,848.50
CCC #9	10000-481004	2,000.00
CCC #10	10000-481004	2,759.00
NISI Judgment Amount	10000-481004	-
Contempt of Court	10000-481008	-
Other Fees	10000-485003	-
Other Fees-Due to Auditor	10000-485003	
Records Management - CC	21100-424175	12.97
Records Management - Criminal	21200-424175	116.75
Records Preservation Fee	21400-424174	-
Security - Courts	22100-424167	15.58
Graffiti Eradication Cost	22400-424169	-
Juvenile Crime/Delinquency	22400-424169	-
Dispute Resolution (ADRS)	22500-429703	-
Drug Court Fees-DWI	23200-424178	39.07
Drug Court Fees	23200-424179	41.08
Records Management - Technology	23300-424175	20.76
Law Library	24100-424176	-
Appeal Justice Fund	24300-424166	-
Self-Insurance Fund	62100-424164	-
Total County Criminal Courts - October 2025		**$ 480,624.77**

STATE OF TEXAS §

COUNTY OF TARRANT §

I, MARY LOUISE NICHOLSON, COUNTY CLERK OF TARRANT COUNTY, STATE OF TEXAS, certify that the above is a statement of the RECEIPTS AND CORRECT AND TRUE STATEMENT OF THE EXPENDITURES made by me for the month of October 2025, in connection with the office of County Clerk.

MARY LOUISE NICHOLSON, COUNTY CLERK
Tarrant County, Texas

By James Knowles

James Knowles
Accounting Manager

STATE OF TEXAS §

COUNTY OF TARRANT §

On this 10th day of November 2025, personally appeared James Knowles known to me to be the person whose name is subscribed to the foregoing instrument, and acknowledged he executed the same for the purpose therein contained.

In witness whereof, I hereunto set my hand and official seal.

MARY LOUISE NICHOLSON, COUNTY CLERK
Tarrant County, Texas

By Carol Stednitz

Carol Stednitz
Assistant Accounting Manager

TARRANT COUNTY
COMMISSIONERS COURT COMMUNICATION

Court Date: December 9, 2025	**Court Order #:**	**Page:** 1 of 10
Department: Criminal Courts	**Prepared By:** Polly Maxwell	**Approved By:** Mark Kratovil, Assistant District Attorney

SUBJECT:

Consideration of a Contract between Tarrant County and MHMR of Tarrant County for Services Related to the In-Custody Batterers Intervention Program and the Youthful Offenders Diversion Alternative Program

*****CONSENT AGENDA *****

COMMISSIONERS COURT ACTION REQUESTED

It is requested that the Commissioners Court consider the approval of the FY 2026 contract between Tarrant County and MHMR of Tarrant County for the In-Custody and Labor Detail Batterers Intervention Program (BIP) and Youthful Offenders Diversion Alternative (YODA) program.

BACKGROUND

In 2003, the Commissioners Court approved creation of the BIP, which is a collaborative program between County Criminal Court No. 5, the Sheriff's Office, MHMR of Tarrant County and other key stakeholders to provide educational classes and counseling services to in-custody batterers.

The BIP aims to educate and rehabilitate individuals who commit domestic violence. The goal is to change the offender's thinking and behavior, hold them accountable, enhance victim safety, and reduce the likelihood of further violence. The main purpose of BIPs is to help batterers learn nonviolent skills.

The YODA program offers an alternative to traditional pre-trial diversion programs for family assault cases. It provides counseling and case management to young offenders aged 17-25 who have been arrested for assaulting a family member. The program is focused on identifying and building on the strengths of the defendants and helping them set goals to steer their lives away from future criminal behavior and violence.

With approval, the FY 2026 contract will continue to provide counseling services to both programs for an amount not to exceed $100,000.00. The term of this contract is from October 1, 2025 through September 30, 2026.

The Criminal District Attorney's Office has reviewed the contract as to form.

FISCAL IMPACT

Funding in the FY 2026 operating budget of Tarrant County Criminal Court No. 5 in the amount of 100,000.00 is available in account 10000-2026 General Fund/4220500000 County Criminal Court No. 5/ 566021 MHMR.

PASSED AND APPROVED on December 9, 2025.

COUNTY OF TARRANT
STATE OF TEXAS

By: Separate Electronic Signature Page
Tim O'Hare
County Judge

APPROVED AS TO FORM:

_____
District Attorney's Office*

*By law, the District Attorney's Office may only approve contracts for its clients. We reviewed this document as to form from our client's legal perspective. Other parties may not rely on this approval. Instead, those parties should seek contract review from independent counsel.

Attachments

2026 BIP and YODA- to DA.pdf

STATE OF TEXAS

COUNTY OF TARRANT

FY 2026 CONTRACT BETWEEN TARRANT COUNTY AND MHMR of TARRANT COUNTY FOR THE IN-CUSTODY BATTERERS INTERVENTION AND THE YOUTHFUL OFFENDER DIVERSION PROGRAM

WHEREAS, the County of Tarrant **("COUNTY")** recognizes a need to provide countywide mental health services.

WHEREAS, through the auspices of the MHMR of TARRANT COUNTY **("MHMR OF TARRANT COUNTY"),** the **COUNTY** desires to make batterer's intervention education/counseling available to persons incarcerated in the Tarrant County Jail.

WHEREAS, the **COUNTY also** desires to make education/counseling available to persons participating in the Youthful Offender Diversion Alternatives (YODA) through the auspices of **MHMR OF TARRANT COUNTY.**

WHEREAS, the **COUNTY** has budgeted $100,000.00 for fiscal year 2026 from the Tarrant County General Fund for the provision of these two (2) programs.

WHEREAS the **COUNTY** finds that the consideration is adequate for this Contract with **MHMR OF TARRANT COUNTY** and that this undertaking is necessary for the benefit of the public; and

WHEREAS, MHMR OF TARRANT COUNTY desires and agrees to provide such services for a fee, and all parties mutually agree, and contract as follows:

1. The term of this contract shall be from October 1, 2025, through September 30, 2026.

2. **MHMR OF TARRANT COUNTY** agrees to provide batterer's intervention education/counseling to persons incarcerated in the Tarrant County Jail (Batterer's Intervention Program) as set forth in *Exhibits A In-Custody Batterer's Intervention Program), B Youthful Offender Diversion Alternative Group Counseling Program, and C.* Recidivism Rates of Domestic Violence.

3. The **COUNTY** shall pay to **MHMR OF TARRANT COUNTY** within thirty (30) days of receipt of the monthly invoices and programmatic reporting (see paragraph #6), for the provision of services pursuant to the agreement. The billings and reporting shall be received by the Judge of the County Criminal Court No. 5 by the 15th day of the month for the prior month during the contract term.. Under no circumstances shall the **COUNTY** paymore than $100,000.00 for services performed by **MHMR OF TARRANT COUNTY** related to the Batterer's Intervention Program and the YODA Program during the contract period. **MHMR OF TARRANT COUNTY** will receive payment only for those persons who receive **MHMR OF TARRANT COUNTY** services while incarcerated in the Tarrant County jail system
4. **MHMR OF TARRANT COUNTY** agrees to provide the **COUNTY,** upon thirty (30) days written notice, access to all records which in any manner relate to the programs detailed in Exhibits A, B and C with appropriate measures having been taken if needed to comply with applicable law regarding the confidentiality of medical and/or mental health information. Furthermore, the **COUNTY** reserves the right to audit those programs upon which these funds are expended.

5. **MHMR OF TARRANT COUNTY** shall maintain accurate programmatic and fiscal records regarding the services provided and funds expended and shall render to the **COUNTY** and the Judge of County Criminal Court No. 5, a detailed monthly report within fifteen (15) days after the expiration of each calendar month, detailing the manner of services provided and funds expended.

6. In the event **MHMR OF TARRANT COUNTY employs** any subcontractor to provide a service hereunder, it must require the subcontractor to comply with the requirements of paragraphs #4 and #5 above.

7. Either party may terminate this contract without cause by:

    i. Providing written notice to the other party at least thirty (30) days prior to the date of termination; and
    ii. Providing in the written notice the date of termination; and
    iii. Sending the written notice by certified mail return receipt requested to the party at itsaddress**.**

8. **MHMR OF TARRANT COUNTY** agrees that no member of the Board of Trustees of **MHMR OF TARRANT COUNTY,** no officer of **MHMR OF TARRANT COUNTY** and no staff member of **MHMR OF TARRANT COUNTY** may directly or indirectly receive any pecuniary interest from a contract entered into by **MHMR OF TARRANT COUNTY.** This paragraph shall not be construed to prevent the payments of salary for those persons who are employees of **MHMR OF TARRANT COUNTY.**

9. If there are any funds remaining unexpended and unencumbered at the conclusion of this contract, such funds may be re-appropriated at the **COUNTY'S** discretion.

10. This contract will be governed by the laws of the State of Texas without giving effect to conflict of law provisions or principles. Venue for any litigation related to or arising from this contract will be in the state or federal courts located in Fort Worth, Texas.

11. This contract shall not be interpreted to inure to the benefit of a third party not a party to this contract.This contract may not be interpreted to waive any statutory or common law defense, immunity, including governmental and sovereign immunity, or any limitation of liability, responsibility, or damage of any party to this contract, party's agent, or party's employee, otherwise provided by law.

12. NO FORM 1295 REQUIRED: **MHMR OF TARRANT COUNTY** acknowledges that it is a "governmental entity" and not a "business entity" as those terms are defined in Tex. Gov't Code § 2252.908, and therefore, no disclosure of interested parties pursuant to Tex. Gov't Code Section 2252.908 is required.

13. **MHMR OF TARRANT COUNTY** verifies that it does not boycott Israel and will not boycott Israel duringthe term of this contract. The term "boycott Israel" is defined by Texas Government Code Section 808.001, effective September 1, 2017. VENDOR further verifies that it is not engaged in business with Iran, Sudan, or any foreign terrorist organization. The term "foreign terrorist organization" means an organization designated as a foreign terrorist organization by the United States Secretary of State as authorized by 8 U.S.C. Section 1189.

14. **COMPLIANCE WITH LAWS.** In providing the services required by this Agreement, MHMR must observe and comply with all applicable federal, state, and local statutes, ordinances, rules, and regulations, including, without limitation, workers' compensation laws, minimum and maximum salary and wage statutes and regulations, and non-discrimination laws and regulations. City shall be responsible for ensuring its compliance with any laws and regulations applicable to its business, including maintaining any necessary licenses and permits.

SIGNED AND EXECUTED this_____day of_____

Tim O'Hare
County Judge

Bill E. Waybourn
Sheriff

Bradley Clark
Judge, County Criminal Court No. 5

Susan Garnett
CEO, MHMR of TARRANT COUNTY

APPROVED AS TO FORM:

Criminal District Attorney's Office

*By law, the Criminal District Attorney's Office may only approve contracts for its clients. We reviewed this document as to form from our client's legal perspective. Other parties may not rely on this approval, instead those parties should seek contract review from independent counsel.

CERTIFICATION OF FUNDS AVAILABLE FOR THE AMOUNT OF: $100,000.00

Auditor's Office

**Funds available for the contracts approved pursuant to this communication are $100,000.00 for this provider for education and counseling through 10000-2023/566021/4220500000. The total as a whole will not exceed this amount.

"Exhibit A"

IN-CUSTODY BATTERER'S INTERVENTION

PROGRAM DESCRIPTION

Problem Statement

Domestic violence offenders who serve their sentences in jail currently leave without any intervention aimed at addressing their behavior aside from the deterrent effect of imprisonment. Once a defendant has completed their incarceration time, the court has no further means to encourage self-reflection or facilitate behavioral change regarding domestic violence, nor to provide strategies for avoiding future incidents of violence.

Program Summary

The primary focus of this program is to prevent future violence against family members and intimate partners while also reducing recidivism among offenders. This program is available to individuals currently in custody for. Violent offenses. The target population includes full-time inmates as well as those who have been on probation and are incarcerated due to revocation. There may be various issues leading to probation revocation, but a common reason is the failure to complete a required community-based Batterer's Intervention Program (BIP). For revoked offenders, being in custody can motivate them to complete this essential program.

During class sessions Offenders will be held accountable for the emotional, social, and economic costs of their actions. Merely serving time in jail does not equip them with the skills necessary to prevent future violent behavior. These services will be delivered using modalities that have shown themselves to be effective in reducing re-offending rates and reducing the risk of future harm.

The program is based upon using Narrative therapy/practices which are effectively applied to group settings with domestic violence offenders by focusing on the stories individuals tell about themselves and their actions. In this approach, participants are encouraged to express and examine their narratives, which helps them understand their behavior within a broader social context. By exploring the stories, they tell about themselves, offenders will gain insight into how societal norms, cultural narratives, and past experiences influence their actions. This contextual understanding allows them to recognize that their behaviors do not exist in isolation but are shaped by larger societal factors.

Offenders will critically analyze the cultural messages they have absorbed about masculinity, power, and relationships. By deconstructing these norms, they will begin to challenge harmful beliefs that support violent behavior, which paves the way for healthier interactions.

Family systems theory will be effectively applied in the domestic violence offender group by addressing the family dynamics that contribute to abusive behaviors. This approach helps offenders gain insight into the complexities of their family relationships, particularly regarding their histories of trauma and experiences of abuse. By doing so, it fosters personal responsibility and promotes healthier behaviors within their families.

The primary aim of this program is to blend practical elements of traditional Batterer Intervention Programs (BIP) with strength-based and therapeutic approaches such as Solution Focused and Narrative, and Family Systems Theory practices. This combination encourages participants to critically reflect on their behavior. By fostering a collaborative environment, the program helps reduce defensiveness and denial, which enhances participants' engagement and motivation to change. It creates space for critical reflection while holding participants accountable for their actions. Additionally, the program provides resources aimed at preventing future violence against family members and

intimate partners. Other objectives include reducing jail costs and expanding sentencing options.

Activities

The program will be offered to domestic violence offenders in custody at the Tarrant County Jail who are willing to participate voluntarily. Its focus is to provide group psychoeducation and therapeutic conversations aimed at preventing future domestic violence. The program will closely adhere to the recommended standards and curriculum topics outlined in the TDCJ-CJAD and the Texas Council on Family Violence's Battering Intervention and Prevention Project Guidelines. Program services for offenders will also consist of distinct processes for intake, assessment, referral and linkage to community support, and orientation.

The topics covered include the nature of domestic violence, non-violent conflict resolution, changes in attitudes and beliefs, trauma, and strategies for maintaining non-abusive behavior. Additionally, the discussion encompasses the impact of substance abuse and mental illness on domestic violence and the importance of developing accountability for change by focusing on oneself and understanding how one's anxiety affects the family system.

Other topics include deconstructing social narratives that contribute to relationship violence, healthy methods for managing anxiety, stress, and anger, fostering healthy relationships, and practicing effective communication. Child-centered parenting, the effects of parental violence on children, substance use and misuse, and recognizing signs of safety are also emphasized. Lastly, themes that arise during goal-setting conversations will be explored further.

The curriculum will consist of ten (10) modules that run consecutively and will be offered continuously. This approach allows inmates to begin the program at any point and complete all modules before their release. The program will be available in both English and Spanish.

Appropriate administrative functions will include administrative, financial, and clinical supervision,internal program assessment and evaluation, quality assurance, and output/outcome monitoring.

Objectives/Strategies

1. *Objective:* All eligible offenders will be contacted and encouraged to participate in the program *Strategy:* Program supervisor will function as liaison to the court and assign work/follow-up to BIP counselor as required.

2. *Objective:* Assess all offenders referred for domestic violence related issues and screen for mental health/substance abuse problems
   Strategy: A process for conducting assessments, appropriate instruments and a supporting schedule will be assigned to the BIP staff by the program supervisor.

3. *Objective:* Make referrals related to offender identified needs and ongoing support
   Strategy: The BIP counselor will maintain a list of community resources and make referrals based on the offender's unique needs.

4. *Objective:* Provide batterer's intervention services within a framework of standards designed to hold offenders accountable for their behavior and stimulate behavior change *Strategy:* The "Battering Intervention and Prevention Project Guidelines" (TDCJ- TCFV) will be used as an implementation fidelity instrument and program implementation will be monitored every 180 days.

5. *Objective*: Provide follow-up on recidivism at 90-day, 180-day, and 1-year intervals
   Strategy: Demographic data collected on intake will be used to compare with criminal justice data at various points in time in order to determine recidivism rates. Reduced recidivism rates will be judged to be indicative of behavior change in the offender. Other data collected on intake will be used to investigate

correlations with offender characteristics and used to guide revisions in program service delivery strategies.

6. *Objective:* Provide linkages/collaboration with internal and community stakeholder organizations *Strategy:* A "Steering Committee" of key stakeholders, who will be appointed by Tarrant County Criminal Court #5 Judge will meet quarterly to insure BIP operations are meeting expectations and are integrated into the network of domestic violence stakeholders. A monthly coordination meeting between Tarrant County Criminal Court #5 and the BIP staff will be held. Program administrative staff and BIP counselor will establish and maintain identified linkages to needed referral resources.

7. *Objective:* Provide training/information to internal and community stakeholders/organizations *Strategy:* Program administrative staff and BIP counselors will provide information/technical assistance/training to all interested stakeholders. At least one community-based or internal networking/training event per year is required. Documentation of the event will be maintained.

Requirements of Tarrant County

1. Financial: Tarrant County will provide funding for the program through a contract identifying the annual budget.

2. Direct Services: MHMR OF TARRANT COUNTY will provide a BIP program in the Tarrant County Jail based on the "Batterer's Intervention and Prevention Project Guidelines" (TDCJ-TCFV). One full-time counselor and associated administrative/program support will be added to current MHMR OF TARRANT COUNTY Forensic Services unit staff.

3. Tarrant County Criminal Courts provide referrals of offenders suitable for the BIP program and assistance with monitoring data related to recidivism.

4. Tarrant County Sheriff's Department will provide opportunity, inmate movement, space and security sufficient to conduct BIP group meetings.

Outputs:

1. MHMRTC will provide monthly summary of attendance.
2. MHMRTC will provide the court with monthly reports.
3. MHMRTC will provide the courts with yearly reports.
4. MHMRTC will track recidivism rates at 60, 90, 180, and 365 Day intervals.

"Exhibit B"

YOUTHFUL OFFENDERS' DIVERSION ALTERNATIVE GROUP COUNSELING

Program Description

Program Statement

Group counseling and skills training aim to help defendants stabilize their lives and access resources that encourage personal development. This program is strengths-based, focusing on the positive efforts made by defendants to change their circumstances and pursue better life paths. Successfully participating in the program may lead to dismissal of charges.

Project Summary

Youthful Offenders Diversion Alternative (YODA) is a program designed as an alternative to standard pre-trial diversion programs for Violent offenses. It provides counseling and case management for youthful offenders aged 17 to 25 who have been arrested for assaulting a non-intimate family member, defined as a blood relative or someone related by marriage or intimate relationship.

The program is managed by a licensed therapist with a master's degree and specialized training in trauma and abuse. The primary goal of YODA is to ensure that domestic violence offenders are held accountable for their actions while receiving support aimed at preventing future violence against family members and intimate partners.

There is a need to propose an effective, evidence-based, and time-efficient therapeutic model for offenders. If change and safety can be established more quickly than through traditional psycho-educational approaches, it would be ethical and appropriate to utilize strength-based methods to support participants sooner rather than later. Through counseling and case management, YODA aims to develop solutions and skills that address the factors contributing to offenses. Additional goals include reducing jail costs, providing diversion options for offenders, and decreasing violence within the community.

Target Group

Youthful Offenders Diversion Alternative (YODA) serves people who have been charged with a crime of Domestic Violence of a non-intimate partner. The age range for this program is 17-25.

Activities

The Youthful Offenders Diversion Alternative (YODA) program will refer individuals who meet the established participation criteria. Before joining the group, each proposed member will undergo an intake assessment, followed by a midterm evaluation and a closing session. Participants will attend between 16 and 20 group sessions. Additionally, MHMR of Tarrant County will provide weekly case consultations to the YODA Clinical Case Manager.

The nature of this group will follow a strength-based approach, incorporating elements of Family Systems Theory, Cognitive-Behavioral Therapy, Solution-Focused techniques, and Narrative practices. The primary goal is to support clients in developing self-determined goals and envisioning non-violent futures. One of the key benefits of the group setting is that participants will support and hold each other accountable for attendance and active engagement in the process.

This therapeutically oriented group format provides opportunities for change and growth that go beyond typical psycho-educational groups. Members will be encouraged to engage in appropriate self-disclosure, discussing events from the previous week and their responses to those events. This interaction with both the therapist and other group members fosters a sense of community, emphasizing that members are not alone in their efforts to overcome violence.

Group members, along with the therapist, will offer feedback, encouragement, support, and constructive criticism. They can share their own experiences and solutions to similar challenges. The input received during group sessions can help members become aware of maladaptive behavior patterns, shift their perspectives, and develop more constructive and effective ways to resolve issues in their relationships.

Common themes and topics for the group will include developing accountability for change with a focus on the self, understanding the impact of anxiety on family dynamics, deconstructing social narratives that contribute to relationship violence, managing anxiety, stress, and anger in healthy ways, fostering effective communication, addressing trauma and abuse, and exploring mental health and substance use/misuse. Additional themes may emerge during goal-setting discussions.

Objectives/Strategies

1. Objective: Provide Counseling and skills training within a framework of standards designed to hold offenders accountable and stimulate behavior change.
   Strategy: Strengths-based and solutions-oriented program; whereby, defendants will establish goals to help them move their lives away from future criminality and violence.

2. Objective: Make referrals related to identified offender needs and ongoing support
   Strategy: The Counselor will maintain a list of Community resources and make referrals based upon the offender's unique needs.

3. Objective: Provide follow-up on recidivism at 90-day, 180-day, and 1-year intervals
   Strategy: Reduced recidivism rates will be judged to be indicative of behavior change in the offender. Other data collected on the intake will be used to investigate correlations with offender characteristics and used to guide revisions in program service delivery strategies.

Inputs

1. Financial Services: Tarrant County will provide funding for the program through a contract identifying the annual budget.

2. Direct Services: MHMR of Tarrant County will provide counseling for the Programs participants.

3. Referral Services: The Clinical Case Manager of the YODA Program will provide referrals of offenders suitable for counseling and skills training.

4. Program Services: Tarrant County will provide opportunity, space, and security sufficient to conduct group and individual meetings.

Outputs:

1. MHMRTC will provide monthly summary of attendance
2. MHMRTC will provide the court with monthly reports.
3. MHMRTC will provide the courts with yearly reports.
4. MHMRTC will track recidivism rates at 60, 90, 180, and 365 Day intervals.

"Exhibit C"

Recidivism Rates of Domestic Violence Charges 1 year from Release

A. Between September 1, 2019, until August 31, 2024, Batter's Intervention:

Number of Participants	627
Number of classes held	674
Number of completions	512
Completion Percentage	82%
Number of participants with recidivism	23
Total Recidivism	3.6%
Total success rate	96.4%

B. Fiscal Year 2023-2024

Number of Participants	172
Number of completions	146
Completion Percentage	84.88%
Number of participants with recidivism	5
Total recidivism of those that participated in the program	2.91%
Total success rate	97.09%

C. Comparable Rates Nationally

https://pubmed.ncbi.nlm.nih.gov/16672737/

The relative effectiveness of two interventions for dealing with 200 court-referred spousal abusers is examined.

a. The overall failure rate is 17.5%, with most recidivism occurring during the first 6 months after treatment.

b. Offenders who completed a 14-week group treatment program called SAFE manifest significantly lower rates of recidivism (10.6%) than do offenders who did not complete the mandated treatment (38.8%).

c. Some high-risk clients are referred to a cognitive restructuring treatment program called R&R, and those completing both programs (despite their high-risk status) have a recidivism rate of only 23.5%.

TARRANT COUNTY
COMMISSIONERS COURT COMMUNICATION

Court Date: December 9, 2025	**Court Order #:**	**Page:** 1 of 3
Department: District Attorney	**Prepared By:** Polly Maxwell	**Approved By:** Mark Kratovil, Assistant District Attorney

SUBJECT:

Consideration of Memorandum of Understanding between Tarrant County, d/b/a Tarrant County Criminal District Attorney's Office and Tarrant County College District for Use of the Firing Range

***** CONSENT AGENDA *****

COMMISSIONERS COURT ACTION REQUESTED

It is requested that Commissioners Court consider the approval of a Memorandum of Understanding between Tarrant County d/b/a Tarrant County Criminal District Attorney's Office and Tarrant County College for use of the firing range at the college.

BACKGROUND

Investigators employed by the Tarrant County Criminal District Attorney are required to maintain firearms proficiency and periodic training. Tarrant County College District operates an indoor firearms firing range that, due to its scheduling availability and proximity to the Criminal District Attorney's Office, minimizes the amount of time that investigators are away from the office. In addition, because the range is an indoor range, rescheduling training due to rain or inclement weather is also minimized.

Current rates charged for use of the Tarrant County College Firing Range are $500.00 per day or $250.00 per half-day and are subject to change by the Tarrant County College Board. The Criminal District Attorney's Office anticipates a total of four (4) full days of training per year will be needed for investigators. In fiscal year 2025, the District Attorney's Office spent $2,000.00 for use of the firing range.

With approval of the MOU, the Criminal District Attorney's investigators will maintain firearm proficiency.

The Criminal District Attorney's Office has reviewed and approved the Memorandum of Understanding.

FISCAL IMPACT

Tarrant County Criminal District Attorney agrees to pay Tarrant County College $500 per day for use of the Tarrant County College Firing Range. In addition, other miscellaneous training courses are offered and billed individually by class. Funds are available in account D8700-2026 Forfeiture Fund/4510400000 Investigations/522035 Range Supplies.

PASSED AND APPROVED on December 9, 2025.

COUNTY OF TARRANT

STATE OF TEXAS

By: Separate Electronic Signature Page
Tim O'Hare
County Judge

APPROVED AS TO FORM:

_____
District Attorney's Office*

*By law, the District Attorney's Office may only approve contracts for its clients. We reviewed this document as to form from our client's legal perspective. Other parties may not rely on this approval. Instead, those parties should seek contract review from independent counsel.

Attachments

12-16-25 Firing Range 2026.pdf

Tarrant County College
Northwest Campus

Northwest Campus; 4801 Marine Creek Parkway; Fort Worth, Texas 76179-3599 / (817) 515-7573

2026 – 2028
Firing Range
Memorandum of Understanding

The following is a **MEMORANDUM OF UNDERSTANDING** (MOU) between the Tarrant County College - Firing Range (WPFR) and the Tarrant County Criminal District Attorney's Office (TCCDAO). The purpose of this MOU is to enter into an agreement for the TCCDAO to perform Firearms Training and qualifications at the WPFR Facility.

Firing Range Use Payment

☐ The _____ PD/Federal Agency will pay for the use of the firing range by cash, check, or credit card at the current 4-hour fee amount.

☒ The Tarrant County Criminal District Attorney's Office will be billed utilizing the information provided on the Billing Letter of Agreement (BLA) at the current 4-hour fee amount. (Prices subject to change by TCC College Board)

Payment will be made by check. Invoice shall be sent to the Tarrant County Criminal District Attorney's Office:

Ann Durfee, Chief of Operations
Criminal District Attorney's Office
401 West Belknap St., 4th Floor
Fort Worth, TX 76196
Tel: 817-884-1694

☐ The _____ PD will pay for the use of the firing range utilizing the agencies banked exchange time at an exchange rate of 2:1. If at any point the _____ PD does not have an adequate amount of exchange time to pay for the firing range use, it will then pay for the use of the facility at the current 4 hour fee amount.

☐ The _____ PD/Federal Agency has a contract (Multi-Year) or some other quid pro quo arrangement with the Firing Range.

Training/Qualification Dates: January 1, 2026 to December 31, 2028

Allowed Course Numbers and Titles:

2055 Firearms Training
3326 Patrol Rifle In-service Training (Not 3322)
Or Any other Course number agreed upon by Agency and Rangemaster.

TCCD – FIRING RANGE WILL:

1. Allow only Commissioned Peace Officers/Agents and Honorably Retired Peace Officers/Agents of the TCCDAO to shoot all weapons issued by the TCCDAO and all weapons approved by the Firearms Training Division of the TCCDAO.

Tarrant County Criminal District Attorney's Office WILL:

1. If applicable, submit a completed roster to TCOLE for all courses of fire taught on the firing range, with the exception of annual qualification requirements set forth by TCOLE.

2. Maintain a permanent record in each officers training file for officers' participation in range training or qualification, as well as maintain a record of all lesson plans, learning objectives, and instructor credentials for all courses taught.

3. Complete TCC Continuing Education registration forms and/or Firing Range Sign-In Sheet for each commissioned peace officer/agent and each honorably retired peace officer/agent shooting on the firing range.

4. Train/Qualify only officers/agents commissioned by their agency or honorably retired from their agency unless otherwise approved by the TCC – WPFR Rangemaster.

5. Not conduct Firearms Instructor #2222, Patrol Rifle Instructor #3323, Patrol Rifle #3322 or any other course in direct competition with the Firing Range - WPFR In-Service courses unless expressed written consent has been obtained from the Firing Range – Lead Coordinator – Rangemaster.

GENERAL GUIDELINES:

The TCCDAO understands that they will have to coordinate and schedule all training dates with the TCCD – WPFR Lead Coordinator – Rangemaster. The TCCDAO will comply with all rules, regulations, and policies of the Firing Range (WPFR). The signature of the undersigned indicates agreement with, and acceptance of, these requirements.

Signature:

Phil Sorrells: _____ Date: 11-18-25
Criminal District Attorney, Tarrant County Criminal District Attorney's Office

Christopher LaChance: _____ Date: 11/19/2025
Assistant Chief Investigator Training Coordinator, Tarrant County Criminal District Attorney's Office

Adam Bush: _____ Date: 11/17/2025
Lead Coordinator II - Rangemaster, Police Firing Range, (WPFR)

TARRANT COUNTY
COMMISSIONERS COURT COMMUNICATION

Court Date: December 9, 2025	**Court Order #:**	**Page:** 1 of 7
Department: District Attorney	**Prepared By:** Polly Maxwell	**Approved By:** Mark Kratovil, Assistant District Attorney

SUBJECT:

Receive and File the Tarrant County Adult Sexual Assault Response Team Biennial Report

***** CONSENT AGENDA *****

COMMISSIONERS COURT ACTION REQUESTED

It is requested that the Commissioners Court consider the receipt and filing of the Tarrant County Adult Sexual Assault Response Team (SART) biennial report.

BACKGROUND

On December 14, 2023, the Commissioners Court, through Court Order #137002, approved the establishment of SART pursuant to Texas Local Government Code Section 351.252. Current members of SART as mandated by statute and appointed by the Commissioners Court include representatives from The Women's Center, the Tarrant County Criminal District Attorney's Office, John Peter Smith Hospital, the Tarrant County Sheriff's Office, Tarrant MHMR, the Fort Worth Police Department, and the Arlington Police Department.

Pursuant to Texas Local Government Code Section 351.257, SART is required to provide a biennial report to the Commissioners Court which contains the following information: 1) a list of response team members able to participate in quarterly meetings; 2) a copy of the written protocol; and 3) a biennial summary detailing the number of sexual assault reports, investigations, indictments, and cases where no indictment was presented or an explanation as to why this information could not be provided. The report must be presented to Commissioners Court no later than December 1st of each odd-numbered year.

Additionally, once the Court receives and files the Report, Local Government Code Section 351.257(b) obligates the Commissioners Court to send the report to the Sexual Assault Survivors' Task Force no later than February 1, 2026. If approved, the County Administrator's Office will send the report to the Sexual Assault Survivors' Task Force on behalf of the Commissioners Court.

FISCAL IMPACT

There is no fiscal impact associated with this item.

Attachments

2025 SART Biennial Report Updated .pdf

DECEMBER 1, 2025

TARRANT COUNTY SART

ADULT SEXUAL ASSAULT RESPONSE TEAM

TARRANT COUNTY SART

CONTENTS:

EXECUTIVE SUMMARY 2023–2025.....3

- PRESIDING OFFICER – Kelly Goodwin, The Women's Center.....4
- FORENSIC NURSE – Priscilla Kenyon, SANE, John Peter Smith Hospital.....4
- CHIEF ADMINISTRATOR – Deborah Caddy, The Women's Center.....4
- PROSECUTOR – ACDA Darren De La Cruz, Tarrant County CDA.....4
- FORT WORTH POLICE DEPT – Sgt. Bradley Cantu.....4
- ARLINGTON POLICE DEPT – Sgt. Clay Taylor.....4
- TARRANT COUNTY SHERIFF'S OFFICE – Ruben Quesada.....4
- BEHAVIORAL HEALTH PROVIDER – Ellen Goodman, Tarrant County MHMR.....4

SART ACTIVITIES AND TRAININGS.....6

Meeting and Educational Objectives.....7

Quarterly Meetings:

- October 19th, 2023.....9
- January 18th, 2024.....12
- April 24th, 2024.....15
- July 24th, 2024.....17
- October 23rd, 2024.....19
- January 22nd, 2025.....23
- April 23rd, 2025.....26
- July 23rd, 2025.....28

DATA AND FINDINGS.....31

CASE EVALUATION.....42

SART PROTOCOLS.....46

SECTION 1

EXECUTIVE SUMMARY

Executive Summary: Tarrant County Sexual Assault Response Team (SART) 2023-2025

Tarrant County continues to lead Texas in its coordinated, survivor-centered response to sexual assault. Since the 1980s, our Sexual Assault Response Team has demonstrated the power of multi-agency collaboration. With the passage of SB 476 in 2021 mandating SARTs statewide, Tarrant County reaffirmed its commitment to excellence by refining its goals, expanding its membership, and enhancing its protocols to better serve survivors.

Our core team includes representatives from advocacy, law enforcement, prosecution, forensic nursing, and behavioral health. We have expanded participation across the county, ensuring representation from agencies of all sizes. This inclusive approach has strengthened our quarterly meetings and enriched our collaborative efforts.

Our Executive Members are:

- PRESIDING OFFICER – Kelly Goodwin, The Women's Center
- FORENSIC NURSE – Priscilla Kenyon, SANE, John Peter Smith Hospital
- CHIEF ADMINISTRATOR - Deborah Caddy, The Women's Center
- PROSECUTOR - ACDA Darren De La Cruz, Tarrant County Criminal District Attorney's Office
- FORT WORTH POLICE DEPT - Sgt. Bradley Cantu
- ARLINGTON POLICE DEPT - Sgt. Clay Taylor
- TARRANT COUNTY SHERIFFS OFFICE – Ruben Quesada
- BEHAVIORAL HEALTH PROVIDER - Ellen Goodman, Tarrant County MHMR

Tarrant County SART has launched and expanded several key initiatives:

Project Endure: We continue to improve and expand services to survivors. Project Endure includes pre-trial support groups, transportation services, and post-trial mental health referrals. Survivors receive trauma-informed counseling and courtroom accompaniment, with support from the Women Center, Project Beloved, One Safe Place, and others.

Trauma-Informed Training: We've delivered targeted training on trauma-informed policing, interviewing, and survivor advocacy, reaching hundreds of professionals across law enforcement, healthcare, and legal sectors.

Advocacy: Professional on-site advocates provide consistent, immediate support to survivors during forensic exams, improving both survivor experience and coordination with medical staff. Survivors also have the option to have an advocate present with them during police interviews so that they feel supported during the interviews.

Forensic Nursing: Forensic nurses continue to improve their treatment of survivors and are completing comprehensive exams. Strangulation exams and advanced photographic documentation ensure comprehensive care for survivors of intimate partner violence and sexual assault.

Legislative Response and Education: Our newsletter and training programs have disseminated critical updates on new laws affecting survivors, helping agencies stay informed and compliant.

SART meetings remain an active space for cross-disciplinary discussion. Forensic labs, prosecutors, nurses, victim advocates, and law enforcement share updates, troubleshoot challenges, and refine protocols. These conversations have led to improvements in evidence collection, case preparation, and survivor engagement.

We have also prioritized data-driven accountability. Our case evaluations have identified gaps and successes, guiding our strategic planning. We are committed to using these insights to improve survivor outcomes and agency performance.

Looking Ahead to 2026:

We are proud of the steps we have taken, but there is still more work to be done. We believe that doing better makes the community better, and we remain committed to growth. As a group, we are moving toward a more data driven approach to understanding sexual assault in our community to better investigate and prosecute sexual assault while helping survivors find justice and healing.

Our goals include:

- SART working with crime analysts to identify patterns and emerging concerns
- SANE Nurses tracking medical and forensic trends
- Advocates highlighting the broader impact of these crimes on survivors and our community
- Expanding community-based prevention and education programs
- Leveraging technology to streamline survivor services and evidence tracking
- Enhancing advocate training
- Continuing to serve as a model for other counties

These goals allow us to better understand the scope of sexual violence, tailor our interventions, and measure our progress. We are proud to report that more cases are being filed with the Tarrant County Criminal District Attorney's Office. This trend is a sign that survivors are being heard, investigations are improving, and our systems are working. Tarrant County SART remains a beacon of innovation, compassion, and collaboration. We are proud of how far we have come, and we are determined to keep moving forward.

SECTION 2

SART ACTIVITIES AND TRAININGS

SART ACTIVITIES AND TRAININGS

Meeting and Educational Objectives:

- Improve Services and Responses to Survivors and those Impacted by Sexual Violence
- Increase Awareness on Sexual Violence
- Inform and Shape Community Response
- Provide Education on Best Practices to Team Members
- Strengthen Collaboration between Participating Agencies

Quarterly Meetings:

October 19, 2023

- Guest Speaker/Education: *Drug Facilitated Sexual Assault*, Dr. Robert Johnson Ph.D., F-ABT - Chief Toxicologist, Tarrant County Medical Examiner's Office

January 18, 2024

- Guest Speaker/Education: Case Review-Sexual Assault at Crystal Canyon Park, Arlington, TX Sgt. Tim Pinckney, Arlington PD Sex Crimes Unit

April 24, 2024

- Guest Speaker/Education: Trauma Informed Response to Sexual Assault, Chelsea Davis, LMSW, Trauma Trainer, The Women's Center of Tarrant County

July 24, 2024

- Guest Speaker/Education: *Adult S/A Case Review- Darren DeLaCruz, Tarrant County District Attorney's Office, Adult S/A Unit*

October 23, 2024

- Guest Speaker/Education: When Sexual Assault Occurs from an Intimate Partner, Beth Maeker and Sonia Sims, Texas Health Resources

January 22, 2025

- Guest Speaker/Education: Human Trafficking Resources and Services, Ty Bowden, Associate Director of The Net

April 23, 2025

- Guest Speaker/Education: Adult S/A Case Review: Darren DeLaCruz & Stephanie Simpson, TCDA Adult S/A Unit

July 23, 2025

- Guest Speaker/Education: Lauren Lawrence, Assistant Criminal District Attorney & Legislative Liaison; Subject: 89th Legislative Updates

October 22, 2025

- Guest Speaker/Education: Sexual Assault Within Intimate Partner Violence, Katharine Collier Esser, The Women's Center

TARRANT COUNTY SART

4th Quarter SART Meeting

Date of meeting: October 19th, 2023 @ 11:30 am

Location– The Women's Center of Tarrant County

Presiding Officer - Connie Housley, JPS Forensic Nursing

Facilitator/Minutes: Alisha Mathenia, TWC

4th Quarter SART Minutes

Order of Business:

Approval of July 2023 Minutes

- All in favor, none opposed or abstained.

Introductions:

- See sign-in list for attendee information.

Announcements/Agency Updates:

- TCDA-Sexual Assault Unit: Commissioner Court numbers are due by November 1st, Kim will follow up if they are outstanding. Currently revamping law enforcement sexual assault packet to minimize pages.
- Grapevine PD: Now has one full time Victim Advocate
- Tarrant County Jail: A national inmate survey will be conducted inhouse by the Bureau of Justice
- TCU: New full-time advocate added to department
- TCME: New instruments for DNA extraction procedure have been acquired to assess for Y screening

Program: *Drug Facilitated Sexual Assault*, Dr. Robert Johnson Ph.D., F-ABT - Chief Toxicologist, Tarrant County Medical Examiner's Office

- Next Meeting: Thursday, January 18th 2024

Attendees

Sign-In Sheet

4th QUARTER MEETING
Date: October 19, 2023

New attendees please place * beside your email
If you're receiving the meeting notices no need to add

Name (please print)	Signature	Agency	Title	E-Mail
Brandi Howard	[signature]	Mansfield	Detective	brandi.howard@mansfieldtexas.gov
Cindy Burnette	Cindy Burnette	THR	SANE director	cindyburnette@texashealth.org
Amanda Amore	[signature]	TXFNE	Clinical Manager	amanda@txfne.com
Meagan Lewis	[signature]	TXFNE	RN	meagan@txfne.com
Kira Monthie	Kira Monthie	TCME	analyst	KTmonthie@tarrantcountytx.gov
Ty Stillman	[signature]	Bedford PD	Sergeant	Tyler.Stillman@bedfordtx.gov
Stephanie Buhrke	S Buhrke	Bedford	investigator	stephanie.buhrke@bedfordtx.gov
Lasedric Johnson	[signature]	Bedford	Detective	Lasedric.Johnson@Bedfordtx.gov
Kelly Goodwin	Kelly Goodwin	TWC	Hospital Advocate	
Priscilla Kenyu	[signature]	FNE JPS	JPS	
Monica Lugo	[signature]	TCSO	PREA Manager	Mlugo@tarrantcountytx.gov
Kristen Hammonds	K Hammonds	TCME	CODIS Admin	kthammonds@tarrantcountytx.gov
Robert Johnson	[signature]	TCME	Chief toxicologist	rdjohnson@tarrantcounty.com
Jody Klann	[signature]	TCME	Crime LD	jlklann@tarrantcountytx.gov
Vivianne Rocha	[signature]	GPD	GPD Coordinator	vivianne.rocha@mavs.uta.edu
Darren DeLacruz	[signature]	DA's office	ADA	dsdelacruz@tarrantcountytx.gov
Heather Kramer	[signature]	TCME	DNA	
Brad Cantu	[signature]	FWPD	Sergeant	bradley.cantu@fortworthtexas.gov

Name (please print)	Signature	Agency	Title	E-Mail
Jaylynn West	[signature]	TCU - CARE	Advocate	jaylynn.west@tcu.edu
Uvonne Alexander	[signature]	TCME DMA Unit	Tech Lead	ufalexander@
Stephanie Beard	[signature]	BPD	VAC	
Brian Oltorov	[signature]	BPD	Det. Sgt.	lasZscatcounty
Shelby Hopson	[signature]	FWPD	VAC	txgov
Clarissa Padron	[signature]	Grapevine PD	Advocate	cpadron@grapevinetexas.gov
Leen Bavakat	[signature]	Grapevine PD	Intern	Lbb0672@mavs.UTA.edu
Sara Hyde	[signature]	NRH PD	Detective	shyde@nrhtx.com
Alisha Mathenia	[signature]	TWC	Advocate	amathenia@womenscenterfc.org
Connie Hugh	[signature]	JPS	JPS Medical	

Name (please print)	Signature	Agency	Title	E-Mail
Leah Carnahan	[illegible]	TCU CARE	Advocate/Ask Diva	l.carnahan@tcu.edu
Cody Brock	[illegible]	NRH PD	Det	cbrock@nrhtx.com
Ellen Goodman	Ellen Goodman	MHMR Tarrant/BAA	Program Director/ Child Liaison	ellen.goodman@mhmrtc.org
Nick Garcia	[illegible]	Colleyville PD	Detective	ngarcia@colleyville.com
Samantha King	[illegible]	Colleyville PD	Detective	SKing@colleyville.com
Judy Jeanes		JPS SANE		
Sonia D Sims	[illegible]	THH	SANE Mgr	soniasims@texashealth.org
Stacey Henley	Stacey Henley	Cook Childrens	Nurse Mgr	stacey.henley@cookchildrens.org
Tracy Matheson	Tracy Matheson	Project Beloved	president	tracy@projectbeloved.org
Deborah Caddy	Women's Center	Deborah Caddy	Director	dcaddy@womenscentertc.org

TARRANT COUNTY SART

1st Quarter SART Meeting

Date of meeting: January 18th, 2024 @ 11:00 am

Location– The Women's Center of Tarrant County

Presiding Officer - Connie Housley, JPS Forensic Nursing

Facilitator/Minutes: Alisha Mathenia, TWC

4th Quarter SART Minutes

Order of Business:

Approval of October 2023 Minutes

- All in favor, none opposed or abstained.

Introductions:

- See sign-in list for attendee information.

Announcements/Agency Updates:

- TWC, JPS, THR, Cook's, TCDA, TXFNE, TCSO, PDs-Presentation of 2023 data
  - Connie will send a link to SART report in upcoming newsletter
- TCSAAC Conference-April 25th & 26th at Lena Pope
- TCU-Second advocate fully trained, will announce upcoming SAAM events
- THR-3 full time SANEs, 7 PRN staff, more in training; proposal of community plan for repeat patients; continuation of pilot program for IPV/strangulation cases at THRFW
- UNT-Upcoming testing of cold cases for CODIS information

Program: *Case Review-Sexual Assault at Crystal Canyon Park, Arlington, TX* Sgt. Tim Pinckney, Arlington PD Sex Crimes Unit

- Next Meeting: Thursday, April 18th 2024

Attendees

SART Tarrant County
Sign-In Sheet

1st Quarter SART Meeting

Date: January 18, 2024

New attendees please place * beside your email
If you're receiving the meeting notices no need to add

Name (please print)	Signature	Agency	Title	E-Mail
Connie Housty	[illegible]	JPS	Forensic Nurse Mgr	Chorsley@JPSHealth.org
Cindy Burnette	[illegible]	THR	Forensic Nurse	Cindyburnette@texashealth.org
Beth Macker	[illegible]	THR	Forensic Nurse	Marymacker@texashealth.org
Melissa Pearce	[illegible]	BPD	Victim Advocate	mpearce@burlesontx.com
Clay Taylor	[illegible]	Arlington PD	Violent Crime Sgt	Clayton.Taylor@Arlingtontx.com
Monica Lugo	[illegible]	TCSO	PREA Manager	mlugo@tarrantcountytx.gov
Cody Brock	[illegible]	NRH PD	Detective	cbrock@nrhtx.com
Jared Salzman	[illegible]	Fort Worth PD	Lieutenant	Jared.Salzman@fortworthtexas.gov
Sonia D Sims	[illegible]	THR	Forensic Mgr	soniasims@texashealth.org
Stacey Henley	[illegible]	Cook Childrens	Forensic Nurse	Stacey.henley@cookchildrens.org
Tracy Matheson	[illegible]	Project Beloved	President	tracy@projectbeloved.org
Alisha Mathews	[illegible]	TWC	Advocate	amathews@womenscentertc.org

Name (please print)	Signature	Agency	Title	E-Mail
Brandi Howard	[illegible]	Mansfield P.D.	Detective	brandi.howard@mansfieldtexas.gov
Uvonna Alexander	[illegible]	TCME BWA	TL	ufalexander@tarrantcountytx.gov
Melissa Haas	[illegible]	UNTCHI	Lab Director	melissa.haas@unthsc.edu
Nancy Philip	[illegible]	Hurst PD	Victim Assistance	nphilip@hursttx.gov
Ashley Mason	[illegible]	Womens Center	Hospital Advocate	amason@womenscentertc.org
Tim Pinckney	[illegible]	Arlington P.D	Sex Crimes Sgt	tim.pinckney@arlingtontx.gov
Stephanie Simpson	[illegible]	TCCDA	ADA	sksimpson@tarrantcountytx.gov
Darren DeLaCruz	[illegible]	TCCDA	ADA	dsdelacruz@tarrantcountytx.gov
Moriah Garcia	[illegible]	Grapevine PD	intern w/ victim services	mjm6801@mavs.uta.edu
DEBORAH CADDY	[illegible]	Women's Center	Prog. Director	dcaddy@womenscentertc.org

Name (please print)	Signature	Agency	Title	E-Mail
Angela Thompson	[illegible]	Fleet + Family	SAPR VA	Angela.L.Thompson So.naf@us.navy.mil
Khara Breeden	[illegible]	TXFNE	CEO	Khara@txfne.com
Shelby Tyler	[illegible]	TXFNE	RN	Shelby@TXFNE.com
Heather Kramer	[illegible]	TCME	Sr. Forensic Biologist	hmkramer@tarrantcountytx.gov
[illegible]	[illegible]	Burleson PD	Sgt	[illegible]
Kelly Holland	[illegible]	TCSO	Det.	kkholland@tarrantcountytx.gov
Brad Cantu	[illegible]	FWPD	Sgt.	bradley.cantu@fortworthtexas.gov
Sara Hyde	[illegible]	NRHPD	Det	shyde@nrhtx.com
R. Wayne McEachran	[illegible]	NRHPD	Sgt	rmceachran@nrhtx.com
Carina Robinson	[illegible]	TXARNG	SARC	carina.m.Robinson.civ@army.mil
Leah Cornahan	[illegible]	TCUCARE	Ast. Director/Advocate	l.cornahan@tcucare
Maryannen Ramirez	[illegible]	TCSO	VAC	m.ramirez@tarrantcountytx.gov
Nieachia Wherry	[illegible]	ANG	SAPR VA	Nieachia.l.wherry.civ@Army.mil
Judy C. Jeches	[illegible]	JPS SANE		jthompol@jpshealth.org

April 24, 2024 **Minutes**

TARRANT COUNTY SART

2nd Quarter SART Meeting

Date of meeting: April 24th, 2024 @ 2:00 pm

Location– The Women's Center of Tarrant County

Presiding Officer - Connie Housley, JPS Forensic Nursing

Facilitator/Minutes: Kelly Goodwin, TWC

2nd Quarter SART Minutes

Order of Business:

Approval of January 2024 Minutes

- All in favor, none opposed or abstained.

Introductions:

- See sign-in list for attendee information.

Program: *Trauma Informed Response to Sexual Assault,* Chelsea Davis, LMSW, Trauma Trainer, The Women's Center of Tarrant County

Announcements/Agency Updates:

The Women's Center: TSCAAC Conference April 24th and 25th

DA: Interview kits and bracelets available for use by partner agencies; TASSA Guide available via QR Code; Kim D'Avignon promoted to Trial Specialist at DA's Office, Emily Dixon now Chief of the Sexual Assault Unit

Project Beloved: Installing 100th soft interview room at TCSO; May Training (free) Investigating Criminal Asphyxiation

Medical Examiner's Office- new staff added

JPS: Evening, full-time forensic nurse position posted

- Next Meeting: July 24, 2024 2pm-4pm

Attendees:

TARRANT COUNTY SART
Sign-In Sheet

2nd QUARTER MEETING
Date: April 24, 2024

New attendees please place * beside your email
If you're receiving the meeting notices no need to add

Name (please print)	Signature	Agency	Title	E-Mail
Monica Lugo	Monica Lugo	TCSO	PREA Manager	mlugo@tarrantcountytx.gov
Clay Taylor	[illegible]	Arlington PD	Sgt	Clayton.Taylor@Arlingtontx.gov
Tracy Matheson	Tracy Matheson	Project Beloved	President	tracy@projectbeloved.org
Cindy Burnette	Cindy Burnette	THR	SANE Director	Cindyburnette@texashealth.org
[illegible]	[illegible]	TCDA	ACDA	kdarguin@tarrantcountytx.gov
Kristen Hammonds	K. Hammonds	TCME	CODIS Admin	Kthammonds@tarrantcountytx.gov
Cindy Roland	[illegible]	TX Air Nat Guard	Vic. Adv.	cindy.roland@us.af.mil
Rhonda Franklin	[illegible]	TX Air National Guard	SARC	Rhonda.franklin.1@us.af.mil
Nick Garcia	[illegible]	Colleyville PD	Det.	ngarcia@colleyville.com
Ty Stillman	[illegible]	Bedford PD	Sgt.	Tyler.Stillman@bedfordtx.gov
Melissa Haas	Melissa Haas	VNTCHI	Lab Director	melissa.haas@unthsc.edu
Kevin Maddux	[illegible]	Colleyville	Detective	kmaddux@colleyville.com
Kira Monthie	Kira Monthie	TCME	DNA analyst	ktmonthie@tarrantcountytx.gov
Ellen Goodman	Ellen Goodman	MHMRTC/BACA	Program Director	ellen.goodman@mhmrtc.org
Priscilla Kenyon	[illegible]	JPS	FNE	
[illegible]	[illegible]	TCU CARE	Asst Director	l.carnahan@tcu.edu
Khara Breeden	[illegible]	TXFNE	CEO	khara@txfne.com
Brookley Del Bosque	[illegible]	TXFNE	COO	brookley@txfne.com

Name (please print)	Signature	Agency	Title	E-Mail
Shelby Hopson	[illegible]	FWPD	VA coord	shelby.hopson@fortworth
Jared Salzman	[illegible]	FWPD	Lt SVS	Jared.Salzman@fortworthpolice.gov
Brad Cantu	[illegible]	FWPD	Sgt	bradley.cantu@fortworthtexas.gov
Makayla Moore	[illegible]	Grapevine PD	Advocate	mmoore@grapevinetexas.gov
Clarissa Padron	[illegible]	Grapevine PD	Advocate	cpadron@grapevinetexas.gov
Alisha Matheria	[illegible]	TWC	Advocate	amatheria@womenscentertc.org
[illegible]	[illegible]	JPS	Forensic N	[illegible]
Corinne Hill	Corinne Hill	TCME	Forensic Biologist	CLHill@tarrantcountytx.gov
Kelly Goodwin	Kelly Goodwin	TWC	Hospital Advocate	kgoodwin@womenscentertc.org

TARRANT COUNTY SART

3rd Quarter SART Meeting

Date of meeting: July 24th, 2024 @ 2:00 pm

Location– The Women's Center of Tarrant County

Presiding Officer - Connie Housley, JPS Forensic Nursing

Facilitator/Minutes: Kelly Goodwin, TWC

2nd Quarter SART Minutes

Order of Business:

Approval of April 2024 Minutes

- All in favor, none opposed or abstained.

Introductions:

- See sign-in list for attendee information.

Program: *Adult S/A Case Review*- Darrin DeLaCruz, Tarrant County District Attorney's Office, Adult S/A Unit

Announcements/Agency Updates:

The Women's Center: New Weekend Hospital Advocate; 7 days a week coverage at JPS

TCU: Now providing ongoing training to all students

Texas FNE: Celebrating one year live

Texas Health: Oct-24th Case Review-- "Interesting Cases"

FWPDVA: 2 job openings; Bilingual Grant Coordinator and Office Assistant

Cook Children's: New Social Worker and SANE; Dr. Kauffman and Kitty both moving to part time; New Medical Director

- Next Meeting: October 23rd, 2024 2pm-4pm at The Women's Center of Tarrant County

Attendees

TARRANT COUNTY SART
Sign-In Sheet

3rd QUARTER MEETING
Date: July 24, 2024

****New attendees please place *** beside your email**
If you're receiving the meeting notices no need to add

Name (please print)	Signature	Agency	Title	E-Mail
Jaclyn Monday	[signature]	JPS/FNE	SANE	JMonday@JPSheath.org
Ashlie Damsh	[signature]	JPS / FNE	SANE	APamish01@JPShealth.org
Amanda Amone	[signature]	TXFNE	Clinical Director	amanda@txfne.com
Cody Brock	[signature]	NRHPD	Detective	cbrock@nrhtx.com
Melissa Haas	[signature]	UNTCHI	Lab Director	melissa.haas@unthsc.edu
KWANG HAN	[signature]	BEDFORD PD	Detective	Kwang.Han@BedfordTX.gov
Leah Carnahan	[signature]	TCU CARE	Asst. Director	l.carnahan@tcu.edu
Kelly Holland	[signature]	TCSO	Det.	kkholland@tarrantcountytx.gov
Bruce Mosley	[signature]	TCSO	Det	blmosley@tarrantcountytx.gov
Sara Hyde	[signature]	NRHPD	Det	~~shyde@nrhtx~~ shyde@nrhtx.com
Heather Kramer	[signature]	TCME	Sr. Forensic Biologist	hmkramer@tarrantcountytx.gov
Kira Monthie	[signature]	TCME	Forensic Biologist	KMonthie@tarrantcountytx.gov
Alessandra Alicea-Centeno	[signature]	TCME	Sr. Criminalist	ACenteno@tarrantcountytx.gov
Emma Rojas	[signature]	THR	SANE	emmarojas@Texashealth.org
Judy Jeanes	[signature]	JFS SANE		
Chris LaChance	[signature]	TCDA	INV	cmlachance@tarrantcountytx.gov
Clay Taylor	[signature]	Arlington	Sgt	Clayton.Taylor@Arlingtontx.gov
Phillip Williams	[signature]	" "	DET	phillip.williams@arlingtontx.gov

Name (please print)	Signature	Agency	Title	E-Mail
Connie Henry	[signature]	JPS	SANE Mgr	[signature]
Stacey Henley	[signature]	Cook Childrens	SANE	stacey.henley@cookchildrens.org
Brianna Cronin	[signature]	Cook childrens	LCSW	brianna.cronin@cookchildrens.org
Clarissa Padron	[signature]	Grapevine PD	LMSW	cpadron@grapevinetexas.gov
Laura Loftin	[signature]	301 FW Air Force	LCSW/SARC	laura.loftin@us.af.mil
Khara Breeden	[signature]	TXFNE	CEO	khara@txfne.com
Cindy Burnette	[signature]	THR	SANE direct	cindy.burnette@texashealth.org

Name (please print)	Signature	Agency	Title	E-Mail
Darren DelaCruz		DA's office	ADA	dsdelacruz@TarrantCounty Tx.gov
DEBORAH CADDY		Women's Center	Prog. Director	dcaddy@womenscenterfc.org
Ty Stillman		Bedford PD	Sergeant	Tyler.Stillman@bedfordtx.gov
Shelby Hopson		FWPD	VA Coord	shelby.hopson@fortworthtexas gov
Brad Cantu		FWPD	Sergeant	bradley.cantu@fortworthtexas.gov
Sonia Sims		THK	SANE Mgr	
Beth Maeker		THK	SANE Mgr	
Stephanie Simpson		DA's office	ADA	SKSimpson@tarrantcountytx.gov
Kelly Goodwin		TWC	Hospital Advocate	Kgoodwin@womenscenterfc.org
Alisha Mathews		TWC	Asst. Dir	amathews@womenscenterfc.org
Dawn Krause		TWC	VA	Dkrause@womenscenterfc.org

October 23rd 2024 Minutes

TARRANT COUNTY SART

3rd Quarter SART Meeting
Date of meeting: October 23rd, 2024 @ 2:00 pm
Location– The Women's Center of Tarrant County
Presiding Officer - Connie Housley, JPS Forensic Nursing
Facilitator/Minutes: Kelly Goodwin, TWC

2nd Quarter SART Minutes

Order of Business:
Approval of July 2024 Minutes

- All in favor, none opposed or abstained.

Introductions:

- See sign-in list for attendee information.

Program: *When Sexual Assault Occurs from an Intimate Partner,* Beth Maeker and Sonia Sims, Texas Health Resources

Announcements/Agency Updates:
District Attorney: Chris Lachance promoted to Assistant Chief; two new Investigators, Annabell Gomez and Dara Dewall; Requesting LEA and SANE Programs to offer SANE exam on-site, even for victims outside the window of evidence collection
Arlington: Project Beloved to install soft-interview room
Project Beloved: TCSAAC Conference, April 3-4, 2024
Cook Children's: New Medical Director, Dr. Peeler; Case Review, Nov 15th 1:30PM, live and virtual options offered
UNTHSC, Center for Human Identification: Three Analyst hired and currently in training; Melissa Haff resigning
Tarrant County Jail/PREA: 2 investigators assigned to the jail
Texas Health Resources: Three full-time Forensic Nurses, soon to be certified in Pediatrics
HEB Victim's Assistance: New Victim Advocate
UNTHSC Nursing School: Dr. Cindy Weston announced New SANE Training program

Meeting agenda to arrive one week prior to meeting

Medical Examiner's Office: Reminder to SANEs to collect buccal swabs from victims; Y-screening in process and has had success

Fort Worth PD: Cantu discussed backlog in kit processing; currently working to hire new lab analyst; two new detectives in Sex Crimes

Air Force: actively recruiting a Victim Advocate

JPS: Next Year: Biannual Report Due

- Next Meeting: January 15th, 2025, 2pm-4pm

Attendees

TARRANT COUNTY SART
Sign-In Sheet

4th QUARTER MEETING
Date: October 23, 2024

****New attendees please place *** beside your email**
If you're receiving the meeting notices no need to add

Name (please print)	Signature	Agency	Title	E-Mail
Monica Lugo	[signature]	TCSO	PREA Manager	mlugo@tarrantcountytx.gov
Melissa Hans	[signature]	UNTCHI	Lab Director	melissa.hans@unthsc.edu
Emma Rojas	[signature]	THR	SANE	emmarojas@texashealth.org
Judy Jeanes	[signature]	JPS SANE		jthompol@jpshealth.org
Mike McCormack	[signature]	TCU PD	Detective	m.mccormack@tcu.edu
Bruce Mosley	[signature]	TCSO	Detective	blmosley@TarrantCountyTX.gov
Kelly Goodwin	[signature]	TWC	Hospital Advocate coord.	kgoodwin@womenscentertc.org
Connie Hung	[signature]	JPS	FNS Mgr	Chowl@jpshealthwg
Alisha Mathews	[signature]	TWC	Asst Dir	amathews@womenscentertc.org
Brad Cantu	[signature]	FWPD	Sergeant	bradley.cantu@fortworthtexas.gov
Kelly Holland	[signature]	TCSO	Det	kkholland@tarrantcountytx.gov
Jared Salzman	[signature]	FWPD	Lieutenant	Jared.Salzman@fortworthtexas.gov
Robert Abbott	[signature]	TCU PD	Sgt	R.Abbott@TCU.Edu
Cindy Weston	[signature]	UNTHSC-Nursing	Dean	cindy.weston@unthsc.edu
Nancy Philip	[signature]	HEB PD	Victim Advocate	nphilip@hursttx.gov
Danielle Sherar	[signature]	JPS	Elec. Director	dsherar@jpshealth.org
Laura Loftin	[signature]	301FW AF	SARC	laura.loftin@us.af.mil

Name (please print)	Signature	Agency	Title	E-Mail
Shelby Hopson	[signature]	FWPD	VA Coord.	shelby.hopson@fortworthtexas.gov
Stephanie Beard	[signature]	BPD	VAC	sbeard@burkontx.com
Nieachia Wherry	[signature]	Army NG	VA	Nieachia.L.wherry.civ@Army.mil
Stacey N Henley	[signature]	Cook Childrens	RN	stacey.henley@cookchildrens.org
Rick Hahn	[signature]	FWPD	Captain	Charles.hahn@fortworthtexas.gov
Sara Hyde	[signature]	NRH PD	Det	shyde@nrhtx.com
Ellen Goodman	[signature]	MHMR Tarrant/BHA	BSS	ellen.goodman@mhmrtc.org
Nancy Downing	[signature]	UNTHSC	Prof	nancy.downing@unthsc.edu
Jodie Klann	[signature]	TCME	Lab Dir	jlklann@tarrantcountytx.gov
Angela Thompson	[signature]	FFSC	Victim advocate	Angela.L.Thompson50.naf@us.navy.mil
Teri Howell	[signature]	JPD	Prob. Officer	tlhowell@tarrantcountytx.gov

Name (please print)	Signature	Agency	Title	E-Mail
CHRIS LACHANCE		TCCDA	INVESTIGATOR	cmlachance@tarrantcountytx.gov
Stephanie Simpson		TCCDA	ATDA	skSimpson@tarrantcountytx.gov
~~Annabelle Gomez~~		TCCDA	INV.	ASGOMEZ@TARRANT COUNTY TX.GOV
Darin Dewall		TCCDA	Investigator	dmdewall@tarrantcountytx.gov
Clay Taylor		Arlington PD	Sgt/Sex crimes	Clayton.Taylor@Arlingtontx.gov
Deburiah Caddy		Women's Center	Prog. Director	dcaddy@womenscentertc.org
Tracy Matheson		Project Beloved	Pres	tracy@projectbeloved.org
Melissa Pearce		Burleson P.D.	Victim Advocate	mpearce@burlesontx.com
Sonia Sims		THR	SANE Mgr	soniasims@texashealth.org
Beth Maeker		THR	SANE Mgr	marymaeker@texashealth.org
Emma Rojas		THR	SANE	emmarojas@texashealth.org
Nancy Philip		HEB PD	Victim Advocate	nphilip@hursttx.gov
Melissa Blevins		TXFNE	SANE	melissa@txfne.com
Heather Kramer		TCME	Sr. Forensic Biologist	hmkramer@tarrantcountytx.gov
Daniel McClain		TX OAG	LT	daniel.mcclain@oag.texas.gov
GLORIA DOLL		TX OAG	SGT	GLORIA.DOLL@OAG.TEXAS.GOV
Noe Camacho		TX OAG	Sgt	noe.camacho@oag.texas.gov

TARRANT COUNTY SART

1st Quarter SART Meeting

Date of meeting: January 22, 2025 at 2PM

Location– The Women's Center of Tarrant County

Presiding Officer - Connie Housley, JPS Forensic Nursing

Facilitator/Minutes: Alisha Mathenia/Kelly Goodwin, TWC

2nd Quarter SART Minutes

Order of Business:

Approval of October 2024 Minutes

- All in favor, none opposed or abstained.

Introductions:

- See sign-in list for attendee information.

Program: *Human Trafficking Resources and Services*, Ty Bowden, Associate Director of The Net

Announcements/Agency Updates:

TWC: Victory Over Violence 5k – Saturday, April 12

Arlington PD: New soft interview room completed by Project Beloved

Project Beloved: Congressman Craig Goldman initiating process to make Molly Jane's Law federal

FWPD Victim's Assistance: TCSAAC Conference, April 3rd and 4th, 2025; New Advocate started

FWPD: Contacted victim's affected by kit backlog; Crime Lab hired new Forensic Analyst; 2 additional DNA labs hired for assistance in processing back-logged kits; predicted completion date March-April 2025; New Sex Crimes Lieutenant, Ebony Sutherland

Bedford PD: New Detective

NRH: Two new detectives moved from property to persons

Cook Children's- Child Abuse Conference, April 02, 2025 at Cook Children's, virtual option available

John Peter Smith- Judy- Adjunct professor at UNTHSC's new forensic program

Attendees

TARRANT COUNTY SART
Sign-In Sheet

1st Quarter SART
Date: January 22, 2025

New attendees please place * beside your email
If you're receiving the meeting notices no need to add

Name (please print)

	Signature	Agency	Title	E-Mail
Dalton Erb	[signature]	Lake Worth PD	Detective	Derb@lakeworthtx.org
CARLY PAGE	[signature]	LAKE WORTH PD	DETECTIVE	CPAGE@LAKEWORTHTX.ORG
Tracy Matheson	[signature]	Project Beloved	President	tracy@project beloved.org
Laura Loftin	[signature]	NAS JRB Air Force Fort Worth	SARC	laura.loftin@us.afimil
Carina Robinson	[signature]	TX Army National Guard	SARC	carina.m.robinson.civ@army.mil
Melissa Blevins	[signature]	TXFNE	SANE	melissa@txfne.com
Afton Dattlinger	[signature]	TXFNE	CA/CP SANE	afton@txfne.com
Uvonna Alexander	[signature]	TCME Labs	DNA Tech Labs	ufalexander@tarrantcountytx.gov
Sara Hyde	[signature]	NRH PD	Detective	shyde@nrhtx.com
Stacey Henley	[signature]	Cook Childrens	FNE	stacey.henley@cookchildrens.org
Zachary Watson	[signature]	Colleyville PD	Detective	*** zwatson@colleyville.com ***
Alisha Matheus	[signature]	TWC	Asst. Dir	amatheus@womenscentertc.org

Name (please print)	Signature	Agency	Title	E-Mail
Jacklyn Donovan	[signature]	Arlington PD	Det	
Crystal Coney	[signature]	APD	Det.	
Clay Taylor	[signature]	APD	Sgt	
Monica Lugo	[signature]	TCSO	PREA Manager	
KWANG HAN	[signature]	BPD	Detective	
Rachel Burch	[signature]	Center for Human ID	Asst. TL	rachel.burch@unthsc.edu
Mike McCormack	[signature]	TCU PD	Det	m.mccormack@tcu.edu
Marvin Cole	[signature]	Fort Worth PD	Det	
Priscilla Kenyon	[signature]	JPS FNS	FNE	Pkenyon@jpshealth.org
Nicolas Garcia	[signature]	Colleyville PD	Det	ngarcia@colleyville.com
Ty Stillman	[signature]	Bedford PD	Sgt	Tyler.Stillman@bedfordtx.gov
Chris LaChance	[signature]	TCCDA	INVESTIGATOR	cmlachance@tarrantcountytx.gov
Leah Camahan	[signature]	TCU	CARE Advocate	l.camahan@gmail.com
DEBORAH CADDY	[signature]	Women's Center	Director	dcaddy@womenscentertc.org
Ellen Goodman	[signature]	NHMRC Tarrant	PSS	ellen.goodman@nhmrtc.org
Kelly Goodwin	[signature]	TWC	Hospital Advocate Coord	kgoodwin@womenscentertc.org
Avery Leeper	[signature]	TWC	TWC Intern	avery.leeper23@gmail.com

Name (please print)	Signature	Agency	Title	E-Mail
Shelby Hopson		FWPD	VA Coord	shelby.hopson@fortworthtexas.gov
Stephanie Simpson		TCDA	DA	SCSimpson@tarrantcountytx.gov
Emily D.		TCDA	ADA	
Damon DeLuca		TCDA	ADA	dsdeluca@tarrantcountytx.gov
Dina Dewall		TCDA	Investigator	dmdewall@tarrantcountytx.gov
Judy Jones		JPS	SANE	JThompson@JPShealth.org
Connie Hung		JPS	FNS Manager	Chung@JPShealth.org

TARRANT COUNTY SART

2nd Quarter SART Meeting

Date of meeting: April 23rd, 2025 @ 2:00 pm

Location– The Women's Center of Tarrant County

Presiding Officer - Connie Housley, JPS Forensic Nursing

Facilitator/Minutes: Alisha Mathenia/ Kelly Goodwin, TWC

2nd Quarter SART Minutes

Order of Business:

Approval of January 2025 Minutes

- All in favor, none opposed or abstained.

Introductions:

- See sign-in list for attendee information.

Program: Adult S/A Case Review: Darren DeLaCruz & Stephanie Simpson, TCDA Adult S/A Unit

Announcements/Agency Updates:

UNTHSC- First classroom training for Forensic Nursing starting in June;

District Attorney's Office- Emily Dixon promoted out of Adult Sexual Assault Unit; Darrin DeLaCruz is the new chief of Adult SA unit; Stephanie Simpson moved out of Adult Sexual Assault Unit as well; new ADA's hired for Adult SA Unit

Texas Health Resources: Transitioning to Forensics Healthcare Department, officially starting this summer

Tarrant County Jail- New Executive Chief

FWPD- Getting caught up with backlog of sexual assault kits; Crime Lab and FWPD changed protocols so kits are getting tested quicker

John Peter Smith- Connie Housley, Manager of Forensic Nursing Services is retiring after 25 years—last day May 12th

- Next Meeting: July 23, 2025 2pm-4pm

TARRANT COUNTY SART
Sign-In Sheet

2nd QUARTER MEETING
Date: April 23, 2025

****New attendees please place *** beside your email**
If you're receiving the meeting notices no need to add

Name (please print)	Signature	Agency	Title	E-Mail
CONNIE Hardee		JPS	MSN	
Clay Taylor		Arlington PD	Sgt	Clayton.Taylor@Arlingtontx.gov
Cmla Chance		TC DA	ACI	Cmlachance@tarrantcountytx.gov
Lauren Corley		APD	PD	crystal.corley@arlingtontx.gov
Afton Duttlinger		TxFNE	Assistant Manager/FNE	afton@txfne.com
Celeste Tarango		APD		celeste.tarango@arlingtontx.gov
Elizabeth Kinsey		TC DA	Attorney	ebkinsey@tarrantcountytx.gov **
Annabelle Amon		TCDA	INV.	AnnabelleAmon ASAmon@TARRANTcountyTX
Danielle Bonanno		TCDA	ADA	dmbonanno@tarrantcounty-x.gov
Cindy Burnette		THR	SANE	Cindyburnette@texashealth.org
Beth Mackey		THR	SANE	marymackey@texashealth.org
Emma Rojas		THR	SANE	emmarojas@texashealth.org
Monica Lugo		Tarrant Sheriff's Office	PREA Manager	MLugo@tarrantcounty.tx.gov
Nick Garcia		Colleyville PD	Detective	ngarcia@colleyville.com
KWANG HAN		Bedford PD	Detective	Kwang.Han@bedfordTX.gov
Rhonda Franklin		Air Force	SARC	rhonda.franklin.1@us.af.mil
Cindy Roland	Cindy Roland	Air Force	Victim Advocate	Cindy.Roland@us.af.mil
Brad Cantu		FWPD	Sergeant	bradley.cantu@fortworthtexas.gov

Name (please print)	Signature	Agency	Title	E-Mail
Shelby Hopson		FWPD VA	VA Coord	shelby.hopson@fortworthtexas.gov
Callie Crawford		JPS/UNT	Trauma Ed	ccrawford@jpshealth.org
Judy Jeanes		JPS SANE	CARE	jthompson@jpshealth.org
Erika Zgenek		CHI	Casework Lab Director	erika.zgenek@unthsc.edu
Rachel Burch		Center for Human Identification	Asst. TL	rachel.burch@unthsc.edu
Laura Loftin		301 FW SAPR	SARC	laura.loftin@us.af.mil
Jaylynn West		TCU	Advocate	jaylynn.west@tcu.edu
Kelly Goodwin		TWC	Hospital Advocate Coordin.	kgoodwin@womenscenterfc.org
Deborah Caddy		TWC	Director	dcaddy@womenscenterfc.org
Tamara Ballard		JPS	FNE	tballard@jpshealth.org
Stacey Henley		Cook Childrens	Forensic Nurse	Stacey.Henley@CookChildrens.org
Priscilla Kenyon		JPS	FNS	pkenyon@jpshealth.org
Alisha Mathews		TWC	Asst. Dir	amathews@womenscenterfc.org

TARRANT COUNTY SART

3rd Quarter SART Meeting

Date of meeting: July 23rd, 2025 @ 2:00 pm

Location– The Women's Center of Tarrant County

Presiding Officer - Alisha Mathenia, TWC

Facilitator/Minutes: Alisha Mathenia/ Ashley Mason, TWC

3rd Quarter SART Minutes

Order of Business:

Approval of April 2025 Minutes

- All in favor, none opposed or abstained.

Introductions:

- See sign-in list for attendee information.

Program: Guest Speaker: Lauren Lawrence, Assistant Criminal District Attorney & Legislative Liaison; Subject: 89th Legislative Updates

Announcements/Agency Updates:

Medical Examiner- Modification of reports

TCSO- 1st Juvenile meeting, Kelly Holland resigning as detective

District Attorney's Office- Introducing their 1st soft interview room

Texas Health Resources: Addition of a Full-Time Sexual Assault Forensic Nurse, allowing for 24-hour coverage; Full forensic program to include IPV exams

FWPD- New Supervisor for Crime Lab

Bedford PD- Detective returns after a year off

Arlington PD- Conducting briefings with TxFNE

TCU- New Title 9 Coordinator

- Next Meeting: October 22, 2025 2pm-4pm at The Women's Center

Tarrant County SART Sign-in Sheet

July 23, 2025: 3rd Quarter Meeting

Name (please print)	Signature	Agency & Title	Email
Clay Taylor		Arlington PD Sgt	Clayton.Taylor@ArlingtonTX.gov
Cindy Burnette	Cindy Burnett	THR Forensic Health	Cindy.burnette@texashealth.org
Ashley Mason	ashleymason	TWC Hospital Advocate	amason@womenscentertc.org
Kelly Odom	Kelly A. Odom	FWPD Crime Lab	Kelly.odom@Fortworthtexas.gov
Laura Escarsega		↓	laura.escarsega@fortworthtexas.gov
Christi Thornhill	C Thornhill	Director Child & Teen MIP Cook Childrens	Christi.thornhill@cookchildrens.org
Carina Robinson		TXARNG STARC	Carina.M.Robinson.civ@army.mil
Afton Duttlinger		TXFNE Clinical manager	afton@txfne.com
Angela Thompson		USNavy Victim Advocate	Angela.L.Thompson50.nof@us.navy.mil
Priscilla Kemp		JPS FNS	PKemp@jpshealth.org
Ty Stillman		Bedford PD	Tyler.Stillman@bedfordtx.gov
Ivan Roman		Bedford P.D.	iroman@bedfordtx.gov

Tarrant County SART Sign-in Sheet

July 23, 2025: 3rd Quarter Meeting

Name	Agency/Title	Contact Number	Email
Vanesa Plasencia	TXFNE	832-947-7266	Vanesa@txfne.com
Stephanie Simpson	TCDA	817-884-1400	sksimpson@tarrantcountytx.gov
Brenda Letter	Cook's	214-205-6157	Brenda.Letter@cookchildrens.org
Douglas Day	FWPD / Detective	817-392-4327	douglas.day@fortworthtexas.gov
Ivory Ramsay	TCSO	(817)884-3019	idramsay@tarrantcountytx.gov
Marin Lugo	TCSO	817-884-3197	MLugo@tarrantCountytx.gov
Diane Schmid	Richland Hills PD	817-616-3796	dschmid@richlandhills.com
Nick Garcia	Colleyville PD	8175031262	ngarcia@colleyville.com
Ruben Quesada	TCSO	8178841436	rjquesada@tarrantcountyTx.gov
Cody Brock	NRHPD	817 427-7052	cbrock@nrhtx.com
Stacey Henley	Cook Childrens	682-885-3953	Stacey.Henley@CookChildrens.org
Sonia Sims	Texas Health		soniasims@texashealth.org

Attendees

Tarrant County SART Sign-in Sheet

July 23, 2025: 3rd Quarter Meeting

Name	Agency/Title	Contact Number	Email
Ellen Goodman	MHMR / BALA	817-201-5745	ellen.goodman@mhmrtc.org
Brookley Delbosque	TXFNE	713-874-4211	brookley@txfne.com
Khara Breeden	TXFNE	832-818-3847	khara@txfne.com
Dark Dewall	TCDA	972 754-1225	darkdewall@tarrantcountytx.gov
Mike McCormack	TCU	817-257-7050	m.mccormack@tcu.edu
Keshona Henry	Cook Childrens	682-885-3933	keshona.henry@cookchildrens.org
Kelly Holland	TCSO	8066767939	kkholland@tarrantcountytx.gov
Ramon Garcia	TCSO	817-296-6146	rmgarcia@tarrantcountytx.gov
Jaclyn Monday	JPS	512-516-5619	Jmonday@JPShealth.org
Rachel Burch	Center for Human ID	817-735-2143	rachel.burch@unthsc.edu
Sara Hyde	Detective / NRHPD	817-427-7036	shyde@nrhtx.com
Alisha Mathews	ADCS / TWC	817-927-4489	amathews@twcmtc.org

Tarrant County SART Sign-in Sheet

July 23, 2025: 3rd Quarter Meeting

Name	Agency/Title	Contact Number	Email
Leah Carnahan	TCU CARE	817-257-5225	lcarnahan@tcu.edu
Theresa Fugate	CARE Team	817-994-6630	Theresa.Fugate@CookChildrens.org
Matt Spillane	Haltom City PD	817-222-7029	mspillane@haltomcitytx.com
Judy C. Jeanes	JPS SANE / UNT		
Courtney Engelbaum	Cook's CARE Team		courtney.engelbaum@cookchildrens.org
Mary Ann Contreras	JPS Health Network	817 702 8814	mcontr01@jpshealth.org

SECTION 3

DATA AND FINDINGS

DATA AND FINDINGS:

For the purpose of this report, we will be reporting numbers of the adult sexual assault crimes from October 1, 2023, through September 30, 2025. The reported crimes include the felonies of Sexual Assault, Aggravated Sexual Assault, Aggravated Kidnapping and Burglary with Sexual Assault as the underlying crime, and the misdemeanor offense of Indecent Assault.

Women's Center reported that they were called to hospitals for the purpose of victim accompaniment 1,323 times for victims over the age of 18. They additionally provided accompaniment for 1,375 cases involving victims 17 years of age. They keep those statistics separately because the Women's Center follows the Family Code definition of adult which is 18 while the Penal Code designates adult to be 17 years of age.

In Tarrant County, there were 2,323 reports of adult sex crimes (victim 17 years of age or older) received by the various police departments in our jurisdiction. Of those, 2,285 were investigated. Law enforcement agencies (LEA) indicated that the cases not investigated mostly consisted of reports that the victim did not want to proceed with the investigation. Of the cases investigated, 745 felony cases were filed with the Tarrant County District Attorney's Office.

Below is the chart of the individual agency's reported Sexual Assaults, investigated Sexual Assaults, and filed felony cases:

TARRANT COUNTY CITY/JURISDICTION	# OF S/A REPORTED	# OF S/A INVESTIGATIONS	# OF S/A FILED WITH DA'S OFFICE
Arlington, TX	424	424	158
Azle ISD PD	1	1	1
Azle, TX	16	16	4
Bedford, TX	34	34	12
Benbrook, TX	18	17	8
Blue Mound, TX	2	1	0
BNSF	0	0	0
Burleson, TX	7	7	5
Colleyville, TX	3	3	2
Crowley	6	6	5
Dallas/FW International Airport D.P.S.	10	10	10
Dalworthington Gardens	1	1	0
Euless	80	80	29
Everman	2	2	1
Forest Hill	9	9	6
Flower Mound	0	0	0
Fort Worth	1248	1248	288
Grand Prairie	42	42	14
Grapevine	48	48	18
Haltom City	31	31	13
Haslet- (TCSO Handles)	-	-	-
Hurst	38	38	10
Keller	10	5	2

Kennedale	6	6	5
Lake Worth	13	3	2
Lakeside	0	0	0
Mansfield	28	28	27
North Richland Hills	25	25	25
Pantego	0	0	0
Pelican Bay	1	1	1
Richland Hills	12	12	1
River Oaks	5	5	5
Saginaw	4	4	4
Roanoke	0	0	0
Sansom Park	3	3	3
Southlake	22	21	14
Southwestern Baptist Theological	1	0	0
Tarrant County College	2	2	2
Tarrant County District Attorney's Office	25	25	25
Tarrant County Hospital District (JPS Health Network)	16	16	1
Tarrant County Sheriffs Office	66	60	19
Texas Christian University	11	3	1
Trophy Club	2	2	0
University of North Texas Health Science Center	0	0	0
University of Texas at Arlington	16	12	6
Watauga	10	10	5
Westlake (Keller PD Handles)	4	3	3
Westover Hills	0	0	0
Westworth Village	9	9	5
White Settlement	12	12	5
TOTALS	2323	2285	745

*For agencies that are campus-based, the numbers reported do not include reports made for Title IX

The time-period of 10/1/23 to 9/30/25 necessarily means that some of the cases that have been filed by the LEA's are still pending at the DA's office. Of the 745 felony cases that were filed during that time- period, below is the breakdown of the status of those cases:

Case Statuses	**Count of Offense**
Pending	310
Disposed	369
Probation Revocation	19
No Bill	47
Grand Total	**745**

For the misdemeanor offense of Indecent Assault, those cases do not go through the Grand Jury process. The breakdown of filed and disposed cases of Indecent Assault from 10/1/23 to 9/30/25 are as follows:

- 159 filed cases filed.
- 206 cases disposed * this includes cases that were reduced down from a felony to indecent assault.

During this time-period many cases were disposed that had been filed before the date of 10/1/23. The Adult Sexual Assault Unit (ASA) of the DA's office disposed of 433 felony cases from 10/1/23 to 9/30/25. 324 of those cases disposed were cases of the felony offenses of Sexual Assault, Aggravated Sexual Assault, Kidnapping, and/or Burglary. Because oftentimes other crimes are filed alongside sex crimes from the same criminal episode, there were an additional 109 cases disposed of by the ASA Unit that were either indecent assault or of a non-sexual nature.

Noteworthy data points include the following:

- 41 Felony Convictions
- 14 Misdemeanor Convictions
- 61 Felony Probations
- 17 Misdemeanor Probations
- 56 dismissed*
- 46 cases were No Billed

*It is important to note that the vast majority of the dismissals were cases where the Defendant was indicted or convicted on another case or due to reindicting the charges to a higher charge. Only 10 cases were dismissed outright due to prosecutorial discretion.

During the reporting period, the Adult Sexual Assault Unit took 24 cases to trial during this time-period. Of those cases, there were 20 Guilty verdicts, 3 Not Guilty verdicts, and one mistrial due to a hung jury.

Evolving Trends:

Sexual assault is widely recognized as a historically underreported crime. In this context, the increase in reports, investigations, and felony case filings in Tarrant County between 2021 and 2025 is a meaningful indicator of progress due to improved response systems and survivor engagement.

In the last reporting period (2021-2023), law enforcement agencies received 1,758 reports of adult sexual assault, of which 1,717 were investigated. From those investigations, 253 felony cases were filed with the Tarrant County District Attorney's Office.

This reporting period, reports rose to 2,323 with 2,285 investigations conducted and 745 felony cases filed with the Tarrant County District Attorney's Office.

This upward trend in reporting and case filings suggests growing trust in the criminal justice system, enhanced investigative practices, and stronger collaboration across the Sexual Assault Response Team (SART) network.

Hospital Data:

One of the key responsibilities of hospitals is to collect and share data relevant to their role in the response process. This includes reporting the number of sexual assault forensic exams (SAFEs) conducted, the number of patients who present with sexual assault-related complaints, and the availability and timeliness of Sexual Assault Nurse Examiners (SANEs). Hospitals are also encouraged to identify and report any barriers they face in delivering services, such as staffing shortages, training needs, or resource limitations.

John Peter Smith Hospital

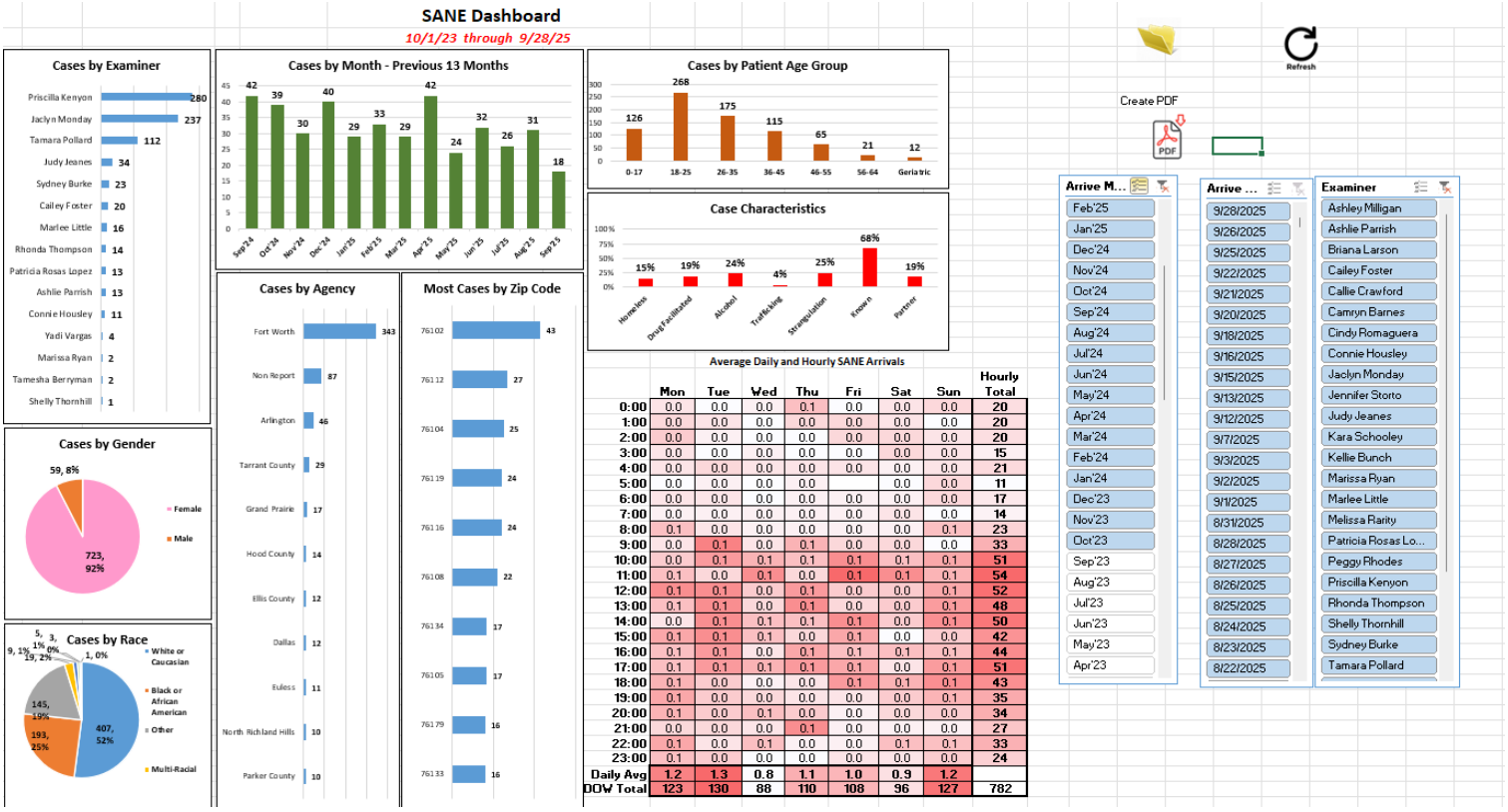

JPS Total Sexual Assault Examination Oct. 2023- Jan. 2025: 782	**25% Reported Strangulation Event**
JPS Total Adult Sexual Assault Examinations Oct. 2023- Jan. 2025: 656	**24% Alcohol Facilitated** **19% Drug Facilitated**
JPS Total Adolescent Sexual Assault Examinations Oct. 2023- Jan. 2025: 126	**87 Non- Reporting Examinations**

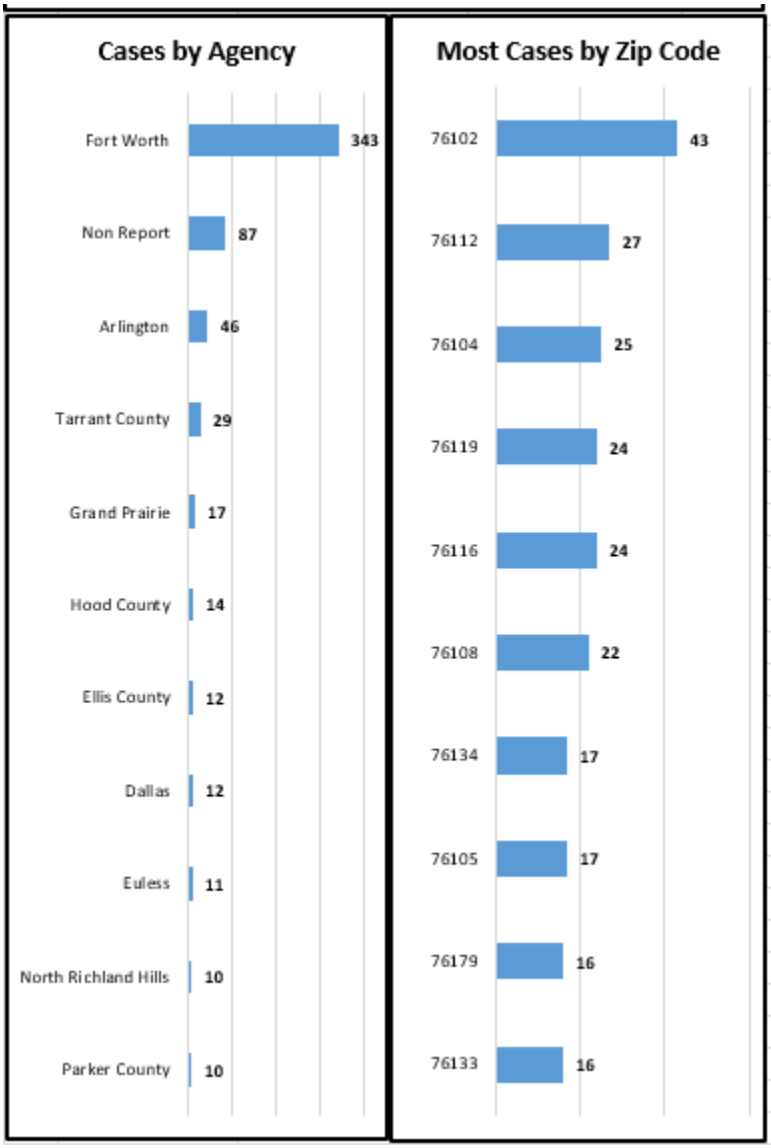
Cases by Agency
Fort Worth 343
Non Report 87
Arlington 46
Tarrant County 29
Grand Prairie 17
Hood County 14
Ellis County 12
Dallas 12
Euless 11
North Richland Hills 10
Parker County 10
Most Cases by Zip Code
76102 43
76112 27
76104 25
76119 24
76116 24
76108 22
76134 17
76105 17
76179 16
76133 16

Track Kit Delayed P/U from JPS Forensic Nursing Services-Chain of Custody Log:

TXT2201253- 10/01/23 @2220	**Mansfield PD**	**Picked up on 10/11/23 @ 0956**
TXT2201253- 10/04/23 @2150	**Hood County**	**Picked up on 10/13/23 @1132**
TXT2201204- 01/11/24 @ 2000	**Burleson PD**	**Picked up on 01/22/24 @0951**
TXT2301092- 02/11/24 @1524	**Everman PD**	**Picked up on 03/02/24 @1516**
TXT2301148- 04/16/24 @1250	**Ellis County**	**Picked up on 05/07/24 @1020**
TXT2301133 04/23/24 @1715	**Keller PD**	**Picked up on 05/02/24 @1043**
TXT2300219 09/20/24 @0431	**Saginaw PD**	**Picked up on 10/02/24 @1240**
TXT2300828 11/25/24 @1800	**Johnson County**	**Picked up on 12/05/24 @ 1056**
TXT2300278 11/25/24 @ 0120	**Hood County**	**Picked up on 12/04/24 @ 1219**
TXT2300843 12/06/24 @1130	**Kennedale PD**	**Picked up on 12/23/24 @1156**
TXT2300858 12/2/24 @0255	**Granbury PD**	**Picked up on 12/28/24 @1400**
TXT2300888 02/05/25 @1800	**North Richland Hills PD**	**Picked up on 02/08/25 @0900**
TXT2400226 05/03/25 @0857	**Southlake PD**	**Picked up on 05/14/25 @0948**
TXT2400273 05/16/25 @2120	**Ellis County**	**Picked up on 05/28/25 @0833**
TXT2400416 08/23/25 @1845	**Venus PD**	**Picked up on 09/02/2025 @1433**

Texas Health Resources:

Texas Health Forensic nurses have provided forensic nursing services to hundreds of patients since the start of this program. However, for this report, the focus will be on patients starting at the age of 17, beginning on October 1st, 2023, and ending on September 30th, 2025.

Facility	Oct 1 - Dec 31, 2023	Jan 1 - Dec 31, 2024	Jan 1 - Sept 30, 2025
THR Alliance	10 Patients Total 9 reported to LE 1 non-report	22 Patients Total 8 reported to LE 14 non-reports	26 Patients Total 19 reported to LE 7 non-reports
THR Arlington	24 Patients Total 20 reported to LE 4 non-reports	103 Patients Total 93 reported to LE 9 non-reports	58 Patients Total 53 reported to LE 5 non-reports
THR Azle	4 Patients Total 3 reported to LE 1 non-report	6 Patients Total 4 reported to LE 2 non-reports	5 Patients Total 5 reported to LE 0 non-reports
THR Fort Worth	39 Patients Total 27 reported to LE 12 non-reports	150 Patients Total 105 reported to LE 37 non-reports	105 Patients Total 84 reported to LE 21 non-reports
THR HEB	13 Patients Total 10 reported to LE 3 non-reports	39 Patients Total 27 reported to LE 12 non-reports	39 Patients Total 28 reported to LE 11 non-reports
THR Southwest	7 Patients Total 6 reported to LE 1 non-report	36 Patients Total 32 reported to LE 4 non-reports	21 Patients Total 14 reported to LE 7 non-reports
	97 Total Patients	**347 Total Patients**	**254 Total Patients**

Texas Forensic Nurse Examiners (TXFNE):

October 2023 - September 2025		TXFNE Avg Nurse Response Time	
Total: 205		1h 19m	
2023 (Oct - Dec)	15	Demographics	
2024	95	Gender	
2024 (Jan - Sept)	95	Female	190
Hospitals in Tarrant County		Male	13
MC Alliance	42	Other	2
MC Arlington	95	Race	
MC Fort Worth	28	African American	74
MC Grand Prairie (FSED)	5	Caucasian	65
MC Haslett (FSED)	3	Hispanic/Latino	52
MC North Hills	29	Multi-Racial	7
MC Saginaw (FSED)	1	American Indian	2
MC White Settlement (FSED)	2	Asian	2
Hospitals by Value		Unknown	2
MC Alliance	20%	Other/Not Listed	1
MC Arlington	46%	Age Ranges	
MC Haslett (FSED)	14%	Adolescent (13-17)	6
MC Fort Worth	2%	Adult (18-64)	199
MC North Hills	1%	Reports v Nonreports	
MC Grand Prairie (FSED)	14%	Reports	112

MC White Settlement (FSED)	0%	Non Reports	93
MC Saginaw (FSED)	1%	Acute v Nonacute	
Cases by County of Assault		Acute	144
Tarrant	125	Non Acute	61
Dallas	37	Victimization	
Unknown	29	Adult SA	186
Denton	7	Adult DFSA	7
Parker	4	Adult DFSA/ST	6
Collin	3	Adult SA	132
LE Agencies		Adult SA/ST	41
Arlington PD	35	Child SA	6
Fort Worth PD	34	Child SA	5
North Richland Hills PD	11	Child SA/ST	1
Grand Prairie PD	8	DV	7
Dallas PD	6	DV	3
Haltom City PD	2	DV/SA	2
Parker CSO	2	DV/SA/ST	1
Saginaw PD	2	DV/ST	1
White Settlement PD	2	HT	1
Allen PD	1	HT/SA/ST	1
Austin PD	1	PA	5
Carrollton PD	1	PA	2

Denton PD	**1**	**PA/ST**	**3**
Fayette PD	**1**		
Garland PD	**1**		
Mansfield PD	**1**		
Northlake PD	**1**		

SECTION 4

CASE EVALUATION

TARRANT COUNTY SART CASE REVIEW

TARRANT COUNTY SART CASE REVIEW

❖ **Date of Report** _____

Case Review Date: November 13th, 2025

Police Jurisdiction: Arlington PD

Victim: (Non-Identifying Information) 33 yearsold white female

Release of Information Obtained ☒ Yes ☐ No

Suspect Information: 32 year old white male

Relationship between Victim and Suspect:

☐ **Family member:** _____ ☒ **Spouse/Partner:** Dating relationship

☐ **Friend/ Acquaintance:** _____ ☐ **Stranger** ☐ **Other:** _____

Officer/ Investigator: Arlington Detective P.W.

SANE: JPS Hospital SANE

Advocate: TCWC

Prosecutor: TCDA

CASE INFORMATION:

1. **Officer Notification:**
   - a. Dispatch: ☒ Yes ☐ No ☐ Unknown
   - b. In person contact with victim: ☐ Yes ☐ No ☐ Unknown
   - c. Was suspect arrested: ☐ Yes ☐ No ☐ Other
2. **How many officers responded?** _____
   - a. Responding Officer ☒ Yes ☐ No
   - b. Detective/Investigator ☒ Yes ☐ No
   - c. Crime Scene ☒ Yes ☐ No

   Comments: Several Officers responded to the scene
3. **Was an Advocate called?** ☒ Yes ☐ No ☐ Not Applicable ☐ Unknown

   Did the Advocate respond? ☒ Yes ☐ No ☐ Unknown

   Comments: _____
4. **Was a Medical Forensic Exam SANE completed?**

   ☒ Yes ☐ No ☐ Not Applicable ☐ Unknown

   Comments: _____

5. Prosecution:

a. Was the case accepted for prosecution? ☒ Yes ☐ No ☐ Unknown

b. Was the response prompt? ☒ Yes ☐ No ☐ Unknown

Comments: Victim really began to open up once rapport was developed between the prosecutor and victim.

c. Was there a Victim/ Witness notification? ☒ Yes ☐ No ☐ Unknown

d. Was there Victim/Witness and or DA contact throughout the proceedings? ☒ Yes ☐ No ☐ Unknown

e. Was there a trial? ☐ Yes ☐ No

Result of case? Defendant plead guilty and received 40 year prison sentence.

CASE EVALUATION:

6. Was the multi-jurisdictional protocol followed as far as practicably possible and appropriate? ☒ Yes ☐ No ☐ Unknown

a. Law enforcement? ☒ Yes ☐ No

Follow up suggestion to the law enforcement necessary? ☐ Yes ☐ No

b. Advocate? ☒ Yes ☐ No

Follow up suggestion to Advocate necessary? ☐ Yes ☐ No

c. SANE? ☒ Yes ☐ No ☐ Not Applicable

Follow up suggestion to SANE necessary? ☐ Yes ☐ No

d. Prosecution? ☒ Yes ☐ No ☐ Not Applicable

i. Follow up suggestion to Prosecution necessary? ☐ Yes ☐ No

13. Was the victim given a Crime Victim Compensation Application?

☒ Yes ☐ No ☐ Not Applicable ☐ Unknown

14. Was the victim cooperative with the investigation and prosecution?

☒ Yes ☐ No ☐ Unknown

15. Does it appear that the victim's needs were adequately met?

☒ Yes ☐ No ☐ Unknown

If no, what could have been done to better meet the victim's needs?

16. Does it appear that all law enforcement, investigative and prosecutorial needs were adequately met? ☒ Yes ☐ No ☐ Unknown

Comments:

17. Does it appear that all SANE needs were adequately met?

☒ Yes ☐ No ☐ Not Applicable ☐ Unknown

Comments:

CONCLUSION: Challenges/Successes - Recommendations - Goals

One challenge in this case was victim declined to get a genital exam done. The victim that due to a ER doctor being extremely rough with her during the ER's evaluation of her, this dissuaded her from wanting to go through with the genital exam. As a SART we could reach medical doctors and provide trainings on how to treat victim in a trauma informed way.



TARRANT COUNTY

SART

ADULT SEXUAL ASSAULT RESPONSE TEAM PROTOCOL



This protocol was developed by the Tarrant County SART Protocol Development Team and reflects current best practice in community response to adult victims of sexual assault

TABLE OF CONTENTS

S SECTION 1: FOUNDATIONAL INFORMATION

Purpose of this Protocol 3

Mission Statement 3

Use of the Protocol… 3

Team Philosophies 3-4

History of the Team 4-5

SART Members and Guidelines 5-6

SECTION 2: CORE ASPECTS OF THE COLLABORATIVE RESPONSE

Equitable Access to Service 9

Responding to Disclosures of Violence 9-10

Providing Follow-up and Information 10

Advocacy Programs… 10-11

Confidentiality 11

SECTION 3: DISCIPLINE SPECIFIC INFORMATION

Advocacy 13-14

Behavioral and Mental Health 17-18

Law Enforcement 18-23

Health Professionals 24-29

Prosecution 30-34

Corrections 35-39

SECTION 1

FOUNDATIONAL INFORMATION

PURPOSE OF THE SEXUAL ASSAULT RESPONSE PROTOCOL

The Tarrant County Sexual Assault Response Team (SART) is a multidisciplinary, system-focused collaboration that brings together various professionals who address adult sexual assault intending to improve the local response to victims/survivors. A system-focused response is a long-term comprehensive method for a community to address all aspects of their response to sexual assault, which concentrates on patterns across all disciplines and agencies involved in the response. The purpose of the protocol is to provide written guidelines that help define roles and responsibilities to the various agencies responding to disclosures and reports of adult sexual violence. The goal is to guide practice, optimize community-wide response to sexual assault victims, avoid re-victimization, encourage victim participation when appropriate through the justice system and improve our community's ability to hold perpetrators accountable. This is the heart of collaborative teaming, and this document serves as a commitment to that work on behalf of all agencies.

TEAM MISSION STATEMENT

The mission of the Tarrant County Sexual Assault Response Team is to promote a systemic response that fosters a community sensitive to the needs of adult sexual assault survivors and holds sexual offenders accountable. This will be achieved through the collaborative and coordinated multidisciplinary response of the agencies and organizations that work with sexual assault survivors in Tarrant County.

USE OF SEXUAL ASSAULT PROTOCOL

This protocol serves as one tool used to improve the experiences and outcomes of adult victims/survivors of sexual violence and address gaps or barriers in service provision. It is essential to remember that each agency may have specific policies or guidelines and the intent is not to supersede individual agency policies but to improve the overall coordination and enhance the community response to sexual assault.

TARRANT COUNTY SART - PHILOSOPHIES AND PRINCIPLES

In our community, victim-centered means actively listening with compassion, empowering victims/survivors to make informed choices, and respectfully upholding those decisions in all possible instances. It is important that victims/survivors have their decisions and choices respected. This includes whether to report, the type of report, or seeking further services from other providers.

We are committed to understanding, recognizing, and increasing responder awareness of trauma's impact on individuals and the community. This philosophy known as a trauma-informed approach is based on the understanding that:

- A significant number of people with mental illness have experienced trauma in their lives
- Trauma may be a factor for many people in distress
- Past experiences can directly affect how someone responds to trauma
- Trauma can impact the person, their emotions, and relationships with others

When providing a trauma-informed response one should consider how their physical presence, stature, posture, volume, tone, smell, and demeanor might come across to the person. An essential part of that response is being mindful of what your presence might be bringing up for a person based on past experiences.

To ensure interactions are attentive and mindful, responders should put knowledge into practice by using five guiding principles:

- Safety - assurance that physical and emotional are first and foremost
- Trustworthiness
- Choices – when safe and appropriate to do so
- Collaboration
- Empowerment

HISTORY OF THE TARRANT COUNTY SART

Tarrant County has a longstanding reputation for identifying and addressing concerns regarding victims of crime. In the mid-1980s, it became apparent that services for sexual assault/abuse survivors needed to be closely reviewed and strengthened. Wait times to receive a forensic medical exam were extensive, including nine to eleven-hour waits at John Peter Smith Hospital (JPS) where the majority of exams were performed. No area hospitals offering exams had designated private areas for these sensitive medical interventions. Sexual Assault Nurse Examiners (SANE) were not a part of the Tarrant County protocol at that point. Most of the delays resulted from sexual assault cases not being recognized and triaged as the same type of trauma as heart attacks and gunshot wounds. While many good-meaning professionals were part of this system, consistent trauma-informed approaches were not being utilized.

As so often it does with change, specific difficult situations demanded attention and need for review. Such was the case regarding sexual assault exams in Tarrant County. After addressing some system problems in their facility in 1985, Arlington Memorial Hospital initiated the process of training qualified nursing staff and began using the training as their standard response by early 1986. In the summer of 1989, JPS emergency nursing also began the process of recruiting nurses to be trained as SANE's. At the request of The Women's Center and the Tarrant County District Attorney's Office in October of 1989, JPS Administration held a meeting of staff from these three organizations and began a serious review of culture, strength and challenge areas, and possibilities for treating sexual assault patients as the trauma survivors they are. It became clear at this

meeting that an ongoing multidisciplinary team should be established to keep this review going and to be responsible for ensuring that needed changes would be made.

On December 20, 1989, the first meeting of the **Quality Assessment Committee on Sexual Abuse** was held with eleven attendees who were representatives of JPS, The Women's Center, the District Attorney's Office, and the Tarrant County Crime Lab. Because of the nature and extent of the problems to be addressed, this group met monthly for an extended period, eventually going to quarterly meetings as problems were addressed and resolved. The group expanded to include many other relevant organizations. When the number of attendees

began to exceed the space at JPS, the quarterly meetings began to be held at The Women's Center. In the 1990s, the term Sexual Assault Response Team (SART) was evolving across the country and recognized as a core community standard of practice that is essential for offering specialized trauma-informed interventions, including those from medical, investigative, criminal justice, advocacy, and mental health perspectives. Following this national movement, the local committee changed its name to the Tarrant County Sexual Assault Response Team and has remained committed to improving responses for these survivors.

SART MEMBERS AND GUIDELINES

The Tarrant County Commissioners Court is tasked with approving the appointment of the members of the Tarrant County SART. If one of the members is unable to fulfill their duties, the commissioner's court will fill the vacancy no later than the 30th day after the date the vacancy occurs. Approved Core members as of December 2021 are listed below.

- PRESIDING OFFICER – Kelly Goodwin, The Women's Center
- FORENSIC NURSE – Priscilla Kenyon, SANE, John Peter Smith Hospital
- CHIEF ADMINISTRATOR - Deborah Caddy, The Women's Center
- PROSECUTOR - ACDA Darren De La Cruz, Tarrant County Criminal District Attorney's Office
- FORT WORTH POLICE DEPT - Sgt. Bradley Cantu
- ARLINGTON POLICE DEPT - Sgt. Clay Taylor
- TARRANT COUNTY SHERIFFS OFFICE – Ruben Quesada
- BEHAVIORAL HEALTH PROVIDER - Ellen Goodman, Tarrant County MHMR

In addition, other members of local law enforcement agencies, crime lab personnel, hospitals that provide SANE services, military professionals, and local college title IX administrators are invited to attend our regular meetings. SART is limited to professional service providers of investigative agencies across Tarrant County or service providers who play an essential role in the response to sexual assault in Tarrant County. The presiding officer will send out invitations to the quarterly meetings to the applicable agencies. SART is not open to the general public.

Tarrant County SART meets quarterly at The Women's Center. Each meeting will consist of a review of what is going on in our community surrounding sexual assault. We will discuss any issues that have arisen to better facilitate services and investigations for our survivors. Every quarterly meeting will include training provided by one of the participating agencies on topics that are reflective of the dynamics of sexual assault within Tarrant County.

Biennially, Tarrant County SART will provide training on the best practice procedures outlined in this SART protocol. At that time, the current protocol will be reviewed to ensure that it represents the most effective systems and procedures to provide services to survivors in our community.

Agencies will also receive training on the best practices outlined in this protocol on an annual basis. In addition, not later than the 90th day after the last day of a legislative session, the Tarrant County SART will review and amend any protocols, forms, or guidelines outlined by the legislature as necessary.
As invited participants, all Tarrant County SART members, and invited participants are to sign in and agree to not disclose or disseminate confidential information during the SART meetings. Members and participants are not to record meetings and are prohibited from using their participation for their private gain. The Core members will investigate all reported instances of protocol breaches and the course of action as a result.

PROFESSIONAL BEHAVIOR

Professional and ethical behavior is always expected from members and participants. Members and participants shall promote a harmonious work environment by communicating and interacting professionally and respectfully. Members and participants must conduct themselves in such a way as to promote a positive image of Tarrant County SART and uphold its mission. Conflicts and disagreements will be handled respectfully with all participants listening to the views of others.

REVIEW PROCESS FOR VIOLATIONS

Members and participants of Tarrant County SART shall report incidents of possible breaches of protocols or conflicts involving others to the Approved Core members.

ACCOUNTABILITY

This protocol constitutes the standards of ethical business conduct required of all Tarrant County SART members and participants. Anyone who fails to comply with this protocol is subject to appropriate action, including termination from participation.

The success of our SART is dependent on the trust and confidence we earn from our agencies, stakeholders,

and especially the people we serve. We are committed to conducting our business with integrity.

SECTION 2

CORE ASPECTS OF THE COLLABORATIVE RESPONSE

EQUITABLE ACCESS TO SERVICES

Access to services in the aftermath of sexual violence is the most pressing issue facing many victims/survivors, responders, and communities. Many communities, identities, and specific populations experience differing levels of ability to access services in responding to sexual violence. A one-size-fits-all approach is harmful to victims/survivors and results in negative case outcomes. Processes based on creating equitable access means that services are designed to respond to the needs of individuals as well as groups. Examples include language access, materials that reflect diverse populations or cultural groups, and processes that have options for victims/survivors to get the tailored assistance they need after experiencing sexual violence. This includes service providers working to change issues of bias within their systems.

All agencies represented on our SART will work collaboratively to provide access to culturally sensitive, gender- inclusive, and linguistically available services using language lines and in-person interpretation, trauma-informed providers, and outreach literature.

RESPONDING TO DISCLOSURES OF SEXUAL VIOLENCE

Research consistently demonstrates that the first disclosure of sexual violence determines a victim's healing and recovery path. Disclosure often happens in multiple stages, with victims providing limited information to determine what type of reaction they will get from the person to whom they disclose; this also determines whether it is effective to disclose more information about the violence. This is especially true of how systems professionals ask questions. If a victim experiences negative or judgmental reactions, they are more likely to never disclose again or alter what parts of their experiences they disclose. Victims, who experience positive and supportive reactions, are more likely to continue to seek services and experience fewer mental and physical health impacts. These positive reactions include empathy, support, active listening, and asking non-judgmental questions.

All responders, regardless of the nature of their position, can offer positive and supportive reactions without compromising the integrity of their work. As such, our team commits to increasing our effectiveness in responding to disclosures of sexual violence.

We believe that by providing a well-trained first response to a disclosure of sexual assault, we can help victims/survivors continue with the services we provide and better facilitate sexual assault case outcomes and increase public safety. To accomplish that goal, we will train first responders on the importance of trauma- informed responses and victim-centered practices.

Some of the perspectives of sexual violence for which responders should be familiar with are:

- Discipline-Specific Responses to Sexual Assault

- Trauma-Informed Approach in Response to Sexual Assault Victims
- The Difference in Dynamics of Acquaintance Sexual Assault vs Known Perpetrator Assaults
- Spousal or Known Perpetrators and Familial Sexual Assault
- Alcohol or Drug Facilitated Assault
- Sexual Assault by the Helping Professional (caregiver, teacher, clergy, etc.)
- Sexual Exploitation and Sex Trafficking

Tarrant County SART will regularly train on these topics within our meetings as well as provide training to agencies in our county when requested. We will review any trends in sexual assault cases seen in our community so that we can be prepared to meet the needs of our agencies for training specific to those trends.

PROVIDING FOLLOW-UP AND INFORMATION

Regardless of the outcomes of processes or procedures, service providers can provide better care and support for victims/survivors by providing follow-up, information, or explanations of the case status—even if that update is that the case cannot move forward or that there has been no new information or changes.

To improve the experiences of victims/survivors, service providers will provide a business card or written information to each victim/ survivor with their agency's contact information and instructions for whom to call if they wish for an update on their case or have questions regarding a particular process.

SEXUAL ASSAULT ADVOCACY PROGRAMS

There are two types of advocates—community-based and systems-based. The primary difference between the two is the nature of communications and confidentiality protections. Each type of advocate provides an essential component of support for the victim/ survivor. Teams and communities must distinguish between the types of advocacy available and incorporate advocacy that has confidentiality protections to provide the best possible services for victims/survivors.

Systems-based advocates—such as those who are employed by law enforcement or courts— cannot provide confidential services. A systems-based advocate's records can be subpoenaed, or if a victim/survivor shares certain types of information—such as exculpatory information— they are compelled to share that information with other systems professionals. Systems-based advocates or victim-witness advocates typically have limited flexibility in being able to accompany a victim/survivor in all parts of the response process or provide long-term aftercare.

Community-based advocacy—organizations that operate independently, provide comprehensive services, and exist outside of any criminal justice agency. They play a critical role in the system's response to sexual violence and consistently improves outcomes for sexual assault victims/survivors and their cases. Community-based advocacy is typically separated from systems-based advocates in that they are usually the only service providers that can offer confidential services protected by privileged communications statutes.

Inclusion of community-based advocacy—from the point of disclosure to any systems professional—improves the likelihood that victims/survivors will report their assaults, seek further medical care, and continue in the criminal justice process all while reducing distress and negative outcomes.While there are other providers in systems positions such as victim-witness advocates or law enforcement-based advocates, these groups do not offer victims/survivors the same types of protections regarding any information shared during disclosure. Further, community-based advocacy often can provide an array of assistance to victims/survivors outside of the typical types of assistance systems-based advocates can provide. While each type of advocacy provides important response and support elements, teams and providers that intentionally include community advocacy see better case outcomes and long-term success.

CONFIDENTIALITY

Any time where identifying information or case details are discussed, a victim/survivor must have previously provided a release of information that is time-bound and specified to a limited discussion or activity. Therefore, the purpose of the Tarrant County SART meeting is to focus on the elements of the response rather than individual case details to determine possible improvements in response, educational needs, and quality assurance of current agency practices.

Protecting identifying information or case details about a victim/survivor is essential, and the Tarrant County SART members must understand the limits of information sharing for each and every discipline. Agencies shall maintain the confidentiality of records in accordance with state and federal law and their agency operating procedures.

SECTION 3

DISCIPLINE SPECIFIC INFORMATION

ADVOCACY

Advocates play a unique role in the community and systems response to sexual violence in that they are the only member of the response whose sole focus is to be a supportive person to the victim/survivor as well as secondary victims/survivors. Advocates offer information, guidance, and supportive assistance in navigating the healing and justice processes. Advocates can accompany a victim/survivor in nearly all parts of the response— providing support during medical forensic exams and law enforcement interviews, as well as going through the court processes, and providing aftercare. Advocates focus their efforts on validating and supporting a victim/survivor in all of their decisions.

Community-Based Advocacy – The Women's Center of Tarrant County

The Women's Center of Tarrant County opened its doors in 1979 with a Helpline and Employment Program staffed by volunteers. In 1980, the Center adopted a small volunteer rape crisis response team, providing crisis intervention to sexual assault victims at one hospital in the community as well as a 24-hour crisis hotline. Over the next forty years, the Rape Crisis & Victim Services (RCVS) program expanded to include a continuum of services:

- A prevention and education program
- A team of licensed, professional clinical therapists
- A full case management staff to assist with crisis intervention, Crime Victim's Compensation (CVC), information, and referrals
- A team of onsite Hospital Advocates stationed in the John Peter Smith (JPS) emergency department
- A legal team comprised of attorney and paralegal services

Crisis Response and Facilities

- The Women's Center's (TWC) crisis hotline (817-927-2737) and hospital accompaniment response for sexual assault victims operates 24 hours a day, 7 days a week.
- During business hours (Monday-Friday, 9 am-5 pm), the hotline rings to the office, and a member of the Crisis team will answer the line. If there is a request for hospital accompaniment services, a staff member or volunteer advocate will respond to provide the service.
- There are fifteen SAFE facilities in Tarrant County—John Peter Smith (JPS) hospital; Texas Health (TH) Harris Methodist; TH Harris Southwest; TH Arlington Memorial; TH HEB; TH Alliance; TH Azle; Medical City (MC) Alliance; MC Arlington; MC Fort Worth; MC North Hills; MC Grand Prairie; MC Saginaw; MC White Settlement; MC Haslett
- All advocates, both staff and volunteers, receive an initial 40-hour sexual assault training, certified by the Office of the Attorney General (OAG), which includes both classroom and field training hours. All trained advocates are then required six continuing education units a year to maintain certification.

- An advocate from TWC is offered for every adult sexual assault victim in the community.
    - The Women's Center has a 100% response rate to hospitals when called for accompaniment.
    - All services within the TWC, Rape Crisis & Victim Services Department (RCVS) are free of charge to the survivors.

    - When a victim of sexual assault arrives at an area hospital, the emergency department will contact TWC's hotline to notify the agency there is a victim who requires a forensic exam accompaniment.
    - An advocate will arrive onsite within approximately 30 minutes to meet with the victim.
    - The advocate's role is to provide emotional support, information, and crisis intervention and occasionally serve as a liaison between the victim, the hospital, and/or law enforcement.
    - By victim request, the advocate may sit in on a law enforcement interview or in the medical exam as the nurse collects evidence.
    - The advocate is also available to support and provide information to any significant others present during the exam.
    - The advocate is responsible for ensuring the victim's rights are afforded during the exam and investigative process.
    - The standard practice is to accompany the patient from the time the advocate arrives to the victim's discharge.
    - The advocate will collect all needed information from medical staff.
    - The victim will receive a check-in call two weeks after the hospital visit from TWC staff offering support and resources.

Hospital Advocate Program

- TWC employs three full-time licensed Master-level Hospital Advocates who are stationed onsite at JPS hospital every day of the week, including Saturday and Sunday.
- The full-time Hospital Advocates provide immediate accompaniment, support, and case management to sexual assault patients and other patients who have suffered any other type of violent crime.
- Outside full-time Hospital Advocate response hours, field "backup" staff or volunteers provide forensic exam accompaniments to JPS, Texas Health, and Medical City facilities.

Law Enforcement Accompaniment

- In an effort to follow trauma-informed investigation techniques, legislation (HB 1172) dictates before conducting an investigative interview with an adult victim, a peace officer is required to offer the presence of a certified sexual assault program advocate to be present, if one is available at that time.
- If one is not immediately available, the officer may use a victim services or victim witness council, or a sworn officer that has completed the Office of the Attorney

General (OAG) 40- hour sexual assault program training.

- As a certified sexual assault program, TWC provides advocates as support to the victim during the investigative interview.
- The advocate will respond wherever the interview is being conducted.
- All communication between the advocate and the victim is privileged and confidential.

Criminal Justice Accompaniment

- When requested by the victim or court personal, TWC provides advocates for court accompaniment to provide support and information.

Though TWC advocates individually respond to sexual assault victims on the hotline and at area hospitals, the advocate and the agency as a whole work together as part of the interdisciplinary team to coordinate intervention, treatment, investigation, and prosecution for the victim.

  - **Intervention:** Area hospital contacts RCVS advocate to request exam accompaniment or law enforcement contacts RCVS for an investigative interview accompaniment.
  - **Treatment:** The advocate serves as a support through the forensic exam and medical process.
  - **Investigation:** The advocate provides accompaniment, when requested by the victim, during investigative law enforcement interview(s).
  - **Prosecution:** The advocate provides accompaniment, when requested by the victim, at any juncture in the prosecutorial process.
- These collaborative practices are made to ensure victims' rights and that their health and safety are attended to and addressed.

Continuum of Services

- An additional focus of intervention by RCVS advocates is to funnel victims into the TWC's continuum of services.
- Services include clinical individual and group counseling, the 24-hour crisis hotline, legal services, and case management.
- Master-level, licensed clinicians provide clinical services.
- Master-level social workers provide Case Management services.
- A licensed attorney and paralegal provide legal services.
- Community Education Department provides training to community partners to prepare for trauma-informed response in the community.
- TWC has access to a language line for all languages, including American Sign Language.

Notifications

- When a victim of sexual assault arrives at an area hospital, the emergency department will contact TWC's hotline to notify the agency there is a victim who requires a forensic exam accompaniment.
- An advocate will arrive onsite within approximately 30 minutes to meet with the victim.

- The advocate's role is to provide emotional support, information, and crisis intervention and occasionally serve as a liaison between the victim, the hospital, and/or law enforcement.
- By victim request, the advocate may sit in on a law enforcement interview or in the medical exam as the nurse collects evidence.
- The advocate is also available to support and provide information to any significant others present during the exam.
- The advocate is responsible for ensuring the victim's rights are afforded during the exam and investigative process.
- The standard practice is to accompany the patient from the time the advocate arrives to the victim's discharge.
- The advocate will collect all needed information and two weeks after the hospital visit, the victim will receive a check-in call from TWC staff offering support and resources.

Hospital Advocate Program

- TWC employs three full-time Master-level Hospital Advocates who are stationed onsite at JPS hospital every day of the week, including Saturday and Sunday.
- The full-time Hospital Advocates provide immediate accompaniment, support, and case management to sexual assault patients and other patients who have suffered any other type of violent crime.
- Outside full-time Hospital Advocate response hours, field "backup" staff or volunteers provide forensic exam accompaniments to both JPS and the Texas Health facilities.

Law Enforcement Accompaniment

- In an effort to follow trauma-informed investigation techniques, recent legislation (HB 1172) dictates before conducting an investigative interview with an adult victim, a peace officer is required to offer the presence of a certified sexual assault program advocate to be present, if one is available at that time.
- If one is not immediately available, the officer may use a victim services or victim witness council, or a sworn officer that has completed the Office of the Attorney General (OAG) 40- hour sexual assault program training.
- As a certified sexual assault program, TWC provides advocates as support to the victim during the investigative interview.
- The advocate will respond wherever the interview is being conducted. All communication between the advocate and the victim is privileged and confidential.

- TWC routinely offers the required OAG training to victim service professionals in the community to ensure their department complies with the legislation, should there be a circumstance in which TWC is not available to respond to an interview request coordination of care Though TWC advocates individually respond to sexual assault victims on the hotline and at area hospitals, the advocate and the agency as a whole work

together as part of the interdisciplinary team to coordinate intervention, treatment, investigation, and prosecution for the victim.

- **Intervention:** Area hospital contacts RCVS advocate to request exam accompaniment or law enforcement contacts RCVS for an investigative interview accompaniment.
- **Treatment:** The advocate serves as a support through the forensic exam and medical process.
- **Investigation:** The advocate provides accompaniment, when requested by the victim, during investigative law enforcement interview(s).
- **Prosecution:** The advocate provides accompaniment, when requested by the victim, at any juncture in the prosecutorial process.

- These collaborative practices are made to ensure victims' rights and that their health and safety are attended to and addressed.

Continuum of Services

- An additional focus of intervention by RCVS advocates is to funnel victims into the TWC's continuum of services.
- Services include clinical individual and group counseling, the 24-hour crisis hotline, legal services, and case management.
- Master-level, licensed clinicians provide clinical services.
- Master-level social workers provide Case Management services.
- A licensed attorney and paralegal provide legal services.
- TWC has access to a language line for all languages, including American Sign Language.

BEHAVIORAL HEALTH

My Health My Resources of Tarrant County (MHMR Tarrant) provides behavioral health services to people in the community with intellectual and developmental disabilities (IDD), mental health conditions, and substance use disorders. **MHMR Tarrant** provides trauma-informed services that are person-centered and provide choice.

Services are voluntary, and the individual can participate in the services they choose that they are eligible for. Patient information is kept confidential, following HIPAA (Health Insurance Portability and Accountability Act) guidelines. MHMR Tarrant has access to language lines for almost all languages, including American Sign Language.

Mental Health Peer Specialists, Recovery Support Peer Specialists, and Veteran Peer Specialists are available to support adults in services. Family Partners can support parents/guardians of children in services. Services can be accessed 24 hours a day, 365 days a year by contacting the ICARE Line.

Call or text: 800-866-2465

Local call: 817-335-3022

TTY: 817-569-4488

The Mental Health Law Enforcement Liaison Project offers support to all Tarrant County peace officers 24 hours a day, 365 days a year. They provide technical assistance and are a risk management tool for law enforcement agencies dealing with mental health situations. The staff is available to law enforcement officers at the designated number for their use only.

MHMR Tarrant collaborates with community organizations to provide services. MHMR Tarrant can link people to resources and other services based on individual needs and choices.

JPS Health Network provides a full continuum of behavioral health services, including inpatient services at Trinity Springs Pavilion, emergency behavioral health services at the Psychiatric Emergency Center, and outpatient services at JPS outpatient clinics.

- Outpatient Behavioral Health at 817-702-3100 or Inpatient Behavioral Health at 817-702-3636
    - Acute Inpatient Care
    - Adolescent Inpatient Care
    - Local Commitment Alternative Services
    - Outpatient Behavioral Health Services
    - Peer and Family Services
    - Psychiatric Emergency Center

LAW ENFORCEMENT

Law Enforcement provides safety, investigation, and case follow-up for victims/survivors of sexual violence. While there are different types of officers based on agency sizes and resources, the key element that carries across law enforcement types is the primary focus on investigating and establishing the elements of a crime. From taking the initial reports, to filing, law enforcement focuses its efforts on increasing public safety.

This section addresses recommendations to be used for law enforcement in investigating adult sexual assault reports in Tarrant County. These recommendations are a guideline for law enforcement to help establish best practices in community response to adult victims of sexual assault. Each investigation and offense will determine what portions will be utilized along with the policies and procedures of each agency and are not

intended to supersede individual agencies' policies or procedures but to improve the overall coordination and enhance the response to sexual assault from law enforcement.

Initial Investigative Response (Patrol/First Responder)

- Patrol officers and supervisors should be trained on investigative expectations while managing sexual assault calls/scenes.
- Police 911 caller-takers should have a script as it relates to Sexual Assault 911 calls. This aids in maintaining safety for the victim, crime scene security/preservation of evidence, obtaining initial information for first responders to aid in the identity and location of the suspect(s), the identity of witnesses, identity of the suspect vehicle, and direction of travel if applicable as well as maintains confidentiality of the victim. (See 911 Script Attachment)
- A Patrol Supervisor should be involved in the initial response to assess the call/situation and ensure a properly coordinated response occurs and appropriate notifications are made for any immediate Criminal Investigation Department (CID) response if necessary.

Managing the Scene and Victim Contact

- Locate/secure the scene of the offense.
- Provide any immediate medical intervention necessary.
- Sexual assault victims themselves can be a crime scene. Depending on the nature of the offense, discourage the victim from urinating, drinking, brushing their teeth, and bathing.
- Obtain necessary details from the victim to establish offense and information to secure/preserve crime scene(s), evidence, the identity of suspects, and any witnesses.
- Utilize additional officers or resources to manage the scene(s), and preserve/locate evidence, witnesses, and suspect(s).
- Obtain complete victim Information including alternate contact phone numbers, social media info if available, and/or email address.
- Complete the Tarrant County Adult Sexual Assault Packet, documenting details of the offense, and provide the victim with the victim notification sheet. (The Tarrant County Sexual Assault packet is for **adult victims only**. If the victim is an adult and is reporting a delayed offense when they were a child, the Sexual Assault packet does **NOT** apply). If the victim chooses to use a pseudonym, use the victim's initials on this form.
- If the victim uses a pseudonym, (CCP 57B.02), the **only** location the victim's real name, address and phone number shall appear is on the pseudonym form.
- All police reports including the Tarrant County Adult Sexual Assault Packet shall reflect the victim's pseudonym information if the victim elects to use a pseudonym. The victim's initials are to be used as the pseudonym. Ensure other officers on the call complete a report or supplement and use the victim's pseudonym information in their report.
- Offer the victim a sexual assault examination. Within 120 hours, police cannot decline the SANE exam

(HB2462, CCP Art 56A.251) Officers cannot force an exam if the victim declines the SANE exam.

- Notify the hospital when the officer/victim is en-route. These facilities are the primary accessibility/locations in Tarrant County for sexual assault forensic examinations.

John Peter Smith (JPS) Hospital 817-702-7829

Texas Health Resources (THR) Hospitals – Alliance 682-212-2300 Azle 817-444-8667

Arlington 817-960-6205 FTW 817-250-3333 HEB 817-848-4611 Southwest 817-433-1281

- If possible, have the victim bring a change of clothing to the hospital to wear after the exam is completed.
- Officers will be required to complete and sign a Texas Attorney General Authorization form for the sexual assault exam (Per HB616, CCP Art., 56A.251 d) while at the hospital. If the victim uses a pseudonym, use the victim's initials on this form.
- The hospital will notify Tarrant County RAPE Crisis (If the Victim goes to the Hospital) and a RAPE Crisis Victim Advocate, if not already present, will respond to the Hospital (CCP Art 56A.351).
- Obtain consent for the release of medical records from the victim (if the victim receives medical treatment beyond the sexual assault exam). This medical release form should be included in the Tarrant County Adult Sexual Assault packet. The victim shall use their real name on the consent form, regardless of if the victim used a pseudonym.
- The officer should remain with the victim at the hospital until the completion of the forensic exam if possible. The purpose is to ensure that if additional information or evidence is found during the exam that it is relayed to law enforcement. This also ensures that if the victim has additional needs or follow-up questions after the exam, they can be addressed.
- The police agency's Victim's Assistance/Victim Advocate should be notified if the victim does **NOT** go to the hospital.
- Rape Crisis Counseling information/resources and Victim Assistance contact information shall be provided to the victim (CCP Art., 56.02).
- Collect the victim's clothing of evidentiary value worn at the time of the offense.
- Collect the victim's clothing of evidentiary value worn to the hospital or any other clothing of evidentiary value that the SANE did not collect.
- If a victim believes they were drugged or had a loss of consciousness from a possible drug-facilitated sexual assault, toxicology (blood and urine) should be taken during the sexual assault exam.
- Upon completion of the exam the sexual assault kit, toxicology samples, and clothing will be placed in the hospitals locked safe. It may be necessary to collect items that will not fit into the safe as evidence.
- Crime scene will photograph/document the victim's injuries (if applicable).
- The officer will complete an offense report with their police agency, documenting what the victim reported, witness statements, and the facts and details of their investigation.

Processing/Managing the Scene (Offense Location and or Suspect)

- Consent to search obtained or search warrant obtained by Detective (if applicable/necessary) for the crime scene where the offense occurred.
- If necessary, Crime Scene will respond and process the crime scene(s).
- If possible, all evidence should be photographed, or video recorded before collecting.
- Document where the evidence was located, who located it, who collected it, and note the date and time collected.
- Consider bedding - Is the suspect known or unknown? Will the suspect's DNA already be there legally?
- Collect, document, and photograph any item that would provide evidence the sex was or was **NOT** consensual (torn clothes, force was used, blood evidence, weapon, etc.).
- Locate/secure any additional crime scenes.
- Locate/secure any video evidence-
    - Consider cell phones as evidence and obtain a passcode if possible.
    - Photograph any messages that may be lost, especially messages from dating websites and other social media such as Snapchat. (They are erased if either person blocks the other).
    - DO NOT take the victim's cell phone if evidence can be collected through screenshots, emailing video or photos, or photographs of the phone screen.
- If the suspect is arrested, consider an EPO for the victim (CCP Article 17.292) if requested or necessary/mandatory.
- Depending on the offense, consider if the suspect's clothing worn at the time of the offense may be of evidentiary value.
- Depending on the time/details of the offense, consider taking swabs of the suspect if the victim's DNA may be present. (Example- on the suspect's fingers for digital penetration or penis swabs for penile contact). Use crime scene for this if available. If possible, for penis swabs use the same gender to take swabs and perform it in a controlled environment/private location.
- Obtain a buccal swab of the suspect's DNA (saliva), under consent if possible. Record/document consent on body-worn camera (BWC).
- Depending on the details/time of the offense, consider whether to collect the suspect's fingernail scrapings under exigent circumstances or a search warrant.
- Photograph the suspect and any potential injuries.
- Consult with detectives before interrogation of the suspect. If interrogated, record interrogation on a body-worn camera (BWC) under Miranda and document.
- Ensure witnesses are fully identified and interviewed.
- Canvass area for other witnesses and or evidence. Especially look for potential cameras that might have captured information (Ring cameras, home security, etc.).
- The detective responds to the scene if necessary.

Investigative Follow-Up CID

- Once notified, the police agency has seven (7) calendar days to collect the victim's sexual

assault kit from the hospital (HB8).

- After receiving the victim's sexual assault kit, the police agency has thirty (30) calendar days to submit the kit to an accredited lab for analysis (SB1636, Government Code 420.042).
- The police agency shall enter the whereabouts of the victim's sexual assault kit in the State's Track-Kit system (HB281, Gov't Code 420.024) after receiving the sexual assault kit and submitting it to an accredited lab for analysis.
- If the victim underwent a SANE exam, obtain a copy of the SANE Medical Protocol from the hospital.
- The CID detective will contact and conduct a follow-up interview with the victim.
- The CID detective shall inform the victim of their right to have a victim advocate as defined under Section 420.003 Government Code be present during the investigative follow-up interview (HB 1172 CCP Art 56A.3515).
- The CID detective will consider whether a sample of the suspect's DNA is necessary for the case/investigation. If the suspect's DNA is necessary, a sample of the suspect's DNA shall be obtained through consent or a search warrant.
- Consider preservation requests if necessary for cell phone records, cell tower records, and/or social media sites pending a search warrant.
- Obtain consent to search and eliminate any possible consensual partner's DNA that may be present in the victim's sexual assault kit.
- The CID detective shall follow up on any evidence not previously obtained related to the case.
- If a suspect is unknown to the victim and/or witnesses, the CID detective shall follow their department's eyewitness identification policy/procedure when presenting photo lineups or live lineups (CCP Article 38.20).
- The CID detective should consider obtaining a voluntary statement from the suspect and any witnesses related to the case.
- To help prove or disprove consent, or elements of the offense, the CID detective should consider offering a voluntary polygraph examination to the suspect.
- CID detectives will **not** request or require the victim to undergo a polygraph examination (HB1172, CCP Article 15).
- The CID detective will conduct a fair, impartial, and thorough investigation to determine whether there is probable cause to issue an arrest warrant or charge the suspect with the offense.

- The CID detective will document the details of their investigation in a supplement to the original report, ultimately providing a disposition to the outcome of the investigation/case.
- CID detectives have the Tarrant County Criminal District Attorney's Adult Sexual Assault Prosecution Team as a resource in the investigation and consultation of the case if necessary.

Interagency Information Sharing

- For interagency information sharing with Local, State, and Federal law enforcement agencies, the police agency will enter relevant information and details of the sexual assault into the FBI's (VICAP), Violent Criminal Apprehension Program (Molly Jane's Law HB 3106, Subchapter B, Chapter 420.036 Government Code).

HEALTH PROFESSIONALS

The role of medical personnel in the response to sexual assault is to provide victims/survivors with critical access to medical and/or psychological services. The goal is to provide compassionate and sensitive medical care in a non-judgmental, victim-centered manner. Sexual assault is traumatic, regardless of the presence of physical injuries. Healthcare providers can help reduce the neurobiological response to trauma by providing trauma- informed care that restores safety, security, and control to patients.

It is best practice to have all sexual assault medical forensic examinations performed by a specially trained forensic nurse certified as a sexual assault nurse examiner/forensic nurse examiner (SANE/FNE). Throughout the response, the health professional focuses on the health and well-being of the victim/survivor. The SANE/FNE can uniquely give accurate health information, provide timely medical treatment, informed reporting options, and ensure access to follow-up services.

The Primary Objectives for the Healthcare Provider are:

- Treatment for emergent medical conditions before, or concurrently with, addressing forensic issues such as evidence collection
- Timely patient forensic medical examinations and treatment
- Access to advocacy services
- Evidence recognition, preservation, and the collection as indicated by patient history or examination findings. Evidence collection is important, but is secondary to the health and well- being of the patient
- Educate community collaborators on the role of the health care provider
- Work collaboratively with all community members to communicate best practices on an ongoing basis and to share information to assist in the formulation of statistics to allow review of processes for improvement of delivered services

Healthcare Providers can accomplish these Objectives by:

- Having on-site nurses in the hospital specialized in the field of forensic nursing
    - If SANE/FNE is not on-site - report to the hospital facility within 1 hour or less.
    - If the advocate is not on-site - contact the Tarrant County Women's Center for advocacy accompaniment at the healthcare facility.
- Provide the patient with the mandated Texas Department of Safety and Health Service's "Information Sheet for Sexual Assault Patients" to assist the patient with making informed decisions regarding care during the sexual assault
- Treating the patient as one would any other traumatized patient that is seen in a medical facility and understanding the value and integrity of evidence collection
- Providing assessment, diagnosis, and/or treatment of the patient assuring life-threatening injuries are identified and treated
- Providing a medical forensic examination by a specially trained medical professional including complete evidence collection and forensic photography

- Providing treatment appropriate to the patient's injuries, including but not limited to prophylaxis for sexually transmitted infections and emergency contraceptive protection
- Providing HIV testing and access to follow-up care and medications

The Medical Facility

If a patient presents to the healthcare facility Federal Emergency Medical Treatment and Active Labor Act (EMTALA), legislation requires that persons presenting to a hospital emergency department must have a medical screening to determine if an emergent condition exists requiring interventions.

In all patient interactions, it is important to maintain the confidentiality of forensic medical information and documentation including but not limited to:

- The Health Insurance Portability and Accountability Act (HIPAA) applies to this patient population.
- Policies should be in place regarding the process for the Release of Information and obtaining records and/or photographs; the method used to identify the patient in the photographs.
- Documentation that photographs exist in the permanent medical record for each patient.

Each medical facility designated as a **Safe Ready Facility** by the Texas Attorney General's Office should meet the minimum standard of practice by providing but not limited to: (Health and Safety Code Chapter 323).

- A dedicated room or a room that can be easily converted to use for the examination. The room should be able to be locked from the inside and have a bathroom and/or shower attached if possible.
- A quiet comfortable place, out of the public space of the facility where the patient can wait for the examination to begin. This space can also be used for advocate accompaniment, clinical support staff, and law enforcement to speak with and counsel the patient, partner, and/or family.
- Appropriate equipment is available to illuminate body surfaces with an alternate light source, to allow identification of the patient's injuries and facilitate the accurate documentation of injuries.
- Maintaining the confidentiality of the patient and integrity of evidence collected as well as the patient's forensic medical records
- The Texas Health and Human Services Information Form - **https://www.hhs.texas.gov/sites/default/files/documents/sa-survivor-safe-info.pdf**

SAFE Ready Designated Facilities for Adult Sexual Assault (S/A) Exams in Tarrant County

- **John Peter Smith Hospital (JPS)**
  (817) 702-7829 ER (817) 702-7263 SAFE Suite
  - Forensic Nurse Examiners for victims of S/A and other violent crimes available in the ER: Sunday-Friday & every other Saturday
    - After hours, On-call Nurse Examiners respond 24/7 for S/A exams
  - On-site Hospital Advocates from The Women's Center available 7 days a week for all victims of crime
    - After hours, On-call Advocates respond 24/7 for S/A exam accompaniment

- **Texas Health Resources (THR) Hospitals – Alliance 682-212-2300, Azle 817-444-8667 Arlington 817-960-6205, FTW 817-250-3333, HEB 817-848-4611, Southwest 817-433-1281**

  - Nurse Examiners available to respond to the above THR locations 24/7
  - On-call advocates from The Women's Center available to report to each facility for S/A exam accompaniment 24/7

Intake Medical Personnel Triage

- Patients who report acute sexual assault, or those who are suspected of being sexually assaulted, should have an Emergency Severity Index (ESI) Triage Level 2 (U.S. Department of Health and Human Services, 2012).
- The patient should be seen as soon as possible and triaged to assess for life or limb threatening injuries or psychiatric emergencies. These emergencies take precedence over forensic evidence collection.
- Strangulation and head trauma are medical emergencies requiring physician evaluation before or concurrently with the medical forensic examination.
- Once the patient is stable, offer a forensic medical assessment. The medical assessment may take place before or concurrently with forensic sexual assault assessment, depending on facility policy and ensuring the patient consents to this treatment plan.
- Escort the patient and family, caregiver, or support person(s) to a private waiting area.
- Elicit information as privately as possible, regarding:
  - Safety (Is the patient safe or is the suspect present - speaking with the patient alone is important to obtain accurate information)
  - Pain &/or bleeding
  - Instruct patient not to use the restroom, wash, change clothes, smoke, eat or drink until evaluated by the forensic health care professional.
    - If patients must use the restroom - collect the urine, and advise that they do not wipe genitalia until after the evidence has been collected
  - Consider collecting urine if drug/substance-facilitated sexual assault (DFSA) is suspected (maintain chain of custody of specimens)
  - Does the patient want to report this incident to police? If so, facilitate LEA request forms (if not already completed)

- Contact a sexual assault advocate for hospital accompaniment if the patient consents.
- If not at the medical facility, notify the forensic healthcare professional and inform them of the patient's arrival.
- Advise patient of expected wait times.

Reporting/Non-Reporting Options

Adult survivors of sexual assault have the option of reporting or not reporting the offense to law enforcement. The Sexual Assault Evidence Collection Kit (SAEK) does not have to be used for a sexual assault examination to occur. SAEKs should be used only when indicated.

REPORTING - includes reporting the incident to the Law Enforcement Agency (LEA) in the jurisdiction in which the sexual assault occurred.

- **If the assault occurred within 120 hours** the patient shall have access to all support services at no cost to them including:
    - Health care treatment
    - Sexual assault forensic evidence collection
    - Access to a sexual assault advocate
    - Ability to track sexual assault evidence through various stages of the criminal justice process. (Texas Government Code §420.034, 2017)

- **If the assault occurred greater than 120 hours** the patient shall have access to all support services listed above at no cost to them if:
    - Based on the circumstances, the LEA believes a sexual assault exam would further investigation or prosecution or
    - After a medical evaluation by a physician or a sexual assault nurse examiner, the physician or examiner notifies the LEA that a sexual assault exam should be conducted. (Article 56.251 (c).

NON-REPORTING - patient chooses not to report to a LEA and requests a forensic medical examination.

- **If the assault occurred within 120 hours -** the patient shall have access to all support services listed above at no cost to them.
- Responsibility for payment of the medical component of the assessment and examination may rest on the patients, and they are eligible for reimbursement through Crime Victim's Compensation (CVC). The patient shall be informed that:
    - Sexual assault evidence will not be processed unless the patient reports the crime to law enforcement. (Texas Code of Criminal Procedure §56.A.301-56A309).
    - Victims have up to five years after the incident to report to a LEA.
    - Responsibility for payment of the medical component of the assessment and examination may rest on the patient and they are eligible for reimbursement through CVC.
- **If the assault occurred greater than 120 hours** - patients shall still have access to:

- Health care treatment
- A Health care provider may do sexually transmitted infection testing
- Access to a sexual assault advocate
- Referrals for services as needed

The Medical Forensic Examination

- Consent is an ongoing process and must be obtained to perform a sexual assault medical forensic examination. Patients must have the capacity to consent and consent can be given or withdrawn at any point during the exam.
- The Medical forensic exam has four parts:
  - A detailed history
  - Head-to-toe physical examination looking for injury
  - Detailed Genital Examination
  - Identification and collection of forensic evidence as indicated by history and examination findings
- The Medical Portion further requires:
  - Formulating a medical and/or nursing diagnosis
  - Formulating a medical and nursing care plan
  - Healthcare intervention involving injuries & addressing any medical concerns
  - Reviewing the process to ensure all needs are met and referrals are made
  - Treatment prophylactically for sexually transmitted infections and or pregnancy per the CDC guidelines

Sexual Assault Evidence Tracking Program – TRACK-KIT (Texas Government Code 420.034).

- Requires systems to track the status and location of each item of evidence through various stages of the criminal justice process, allows entities involved in the handling of the evidence to update and track the status and location of evidence, and allows survivors to anonymously track or receive updates on the status of evidence.
- Participation in the tracking system is required by any entity that collects evidence of sexual assaults or other sex offenses, investigates, or prosecutes such offenses.
- A Health Care Facility or other entity that performs a medical examination to collect evidence of a sexual assault receives signed, written consent to release the evidence. The facility or entity shall:
  - Provide the patient with a unique identification number and explain the purpose of tracking evidence – educate the patient that only the location of evidence is available and that no results to any type of testing are found in the electronic tracking system.
  - Promptly notify any law enforcement agency investigating the offense.
  - **No later than two business days** after the date the examination is performed, enter the identification number of the evidence collection kit into the statewide electronic tracking system Track-Kit.
  - Except as provided by Subsection (c), a law enforcement agency that receives notice from a health care facility or other entity under Subsection (a) shall take possession of the evidence **no later than the seventh day** after the date the law enforcement

agency receives notice.

- A law enforcement agency that receives notice from a health care facility or other entity that is located more than 100 miles from the law enforcement agency shall take possession of the evidence **no later than the 14th day** after the date the law enforcement agency receives notice.

Special Considerations:

- **Mandatory reporting** is required for suspected abuse of the elderly, or an adult person with a disability, regardless of the wishes of the patients, their families, or friends.

- **Adult military-affiliated survivors** must receive information about their reporting options from a person knowledgeable of the Department of Defense policy that defines reporting choices to ensure the patient's rights are not violated.

- **Provision of Emergency Services To Certain Adult Sexual Assault Survivors** (Sec. 323.0044, Health and Safety Code).

  - A health care facility shall provide a forensic medical examination and treatment to an adult sexual assault survivor for whom a guardian is appointed under Title 3, Estates Code, without the consent of the survivor's guardian, guardian ad litem, or another legal agent if:
    - The health care facility determines the survivor understands the nature of the forensic medical examination and treatment; and
    - The survivor agrees to receive the forensic medical examination and treatment.
  - Subject to Subsection (c), if an adult sexual assault survivor requests a forensic medical examination and treatment and a health care facility determines the survivor potentially is incapable of consenting to the forensic medical examination and treatment, the health care facility may:
    - obtain consent from a relative or caretaker of the survivor on the survivor's behalf;
    - obtain consent from the survivor's guardian, guardian ad litem, or another legal agent;
  - Petition a court with probate jurisdiction in the county in which the facility is located for an emergency order authorizing the forensic medical examination and treatment, in the manner provided by Section 48.208, Human Resources Code.
  - If personnel of a healthcare facility know or have reason to believe that the survivor's relative, caretaker, guardian, guardian ad litem, or other legal agent is a suspect or accomplice in the sexual assault of the survivor, the healthcare facility may not contact the survivor's relative, caretaker, guardian, guardian ad litem, or other legal agents.
  - A healthcare facility may not provide a forensic medical examination to an adult sexual assault survivor for whom a guardian is appointed under Title 3, Estates Code, if the survivor refuses the examination, regardless of whether the survivor's guardian requests or consents to the examination.

PROSECUTION

Prosecutors provide the component of the sexual violence response of taking cases into the criminal justice system. Prosecutors explain case decisions, trial preparation, as well as information about the legal system to victims/survivors as well as team members. Members of prosecution teams prioritize accountability to the public as well as seeing justice done.

The Tarrant County Criminal District Attorney shall maintain an Adult Sexual Assault Team (ASA) to handle the vertical prosecution of Sexual Assaults presented to the office. A Victim's Assistance Coordinator (VAC) will also be provided to each case to ensure all applicable Victim's Rights under Chapter 56A are provided to a victim of Sexual Assault.

Adult Sexual Assault Team

The goals and purposes of the Adult Sexual Assault Team (ASA) are to provide:

- A consistent review and screening of all cases involving sexual assaults of adults in Tarrant County
- Experienced prosecutors to guide victims through the criminal justice process;
- Experienced prosecutors to try cases
- Guidance to the community on issues surrounding adult sexual assault.

The ASA will take the following measures to achieve these goals:

- ASA prosecutors will review and do intake on ALL cases involving adult sexual assault on the felony level. In addition, ASA will review misdemeanor indecent assaults and any case in which there is a sexual element of concern to determine if it will be handled by the adult sexual assault team due to the need for sexual assault expertise.
- ASA will indict, retain, and try all felony cases involving adult sexual assault filed with this office on or after November 1, 2019, unless the ASA team determines another unit's expertise is better suited for the facts of the case.
- Cases involving Defendants with already pending cases at intake will be staffed with the original prosecutor to determine if ASA will keep the case or release it to the prosecutor with the prior pending case.
- ASA prosecutors will be available to assist other prosecutors, as needed, by:
    - Sitting second chair during the trial of a case involving adults who have been victimized sexually
    - Providing guidance and resources to prosecutors regarding prosecuting sexually violent offenders
- ASA prosecutors will be available to local police departments, local police academies, and community organizations for training in the area of adult sexual assault.
- ASA will compile and maintain the statistics regarding cases presented to the Tarrant County Criminal District Attorney's Office as required by Govt. Code 351.25.

Victims Assistance Coordinators

In accordance with Article 56A.202 of the Texas Code of Criminal Procedure, a Victims Assistance Coordinator **(**VAC) is responsible for ensuring that a victim is afforded the rights guaranteed by Subchapter B of the Texas Code of Criminal Procedure. The VAC shall work closely with appropriate law enforcement agencies, prosecuting attorneys, the Board of Pardons and Parole, and the judiciary.

The role of VAC includes, but is not limited to:

Providing victims with:

- Information regarding crime victim rights
- Case information and status
- Secure waiting area
- Victim Impact Statements
- Crime Victim Compensation Information
- Protective Order Information
- HIV/STD testing information
- Address Confidentiality assistance
- VINE referrals
- Counseling Referrals
- Community Resources Referrals
- Integrated Victim Services System assistance and connecting with TDCJ victim services after disposition

Supporting victims by:

- Explaining criminal justice processes
- Listening and answering questions
- Encouraging and supporting
- Assessing their needs
- Crisis Intervention
- Safety planning
- Assisting with the completion of victim services paperwork
- Accompanying them to trial and prosecutor meetings
- Intervening with employer/school, and
- Assisting with relocation or housing needs

Case Flow through the Judicial System

Intake

Cases will be presented to the Tarrant County Criminal District Attorney's Office by the arresting agency through the intake portal of the Tech Share Prosecutor (TSP)

- Intake will inform ASA Team of all intakes of Sexual Assault or other crimes in which specialized sexual assault prosecution is advantageous.
- ASA prosecutors will do the intake of the cases. They will make decisions as to whether charges will be accepted, rejected, or returned for more information. In addition, if more investigation or additional items are needed from the arresting agency, ASA prosecutors will reach out to them and request these items.
- ASA prosecutors will ensure that all public filings, including the complaint, use the victim's initials to protect their identity from the public.
- If a case is accepted, ASA prosecutors will prose out the original complaint on TSP and send the Incident to the Intake Support Staff who will finalize the intake of the case.
- ASA will strive for vertical prosecution of most cases to best serve victims of sexual assault. In the event the case needs to be moved to a different team (for example, if the Defendant already has pending cases and another prosecutor is engaged with the victim), ASA will reach out to the assigned prosecutor and offer assistance with the case.

Case Assignment

After intake, cases will be given a case number and assigned to ASA prosecutors by the first letter of the Defendant's last name. VACs are assigned based on court and/or translation needs.

After the case assignment, a VAC will reach out for the first victim contact. In that phone call, VAC will:

- Assess the safety of the call
- Introduce themselves and explain the VAC role
- Provide Case Number
- Provide Contact info for VAC and ASA prosecutor
- Verify current address, phone number, email, and alternate contact if the number is not correct – VAC will reach out to the ASA investigator to try and get a good number for the victim
- Explain the general criminal justice process, and refer them to their ASA prosecutor for specifics
- Explain victims' rights, including:
    - Victim Impact Statement (VIS)
    - VINE notification
    - Crime Victims Compensation (CVC)
    - Safe Waiting Area

    - HIV/STD testing
    - 7B Protective Orders
    - Track-it kit
- Assess needs for resources, including:
    - Counseling
    - Shelter
    - Food Pantries, clothing, financial assistance, legal services
- VAC will send out an initial Packet that includes all the above information from the phone call in paper form. VAC will track when a victim returns the VIS and the request for STD testing.

- After the case assignment, ASA prosecutors will:
    - Reach out for an initial interview with the victim. In that interview, ASA will explain the judicial process, answer any questions, and address concerns the victim may have.
    - Evaluate the bond amount, conditions, and file motions with the Court to address any concerns of inadequacy.
    - Begin looking at what information will be needed for Grand Jury. ASA will have 90 days for Defendants who are in custody and 180 days for Defendants who are out of custody to present to the Grand Jury. Grand Jury subpoenas shall be sought for any information or witnesses deemed necessary for indictment.

Grand Jury

- ASA prosecutors will prepare a Grand Jury Summary detailing all relevant information regarding the case. They will present the case to the Grand Jury and provide legal guidance on the charging decision by the Grand Jury.
- ASA prosecutors will inform the victim of the date of the Grand Jury presentation and prepare the victim for the possible outcomes.
- ASA will ensure that the victim is informed of their rights regarding HIV/STD testing and the ASA legal assistant will prepare the motion for any case in which the victim indicates they want testing performed. If the case is indicted, ASA prosecutors will present that motion to the court for signature within 48 hours of the indictment.
- ASA prosecutors will reach out to the Defense attorney if they indicate they would like to make a Grand Jury presentation. If the presentation meets the requirement and addresses the probable cause, the ASA prosecutor will ensure the Grand Jury is provided with the information.
- ASA prosecutors will contact the victim as soon as returns are issued by the Grand Jury and inform them of the outcome.
- If the case is no-billed, ASA prosecutors will notify the Defense Attorney.
- ASA prosecutors will open all discovery to the Defense on TSP after the indictment.

Docket/Pleas

- Before the first setting, ASA prosecutors will reach out to the victim and talk to them about initial offers. It will be made clear that all offers will be the prosecutor's decision, but all reasonable efforts will be made to include the victim in the offer process.
    - Victims will be given information to track setting notices. If a setting involves a potential court hearing, the victim will be told in case they want to attend.
    - Victims will be kept informed of the negotiation process if they remain in contact with the ASA prosecutor with current contact information.
    - If a case is set to plea, victims will be informed of their right to attend and give an allocution.
    - VACs will work with the victim on their allocution and will accompany them to court on the day the case is set.
    - A secure location will be provided to the victim on the day of the plea.

Trial

- If a case is set for trial, the victim will be notified with as much notice as possible. ASA prosecutors will conduct witness meetings with VACs present if possible.
- VACs will provide a secure area for the victim during the trial and will accompany them to court when they testify and when the verdicts are read. VACs will also coordinate with the ASA investigator for the victim's parking and notes for work/school.
- If a victim chooses to give an allocution, VACs will help them prepare.
- After the verdict, VACs will give appropriate paperwork to victims regarding:
    - Prison and parole
    - Community Supervision
    - VINE
- If a Defendant is convicted of a listed offense under Article 7B.001 of the Texas Code of Criminal Procedure, VAC's will coordinate with the Tarrant County Criminal District Attorney's Protective Order Team to request a 7B-Protective Order if the victim chooses to not opt out.

CORRECTIONS

Corrections bring a unique perspective to the team as well as benefit from collaborative work through streamlined services and increased knowledge of the response. Corrections staff are responsible for compliance with the Prison Rape Elimination Act (PREA).

This set of guidelines works to reduce confusion and increase communications between team members to better facilitate timely responses to sexual assault and facilitate smooth processes for transfer to JPS Emergency Department when sexual assault forensic exams are reported in Tarrant County Jail and a sexual assault exam may be warranted.

In the event an inmate makes an outcry of sexual assault while in the custody of the Tarrant County Jail (TCJ), below is the response following the incident:

- **Security Staff First Responder:**
  - Notifies a jail supervisor
  - Separate the victim from the alleged perpetrator(s)
  - Secure the crime scene, preserve evidence including bodily evidence or clothing of victim &/or alleged perpetrator(s) and maintain chain of custody until released to law enforcement officials
  - Request that the victim and ensure that the alleged perpetrator refrain from actions that could destroy evidence, such as bathing, brushing teeth, changing clothes, urinating, defecating, smoking, eating or drinking until they have been examined by qualified medical personnel
  - Complete an incident report
  - Share information related to the incident only with those people who need to know to ensure the victims safety, conduct the investigation or provide treatment to the victim or alleged perpetrator

- **Non-Security Staff First Responder:**
  - Request that the victim not take any action that could destroy physical evidence
  - Immediately notify security staff

- **Supervisor:**

- Coordinate and oversee the coordinated response process
- Conduct an initial assessment of the allegation
- Ensure preservation of any potential evidence
- Ensure that any alleged staff/inmate/perpetrators are immediately separated from contact with the victim
- Ensure the victim is escorted to medical
- Ask victim if he/she wants to report to law enforcement and speak with a detective for further investigation
- Notify PREA Manager
- Notify Crime Scene Investigator through dispatch
- Notify Criminal Investigation Division Supervisor/Detective Mon-Fri 8am-5pm at Extension 1305 (go through dispatch outside these hours)
- Obtain a service number from dispatch
- Prepare for transport to JPS Hospital if victim agrees to sexual assault examination
- Submit MHMR referral for follow up
- Submit report to PREA Manager and CID Detective through chain of command

- **Facility Medical Staff:**
  - Collect only basic information from the victim and conduct assessment for injuries and/or suicidal risk
  - Provide basic medical care for acute injuries prior to a medical forensic exam
  - Preserve forensic evidence to the extent possible
  - Advise the victim of their rights to a medical forensic exam at no cost and with or without reporting to law enforcement
  - Ask the victim if they want a medical forensic exam: if victim declines an exam document in the medical record
  - Look in EPIC medical record system if the victim has recently been seen for an outcry
  - Confer with the Forensic Nurse team or ER team lead as needed to determine if the necessity of a medical forensic exam
  - Inform the jail supervisor if exam is necessary
  - Document if the alleged perpetrator and/or victim were examined
  - Share information related to the incident with only those who need

to know in order to ensure the victim's safety, conduct the investigation, or provide treatment to the victim or alleged perpetrator

- **Inmate wants to *Report to Law Enforcement* and the incident was *less than 5 days* (120 hours)**
    - Regardless of where the assault occurred, TCJ medical staff will call TC Sherriff to dispatch an officer and TCSO will do a courtesy report for other agencies outside of their jurisdiction.
    - Once the report is made – a Law Enforcement Request Form is signed and given a police report number.
    - Medical staff will contact JPS ER Team Leader to inform them of the transfer for a sexual assault forensic exam. 817-702-7829
    - ER Team Leader will notify the on-call forensic nurse of the transfer to JPS & the ETA of the patient to the ER.

- **Inmate wants to *Report to Law Enforcement* and the incident was *more than 5 days* (120 hours)**
    - TCJ will notify dispatch to notify the Peace Officer to follow up on the report.
    - If TC Sherriff requests a forensic exam for non-acute sexual assault – TCJ medical staff will facilitate transfer and contact JPS ER Team Leader.

- **Inmate *Does Not want to Report to Law Enforcement* and the incident was *less than 5 days***
  (120 hours)
    - Medical Staff will contact JPS ER TL to inform of the transfer for NON-REPORT S/A Forensic Exam.
    - JPS ER TL will notify the on-call nurse of the transfer of the NON-Report Exam for TCJ Inmate.

- **Inmate *Does Not want to Report to Law Enforcement* and the incident was *more than 5 days***
  (120 hours)
    - TCJ Medical staff should address any sexually transmitted infection testing or concerns of pregnancy.

- Provide any medical treatment to the victim at no cost and regardless of if the victim names the abuser or cooperates with the investigation

- *Facility Mental Health:*
  - *Conduct a diagnostic evaluation or crisis assessment to determine the victim's mental health needs and any risk of suicide*
  - *Provide immediate crisis intervention and any needed emergency mental health care to the victim a no cost regardless of whether the victim names the abuser or cooperates with the investigation*

- *John Peter Smith Hospital – JPS Health Network*

  Contact information for questions or transfers from Tarrant County Jail
  - *ER Team Leader 817 - 702-7829 24/7*
  - **Forensics Dept. 817 - 702-7263 Sunday - Friday 10am-10pm**

TARRANT COUNTY
COMMISSIONERS COURT COMMUNICATION

Court Date: December 9, 2025	**Court Order #:**	**Page:** 1 of 1
Department: Elections Administration	**Prepared By:** Troy Havard, Assistant Elections Administrator	**Approved By:** Clinton Ludwig

SUBJECT:

Consideration to Authorize the Elections Administrator to Send Written Notifications of Proposed Voting Precinct Boundary Changes, Approve and Implement Voting Precinct Boundary Changes, and Publish Notice of Voting Precinct Boundary Changes Under Election Code Chapter 42 As Necessary to Comply With Future Court Orders Issued in League of United Latin American Citizens, et al. v. Abbott

***** CONSENT AGENDA *****

COMMISSIONERS COURT ACTION REQUESTED

It is requested that the Commissioners Court consider authorizing the Tarrant County Elections Administrator to take the following actions as necessary to comply with court orders issued in *League of United Latin American Citizens, et al. v. Abbott*: 1) send written notifications on behalf of the Commissioners Court to party chairs, precinct chairs, and presiding judges pursuant to Election Code Section 42.036(b); 2) publish written notification of approved changes to voting precinct boundaries in a local newspaper and on the Tarrant County website pursuant to Election Code Section 42.035; and 3) approve and implement voting boundary precincts pursuant to Elections Code Section 42.031(b)(1) as necessary to comply with the any court order determining what map for U.S. House of Representative districts in Texas must be used.

BACKGROUND

On November 18, 2025, the United States Court for the Western District of Texas issued an order in the case *League of United Latin American Citizens, et al. v. Abbott*, No. EP-21-CV-00259-DCG-JES-JVB, (W.D. Tex. Nov. 18, 2025), temporarily blocking Texas from using the new congressional district map passed in 2025 by the Texas Legislature as HB4 and signed into law by Governor Abbott on August 29, 2025. Subsequently, on November 21, 2025, the United States Supreme Court issued an administrative stay of the lower court's order. The case remains pending before the United States Supreme Court. Due to this ongoing court action, changes to election precinct boundaries may be necessary to ensure Tarrant County complies with Election Code Section 42.005, which prohibits an election precinct from including territory belonging to more than one of six types of electoral territorial units. Election Code Section 42.031(b)(1) permits the Commissioners Court to order a boundary change of election precincts under these circumstances. To comply with Election Code Section 42.036, notice of proposed voting precinct boundary changes must be delivered by the Commissioners Court to party chairs, precinct chairs, and election judges no less than seven (7) days prior to the approval of the boundary changes. Once a boundary change is approved, Election Code Section 42.035 requires the Commissioners Court to publish notice of the approve boundary changes in a newspaper and on the county's website.

In anticipation of future court rulings by the United States Supreme Court, it is requested the Commissioners Court authorize the Elections Administrator to take all actions necessary to implement voting precinct boundary changes in compliance with the Supreme Court's ultimate decision. Specifically, if the Supreme Court determines the redistricted map adopted by the Texas Legislature may not be used, the Elections Administrator will implement voting precinct boundaries as they existed following Commissioners Court order number 145720, approved on August 19, 205, prior to the Texas Legislature's redistricting of U.S. House of Representative districts. In the alternative, if the Supreme Court determines the Texas Legislature's redistricted map may be used, the Elections Administrator will implement voting precinct boundaries as they existed following Commissioners Court order number 146178, passed on October 14, 2025, following the Texas Legislature's redistricting of U.S. House of Representative districts.

Approval of this action will permit the Elections Administrator to act on behalf of the Commissioners Court by sending written notices, approving and implementing voting precinct boundary changes, and publishing notice of the approved boundary changes, all as needed to comply with the Supreme Court's ruling or orders in *League of United Latin American Citizens, et al. v. Abbott*.

FISCAL IMPACT

There is no fiscal impact associated with this action.

TARRANT COUNTY
COMMISSIONERS COURT COMMUNICATION

Court Date: December 9, 2025	**Court Order #:**	**Page:** 1 of 3

Department: Facilities Management	**Prepared By:** Misty Foster	**Approved By:** Frank Lopez

SUBJECT:

Consideration of a Property Use Request from Justice of the Peace, Precinct 7 to Use the Subcourthouse at Mansfield to Conduct Weekend Weddings

***** CONSENT AGENDA *****

COMMISSIONERS COURT ACTION REQUESTED

It is requested that the Commissioners Court consider a request from Justice of the Peace, Precinct 7, to use the Subcourthouse at Mansfield to conduct weekend weddings.

BACKGROUND

Justice of the Peace, Precinct 7, has requested the use of a courtroom in the Subcourthouse at Mansfield to conduct weddings on the following dates:

Saturday, December 6, 2025, at 12:00 p.m.
Saturday, December 13, 2025, at 2:00 p.m.
Saturday, December 20, 2025, at 1:30 p.m.
Saturday, December 27, 2025, at 12:00 p.m.
Saturday, January 11, 2025, at 3:00pm.

All required property use forms have been completed and are attached.

The Constable has agreed to provide security during non-business hours.

FISCAL IMPACT

The estimated fiscal impact of $108.00 per wedding which will be paid by the resident. This estimate is based on salary average overtime rates for Facilities Management and the Constables Office.

Salary cost per wedding will be charged to the following accounts:
Facilities Management account 10000-2026 General Fund/3110217000 Mansfield/ 510000 Personnel
Constables Office account 10000-2026 General Fund/2270100000 Precinct 7/ 510000 Personnel

Attachments

Decemeber and January Property Use Application.pdf

TARRANT COUNTY FACILITIES MANAGEMENT
PROPERTY USE APPLICATION

PLEASE COMPLETE ALL SECTIONS.

Location requested: Justice of the Peace, Precinct 7 Courtroom

Event Date(s): 12-06-25;12-13-25;12-20-25; 12-27-25

Time of event: 12:00 P.M.; 2:00 P.M.; 1:30 P.M.; 12:00 P.M.

Description of event (if more than three lines, please provide an attachment):

Wedding Ceremony

_____ Electricity required

_____ Set up equipment (tables/chairs/podium/speakers, etc.) requested from County

Contact Person: Kenneth D. Sanders

Address: 1100 E Broad St, Ste 202 City: Mansfield State: TX Zip: 76063

Cell phone number: 817-454-1684 Email: kdsanders3@tarrantcountytx.gov

Name of Organization: _____

____ Non-Profit ____ For-Profit

Primary contact person: _____

Address: _____ City: _____ State: ___ Zip: _____

Business phone number: _____ Email: _____

Event on-site contact person & cell phone number: _____

Applicant's signature: Kenneth D. Sanders

Applicant's printed name: Kenneth D. Sanders

Date: 11/21/2025

RELEASE, INDEMNIFICATION AND HOLD HARMLESS AGREEMENT

THAT I, the undersigned Kenneth D. Sanders, hereby **RELEASE** and **HOLD HARMLESS** Tarrant County, Texas("County") and all of its officials, officers, agents and employees in both their public and private capacities, from any and all claims, losses, damages, causes of action, suits and liability of every kind that may arise from any of their act(s) and/or omission(s) that may occur as a result of my request to seek their help, assistance, and/or service in connection with Wedding Ceremony.

It is further agreed that the execution of this **"Release, Indemnification and Hold Harmless Agreement"** will not constitute a waiver by the County of the defense of governmental immunity where applicable, or any other defense recognized by law and/or the courts of the State of Texas.

SIGNED this the 21st day of November, 20 25.

Signature: Kenneth D. Sanders

Printed Name: Kenneth D. Sanders

Address: 1100 E Broad St, Ste 202

City: Mansfield **State:** TX **Zip Code:** 76063

Phone #: 817-454-1684

TARRANT COUNTY FACILITIES MANAGEMENT
PROPERTY USE APPLICATION

PLEASE COMPLETE ALL SECTIONS.

Location requested: Justice of the Peace, Precinct 7 Courtroom

Event Date(s): 01-11-2026

Time of event: 3:00 P.M.

Description of event (if more than three lines, please provide an attachment):

Wedding Ceremony

____ Electricity required

____ Set up equipment (tables/chairs/podium/speakers, etc.) requested from County

Contact Person: Kenneth D. Sanders

Address: 1100 E Broad St, Ste 202 City: Mansfield State: TX Zip: 76063

Cell phone number: 817-454-1684 Email: kdsanders3@tarrantcountytx.gov

Name of Organization: _____

____ Non-Profit ____ For-Profit

Primary contact person: _____

Address: _____ City: _____ State: ___ Zip: _____

Business phone number: _____ Email: _____

Event on-site contact person & cell phone number: _____

Applicant's signature: Kenneth D. Sanders

Applicant's printed name: Kenneth D. Sanders

Date: 11/21/25

RELEASE, INDEMNIFICATION
AND HOLD HARMLESS AGREEMENT

THAT I, the undersigned Kenneth D. Sanders, hereby **RELEASE** and **HOLD HARMLESS** Tarrant County, Texas("County") and all of its officials, officers, agents and employees in both their public and private capacities, from any and all claims, losses, damages, causes of action, suits and liability of every kind that may arise from any of their act(s) and/or omission(s) that may occur as a result of my request to seek their help, assistance, and/or service in connection with Wedding Ceremony.

It is further agreed that the execution of this **"Release, Indemnification and Hold Harmless Agreement"** will not constitute a waiver by the County of the defense of governmental immunity where applicable, or any other defense recognized by law and/or the courts of the State of Texas.

SIGNED this the 21st day of November, 20 25.

Signature: Kenneth D. Sanders

Printed Name: Kenneth D. Sanders

Address: 1100 E Broad St, Ste 202

City: Mansfield **State:** TX **Zip Code:** 76063

Phone #: 817-454-1684

TARRANT COUNTY
COMMISSIONERS COURT COMMUNICATION

Court Date: December 9, 2025	**Court Order #:**	**Page:** 1 of 1
Department: Facilities Management	**Prepared By:** Jon P. Hendrickson	**Approved By:** Tom Stallings

SUBJECT:

Consideration to Temporarily Change the Lighting of the 1895 Courthouse for Sundance Square's New Year's Eve 2026 Celebration

***** CONSENT AGENDA *****

COMMISSIONERS COURT ACTION REQUESTED

It is requested that the Commissioners Court approve temporarily changing the lighting of the 1895 Courthouse for the Sundance Square New Year's Eve Celebration on December 31, 2025.

BACKGROUND

Sundance Square will host its annual New Year's Eve Celebration in downtown Fort Worth on December 31, 2025. The event attracts thousands of attendees each year and features entertainment throughout the evening, concluding with a midnight countdown and fireworks.

The lighting change will support the event and align with downtown activities planned for the celebration.

If approved, Facilities Management will temporarily change the lighting of the 1895 Courthouse to purple for the event on December 31, 2025.

FISCAL IMPACT

All associated costs are budgeted within Facilities Management's approved budget.

TARRANT COUNTY
COMMISSIONERS COURT COMMUNICATION

Department: Facilities Management **Prepared By:** Riley P. Ornelas **Approved By:** Frank Lopez

SUBJECT:

Consideration of a Professional Services Contract with Baird, Hampton and Brown for Engineering Services for the Lighting Upgrade Project at the Correction Center

***** CONSENT AGENDA *****

COMMISSIONERS COURT ACTION REQUESTED

It is requested that the Commissioners Court consider accepting a professional services contract with Baird, Hampton and Brown for engineering services for the Lighting Upgrade Project at the Corrections Center.

BACKGROUND

On April 26, 2022, the Commissioners Court, through Court Order #138003, approved Request For Qualification (RFQ) No. 2022-098 – Annual Contract for Professional Architectural-Engineering Services, for various Tarrant County projects. With approval of RFQ No. 2022-098, the Facilities Management Department and Purchasing Department were granted approval to utilize the selected firms for indefinite quantities of work, as outlined in the RFQ, per contract terms. Firms will be issued a Tarrant County purchase order or will be required to sign a contract for individual projects, depending on the type and cost of the work. Baird, Hampton and Brown was one (1) of the firms that received the highest evaluated ratings from the evaluation committee as having qualifications to meet the County's needs for indefinite quantities of work as outlined in the RFQ.

Most of the facility's lighting is original to the building, with only a small portion upgraded to LED. The other existing fixtures include halogen, high-pressure sodium, fluorescent, and incandescent bulbs, all of which consume significantly more energy than LEDs. Upgrading these fixtures to LED will reduce power usage, improve overall energy efficiency, and decrease electrical demand on the emergency backup generator system.

The Criminal District Attorney's Office has reviewed this contract as to form.

FISCAL IMPACT

Funding in the amount of $84,500.00 is available in account 45400-2026 Capital Improvement/3110307000 Corrections Center Building/540000 Capital Outlay.

PASSED AND APPROVED on December 9, 2025.

COUNTY OF TARRANT
STATE OF TEXAS

By: Separate Electronic Signature Page
Tim O'Hare
County Judge

APPROVED AS TO FORM:

_____
District Attorney's Office*

*By law, the District Attorney's Office may only approve contracts for its clients. We reviewed this document as to form from our client's legal perspective. Other parties may not rely on this approval. Instead, those parties should seek contract review from independent counsel.

Attachments

Supporting Documentation - PSC Proposal and 1295 - TCCC Lighting Upgrade.pdf

STATE OF TEXAS §
§ **PROFESSIONAL SERVICES CONTRACT**
COUNTY OF TARRANT §

This contract is entered into between Tarrant County, Texas, hereinafter referred to as COUNTY, Baird, Hampton and Brown, hereinafter referred to as PROVIDER, for the purpose of providing professional engineering services which the Commissioners Court finds serves a public purpose and serves the public welfare of the citizens of Tarrant County.

1.
SCOPE OF SERVICES

PROVIDER shall provide professional engineering services (the "Services") for the Lighting Upgrade Project at 100 N. Lamar St, Fort Worth, Texas 76196 (the "Project"), said renovations to be defined by COUNTY and mutually agreed to by PROVIDER. This Professional Services Contract (PSC), and with the Proposal for engineering services dated October 23rd, 2025, from PROVIDER, shown in Exhibit "A", forms the contract between the parties.

The Services to be provided by the PROVIDER as outlined more specifically in Exhibit "A" shall include, but are not limited to, the following:

1.1 Provide the electrical engineering design for the referenced project in sufficient detail to receive construction bids from subcontractors and in sufficient detail to install the systems in accordance with applicable codes. Deliverables will include original drawings (CADD Plots) and specifications prepared for binding separately. Drawings will be sealed by a Registered/Licensed Professional Engineer.
1.2 The design will be in accordance with criteria and guidance received from the Owner.

2.
TERM

This contract commences December 9th, 2025 and concludes on the date services are completed.

3.
COST

3.1 For the services described in "Article 1. Scope of Services" and as defined in PROVIDER'S proposal contained in Exhibit "A", the PROVIDER'S compensation for these services shall be eighty-four thousand and five hundred dollars and zero cents ($84,500.00) and shall not exceed this amount without prior authorization from the County.

Electrical Design	$ 46,500.00
Cost Estimate	$ 5,000.00
Bidding Services	$ 5,000.00
Construction Administration	$ 18,000.00
Reimbursables	$ 10,000.00
TOTAL NOT TO EXCEED AMOUNT	$84,500.00

3.2 PROVIDER shall bill for the Services performed in accordance with this contract.
3.3 PROVIDER shall send all invoices to Tarrant County Facilities Management, 200 Taylor St., Suite

344, Fort Worth, TX 76196.

3.4 PROVIDER'S invoice shall detail the Services provided;

3.5 PROVIDER'S invoice may include reimbursable expenses such as printing, postage, out of County travel, and additional OAC meetings, etc. related to the Project. Reimbursable expenses will not exceed $10,000.00. Expenses will be invoiced at Actual cost. Supporting receipt documentation must be submitted. All unused allowances will be returned to Tarrant County.

3.6 No travel expenses are included in this contract.

PROVIDER understands that PROVIDER shall be responsible for any other expenses incurred by PROVIDER in performing the Services under this contract.

4.
AGENCY-INDEPENDENT CONTRACTOR

Neither COUNTY nor any employee thereof is an agent of PROVIDER, and neither PROVIDER nor any employee thereof is an agent of COUNTY. This contract does not and shall not be construed to entitle either party or any of their respective employees, if applicable, to any benefit, privilege or other amenities of employment by the other party.

5.
ASSIGNMENT

Neither party may assign, in whole or in part, any interest it may have in this contract without the prior written consent of the other party.

6.
THIRD PARTY BENEFICIARY EXCLUDED

This contract shall not be interpreted to inure to the benefit of a third party not a party to this contract. This contract may not be interpreted to waive any statutory or common law defense, immunity, including governmental and sovereign immunity, or any limitation of liability, responsibility, or damage of any party to this contract, party's agent, or party's employee, otherwise provided by law.

7.
AUDIT OF RECORDS

PROVIDER'S records for this Project are subject to audit by the COUNTY during the term of this contract.

8.
FORM 1295

PROVIDER acknowledges and agrees that it has fully, accurately, and completely disclosed all interested parties in the Form 1295 electronically filed with the Texas Ethics Commission, at https://www.ethics.state.tx.us/filinginfo/1295/, as required by law, and that the attached signed copy attached as Exhibit "B" is a full and true copy of said filed form.

9.
GOVERNMENT CODE COMPLIANCE

9.1 **Boycott of Israel Prohibited**. In compliance with Section 2271.001 et seq. of the Texas Government Code, PROVIDER verifies that neither it nor any of its affiliates currently boycott Israel and neither it nor any of its affiliates will boycott Israel during the term of this contract. "Boycott Israel" is defined in Section 808.001(1) of the Texas Government Code.

9.2 **Scrutinized Business Operations Prohibited**. In compliance with Section 2252.151 et seq. of the Texas Government Code, PROVIDER warrants and represents that: (1) neither PROVIDER nor any of its affiliates engages in scrutinized business operations in Sudan; (2) neither PROVIDER nor any of its affiliates engages in scrutinized business operations in Iran; and (3) neither PROVIDER nor any of its affiliates engages in scrutinized business operations with designated foreign terrorist organizations. "Scrutinized business operations in Sudan" is defined in Section 2270.0052 of the Texas Government Code. "Scrutinized business operations in Iran" is defined in Section 2270.0102 of the Texas Government Code. "Scrutinized business operations with designated foreign terrorist organizations" is defined in Section 2270.0152 of the Texas Government Code. PROVIDER further represents and warrants that neither PROVIDER nor any of its affiliates appears on any of the Texas Comptroller's Scrutinized Companies Lists.

9.3 **Discrimination Against Firearm Entities or Firearm Trade Associations Prohibited**. In compliance with Section 2274.002 of the Texas Government Code, PROVIDER verifies that neither it nor any of its affiliates have a practice, policy, guidance, or directive that discriminates against a firearm entity or firearm trade association; and neither it nor any of its affiliates will discriminate during the term of the contract against a firearm entity or firearm trade association. "Discriminate against a firearm entity or firearm trade association" is defined in Section 2274.001(3).

9.4 **Boycott of Certain Energy Companies Prohibited**. In compliance with Section 2276.002 of the Texas Government Code, PROVIDER verifies that neither it nor any of its affiliates currently boycott energy companies and neither it nor any of its affiliates will boycott energy companies during the term of this contract. "Boycott energy company" is defined in Section 809.001(1) of the Texas Government Code.

10.
COMPLIANCE WITH LAWS

In providing the services required by this contract, PROVIDER must observe and comply with all applicable federal, state, and local statutes, ordinances, rules, and regulations, including, without limitation, workers' compensation laws, minimum and maximum salary and wage statutes and regulations, and non-discrimination laws and regulations. PROVIDER shall be responsible for ensuring its compliance with any laws and regulations applicable to its business, including maintaining any necessary licenses and permits.

11.
GENERAL TERMS

This contract represents the entire understanding of and between the parties and supersedes all prior representations. This contract may not be varied orally, but must be amended by written document of subsequent date duly executed by these parties. This contract shall be governed by the laws of the State of Texas and venue for any action under this contract shall be in the state and federal courts located in Fort Worth, Texas.

12.
TERMINATION

This contract may be terminated by either party by providing written notice to the other party at least thirty (30) days prior to the intended date of termination. Any notice or other writing required by this contract, shall be deemed given when personally delivered or mailed by certified or registered United States mail, return-receipt, postage prepaid, addressed as follows:

COUNTY:
Frank Lopez
Tarrant County Facilities Management
200 Taylor Street, Suite 344
Fort Worth, TX 76196

PROVIDER:
Paul Morris, PE
Baird, Hampton & Brown
6300 Ridglea Place, Suite 700
Fort Worth, TX 76116

13.
EXECUTION OF AGREEMENT

This contract may be executed in one or more counterparts, each of which will be deemed to be an original copy of this contract, and all of which, when taken together, shall be deemed to constitute one and the same agreement. The exchange of copies of this contract and of signature pages by electronic transmission shall constitute effective execution and delivery of this contract as to the parties and may be used in lieu of the original contract for all purposes. Signatures of the parties transmitted or executed electronically shall be deemed to be their original signatures for any purpose whatsoever.

[Remainder of Page Intentionally Left Blank]

PASSED AND APPROVED on _____.

COUNTY OF TARRANT
STATE OF TEXAS

By: Separate Electronic Signature Page
Tim O'Hare
County Judge

PROVIDER:
Baird, Hampton & Brown

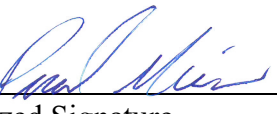

Authorized Signature

APPROVED AS TO FORM:

Separate Electronic Signature Page
District Attorney's Office*

*By law, the District Attorney's Office may only approve contracts for its clients. We reviewed this document as to form from our client's legal perspective. Other parties may not rely on this approval. Instead, those parties should seek contract review from independent counsel.

CERTIFICATION OF FUNDS IN THE AMOUNT OF $_____

Separate Electronic Signature Page
Auditor

EXHIBIT A

BAIRD, HAMPTON & BROWN

6300 Ridglea Place, Suite 700
Fort Worth, Texas 76116
817.338.1277

November 20, 2025

Jason Hewitt
Tarrant County Facilities Project Manager
Tarrant County Facilities Management

RE: CORRECTIONS CENTER LIGHTING REPLACEMENT

Dear Jason:

We appreciate the opportunity to offer our proposal to provide electrical design for the referenced project as we discussed by email on October 1, 2025. The project consists of providing design for lighting and power to replace all the existing lighting at the Corrections Center.

Our fee proposal makes the following assumptions:

- We understand that the entire project will be designed at one time; no phasing of design has been included aside from delineating lighting to be installed by Tarrant County Facilities personnel in secured areas versus lighting to be replaced by a contractor in unsecured areas.
- Lighting fixture selection will be provided by others.
- Our scope assumes that the lighting controls in the secured areas will not be required to meet energy code requirements and will remain the same. Any lighting replacement in the secured areas will be limited to retrofitting and rebulbing existing fixtures with LED products.
- Our scope does not include sound system design, audio/visual system design, security system wiring, telephone system wiring design, nor data system wiring design. Rough-in conduits will be designed as defined by the Owner.
- Our scope will include certification for the electrical systems but will not include the building envelope.
- Our proposal assumes no assessment or modification of existing generator or standby power distribution systems.
- Included as part of our base proposal is one coordination meetings during the design of the project. We have not included regularly scheduled design review meetings with the Owner and/or Design Team as a part of our base fee.
- We cannot be responsible for equipment delivery that affects construction schedules.
- Our fee proposal is based upon producing the Contract Documents using AutoCAD.

- It is our understanding that existing circuits and panelboards will be sufficient for powering the new lighting systems. Any upgrade to existing electrical distribution is excluded from our scope of work.
- Construction Administration:
    - Review and response to contractor's request for information (RFIs) during bidding and construction.
    - Review of submittals and determine compliance of shop drawings for the items required by the construction documents related to the electrical design requirements.
        - 10 business days to review each submittal. Expedited reviews will be performed as additional services.
    - Eight site visits during construction for the purpose of reviewing work completed.
        - A written field report of our observations shall be submitted for each visit.
        - If additional trips are required, it will be considered additional services and billed at the hourly rates identified in the general conditions.
- The following items are not included in our basic services:
    - Energy modeling, i.e. for IECC compliance.
    - Commissioning of electrical systems.

The GENERAL CONDITIONS attached hereto is made a part of this Agreement.

We propose to provide the electrical engineering design for the referenced project in sufficient detail to receive construction bids from subcontractors and in sufficient detail to install the systems in accordance with applicable codes. Deliverables will include original drawings (CADD Plots) and specifications prepared for binding separately. Drawings will be sealed by a Registered/Licensed Professional Engineer.

The design will be in accordance with criteria and guidance received from the Owner via communication from you. Criteria will also include the following:

1. One copy of Owner-approved floor plans in AutoCAD format.

In consideration of the scope described above we propose the following stipulated sum fees:

Electrical Design	$46,500
Cost Estimate	$5,000
Bidding Services	$5,000
Construction Administration	$18,000
Subtotal	$74,500
Reimbursables	$10,000

Invoices will be forwarded to your office based upon the percentage of design completed during each billing period and will be due upon receipt of each invoice. Stipulated sum includes travel expenses for travel to the project site, but does not include reproduction expenses, other than single copy originals for final drawings. Travel expenses, plotting and reproduction expenses, other

than those identified above will not be incurred without your prior approval, at which point these expenses will be payable under the same conditions as the stipulated sum.

Compensation to BHB for the basic services shall be as described in the agreement. If BHB sees the Scope of Services Changing so that additional services are needed, BHB will notify the client for approval before proceeding. Additional Services shall be computed based on the BHB hourly rate schedule as shown below:

Eng. & Management – Principal/VP	$ 325.00 /hr.	Eng. EIT - I	$ 105.00 /hr.
Eng. PE - V	$ 270.00 /hr.	Designer - IV	$ 205.00 /hr.
Eng. PE - IV	$ 225.00 /hr.	Designer - III	$ 150.00 /hr.
Eng. PE - III	$ 190.00 /hr.	Designer - II	$ 125.00 /hr.
Eng. PE - II	$ 175.00 /hr.	Designer - I	$ 105.00 /hr.
Eng. PE - I	$ 145.00 /hr.	CAD / Drafting Services	$ 95.00 /hr.
Eng. EIT - IV	$ 135.00 /hr.	Clerical Services	$ 85.00 /hr.
Eng. EIT - III	$ 125.00 /hr.		
Eng. EIT - II	$ 115.00 /hr.		

BHB reviews hourly rates annually. The rates listed above are subject to change each year in the first quarter.

We will consider receipt of a P.O. as our notice to proceed. Thank you for the opportunity to work with you on this project.

Sincerely,
Baird, Hampton & Brown

Paul Morris, P.E.
Senior Associate | Electrical Engineer

CERTIFICATE OF INTERESTED PARTIES

EXHIBIT B

FORM 1295

Complete Nos. 1 - 4 and 6 if there are interested parties.
Complete Nos. 1, 2, 3, 5, and 6 if there are no interested parties.

OFFICE USE ONLY
CERTIFICATION OF FILING

Certificate Number:
2025-1392162

Date Filed:
11/20/2025

Date Acknowledged:

1 Name of business entity filing form, and the city, state and country of the business entity's place of business.

Baird, Hampton & Brown, Inc.
Fort Worth, TX United States

2 Name of governmental entity or state agency that is a party to the contract for which the form is being filed.

Tarrant County

3 Provide the identification number used by the governmental entity or state agency to track or identify the contract, and provide a description of the services, goods, or other property to be provided under the contract.

Tarrant Cty Corrections Center
Professional Engineering Services to Replace All the Existing Lighting at the Tarrant County Corrections Center

4 Name of Interested Party	City, State, Country (place of business)	Nature of interest (check applicable)	
		Controlling	Intermediary
Randall, Kenneth	Fort Worth, TX United States	X	
Strevey, Tracy	Fort Worth, TX United States	X	
Watters, Richard	Fort Worth, TX United States	X	
Baird, John Austin	Grapevine, TX United States	X	
Snyder, Jeremy	Fort Worth, TX United States	X	
LaCroix, Joseph	Fort Worth, TX United States	X	
Wallace, Chad	Fort Worth, TX United States	X	
Nave, Shannon	Weatherford, TX United States	X	
Bost, Ian	Fort Worth, TX United States	X	

5 Check only if there is NO Interested Party. ☐

6 UNSWORN DECLARATION

My name is Ana Garcia, and my date of birth is 04/12/1971.

My address is 6300 Ridglea Place, Ste 700, Fort Worth, TX, 76116, USA.
(city) (state) (zip code) (country)

I declare under penalty of perjury that the foregoing is true and correct.

Executed in Tarrant County, State of Texas, on the 20 day of November (month), 20 25 (year).

Ana Garcia

Signature of authorized agent of contracting business entity
(Declarant)

TARRANT COUNTY
COMMISSIONERS COURT COMMUNICATION

Department: Facilities Management **Prepared By:** Savannah S. Hawk **Approved By:** Jon P. Hendrickson

SUBJECT:

Consideration of Change Order No. 1 to Fast-Trak Construction, Inc. Construction Services Contract for the Precinct 2 Open Garage

*****CONSENT AGENDA *****

COMMISSIONERS COURT ACTION REQUESTED

It is requested that the Commissioners Court consider approval of Change Order No. 1 to Fast-Trak Construction, Inc. construction services contract for the Precinct 2 Open Garage project.

BACKGROUND

On September 3, 2025, the Commissioners Court, through Court Order #145888, awarded RFP No. F2025172, Construction Services for Open Garage at Precinct 2, to Fast-Trak Construction, Inc. at a cost of $1,808,258.38.

Change Order No. 1 utilizes Owner's Contingency within the overall total approved project budget to increase the contract value by $6,970.00. It does not impact the duration of the contract and includes the following scope of work adjustments:

Proposed Change Order (PCO) 3 - Addresses the realignment of the Precinct 2 water service main associated with the Open Garage project. In the future, this main also serves the Precinct 2 Building Expansion project planned for construction in mid-2026. This realignment reduces the overall length of pipe and adds an 8" valve. This will enable a more efficient and far less costly connection when the building expansion project commences.
Adds $6,970.00

FISCAL IMPACT

Funding in the amount of $6,970.00 is available in account 45100-2026 Non-Debt Capital/6210200000 Precinct #2 Garage/540000 Capital Outlay.

Original Contract Total	$1,808,258.38
Change Order No. 1	$ 6,970.00
Revised Contract Total	$1,815,228.38

PASSED AND APPROVED on December 9, 2025.

COUNTY OF TARRANT

STATE OF TEXAS

By: Separate Electronic Signature Page
Tim O'Hare
County Judge

APPROVED AS TO FORM:

_____
District Attorney's Office*

*By law, the District Attorney's Office may only approve contracts for its clients. We reviewed this document as to form from our client's legal perspective. Other parties may not rely on this approval. Instead, those parties should seek contract review from independent counsel.

Attachments

Pct 2 CO 1 Backup.pdf

Tarrant County

Facilities Management
Construction Services

POTENTIAL CHANGE ORDER **PROJECT NUMBER - PCO 3** **Fast Track ☒**

PROJECT TITLE: Precinct 2 – Open Parking Garage DATE: 11/14/2025

CHANGE REQUESTED BY:

☐Client Department ☐Contractor ☒Design Professional
☒Facilities Management ☐Other TC Department

REVISION REQUIRED DUE TO:

☒Design Changes ☐Design Discrepancy ☐Management
☐Unknown Condition ☐User Request

REASON FOR CHANGE:

CM PCO #: 03 COST ESTIMATE: $6970.00 + (0) days

POTENTIAL CHANGE LANGUAGE

CHANGE REQUEST TITLE: ASI#1R

CHANGE REQUEST DESCRIPTION: This PCO is to revise trench layout & revise plumbing piping and fixtures for main water line as per design change
Pursuant to the Architectural Supplemental Instruction (ASI #1 Revised), the water line layout has been revised to be shorter with fewer fittings. This revision also facilitates future expansion by allowing additional connections without the need to excavate the entire line or shut off water service to the entire building increasing the quantity of valves.

ATTACHMENTS: Northridge Construction Group PCO – 03 / ASI #1

DOCUMENT REFERENCE (DRAWING NUMBERS/ SPEC SECTIONS/ PR NUMBER): As noted on the attachments.

PROJECT MANAGER:
☒Recommend ☐Not Recommend
NAME: Husain Al-Rammah
SIGNATURE: Husain Al-Rammah
DATE: Husain Al-Rammah (11/17/2025 17:13:51 CST)

SR. FACILITIES MANAGEMENT:
☒Recommend ☐ Not Recommend
NAME: Jon P. Hendrickson
SIGNATURE: Jon Hendrickson
DATE: Jon Hendrickson (11/18/2025 14:44:51 CST)

DEPARTMENT: ☒Accept ☐Reject
NAME:
SIGNATURE: Milissa Warner
DATE: Milissa Warner (11/18/2025 11:52:09 CST)

ELECTED OFFICIAL: ☐Accept ☐ Reject
NAME:
SIGNATURE:
DATE:

Routing:
FL – Approved ☒ FL
DI – CCC ☐ FL
complete

Savannah Hawk
Savannah Hawk (11/18/2025 08:34:52 CST)

Final Cost:
Court Approval Date:
Court Order Number:
Owner Change Order Number:
Budget Reallocation Number:

TARRANT COUNTY

DEPARTMENT OF FACILITIES MANAGEMENT

DATE: November 17, 2025

TO: Tom Stallings – TC FM Director - Interim

FROM: Jon Hendrickson, Assistant Director – Construction Services

JH

JH

RE: Precinct #2 – Open Parking Garage – PCO 03

This Change Order 1 has been written to address the realignment of the Pct 2 water service main associated with the Open Garage project. In the future this main also serves the Pct 2 Building Expansion project planned for construction mid-2026. This realignment reduces the overall length of pipe as well as bends in the line reducing static pressure. The team used this opportunity to adjust where the valves are to be installed as well as adding one valve. This will enable a more efficient and far less costly connection when the building expansion is built. This work is currently underway and is directly on the critical path of the work. This change is being written as an expedited change order in order to mitigate schedule impact to the project.

This work will be funded from the current project contingency – within the County total project budget. It will increase the contractors contract amount, but not the total approved project budget. No time extension is being requested.

The total project amount requested is $6,970.00. If approved, this change order will reconcile the additional cost for the changes to the work.

1) Does this need to be done – Yes -The work being addressed now will reduce costs for the future project at an efficient cost for the work at this time.
2) Does the “client” know- Yes- Pct 2, Jason Thomas assisted in making these decisions – These actions were specifically reviewed and approved in the OAC meeting 11/12/25.
3) Justification: The time and related cost impacts are due to revisions to improve the functionality of the system.
4) Does this align with the larger scheme of work planning: yes, in pursuit of the timeliest completion date as well as long-term cost reduction for the County.

Please indicate concurrence of review for submission of the C2C: _____ Init

TARRANT COUNTY

DEPARTMENT OF FACILITIES MANAGEMENT

DATE: November 14, 2025

TO: David Story, Project Manager
Fast Track Construction

FROM: Jon P. Hendrickson, Assistant Director – Construction Services

JH

RE: Precinct #2 – Open Parking Garage – PCO 03

We are in receipt of PCO No. 03 (RFI 01 / ASI 01) in the amount of $6,970.00. This PCO is to:

Revise trench layout and plumbing piping & fixtures for the main water line service as per design change.

Pursuant to the Architectural Supplemental Instruction (ASI #1 Revised), the water line layout has been revised to be shorter with fewer fittings. This revision also facilitates future expansion by allowing additional connections without the need to excavate the entire line or shut off water service to the entire building increasing the quantity of valves.

The description of work and cost breakdown have been reviewed and found to be acceptable. The Contract Time will be increased by zero (0) days for this work.

Please implement PCO No. 03 into Change Order No. 1

FAST-TRAK CONSTRUCTION, INC.

Proposed Change Order # 3R4

To: Tarrant County **11/14/2025**
Attention: Jon Hendrickson
Project Name: Precinct 2 Parking Garage
Project Address: 1203 E Kennedale PKWY Kennedale

From: Andrea Tharel
Fast-Trak Construction

DESCRIPTION OF WORK		COST
ASI 1 WATER REVISIONS		
Applicable Drawings / RFI's / Submittals (if any): ASI 1 Revised, RFI 1, C3-6		
General Conditions: (clerical, insurance, supervision)		
Proposed trench layout:		
10" DR 14 Water Pipe *CREDIT 41LF* (For 10" PVC Water Main: DEDUCT $54.60 per linear foot.)		$ (2,238.60)
8" DR14 Water Pipe 17LF (For 8" PVC Water Main: ADD $74.80 per linear foot.)		$ 1,271.60
10"x 8" Tee		$ 3,389.00
10"x 6" Tee		$ 3,133.00
Concrete repair reduction 28 SY(For Concrete Trench Repair: DEDUCT $19 per linear foot.)		$ (532.00)
6" Gate Valve *(Per discussion on 11/11 Teams Meeting)*		$ 1,947.00
Subtotal		$ 6,970.00
Overhead/Profit		
Sales Tax	8.25%	
Total Price		$ 6,970.00

This change will increase the schedule by () days. This COR amount is valid for (10) days.

By executing this Change Order Request Form, I indicate my agreement to the work stated above. The cost associated herewith do not include any design and/or construction management fees that will be applicable to this project.

ACCEPTED AND AGREED TO:

By: _____

Dated: _____

ARCHITECT'S SUPPLEMENTAL INSTRUCTIONS

Project Name:
Tarrant County Precinct 2
Open Parking Garage

Owner:
Tarrant County Precinct 2

Contractor:
FAST-TRAK Construction

ASI No.: 01 Revised

Issue Date: 11/14/2025

Project No.: 23013-00

Contract For: General Construction

Contract Date: TBD

Owner: [x]
Architect: [x]
Consultant: [x]
Contractor: [x]
Field: [x]
Other: [ ]
File: [x]

Submit an itemized proposal for changes in the Contract Sum and/or Contract Time for the proposed Supplemental Instruction modification(s) to the contract documents described herein. Within fourteen (14) days, the Contractor shall submit the proposal or notify Hahnfeld Hoffer Stanford in writing, of the date which the proposal will be submitted. The Work, when approved, shall be carried out in accordance with the described Supplemental Instructions and in accordance with the Contract Documents.

THIS IS NOT A CHANGE ORDER, A CONSTRUCTION CHANGE DIRECTIVE, OR A DIRECTION TO PROCEED WITH THE WORK DESCRIBED IN THE PROPOSED MODIFICATION(S).

Description:
Refer to attached drawings where highlighted by revision cloud for revision.

CIVIL DRAWINGS

1. **C3-6 – WATER PLAN**
   a. Revised water line routing where highlighted.
2. **WATER QUANTITY COMPARISON Sheet**
   a. Revised to reflect water line revisions from C3-6

Attachments
Civil Full Size Drawing Sheet/s 01
Civil 8.5 x 11Memo 01

Issued by Hahnfeld Hoffer Stanford A GHC Studio:



Eric Hahnfeld / Principal Architect

(Signature)

(Printed Name / Title)

END OF ASI (Except Attachments)

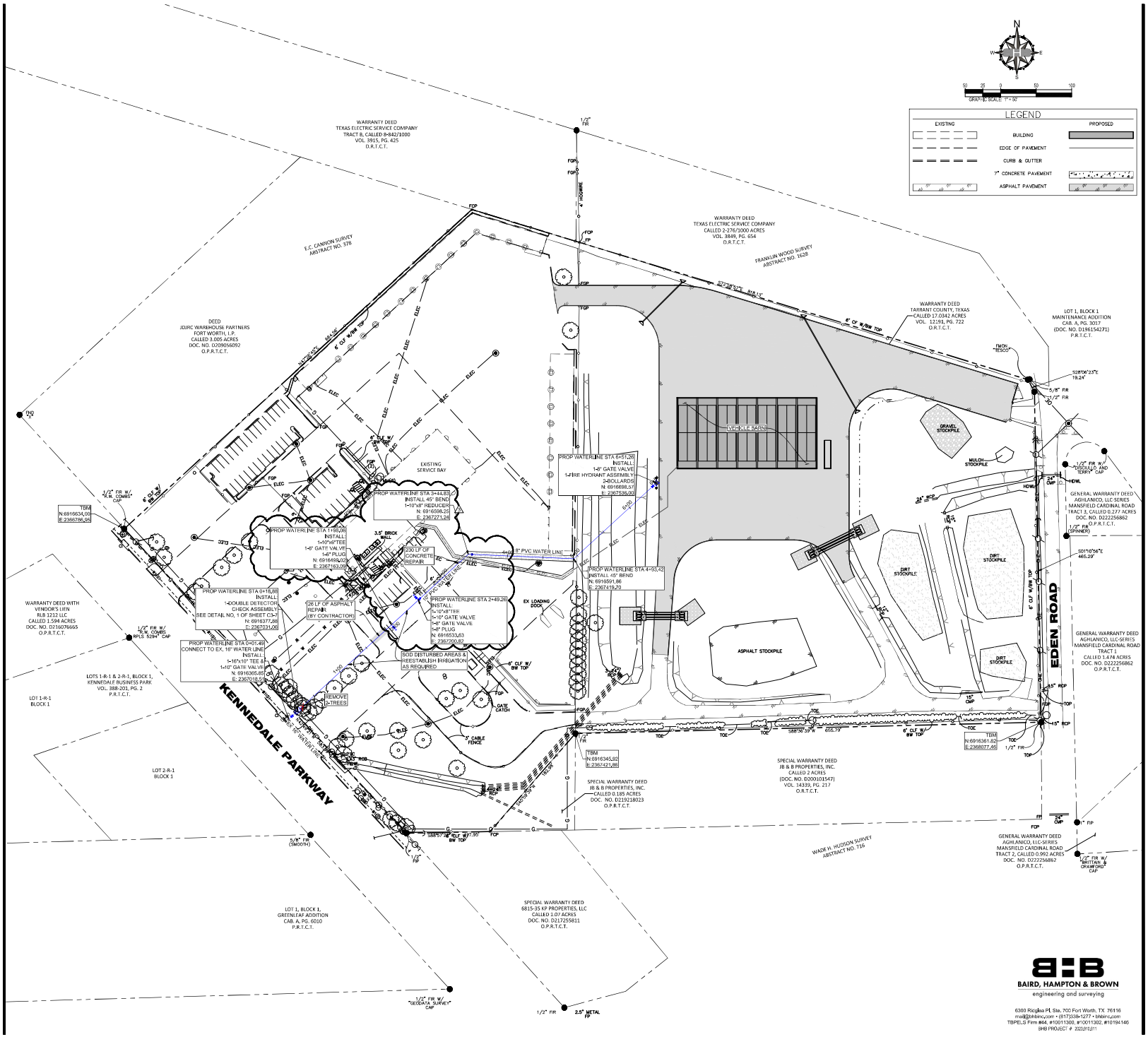

KEYED NOTES

GENERAL NOTES

1. ALL LINES, GRADES, CONSTRUCTION STAKING AND LAYOUT SHALL BE THE RESPONSIBILITY OF THE CONTRACTOR.
2. PRIOR TO BEGINNING CONSTRUCTION, CONTRACTOR SHALL VERIFY ALL DIMENSIONS IN THE FIELD AND REPORT ANY DISCREPANCIES TO THE OWNER'S AGENT.
3. CONTRACTOR SHALL IMPLEMENT AND MAINTAIN EROSION AND SEDIMENTATION CONTROL MEASURES THROUGHOUT THE CONSTRUCTION PERIOD.
4. SEDIMENT THAT IS ERODED FROM THE CONSTRUCTION SITE AND DEPOSITED ONTO ADJACENT PROPERTIES SHALL BE REMOVED BY THE CONTRACTOR AT CONTRACTOR'S EXPENSE.
5. ALL DIMENSIONS ARE TO FACE OF CURB, EDGE OF PAVEMENT, FACE OF WALL, OR FACE OF CONCRETE BUILDING FOOTING UNLESS SHOWN OTHERWISE.
6. ALL DIMENSIONS ARE PARALLEL OR PERPENDICULAR TO NORTH AND EAST BEARING OF N90°00'00"E UNLESS INDICATED OTHERWISE.
7. EXISTING UTILITY DATA IS PROVIDED FOR INFORMATION ONLY. ALTHOUGH SHOWN AS ACCURATELY AS POSSIBLE, THE CONTRACTOR IS RESPONSIBLE FOR COORDINATING WITH MUNICIPAL AND FRANCHISE UTILITY COMPANIES AND LOCATING ALL UTILITIES IN THE FIELD PRIOR TO CONSTRUCTION.
8. CONTRACTOR SHALL COORDINATE AND PAY FOR ALL UTILITY WORK TO BE DONE BY FRANCHISE UTILITY COMPANIES AND/OR CITY FORCES.
9. CONTRACTOR SHALL PROTECT ALL EXISTING UTILITIES, OVERHEAD UTILITY POLES, AND GUY LINES THROUGHOUT CONSTRUCTION.
10. CONTRACTOR SHALL CONTACT TEXAS 811 AT LEAST 48 HOURS PRIOR TO CONSTRUCTION (WWW.TEXAS811.ORG, TEL 800-344-8377).
11. ALL MATERIALS AND WORKMANSHIP SHALL CONFORM TO THE LATEST STANDARD SPECIFICATIONS FOR PUBLIC WORKS CONSTRUCTION FOR NORTH CENTRAL TEXAS AND CITY CRITERIA.

REVISIONS

	REVISIONS	DENOTED BY △
1	ADDENDUM 1	09/27/2025
2	ASI 1	10/31/2025
3	ASI 1 REVISED	11/12/2025

BAIRD, HAMPTON & BROWN
engineering and surveying
6300 Ridglea Pl, Ste. 700 Fort Worth, TX 76116
mail@bhbinc.com • (817)338-1277 • bhbinc.com
TBPELS Firm #44, #10011300, #10011302, #10194146
BHB PROJECT # 2022.0201

Hahnfeld Hoffer Stanford
A GHC STUDIO
200 Bailey Ave., Suite 200
Fort Worth, Texas 76107
817.921.5928

CIVIL ENGINEER
BAIRD, HAMPTON & BROWN, INC.
6300 RIDGLEA PLACE, SUITE 700
FORT WORTH, TEXAS 76116
TEL 817.338.1277
FAX 817.338.2245

MECH. / PLBG. / ELEC. ENGINEER
BAIRD, HAMPTON & BROWN, INC.
6300 RIDGLEA PLACE, SUITE 700
FORT WORTH, TEXAS 76116
TEL 817.338.1277
FAX 817.338.2245

STRUCTURAL ENGINEER
FRANK W. NEAL AND ASSOCIATES (FWNA), INC.
1015 W. BROADWAY AVE.
FORT WORTH, TX 76104
TEL 817.332.1944

SECURITY CONSULTANT
SALAS O'BRIEN
15508 WRIGHT BROTHERS DR.
ADDISON, TX 75007
TEL 972.239.1505

STATE OF TEXAS
PETER J. CARAVANO
144783
LICENSED
PROFESSIONAL ENGINEER
11/12/2025

Tarrant County Facilities Management

Precinct 2 (SEMC) OPEN PARKING GARAGE

1203 E. Kennedale Pkwy, Kennedale, Texas

PROJECT #:	20JFW23013-00
MANAGER:	PC
ISSUED FOR:	CONSTRUCTION
DRAFTER:	WK
ISSUE DATE:	04/01/2025
CHECKED:	AB

WATER PLAN

SHEET

C3-6

Copyright © 2025 Hahnfeld Hoffer Stanford

E:\2023_000\2023_0100\01 - Tarrant County Precinct 2\01 Design & Drafting\02 Civil\110_01 Water Plan.dwg
11/12/2025 2:39:10 PM

Baird, Hampton & Brown
3801 William D. Tate, Suite 500
Grapevine, TX 76051
Tel 817-251-8550, www.bhbinc.com

WATER QUANTITY COMPARISON

TARRANT COUNTY PRECINCT 2 GARAGE

1203 Kennedale Pkwy, Kennedale, TX 76060

No.	Item Description	Unit	Original QTY	Revised QTY	
1	Fire Hydrants	EA	1	1	
2	Double Detector Check Asembly	EA	1	1	
3	10" Gate Valve	EA	2	2	
4	8" Gate Valve	EA	2	2	
5	6" Gate Valve	EA	0	1	
6	10" PVC	LF	385	344	Reduction
7	8" PVC	LF	290	307	Increase
8	16"x10" Tap	EA	1	1	
9	Fittings	TN	0.37	0.50	Increase
10	Concrete Repair	SY	232	204	Reduction

Signature: Frank Lopez (11/20/2025 14:32:48 CST)

Email: FTLopez@tarrantcountytx.gov

Previous Design

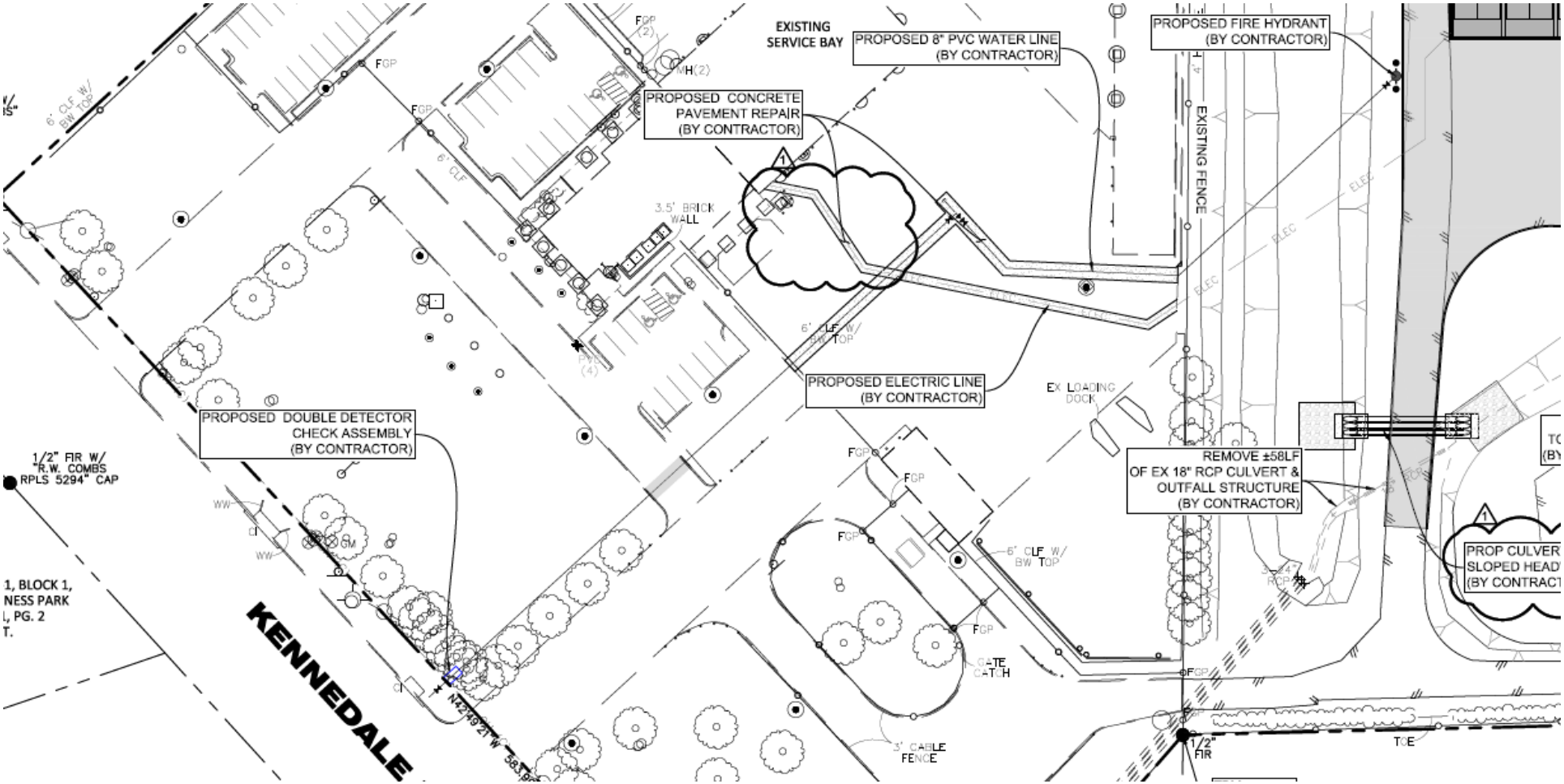

Revised Design

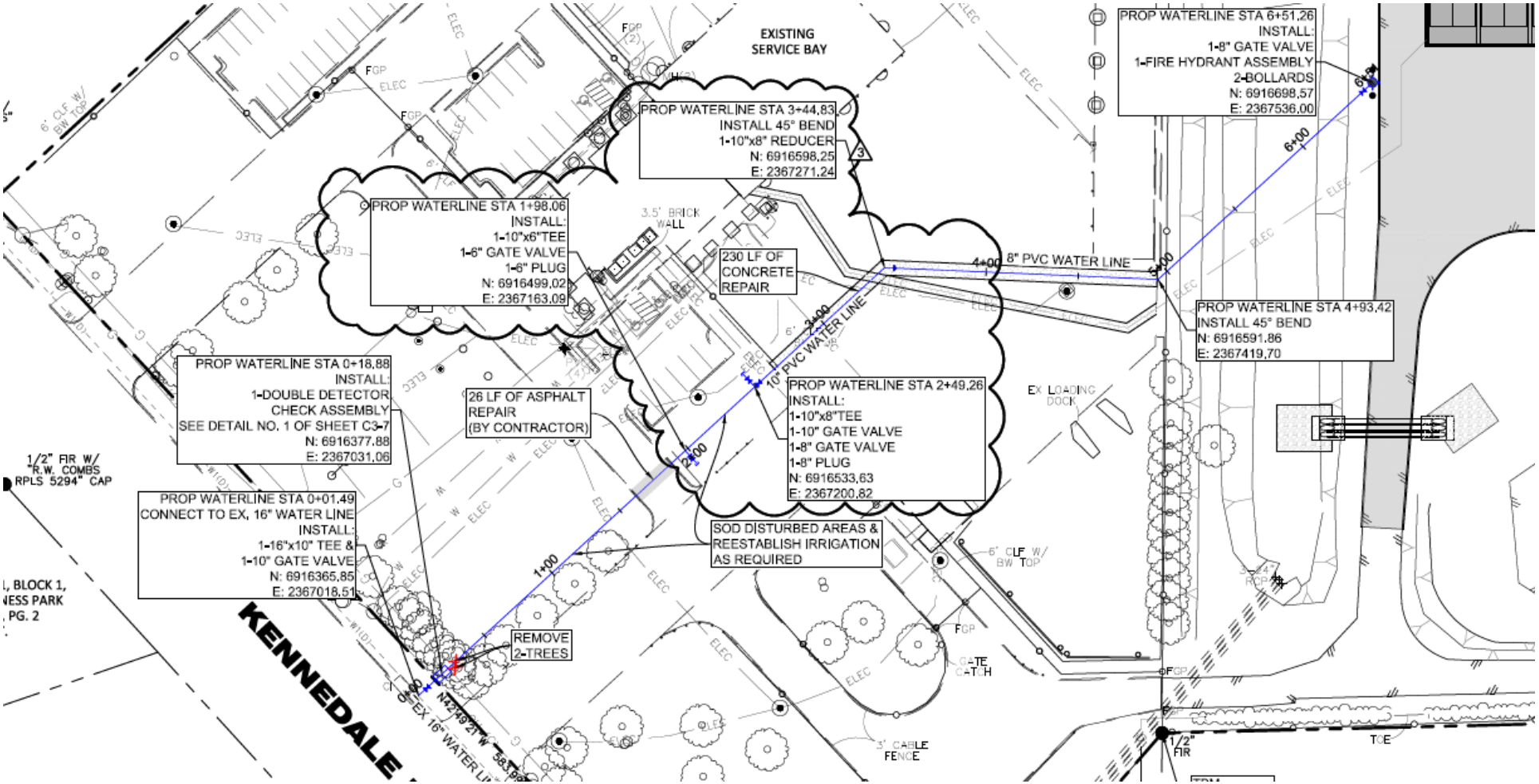

TARRANT COUNTY
COMMISSIONERS COURT COMMUNICATION

Department: Facilities Management **Prepared By:** Misty Foster **Approved By:** Frank Lopez

SUBJECT:

Consideration of a Parking License Agreement between Tarrant County and Cassata for Parking Spaces Located at 1400 Hemphill Street, Fort Worth, Texas

*****CONSENT AGENDA *****

COMMISSIONERS COURT ACTION REQUESTED

It is requested that the Commissioners Court consider approval of a Parking License Agreement between Tarrant County and CASSATA for parking spaces located at 1400 Hemphill Street, Fort Worth, Texas.

BACKGROUND

On November 23, 2021, the Commissioners Court, through Court Order #136915, approved the initial Parking License Agreement with Cassata Catholic High School and Catholic Diocese of Fort Worth ("collectively referred to as CASSATA"). The term of this agreement was from December 1, 2021, through December 31, 2022. The total amount of this contract was $19,832.00.

On December 13, 2022, the Commissioners Court, through Court Order #139930, approved a Parking License Agreement with Cassata to renew the Agreement term through December 31, 2024. The agreement was for twenty-eight (28) parking spaces, and the County paid $80.00 per parking space per month. With a yearly total of $26,880.

On December 3, 2024, the Commissioners Court, through Court Order #144367, approved a Parking License Agreement with Cassata to renew the Agreement term through December 31, 2025, for fifteen (15) parking spaces, and the County paid $80.00 per parking space per month for MHMR employees for a yearly total of $14,400.00.

This Parking License Agreement will commence on January 1, 2026, through December 31, 2026. This agreement includes fifteen (15) parking spaces for the use of MHMR employees. The County will pay Cassata, $85.00 per parking space per month for each month this agreement is in effect for a total of $15,300.00. Payment will be due on the first day of each month. Either party may terminate this agreement for any reason, provided such notice to terminate will only be effective if delivered in writing in any of the methods listed in Section 10 of this agreement, not less than thirty (30) days prior to the desired date of termination.

The District Attorney's Office has approved this lease agreement as to form.

FISCAL IMPACT

The fiscal impact is $15,300 over the term of the agreement with $10,800 in FY 2026 and $3,600 in FY 2027. Funds are available for this agreement in Fund T0450-2026 Public Health 1115 Waiver/5100011000 Public Health/531011 Rent. Funding for FY 2027 will be requested as a part of the budget process.

PASSED AND APPROVED on December 9, 2025.

COUNTY OF TARRANT
STATE OF TEXAS

By: Separate Electronic Signature Page
Tim O'Hare
County Judge

APPROVED AS TO FORM:

_____
District Attorney's Office*

*By law, the District Attorney's Office may only approve contracts for its clients. We reviewed this document as to form from our client's legal perspective. Other parties may not rely on this approval. Instead, those parties should seek contract review from independent counsel.

Attachments

Cassata Parking Agreement.pdf

Parking License Agreement

This Parking License Agreement (the "Agreement") is entered into between CASSATA CATHOLIC HIGH SCHOOL and the CATHOLIC DIOCESE OF FORT WORTH ("collectively referred to as CASSATA") and TARRANT COUNTY as of January 1, 2026.

1. Background

1.1 CASSATA owns certain real property and improvements, including a parking lot located at 1400 Hemphill Street, Fort Worth, Texas

1.2 TARRANT COUNTY seeks 15 parking spaces from January 1, 2026, through December 31, 2026.

2. Property

2.1 Cassata's property is located at 1400 Hemphill Street, Fort Worth, Texas 76104, and includes a parking lot on the south side of property.

3. License

CASSATA grants to TARRANT COUNTY permission to not less than 15 spaces from January 1, 2025, through December 31, 2025, at Cassata's property for use by TARRANT COUNTY employees, its contractors and subcontractors, twenty-four hours a day, seven days a week, each week during the term of this Agreement, in the Area shown on **Exhibit A.** TARRANT COUNTY accepts the parking area described herein in its "as is" condition. This Agreement is non-exclusive and CASSATA may use the licensed property for any purpose, so long as the use does not interfere with the rights granted to TARRANT COUNTY by this Agreement.

This license and permission does not extend to any heavy machinery or heavy construction equipment of TARRANT COUNTY's contractors or subcontractors. TARRANT COUNTY agrees that no heavy machinery or heavy construction equipment has permission to access real property owned by CASSATA, including the parking lot. TARRANT COUNTY will notify its contractors and subcontractors that no heavy machinery or heavy construction equipment is permitted to access or enter onto real property owned by CASSATA, including the parking lot.

4. Payment

Licensee will pay to Licensor $85.00 per parking space per month for each month this Agreement is in effect, for a total of Fifteen Thousand Three Hundred and 00/100 Dollars ($15,300.00) over the term of this license. Payments will be due on the first day of each month.

5. Term

This Agreement shall terminate December 31, 2026. TARRANT COUNTY may renew this Agreement for an additional one-year term by providing CASSATA with written notice of renewal no less than thirty (3) days prior to the expiration of the then-current term, provided neither party delivers written notice to terminate this Agreement prior to the expiration of the then-current term. Either party may terminate this Agreement for any reason, provided such notice to terminate will only be effective if delivered in writing in any of the methods listed in Section 11 of this Agreement, not less than 30 days prior to the desired date of termination. The Term will commence on January 1, 2025.

6. Indemnification and Insurance

TARRANT COUNTY's use of CASSATA's property will be at TARRANT COUNTY's sole risk, and TARRANT COUNTY hereby agrees, to the extent permitted by the Texas Constitution, laws, and rules, and without waiving any immunities or defenses available to TARRANT COUNTY as a governmental entity, to indemnify, defend and hold harmless CASSATA, its successors, and assigns, from and against any loss, damage, expense, liability, action, cause of action, or other liability CASSATA, its successors, and assigns may suffer or incur as a result of the use of CASSATA's property by TARRANT COUNTY or its tenants, contractors, subcontractors, and invitees for parking purposes or otherwise, unless the loss, damage, expense, liability, action, cause of action or other liability is caused by CASSATA's gross negligence or willful misconduct.

7. Maintenance

CASSATA agrees to maintain CASSATA's property. In the event excessive clean-up is required related to TARRANT COUNTY's use, TARRANT COUNTY will clean the parking area licensed by this Agreement on the same schedule and in the same manner as TARRANT COUNTY cleans its own parking areas.

8. Representation of CASSATA

CASSATA represents and warrants to TARRANT COUNTY that is has the authority to enter into this Agreement and to license the parking area to TARRANT COUNTY.

9. No barriers

CASSATA will not construct any barriers or obstacles that would unreasonably interfere with the use of the licensed property granted by this Agreement.

10. Personal Property

CASSATA assumes no responsibility for damage to or loss or theft of any personal property or equipment of TARRANT COUNTY, its tenants, employees or invitees.

11. Notices

CASSATA:

Cassata Learning Center
Attn: Maria Duran
1400 Hemphill St., Fort Worth, TX 76104

TARRANT COUNTY:

Tarrant County
Attn: Frank Lopez
200 Taylor St. Ste. 344
Fort Worth, TX 76196

Any notices delivered under this Agreement must be delivered in writing via hand-delivery or by U.S. certified mail. Notices will be deemed delivered on the date received if hand-delivered, or on the date of the recipient's signature if sent by certified mail.

12. Compliance with Laws

Throughout the term of this Agreement, CASSATA must observe and comply with all applicable federal, state, and local statutes, ordinances, rules, and regulations, including, without limitation, workers' compensation laws, minimum and maximum salary and wage statutes and regulations, and non-discrimination laws and regulations. CASSATA shall be responsible for ensuring its compliance with any laws and regulations applicable to its business, including maintaining any necessary licenses and permits.

13. Execution of Agreement

This Agreement may be executed in one or more counterparts, each of which will be deemed to be an original copy of this Agreement, and all of which, when taken together, shall be deemed to constitute one and the same agreement. The exchange of copies of this Agreement and of signature pages by electronic transmission shall constitute effective execution and delivery of this Agreement as to the parties and may be used in lieu of the original Agreement for all purposes. Signatures of the parties transmitted or executed electronically shall be deemed to be their original signatures for any purpose whatsoever.

[Remainder of Page Intentionally Left Blank]

APPROVED on this day the _____ day of _____, 2025, by Tarrant County.

Commissioners Court Order No. _____.

By: CASSATA

Signature: _____
Name: Michael F. Olson, S.T.D.
Title: Bishop

By: TARRANT COUNTY

Signature: Separate Electronic Signature Page
Name: Judge Tim O'Hare
Title: County Judge

APPROVED AS TO FORM:

_____
Criminal District Attorney's Office*

*By law, the Criminal District Attorney's Office may only approve contracts for its clients. We reviewed this document as to form from our client's legal perspective. Other parties may not rely on this approval. Instead, those parties should seek contract review from independent counsel.

CERTIFICATION OF
AVAILABLE FUNDS: $_____

_____
Tarrant County Auditor

TARRANT COUNTY
COMMISSIONERS COURT COMMUNICATION

Court Date: December 9, 2025	**Court Order #:**	**Page:** 1 of 1
Department: HIV Adminsitrative Agency	**Prepared By:** Dulce Lozano	**Approved By:** Lisa McKamie-Muttiah

SUBJECT:

Consideration of Interim Funding for Fiscal Year 2026 Health Resources and Services Administration Ryan White Part C Grant

***** CONSENT AGENDA *****

COMMISSIONERS COURT ACTION REQUESTED

It is requested that the Commissioners Court consider the FY 2026 interim funding in the amount of $17,000.00 for the Health Resources and Services Administration (HRSA) Ryan White Part C (Part C) Grant for a period not to exceed twelve (12) weeks.

BACKGROUND

Tarrant County receives annual grant funding from HRSA to provide a variety of essential core and support services for people living with HIV. HRSA Ryan White Part C grant funding is used for the provision of health care and support services in outpatient settings for people living with HIV in the Health Services Delivery Area (HSDA). HSDA includes the Fort Worth/Arlington Transitional Grant Area (TGA) which includes the counties of Tarrant, Wise, Johnson, Parker, Hood, Erath, Palo Pinto, and Somerville. Tarrant County HIV Administrative Agency (TC-HIVAA) administers the grant funding through a subcontract with CAN Community Health, Inc. (CAN) to deliver high-quality services.

The Health Resources and Services Administration has not yet announced the award for the Ryan White Part C FY2026 grant period. The program is expected to continue to receive funding.

If approved, interim funding will allow the Tarrant County HIV Administrative Agency to continue the provision of administrative services until the Notice of Award is received and fully executed by Commissioners Court.

The project period for the HRSA FY2026 Part C Grant is January 1, 2025, through December 31, 2027. The grant budget period is January 1, 2026, through December 31, 2026.

This request has been reviewed by the Auditor's Office.

FISCAL IMPACT

County funds utilized for interim funding will be reimbursed by Part C (E0027-2026) grant funds upon award and Commissioners Court's approval of the Notice of Award. The estimated cost to Tarrant County for interim funding for twelve (12) weeks is $17,000.00 in salary and fringe expenses.

Grant E0027-2026	$17,000.00 Part C
Total Funding:	$17,000.00

TARRANT COUNTY
COMMISSIONERS COURT COMMUNICATION

Court Date: December 9, 2025	**Court Order #:**	**Page:** 1 of 3
Department: HIV Adminsitrative Agency	**Prepared By:** Dulce Lozano	**Approved By:** Lisa McKamie-Muttiah

SUBJECT:

Consideration to Submit the Texas Department of State Health Services Fiscal Year 2026-2027 Ryan White Part B Services Grant Renewal Application

*****CONSENT AGENDA *****

COMMISSIONERS COURT ACTION REQUESTED

It is requested that the Commissioners Court consider the Texas Department of State Health Services (DSHS) FY 2026-2027 Ryan White Treatment Extension Act Part B HIV Services grant renewal totaling $1,219,545.00.

BACKGROUND

The Texas DSHS provides annual Ryan White Treatment Extension Act Part B grant funding to support the provision of essential health and support services to people living with HIV in the Tarrant County Health Services Delivery Area (HSDA). Tarrant County has received Part B funding from DSHS for more than 20 years.

The total amount of funding for FY 2026-2027 is $1,219,545.00. The term of this contract is April 1, 2026, through March 31, 2027.

FISCAL IMPACT

There is no fiscal impact associated with this action.

Anticipated Administrative cost: $382,527.00 (Paid by Ryan White Part B)

No match or operating subsidy is required.

No indirect costs allowed for this grant.

PASSED AND APPROVED on December 9, 2025.

COUNTY OF TARRANT
STATE OF TEXAS

By: Separate Electronic Signature Page
Tim O'Hare
County Judge

APPROVED AS TO FORM:

_____
District Attorney's Office*

*By law, the District Attorney's Office may only approve contracts for its clients. We reviewed this document as to form from our client's legal perspective. Other parties may not rely on this approval. Instead, those parties should seek contract review from independent counsel.

Attachments

FY26-27 DSHS Part B Grant Renewal Application

Department of State Health Services (DSHS)

FORM A: Face Page This form requests basic information about the applicant and project, including the signature of the authorized representative. The face page is the cover page of the renewal and shall be completed in its entirety. Signature of face page certifies to all DSHS, and program assurances listed in this renewal document.

RESPONDENT INFORMATION

1) LEGAL BUSINESS NAME: Tarrant County

2) MAILING Address Information (include mailing address, street, city, county, state and 9-digit zip code): **Check if address change** ☐
2300 Circle Drive, STE 2306, Fort Worth, TX 76119-8138

3) PAYEE Name and Mailing Address, including 9-digit zip code (if different from above): **Check if address change** ☐
Tarrant County – 100 East Weatherford Street, Fort Worth, TX 76196-0101

4) DUNS Number (9-digit) required if receiving federal funds: 068365220

5) Federal Tax ID No. (9-digit), **State of Texas Comptroller Vendor ID Number** (14-digit) or **Social Security Number** (9-digit): 75-6001170

The respondent acknowledges, understands, and agrees that the respondent's choice to use a social security number as the vendor identification number for the contract, may result in the social security number being made public via state open records requests.

6) TYPE OF ENTITY (check all that apply):

☐ City	☐ Nonprofit Organization*	☐ Individual
☒ County	☐ For Profit Organization*	☐ Federally Qualified Health Centers
☐ Other Political Subdivision	☐ HUB Certified	☐ State Controlled Institution of Higher Learning
☐ State Agency	☐ Community-Based Organization	☐ Hospital
☐ Indian Tribe	☐ Minority Organization	☐ Private
	☐ Faith Based (Nonprofit Org)	☐ Other (specify): _____

**If incorporated, provide 10-digit charter number assigned by Secretary of State:*

7) PROPOSED BUDGET PERIOD: **Start Date:** 4/1/2026 **End Date:** 03/31/2027

8) COUNTIES SERVED BY PROJECT:
Erath, Hood, Johnson, Palo Pinto, Somervell, Tarrant, and Wise

9) AMOUNT OF FUNDING REQUESTED: $1,219,545.00

10) PROJECTED EXPENDITURES

Does respondent's projected federal expenditures exceed $500,000, or its projected state expenditures exceed $500,000, for respondent's current fiscal year (excluding amount requested in line 9 above)? **

Yes ☒ No ☐

***Projected expenditures should include anticipated expenditures under all federal grants including "pass through" federal funds from all state agencies, or all anticipated expenditures under state grants, as applicable.*

11) PROJECT CONTACT PERSON

Name: Lisa McKamie- Muttiah
Phone: 817-370-4527
Fax: 817-531-6770
Email: lmuttiah@tarrantcountytx.gov

12) FINANCIAL OFFICER

Name: Kimberly M. Buchanan
Phone: 817-884-1011
Fax: 817-884-1104
Email: kmbuchanan@tarrantcountytx.gov

The facts affirmed by me in this proposal are truthful and I warrant the respondent is following the assurances and certifications contained in **APPENDIX B: DSHS Assurances and Certifications**. I understand the truthfulness of the facts affirmed herein and continuing compliance with these requirements are conditions precedent to the award of a contract. This document has been duly authorized by the governing body of the respondent and I (the person signing below) am authorized to represent the respondent.

13) AUTHORIZED REPRESENTATIVE **Check if change** ☐

Name: Tim O'Hare
Title: County Judge
Phone: 817-884-1441
Fax: 817-884-1104
Email: countyjudgegrants@tarrantcountytx.gov

14) SIGNATURE OF AUTHORIZED REPRESENTATIVE
Separate Electronic Signature Page

15) DATE
December 16, 2025

FORM B: CONTACT PERSON INFORMATION

Legal Name of Applicant: Tarrant County

*This form provides information about the appropriate program contacts in the applicant's organization. If any of the following information changes during the term of the contract, please notify the **Contract Manager and the HIV Care Services Group.***

Director:	Lisa McKamie-Muttiah		**Mailing Address (incl. street, city, county, state, & zip):**
Title:	HIV Administrative Agency Manager		2300 Circle Drive, STE 2306
Phone:	817-370-4527	Ext.	Fort Worth, TX 76119
Fax:	817-531-6770		
E-mail:	lmuttiah@tarrantcountytx.gov		
Project Contact:	Lisa McKamie-Muttiah		**Mailing Address (incl. street, city, county, state, & zip):**
Title:	HIV Administrative Agency Manager		2300 Circle Drive, STE 2306
Phone:	817-370-4527	Ext.	Fort Worth, TX 76119
Fax:	817-531-6770		
E-mail:	lmuttiah@tarrantcountytx.gov		
Financial Reporting Contact:	Kimberly Buchanan		**Mailing Address (incl. street, city, county, state, & zip):**
Title:	County Auditor		100 East Weatherford Street
Phone:	817-884-1011	Ext.	Fort Worth, TX 76196
Fax:	817-884-1104		
E-mail:	kmbuchanan@tarrantcountytx.gov		
Data Reporting Contact:	S. Renee Thomas		**Mailing Address (incl. street, city, county, state, & zip):**
Title:	HIV Grants and Data Coordinator		2300 Circle Drive, STE 2306
Phone:	817-370-4528	Ext.	Fort Worth, TX 76119
Fax:	817-531-6770		
E-mail:	srthomas@tarrantcountytx.gov		
Clinical Services Contact:	Kaitlin Lopez		**Mailing Address (incl. street, city, county, state, & zip):**
Title:	Grants Coordinator, Quality & Planning		2300 Circle Drive, STE 2306
Phone:	817-370-4526	Ext.	Fort Worth, TX 76119
Fax:	817-531-6770		
E-mail:	kmlopez@tarrantcountytx.gov		
Board Chairperson:			**Mailing Address (incl. street, city, county, state, & zip):**
Title:			
Phone:		Ext.	
Fax:			
E-mail:			
Emergency Contact:	Barbara Kakembo		**Mailing Address (incl. street, city, county, state, & zip):**
Title:	Financial Coordinator		2300 Circle Drive, STE 2306
Phone:	817-3740-4529	Ext.	Fort Worth, TX 76119
Fax:	817-531-6770		
E-mail:	bakakembo@tarrantcountytx.org		

TARRANT COUNTY
COMMISSIONERS COURT COMMUNICATION

Court Date: December 9, 2025	**Court Order #:**	**Page:** 1 of 4
Department: HIV Adminsitrative Agency	**Prepared By:** Dulce Lozano	**Approved By:** Lisa McKamie-Muttiah

SUBJECT:

Consideration of Amendment No. 2 to the Fiscal Year 2025-2026 Health Resources and Services Administration Ryan White Treatment Extension Act Part A Provider Contract with Harvesting International Ministry Center, Inc.

*****CONSENT AGENDA *****

COMMISSIONERS COURT ACTION REQUESTED

It is requested that the Commissioners Court consider Amendment No. 2 to the Fiscal Year 2025-2026 Health Resources and Services Administration (HRSA) Ryan White Treatment Extension Act Part A (Part A) provider contract with Harvesting International Ministry Center, Inc. (HIM).

BACKGROUND

Tarrant County has been awarded funding since 1996 under the Ryan White HIV/AIDS Program (RWHAP) Part A HIV Emergency Relief Grant Program. The purpose of this program is to provide direct financial assistance to the Fort Worth/Arlington Transitional Grant Area (TGA), which is severely affected by the HIV epidemic. The RWHAP allows the TGA to develop and enhance access to a comprehensive continuum of high-quality, community-based care for people with HIV who are low-income through the provision of formula, supplemental, and Minority AIDS Initiative (MAI) funds. The goal is to provide optimal HIV care and treatment for people with HIV who are low-income, uninsured, and underserved, to improve their medical outcomes. Tarrant County HIV Administrative Agency administers the grant funding and subcontracts with community organizations to deliver high-quality services.

For over two decades, HIM has partnered with local organizations to distribute healthy food and provide educational initiatives aimed at fostering self-sufficiency among underserved populations. This contract will support food bank services for people living with HIV.

On February 04, 2025, the Commissioners Court, through Court Order #144705, approved the FY 2025-2026 Ryan White Part A Notice of Award (NOA) for partial funding in the amount of $1,002,747.00.

On April 02, 2025, the Commissioners Court, through Court Order #144953, approved the FY 2025-2026 provider contract with HIM not to exceed $13,072.00.

On June 03, 2025, the Commissioners Court, through Court Order #145341, approved Amendment No. 1 to the FY 2025-2026 Ryan White Part A NOA in the amount of $1,475,003.00, increasing funding to $2,477,750.00.

On August 5, 2025, the Commissioners Court, through Court Order #145602, approved Amendment. No. 1 to the FY 2025-2026 provider contract with HIM to increase funding by $19,226.00, for a total of $32,298.00.

With approval of Amendment No. 2 to the provider contract, funding will decrease in the Food Bank service category by $19,599.00, for a total of $12,699.00.

The Part A project period is March 1, 2025, through February 29, 2028. The term of this contract period is March 1, 2025, through February 28, 2026.

The recommended contract is as follows:

HIM – Total reimbursement shall not exceed $12,699.00

The Criminal District Attorney's Office has reviewed these documents as to form.

FISCAL IMPACT

All associated costs will be paid from grant allocations as follows:

Part A Funding: Grant-2004 E0028-2026 Health Resources and Services Administration (HRSA) Ryan White Treatment Extension Act Part A (Part A) /1132200000 HIV Subrecipients /569011 Professional Services – net impact: ($19,599.00)

PASSED AND APPROVED on December 9, 2025.

COUNTY OF TARRANT
STATE OF TEXAS

By: Separate Electronic Signature Page
Tim O'Hare
County Judge

APPROVED AS TO FORM:

_____
District Attorney's Office*

*By law, the District Attorney's Office may only approve contracts for its clients. We reviewed this document as to form from our client's legal perspective. Other parties may not rely on this approval. Instead, those parties should seek contract review from independent counsel.

Attachments

Part A FY25-26 Amendment No. 2 (HIM)

Amendment No. 2
RYAN WHITE PART A, Harvesting International Ministry Center, Inc., HRSA No. 5 H89HA00047-30-02
March 1, 2025, through February 28, 2026

1. Scope of Services

Harvesting International Ministry Center, Inc. accepts this Amendment and will revise the Work Plan to fulfill the Amendment's goals. Total funding, including this Amendment is $12,699.00. The following contract amount changed:

Decrease Part A $19,599.00 Food Bank/Home Delivered Meal services for a total of a total of $12,699.00

PART A FY 25-26 (03/01/25-02/28/26)	CURRENT BUDGET			REVISED BUDGET		
Service Categories	**$ Amount**	**# Clients**	**# Units**	**$ Amount**	**# Clients**	**# Units**
Food Bank	$ 32,298.00	54	1,075	$ 12,699.00	53	367

2. Special Provisions

PART A FY 25-26 (03/01/25-02/28/26)		
Budget Line Item	**Current Budget**	**Revised Budget**
Personnel	$ -	$ -
Fringe	$ -	$ -
Travel	$ -	$ -
Equipment	$ -	$ -
Supplies	$ -	$ -
Contractual	$ -	$ -
Other	$ 32,298.00	$ 12,699.00
Total Part A FY 25-26 Budget	$ 32,298.00	$ 12,699.00

Total Reimbursements will not exceed $12,699.00, of which ten percent (10%) may be used for administrative costs.

3. Cost

The COUNTY will pay up to $12,699.00 pursuant to this contract. COUNTY will pay within thirty (30) days of invoice receipt when the PROVIDER satisfies the following conditions:

3.1 PROVIDER will bill for services performed under this contract;
3.2 PROVIDER will bill at the rate of $25.00 per one unit; one visit to food bank equals one unit of service;
3.3 PROVIDER will bill at the rate of $25.00 per food bank delivery service;

3. Contract Execution

Execution of Agreement. This agreement may be executed in one or more counterparts, each of which will be deemed to be an original copy of this agreement, and all of which, when taken together, shall be deemed to constitute one and the same agreement. The exchange of copies of this agreement and of signature pages by electronic transmission shall constitute effective execution and delivery of this agreement as to the parties and may be used in lieu of the original agreement for all purposes. Signatures of the parties transmitted or executed electronically shall be deemed to be their original signatures for any purpose whatsoever.

Harvesting International Ministry Center, Inc.
150 S. 6th Avenue
Mansfield, Texas 76063
ATTN: Lisa Richardson

By: Lisa Richardson (11/21/2025 14:51:54 CST)

Title: _____

Date: _____

TARRANT COUNTY
COMMISSIONERS COURT COMMUNICATION

Court Date: December 9, 2025	**Court Order #:**	**Page:** 1 of 4
Department: HIV Adminsitrative Agency	**Prepared By:** Dulce Lozano	**Approved By:** Lisa McKamie-Muttiah

SUBJECT:

Consideration of Amendment No. 3 to the Fiscal Year 2025-2026 Health Resources and Services Administration Ryan White Treatment Extension Act Part A Subrecipient Contract with The Salvation Army

*****CONSENT AGENDA *****

COMMISSIONERS COURT ACTION REQUESTED

It is requested that the Commissioners Court consider Amendment No. 3 to the Fiscal Year 2025-2026 Health Resources and Services Administration (HRSA) Ryan White Treatment Extension Act Part A (Part A) subrecipient contract with The Salvation Army (SAFW).

BACKGROUND

Tarrant County has been awarded funding since 1996 under the Ryan White HIV/AIDS Program (RWHAP) Part A HIV Emergency Relief Grant Program. The purpose of this program is to provide direct financial assistance to the Fort Worth/Arlington Transitional Grant Area (TGA), which is severely affected by the HIV epidemic. The RWHAP allows the TGA to develop and enhance access to a comprehensive continuum of high-quality, community-based care for people with HIV who are low-income through the provision of formula, supplemental, and Minority AIDS Initiative (MAI) funds. The goal is to provide optimal HIV care and treatment for people with HIV who are low-income, uninsured, and underserved, to improve their medical outcomes. Tarrant County HIV Administrative Agency (TC-HIVAA) administers the grant funding and subcontracts with community organizations to deliver high-quality services.

SAFW has been a Tarrant County subrecipient for more than twenty (20) years and is a community-based organization that delivers a variety of services to people living with HIV in Tarrant County and surrounding areas. Services include emergency financial assistance, housing, and food assistance.

On February 04, 2025, the Commissioners Court, through Court Order #144705, approved the FY 2025-2026 Ryan White Part A Notice of Award (NOA) for partial funding in the amount of $1,002,747.00.

On May 20, 2025, the Commissioners Court, through Court Order #145242, approved the FY 2025-2026 subrecipient contract with SAFW in the amount of $62,962.00.

On June 03, 2025, the Commissioners Court, through Court Order #145341, approved Amendment No. 1 to the FY 2025-2026 Ryan White Part A NOA in the amount of $1,475,003.00, for a total of $2,477,750.00.

On July 01, 2025, the Commissioners Court, through Court Order #145451, approved Amendment No. 1 to the FY 2025-2026 subrecipient contract with SAFW in the amount of $92,605.00, for a total of $155,567.00.

On August 19, 2025, the Commissioners Court, through Court Order #145733, approved Amendment No. 2 to the FY 2025-2026 Ryan White Part A NOA in the amount of $3,069,828.00 for a total of $5,547,578.00.

On September 03, 2025, the Commissioners Court, through Court Order #145824, approved Amendment No. 3 to the FY 2025-2025 Ryan White Part A NOA in the amount of $341,216.00 for a total of $5,888,794.00.

On October 14, 2025, the Commissioners Court, through Court Order #146087, approved Amendment No. 2 to the FY 2025-2026 subrecipient contract with SAFW in the amount of $191,714.00, for a total of $347,281.00.

With approval of Amendment No. 3 to the subrecipient contract, funding will increase by $39,803.00 for a total of $387,084.00.

The Part A project period is March 1, 2025, through February 29, 2028. The term of the contract period is March 1, 2025, through February 28, 2026.

The recommended contracts are as follows:

SAFW – Total reimbursement shall not exceed $387,084.00

The Criminal District Attorney's Office has reviewed these documents as to form

FISCAL IMPACT

All associated costs will be paid from grant allocations as follows:

Part A Funding: Grant-2004 E0028-2026 Health Resources and Services Administration (HRSA) Ryan White Treatment Extension Act Part A (Part A) /1132200000 HIV Subrecipients /569013 Subrecipient Services – net impact: $39,803.00

PASSED AND APPROVED on December 9, 2025.

COUNTY OF TARRANT
STATE OF TEXAS

By: Separate Electronic Signature Page
Tim O'Hare
County Judge

APPROVED AS TO FORM:

_____

District Attorney's Office*

*By law, the District Attorney's Office may only approve contracts for its clients. We reviewed this document as to form from our client's legal perspective. Other parties may not rely on this approval. Instead, those parties should seek contract review from independent counsel.

Attachments

Part A FY25-26 (SAFW) Amendment No. 3

Amendment No. 3 to Attachment No. A1-2025002
RYAN WHITE PART A, The Salvation Army, HRSA No. 6 H89HA00047-30-02
March 1, 2025, through February 28, 2026

1. Scope of Work

The Salvation Army accepts this Amendment and will revise the Work Plan and Agreement to fulfill the Amendment's goals. Total funding, including this Amendment, is $387,084.00. The following service categories will change:

Increase	$19,803.00	Part A	Emergency Financial Assistance - Other for a total of $22,548.00
Increase	$20,000.00	Part A	Housing Services for a total of $353,655.00

PART A FY 25-26 (03/01/25-02/28/26)	CURRENT BUDGET			REVISED BUDGET		
Service Categories	**$ Amount**	**# Clients**	**# Units**	**$ Amount**	**# Clients**	**# Units**
Emergency Financial Assistance	$ 2,228.00	6	9	$ 2,228.00	6	9
Emergency Financial Assistance - Other	$ 2,745.00	9	13	$ 22,548.00	19	33
Food Bank	$ 8,653.00	75	160	$ 8,653.00	75	160
Housing Services	$ 333,655.00	82	200	$ 353,655.00	88	212

2. Special Provisions

PART A FY 25-26 (03/01/25-02/28/26)		
Budget Line Item	**Current Budget**	**Revised Budget**
Personnel	$ 51,996.00	$ 51,996.00
Fringe	$ 16,078.00	$ 16,078.00
Travel	$ -	$ -
Equipment	$ -	$ -
Supplies	$ 8,653.00	$ 8,653.00
Contractual	$ -	$ -
Other	$ 270,554.00	$ 310,357.00
Total Part A FY 25-26 Budget	$ 347,281.00	$ 387,084.00

Total Reimbursements will not exceed $387,084.00, of which ten percent (10%) may be used for administrative costs.

3. Contract Execution

Execution of Agreement. This agreement may be executed in one or more counterparts, each of which will be deemed to be an original copy of this agreement, and all of which, when taken together, shall be deemed to constitute one and the same agreement. The exchange of copies of this agreement and of signature pages by electronic transmission shall constitute effective execution and delivery of this agreement as to the parties and may be used in lieu of the original agreement for all purposes. Signatures of the parties transmitted or executed electronically shall be deemed to be their original signatures for any purpose whatsoever.

THE SALVATION ARMY
P.O. Box 2333
Fort Worth, TX 76113
Attn: Grants

By: 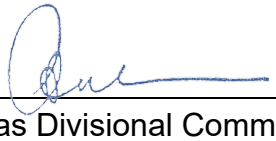

Title: Texas Divisional Commander

Date: 10/23/2025

Remainder of the page intentionally left blank

TARRANT COUNTY
COMMISSIONERS COURT COMMUNICATION

Court Date: December 9, 2025	**Court Order #:**	**Page:** 1 of 4
Department: HIV Adminsitrative Agency	**Prepared By:** Dulce Lozano	**Approved By:** Lisa McKamie-Muttiah

SUBJECT:

Consideration of Amendment No. 3 to Fiscal Year 2025-2026 Health Resources and Services Administration Ryan White Treatment Extension Act Part A Subrecipient Contract with Tarrant County Public Health – Preventive Medicine Clinic

*****CONSENT AGENDA *****

COMMISSIONERS COURT ACTION REQUESTED

It is requested that the Commissioners Court consider Amendment No. 3 to Fiscal Year 2025-2026 Health Resources and Services Administration (HRSA) Ryan White Treatment Extension Act Part A (Part A) subrecipient contract with Tarrant County Public Health – Preventive Medicine Clinic (PMC).

BACKGROUND

Tarrant County has been awarded funding since 1996 under the Ryan White HIV/AIDS Program (RWHAP) Part A HIV Emergency Relief Grant Program. The purpose of this program is to provide direct financial assistance to the Fort Worth/Arlington Transitional Grant Area (TGA), which is severely affected by the HIV epidemic. The RWHAP allows the TGA to develop and enhance access to a comprehensive continuum of high-quality, community-based care for people with HIV who are low-income through the provision of formula, supplemental, and Minority AIDS Initiative (MAI) funds. The goal is to provide optimal HIV care and treatment for people with HIV who are low-income, uninsured, and underserved, to improve their medical outcomes. Tarrant County HIV Administrative Agency (TC-HIVAA) administers the grant funding and subcontracts with community organizations to deliver high-quality services.

PMC has been delivering HIV services for more than twenty-five (25) years and is an HIV medical clinic that is part of Tarrant County Public Health (TCPH). PMC delivers a variety of services to people living with HIV in Tarrant County and surrounding areas. Services include medical care, prescription assistance, and medical case management.

On February 04, 2025, the Commissioners Court, through Court Order #144705, approved the FY 2025-2026 Ryan White Part A Notice of Award (NOA) for partial funding in the amount of $1,002,747.00.

On April 15, 2025, the Commissioners Court, through Court Order #145062, approved the FY 2025-2026 subrecipient contract with PMC in the amount of $103,109.00.

On June 03, 2025, the Commissioners Court, through Court Order #145341, approved Amendment No. 1 to the FY 2025-2026 Ryan White Part A NOA in the amount of $1,475,003.00, increasing funding to $2,477,750.00.

On July 01, 2025, the Commissioners Court, through Court Order #145451, approved Amendment No. 1 to the FY 2025-2026 subrecipient contract with PMC in the amount of $151,656.00, for a total of $254,765.00.

On August 19, 2025, the Commissioners Court, through Court Order #145733, approved Amendment No. 2 to the FY 2025-2026 Ryan White Part A NOA in the amount of $3,069,828.00 for a total of $5,547,578.00.

On September 03, 2025, the Commissioners Court, through Court Order #145824, approved Amendment No. 3 to the FY 2025-2025 Ryan White Part A NOA in the amount of $341,216.00 for a total of $5,888,794.00.

On October 14, 2025, the Commissioners Court, through Court Order #146087, approved Amendment No. 2 to the FY 2025-2026 subrecipient contract with PMC in the amount of $313,966.00, for a total of $568,731.00.

With approval of Amendment No. 3 to the subrecipient contract with PMC, funding will decrease by $34,500.00, for a total of $534,231.00.

The Part A project period is March 1, 2025, through February 29, 2028. The term of the contract period is March 1, 2025, through February 28, 2026.

The recommended contract is as follows:

PMC – Total reimbursement shall not exceed $534,231.00

The Criminal District Attorney's Office has reviewed these documents as to form

FISCAL IMPACT

All associated costs will be paid from grant allocations as follows:

Part A Funding: Grant-2004 E0028-2026 Health Resources and Services Administration (HRSA) Ryan White Treatment Extension Act Part A (Part A) /1132200000 HIV Subrecipients /569013 Subrecipient Services – net impact: ($34,500.00)

PASSED AND APPROVED on December 9, 2025.

COUNTY OF TARRANT
STATE OF TEXAS

By: Separate Electronic Signature Page
Tim O'Hare
County Judge

APPROVED AS TO FORM:

_____

District Attorney's Office*

*By law, the District Attorney's Office may only approve contracts for its clients. We reviewed this document as to form from our client's legal perspective. Other parties may not rely on this approval. Instead, those parties should seek contract review from independent counsel.

Attachments

Part A FY25-26 Amendment No. 3 (PMC)

Amendment No. 3 to Attachment No. A1-2025004
RYAN WHITE PART A, Tarrant County Public Health - Preventive Medicine Clinic, HRSA No. 5 H89HA00047-30-02
March 1, 2025, through February 28, 2026

1. Scope of Work

Tarrant County Public Health - Preventive Medicine Clinic accepts this Amendment and will revise the Work Plan and Agreement to fulfill the Amendment's goals. Total funding, including this Amendment, is $534,231.00. The following service categories change:

Decrease	<$5,000.00>	Part A	AIDS Pharmaceutical Assistance (LPAP) for a total of $15,608.00
Decrease	<$17,500.00>	Part A	Early Intervention Services for a total of $69,461.00
Decrease	<$6,000.00>	Part A	Medical Case Management for a total of $144,131.00
Decrease	<$6,000.00>	Part A	Mental Health Services for a total of $9,713.00

PART A FY 25-26 (03/01/25-02/28/26)	CURRENT BUDGET			REVISED BUDGET		
Service Categories	**$ Amount**	**# Clients**	**# Units**	**$ Amount**	**# Clients**	**# Units**
AIDS Pharmaceutical Assistance (LPAP)	$ 20,608.00	143	935	$ 15,608.00	120	704
Early Intervention Services	$ 86,961.00	95	1,188	$ 69,461.00	72	892
Emergency Financial Assistance	$ 16,159.00	16	19	$ 16,159.00	16	19
Medical Case Management	$ 150,131.00	177	3,438	$ 144,131.00	150	2,000
Mental Health Services	$ 15,713.00	24	119	$ 9,713.00	12	45
Outpatient/Ambulatory Health Services	$ 279,159.00	285	10,162	$ 279,159.00	300	2,800

2. Special Provisions

PART A FY 25-26 (03/01/25-02/28/26)		
Budget Line Item	**Current Budget**	**Revised Budget**
Personnel	$ 253,279.81	$ 241,104.45
Fringe	$ 84,309.20	$ 84,130.63
Travel	$ 1,134.00	$ 588.00
Equipment	$ -	$ -
Supplies	$ 68,150.07	$ 58,918.33
Contractual	$ 97,410.74	$ 80,357.92
Other	$ 64,447.18	$ 69,131.67
Total Part A FY 25-26 Budget	$ 568,731.00	$ 534,231.00

Total reimbursement will not exceed $534,231.00, of which ten percent (10%) may be used for administrative costs.

3. Contract Execution

Execution of Agreement. This agreement may be executed in one or more counterparts, each of which will be deemed to be an original copy of this agreement, and all of which, when taken together, shall be deemed to constitute one and the same agreement. The exchange of copies of this agreement and of signature pages by electronic transmission shall constitute effective execution and delivery of this agreement as to the parties and may be used in lieu of the original agreement for all purposes. Signatures of the parties transmitted or executed electronically shall be deemed to be their original signatures for any purpose whatsoever.

TARRANT COUNTY PREVENTIVE MEDICINE CLINIC
1101 S. Main Street, Suite 1500B
Fort Worth, TX 76104
Attn: Tarrant County Public Health Director

TARRANT COUNTY
COMMISSIONERS COURT COMMUNICATION

Court Date: December 9, 2025	**Court Order #:**	**Page:** 1 of 4
Department: HIV Adminsitrative Agency	**Prepared By:** Dulce Lozano	**Approved By:** Lisa McKamie-Muttiah

SUBJECT:

Consideration of Amendment No. 3 to the Fiscal Year 2025-2026 Health Resources and Services Administration Ryan White Treatment Extension Act Part A Subrecipient Contract with AIDS Healthcare Foundation

*****CONSENT AGENDA *****

COMMISSIONERS COURT ACTION REQUESTED

It is requested that the Commissioners Court consider Amendment No. 3 to the Fiscal Year 2025-2026 Health Resources and Services Administration (HRSA) Ryan White Treatment Extension Act Part A (Part A) subrecipient contracts with AIDS Healthcare Foundation (AHF).

BACKGROUND

Tarrant County has been awarded funding since 1996 under the Ryan White HIV/AIDS Program (RWHAP) Part A HIV Emergency Relief Grant Program. The purpose of this program is to provide direct financial assistance to the Fort Worth/Arlington Transitional Grant Area (TGA), which is severely affected by the HIV epidemic. The RWHAP allows the TGA to develop and enhance access to a comprehensive continuum of high-quality, community-based care for people with HIV who are low-income through the provision of formula, supplemental, and Minority AIDS Initiative (MAI) funds. The goal is to provide optimal HIV care and treatment for people with HIV who are low-income, uninsured, and underserved, to improve their medical outcomes. Tarrant County HIV Administrative Agency (TC-HIVAA) administers the grant funding and subcontracts with community organizations to deliver high-quality services.

AHF is a community-based medical clinic that has been delivering HIV core medical and support services for people living with HIV for ten (10) years in Tarrant County and surrounding areas. Services include medical care, prescription assistance, and other support services.

On February 04, 2025, the Commissioners Court, through Court Order #144705, approved the FY 2025-2026 Ryan White Part A Notice of Award (NOA) for partial funding in the amount of $1,002,747.00.

On May 20, 2025, the Commissioners Court, through Court Order #145243, approved the FY 2025-2026 subrecipient contract with AHF in the amount of $206,813.00.

On June 03, 2025, the Commissioners Court, through Court Order #145341, approved Amendment No. 1 to the FY 2025-2026 Ryan White Part A NOA in the amount of $1,475,003.00, increasing funding to $2,477,750.00.

On July 01, 2025, the Commissioners Court, through Court Order #145451, approved Amendment No. 1 to the FY 2025-2026 subrecipient contract with AHF in the amount of $304,222.00, for a total of $511,035.00.

On August 19, 2025, the Commissioners Court, through Court Order #145733, approved Amendment No. 2 to the FY 2025-2026 Ryan White Part A NOA in the amount of $3,069,828.00 for a total of $5,547,578.00.

On September 03, 2025, the Commissioners Court, through Court Order #145824, approved Amendment No. 3 to the FY 2025-2025 Ryan White Part A NOA in the amount of $341,216.00 for a total of $5,888,794.00.

On October 14, 2025, the Commissioners Court, through Court Order #146087, approved Amendment No. 2 to the FY 2025-2026 subrecipient contract with AHF in the amount of $740,229.00, for a total of $1,251,264.00.

With approval of Amendment No. 3 to the subrecipient contract, funding will decrease by $26,260.00, for a total of $1,225,004.00.

The Part A project period is March 1, 2025, through February 29, 2028. The term of the contract period is March 1, 2025, through February 28, 2026.

The recommended contract is as follows:

AHF – Total reimbursement shall not exceed $1,225,004.00

The Criminal District Attorney's Office has reviewed these documents as to form.

FISCAL IMPACT

All associated costs will be paid from grant allocations as follows:

Part A Funding: Grant-2004 E0028-2026 Health Resources and Services Administration (HRSA) Ryan White Treatment Extension Act Part A (Part A) /1132200000 HIV Subrecipients /569013 Subrecipient Services – net impact: ($26,260.00)

PASSED AND APPROVED on December 9, 2025.

COUNTY OF TARRANT
STATE OF TEXAS

By: Separate Electronic Signature Page
Tim O'Hare
County Judge

APPROVED AS TO FORM:

_____

District Attorney's Office*

*By law, the District Attorney's Office may only approve contracts for its clients. We reviewed this document as to form from our client's legal perspective. Other parties may not rely on this approval. Instead, those parties should seek contract review from independent counsel.

Attachments

Part A & MAI FY25-26 Contract (Partially-Executed).pdf

Amendment No. 3 to Attachment No. A1-2025005 (the "Agreement")
RYAN WHITE PART A, AIDS Healthcare Foundation, HRSA No. 6 H89HA00047-30-02
March 1, 2025, through February 28, 2026

1. Scope of Work

AIDS Healthcare Foundation accepts this Amendment and will revise the Work Plan and Agreement to fulfill the Amendment's goals. Total funding, including this Amendment, is $1,225,004.00. The following service categories change:

Decrease	<$14,859.00>	Part A	Medical Nutrition Therapy for a total of $37,417.00
Decrease	<$15,000.00>	Part A	Mental Health Services for a total of $26,903.00
Increase	$19,599.00	Part A	Outpatient/Ambulatory Health Services for a total of $495,812.00
Decrease	<$16,000.00>	Part A	Psychosocial Support Services for a total of $4,766.00

PART A FY 25-26 (03/01/25-02/28/26)	CURRENT BUDGET			REVISED BUDGET		
Service Categories	**$ Amount**	**# Clients**	**# Units**	**$ Amount**	**# Clients**	**# Units**
AIDS Pharmaceutical Assistance (LPAP/CPAP)	$ 41,212.00	618	6,460	$ 41,212.00	618	6,460
Early Intervention Services	$ 86,961.00	150	795	$ 86,961.00	75	150
Emergency Financial Assistance - RX	$ 32,777.00	-	-	$ 32,777.00	25	30
Emergency Financial Assistance - Other	$ 7,000.00	17	17	$ 7,000.00	8	8
Food Bank	$ 100,941.00	350	1,660	$ 100,941.00	450	2,750
Medical Case Management	$ 77,845.00	100	1,950	$ 77,845.00	125	1,950
Medical Nutrition Therapy	$ 52,276.00	100	245	$ 37,417.00	45	250
Mental Health Services	$ 41,903.00	40	212	$ 26,903.00	30	200
Non-medical Case Management Services	$ 73,038.00	103	1,386	$ 73,038.00	103	750
Outpatient/Ambulatory Health Services	$ 476,213.00	830	28,500	$ 495,812.00	830	41,359
Psychosocial Support Services	$ 20,766.00	150	800	$ 4,766.00	20	180

PART A MAI FY 25-26 (03/01/25-02/28/26)	CURRENT BUDGET			REVISED BUDGET		
Service Categories	**$ Amount**	**# Clients**	**# Units**	**$ Amount**	**# Clients**	**# Units**
Outpatient/Ambulatory Health Services	$ 134,742.00	225	2,695	$ 134,742.00	225	2,695

PART A MAI CYO FY 25-26 (03/01/25-02/28/26)	CURRENT BUDGET			REVISED BUDGET		
Service Categories	**$ Amount**	**# Clients**	**# Units**	**$ Amount**	**# Clients**	**# Units**
Medical Case Management	$ 68,000.00	75	1,400	$ 68,000.00	75	1,400
Medical Transportation	$ 10,000.00	50	300	$ 10,000.00	50	300
Outpatient/Ambulatory Health Services	$ 27,589.00	75	1,104	$ 27,589.00	75	1,104

2. Special Provisions

PART A FY 25-26 (03/01/25-02/28/26)

Budget Line Item	Current Budget	Revised Budget
Personnel	$ 468,488.72	$ 432,496.85
Fringe	$ 94,148.24	$ 85,096.76
Travel	$ -	$ -
Equipment	$ -	$ -
Supplies	$ 124,027.87	$ 124,027.87
Contractual	$ 255,681.00	$ 291,267.75
Other	$ 68,586.17	$ 51,782.77
Total Part A FY 25-26 Budget	$ 1,010,932.00	$ 984,672.00

PART A MAI FY 25-26 (03/01/25-02/28/26)

Budget Line Item	Current Budget	Revised Budget
Personnel	$ 60,246.53	$ 60,246.53
Fringe	$ 12,049.31	$ 12,049.31
Travel	$ -	$ -
Equipment	$ -	$ -
Supplies	$ -	$ -
Contractual	$ 44,365.49	$ 44,365.49
Other	$ 18,080.67	$ 18,080.67
Total Part A MAI FY 25-26 Budget	$ 134,742.00	$ 134,742.00

PART A MAI CYO FY 25-26 (03/01/25-02/28/26)

Budget Line Item	Current Budget	Revised Budget
Personnel	$ 54,524.33	$ 49,846.91
Fringe	$ 10,904.87	$ 9,969.39
Travel	$ -	$ -
Equipment	$ -	$ -
Supplies	$ -	$ 5,194.20
Contractual	$ 16,285.81	$ 16,285.81
Other	$ 23,874.99	$ 24,293.69
Total Part A MAI CYO FY 25-26 Budget	$ 105,590.00	$ 105,590.00
Total Part A, MAI & MAI CYO 25-26 Budget	$ 1,251,264.00	$ 1,225,004.00

Total reimbursements will not exceed $1,225,004.00, of which ten percent (10%) may be used for administrative costs.

3. Contract Execution

Execution of Agreement. This agreement may be executed in one or more counterparts, each of which will be deemed to be an original copy of this agreement, and all of which, when taken together, shall be deemed to constitute one and the same agreement. The exchange of copies of this agreement and of signature pages by electronic transmission shall constitute effective execution and delivery of this agreement as to the parties and may be used in lieu of the original agreement for all purposes. Signatures of the parties transmitted or executed electronically shall be deemed to be their original signatures for any purpose whatsoever.

AIDS HEALTHCARE FOUNDATION
6255 West Sunset Blvd. 21st Floor
Los Angeles, CA 90028
Attn: Michael Weinstein

By: Signed by: Michael Weinstein CCE9C1935856443...

Title: President

Date: 12/1/2025

TARRANT COUNTY
COMMISSIONERS COURT COMMUNICATION

Court Date: December 9, 2025	**Court Order #:**	**Page:** 1 of 5
Department: HIV Adminsitrative Agency	**Prepared By:** Dulce Lozano	**Approved By:** Lisa McKamie-Muttiah

SUBJECT:

Consideration of Amendment No. 3 to the Fiscal Year 2025-2026 Health Resources and Services Administration Ryan White Treatment Extension Act Part A Subrecipient Contract with Tarrant County Hospital District

*****CONSENT AGENDA *****

COMMISSIONERS COURT ACTION REQUESTED

is requested that the Commissioners Court consider Amendment No. 3 to the Fiscal Year 2025-2026 Health Resources and Services Administration (HRSA) Ryan White Treatment Extension Act Part A (Part A) subrecipient contract with Tarrant County Hospital District (JPS).

BACKGROUND

Tarrant County has been awarded funding since 1996 under the Ryan White HIV/AIDS Program (RWHAP) Part A HIV Emergency Relief Grant Program. The purpose of this program is to provide direct financial assistance to the Fort Worth/Arlington Transitional Grant Area (TGA), which is severely affected by the HIV epidemic. The RWHAP allows the TGA to develop and enhance access to a comprehensive continuum of high-quality, community-based care for people with HIV who are low-income through the provision of formula, supplemental, and Minority AIDS Initiative (MAI) funds. The goal is to provide optimal HIV care and treatment for people with HIV who are low-income, uninsured, and underserved, to improve their medical outcomes. Tarrant County HIV Administrative Agency (TC-HIVAA) administers the grant funding and subcontracts with community organizations to deliver high-quality services.

JPS has been delivering core medical and support services for people living with HIV for more than twenty-five (25) years. JPS is the safety-net hospital in Tarrant County that provides quality health and mental health care services to the area's most vulnerable populations. This contract supports medical care, prescription assistance, medical case management, and other services.

On February 04, 2025, the Commissioners Court, through Court Order #144705, approved the FY 2025-2026 Ryan White Part A Notice of Award (NOA) for partial funding in the amount of $1,002,747.00.

On April 02, 2025, the Commissioners Court, through Court Order #144952, approved the FY2025-2026 subrecipient contract with JPS in the amount of $366,162.00.

On June 03, 2025, the Commissioners Court, through Court Order #145341, approved Amendment No. 1 to the FY 2025-2026 Ryan White Part A NOA in the amount of $1,475,003.00, increasing funding to $2,477,750.00.

On July 01, 2025, the Commissioners Court, through Court Order #145449, approved Amendment No. 1 to the FY 2025-2026 subrecipient contract with JPS in the amount of $538,641.00 for a total of $904,803.00.

On August 19, 2025, the Commissioners Court, through Court Order #145733, approved Amendment No. 2 to the FY 2025-2026 Ryan White Part A NOA in the amount of $3,069,828.00 for a total of $5,547,578.00.

On September 03, 2025, the Commissioners Court, through Court Order #145824, approved Amendment No. 3 to the FY 2025-2025 Ryan White Part A NOA in the amount of $341,216.00 for a total of $5,888,794.00.

On October 14, 2025, the Commissioners Court, through Court Order #146087, approved Amendment No. 2 to the FY 2025-2026 subrecipient contract with JPS in the amount of $1,124,074.00, for a total of $2,028,877.00.

With approval of Amendment No. 3 to the subrecipient contract, funding will increase by $349,280.00 for a total of $2,378,157.00.

The Part A project period is March 1, 2025, through February 29, 2028. The term of the contract period is March 1, 2025, through February 28, 2026.

The recommended contract is as follows:

JPS – Total reimbursement shall not exceed $2,378,157.00

The Criminal District Attorney's Office has reviewed these documents as to form.

FISCAL IMPACT

All associated costs will be paid from grant allocations as follows:

Part A Funding: Grant-2004 E0028-2026 Health Resources and Services Administration (HRSA) Ryan White Treatment Extension Act Part A (Part A) /1132200000 HIV Subrecipients /569013 Subrecipient Services – net impact: $176,834.00

Part A MAI Funding: Grant-2004 E0028-2026 Health Resources and Services Administration (HRSA) Ryan White Treatment Extension Act Part A (Part A) /1132220000 HIV MAI Subrecipients /569013 Subrecipient Services – net impact: $19,145.00

Part A MAI Carryover Funding: Grant-2004 E0028-2026 Health Resources and Services Administration (HRSA) Ryan White Treatment Extension Act Part A (Part A) /1132230000 Carryover HIV Subrecipients /569013 Subrecipient Services – net impact: $153,301.00

PASSED AND APPROVED on December 9, 2025.

COUNTY OF TARRANT
STATE OF TEXAS

By: Separate Electronic Signature Page
Tim O'Hare
County Judge

APPROVED AS TO FORM:

_____
District Attorney's Office*

*By law, the District Attorney's Office may only approve contracts for its clients. We reviewed this document as to form from our client's legal perspective. Other parties may not rely on this approval. Instead, those parties should seek contract review from independent counsel.

Attachments

Part A FY25-26 Amendment No. 3 (JPS)

Docusign Envelope ID: D03012C6-B6F9-4B4E-9501-7FADBAB0AB77

Amendment No. 3 to Attachment No. A1-2025003
RYAN WHITE PART A, Tarrant County Hospital District, HRSA No. 6 H89HA00047-30-02
March 1, 2025, through February 28, 2026

1. Scope of Work

Tarrant County Hospital District accepts this Amendment and will revise the Work Plan and Agreement to fulfill the Amendment's goals. Total funding, including this Amendment, is $2,378,157.00. The following service categories change:

Decrease	<$52,000.00>	Part A	Food Bank Services for a total of $54,709.00
Decrease	<$30,000.00>	Part A	Medical Case Management for a total of $298,063.00
Decrease	<$43,000.00>	Part A	Medical Nutrition Therapy for a total of $38,765.00
Decrease	<$9,000.00>	Part A	Mental Health Services for a total of $38,139.00
Decrease	<$49,675.00>	Part A	Non-Medical Case Management for a total of $59,883.00
Decrease	<$20,763.00>	Part A	Psychosocial Support Services for a total of $0.00
Increase	$381,272.00	Part A	Outpatient/Ambulatory Health Services for a total of $1,268,015.00
Increase	$19,145.00	Part A MAI	Outpatient/Ambulatory Health Services for a total of $269,380. 00
Increase	$153,301.00	Part A MAI CYO	Outpatient/Ambulatory Health Services for a total of $153,301.00

PART A FY 25-26 (03/01/25-02/28/26)	CURRENT BUDGET			REVISED BUDGET		
Service Categories	**$ Amount**	**# Clients**	**# Units**	**$ Amount**	**# Clients**	**# Units**
AIDS Pharmaceutical Assistance (LPAP/CPAP)	$ 52,665.00	150	908	$ 52,665.00	238	1,252
Early Intervention Services	$ 81,844.00	125	375	$ 81,844.00	30	300
Emergency Financial Assistance	$ 63,393.00	60	70	$ 63,393.00	31	61
Food Bank	$ 106,709.00	240	920	$ 54,709.00	120	460
Medical Case Management	$ 328,063.00	190	4,060	$ 298,063.00	230	3,500
Medical Nutrition Therapy	$ 81,765.00	125	1,050	$ 38,765.00	156	900
Mental Health Services	$ 47,139.00	95	280	$ 38,139.00	33	198
Non-medical Case Management Services	$ 109,558.00	240	2,190	$ 59,883.00	200	1,250
Outpatient/Ambulatory Health Services	$ 886,743.00	825	13,136	$ 1,268,015.00	675	11,429
Psychosocial Support Services	$ 20,763.00	30	150	$ -	-	-

PART A MAI FY 25-26 (03/01/25-02/28/26)	CURRENT BUDGET			REVISED BUDGET		
Service Categories	**$ Amount**	**# Clients**	**# Units**	**$ Amount**	**# Clients**	**# Units**
Outpatient/Ambulatory Health Services	$ 250,235.00	225	6,500	$ 269,380.00	200	4,550

PART A MAI CYO FY 25-26 (03/01/25-02/28/26)	CURRENT BUDGET			REVISED BUDGET		
Service Categories	**$ Amount**	**# Clients**	**# Units**	**$ Amount**	**# Clients**	**# Units**
Outpatient/Ambulatory Health Services	$ -	-	-	$ 153,301.00	89	1,153

Remainder of the page intentionally left blank

2. Special Provisions

PART A FY 25-26 (03/01/25-02/28/26)

Budget Line Item	Current Budget	Revised Budget
Personnel	$ 523,121.02	$ 488,089.36
Fringe	$ 192,680.90	$ 176,302.96
Travel	$ 638.40	$ 310.80
Equipment	$ -	$ -
Supplies	$ 177,519.93	$ 101,355.71
Contractual	$ 727,167.11	$ 1,005,378.02
Other	$ 157,514.64	$ 184,039.15
Total Part A FY 25-26 Budget	$ 1,778,642.00	$ 1,955,476.00

PART A MAI FY 25-26 (03/01/25-02/28/26)

Budget Line Item	Current Budget	Revised Budget
Personnel	$ 56,092.79	$ 56,092.72
Fringe	$ 19,871.65	$ 19,871.72
Travel	$ -	$ -
Equipment	$ -	$ -
Supplies	$ -	$ -
Contractual	$ 150,735.93	$ 169,880.93
Other	$ 23,534.63	$ 23,534.63
Total Part A MAI FY 25-26 Budget	**$ 250,235.00**	**$ 269,380.00**

PART A MAI CYO FY 25-26 (03/01/25-02/28/26)

Budget Line Item	Current Budget	Revised Budget
Personnel	$ -	$ -
Fringe	$ -	$ -
Travel	$ -	$ -
Equipment	$ -	$ -
Supplies	$ -	$ -
Contractual	$ -	$ 153,301.00
Other	$ -	$ -
Total Part A MAI FY 25-26 Budget	$ -	$ 153,301.00
Total Part A, MAI, MAI CYO 25-26 Budget	**$ 2,028,877.00**	**$ 2,378,157.00**

Total reimbursement will not exceed $2,378,157.00, of which ten percent (10%) may be used for administrative costs.

3. Special Provisions

Execution of Agreement. This agreement may be executed in one or more counterparts, each of which will be deemed to be an original copy of this agreement, and all of which, when taken together, shall be deemed to constitute one and the same agreement. The exchange of copies of this agreement and of signature pages by electronic transmission shall constitute effective execution and delivery of this agreement as to the parties and may be used in lieu of the original agreement for all purposes. Signatures of the parties transmitted or executed electronically shall be deemed to be their original signatures for any purpose whatsoever.

Docusign Envelope ID: D03012C6-B6F9-4B4E-9501-7FADBAB0AB77

TARRANT COUNTY HOSPITAL DISTRICT
1500 S. Main Street
Fort Worth, Texas 76104
Attn: Grants and Contracts

By: DocuSigned by: Tricia Elliott, MD BD0CE3A70C13407...

Title: SVP, Academic and Research Affairs

Date: 11/26/25 | 12:36 PM CST

Docusign Envelope ID: D03012C6-B6F9-4B4E-9501-7FADBAB0AB77

PASSED AND APPROVED on _____.

COUNTY OF TARRANT
STATE OF TEXAS

By: Separate Electronic Signature Page
Tim O'Hare
County Judge

APPROVED AS TO FORM:

Separate Electronic Signature Page
District Attorney's Office*

*By law, the District Attorney's Office may only approve contracts for its clients. We reviewed this document as to form from our client's legal perspective. Other parties may not rely on this approval. Instead, those parties should seek contract review from independent counsel.

CERTIFICATION OF FUNDS IN THE AMOUNT OF $_____

Separate Electronic Signature Page
Auditor

TARRANT COUNTY
COMMISSIONERS COURT COMMUNICATION

Court Date: December 9, 2025	**Court Order #:**	**Page:** 1 of 19
Department: Human Resources	**Prepared By:** Rochelle Neal	**Approved By:** Roxie Held

SUBJECT:

Consideration of Professional Services Agreements with ABBA Staffing Consulting and Ad-A-Staff for Typing Test Services

*****CONSENT AGENDA *****

COMMISSIONERS COURT ACTION REQUESTED

It is requested that the Commissioners Court consider Professional Services Agreements with ABBA Staffing Consulting and Ad-A-Staff to continue offering alternate testing sites for applicants.

BACKGROUND

Since FY 2008, the Human Resources Department has utilized ABBA Staffing Consulting and Ad-A-Staff to administer required typing tests for applicants. These agreements have been approved across multiple fiscal years to allow applicants who are unable to travel to the Human Resources Department to complete the typing requirement at alternate testing locations.

On May 23, 2023, the Commissioners Court, through Court Order #140809, approved the most recent agreements with ABBA Staffing Consulting and Ad-A-Staff for the provision of typing test services through FY 2025.

If approved, the updated agreements allow the Human Resources Department to continue offering alternate testing sites and maintain convenient testing locations for applicants for a period of two (2) years.

The Criminal District Attorney's Office has reviewed these documents as to form.

FISCAL IMPACT

There is no fiscal impact to Tarrant County as applicants cover one hundred percent (100%) of cost for the typing test.

Ad-A-Staff will charge a fee of $10.00 for the first typing test taken and $5.00 for each additional test.

ABBA Staffing Consultants will charge a fee of $15.00 for the first typing test taken and $5.00 for each additional test.

PASSED AND APPROVED on December 9, 2025.

COUNTY OF TARRANT
STATE OF TEXAS

By: Separate Electronic Signature Page
Tim O'Hare
County Judge

APPROVED AS TO FORM:

_____
District Attorney's Office*

*By law, the District Attorney's Office may only approve contracts for its clients. We reviewed this document as to form from our client's legal perspective. Other parties may not rely on this approval. Instead, those parties should seek contract review from independent counsel.

Attachments

Typing Test Agreements signed 2025.pdf

STATE OF TEXAS §
§
COUNTY OF TARRANT §

PROFESSIONAL SERVICES CONTRACT

This contract is entered into between Tarrant County, Texas, hereinafter referred to as "COUNTY," and Ad A Staff, hereinafter referred to as "PROVIDER," for the purpose of administering and certifying typing tests for Tarrant County job applicants, hereinafter referred to as "APPLICANT" or "APPLICANTS," which the Commissioners Court finds serves a public purpose and serves the public welfare of the citizens of Tarrant County.

I.
SCOPE OF SERVICES

The services to be provided by the PROVIDER shall include, but are not limited to, the following:

A. PROVIDER will administer typing tests to any Tarrant County APPLICANTS;

B. PROVIDER agrees to provide documentation to each APPLICANT that certifies the results of the APPLICANT'S individual typing test;

C. The certifying documentation will be provided to each APPLICANT who takes a typing test as follows:
   1. said documentation provided on PROVIDER (Ad A Staff) letterhead;
   2. with said documentation to include the APPLICANT'S name, social security number, test date, test score and the signature of an agency representative certifying the test.

D. PROVIDER will make typing tests available to APPLICANTS at the following location:
   1. 524 E. Lamar Blvd, Suite 180
      Arlington, Texas 76011
      (817) 469-6234

E. the PROVIDER agrees that neither the APPLICANT nor the COUNTY shall be obligated to sign any additional contract with the PROVIDER or use any of the PROVIDER'S other services.

II.
TERM

This contract will begin on the date approved below and will continue in effect for a period of two years, unless terminated sooner, as provided herein.

III.
COST

PROVIDER agrees to provide typing test services to the APPLICANT at the rate of ten and no/100ths dollars ($10.00) for the first test taken by said APPLICANT, at said APPLICANT'S expense. If said APPLICANT elects to take any additional typing test(s), PROVIDER agrees to provide the additional typing test at the rate of five and no/100ths dollars ($5.00) per each additional test taken, at said APPLICANT'S expense. The COUNTY will NOT be responsible to PROVIDER to pay for any typing tests done at PROVIDER'S location. All typing testing will be charged directly to the individual APPLICANT, at the above-mentioned rates, and all charges are to be paid by the APPLICANT in cash only. PROVIDER will not accept any other form of payment from said APPLICANTS.

PROVIDER understands that PROVIDER will be responsible for any other expenses incurred by PROVIDER

in performing the services under this contract.

IV.
AGENCY-INDEPENDENT CONTRACT

Neither COUNTY nor any employee thereof is an agent of PROVIDER and neither PROVIDER nor any employee thereof is an agent of COUNTY. This agreement does not and shall not be construed to entitle either party or any of their respective employees, if applicable, to any benefit, privilege or other amenities of employment by the other party.

PROVIDER AGREES TO DEFEND, INDEMNIFY AND HOLD HARMLESS TARRANT COUNTY FROM AND AGAINST ANY LOSS, CLAIM, DEMAND, CAUSE OF ACTION, SETTLEMENT, JUDGMENT, COST, EXPENSE OR ATTORNEY'S FEES WITH RESPECT TO PROVIDER'S PERFORMANCE UNDER THIS CONTRACT.

V.
ASSIGNMENT

Neither party may assign, in whole or in part, any interest it may have in this contract without the prior written consent of the other party.

VI.
THIRD PARTY BENEFICIARY EXCLUDED

No person, not a party to this contract may bring a cause of action pursuant to this contract as a third-party beneficiary. This contract may not be interpreted to waive the sovereign immunity of any party to this contract to the extent such party may have immunity under Texas law.

VII.
AUDIT OF RECORDS

PROVIDER shall be subject to audit by the COUNTY during the term of this contract.

VII.
ENTIRE AGREEMENT

This contract represents the entire understanding of and between the parties and supersedes all prior representations. This contract may not be varied orally but must be amended by written document of subsequent date duly executed by these parties. This contract shall be governed by the laws of the State of Texas and venue for any action under this contract shall be in the district courts of Tarrant County, Texas.

VIII.
TERMINATION

This contract may be terminated by either party by providing written notice to the other party at least thirty (30) days prior to the intended date of termination. Any notice or other writing required by this contract, shall be deemed given when personally delivered or mailed by certified or registered United States mail, return-receipt, postage prepaid, addressed as follows:

COUNTY:
Tarrant County Human Resources
Attn: Shara Kyles, Civil Service Specialist
100 East Weatherford, Suite 301
Fort Worth, Texas 76196
(817) 884-3770

PROVIDER:
Ad A Staff
Attn: Sue Beets, Vice President
704 Hunters Row Court
Mansfield, Texas 76063
(817) 469-6234

IX.
DISCLOSURE

PROVIDER acknowledges and agrees that it has fully, accurately, and completely disclosed all interested parties in the attached Form 1295 and has acknowledged the completeness of this disclosure by filing Form 1295, attached as attachment A, with the Texas Ethics Commission as required by law.

Provider verifies that she does not boycott Israel and will not boycott Israel during the term of this contract. The term "boycott Israel" is as defined by the Texas Government Code Section 808.001, effective September 1, 2017.

APPROVED on this day the ___24th____ day of __November, 2025, by Tarrant County.

Commissioners Court Order No. _____

TARRANT COUNTY,
STATE OF TEXAS

_____
TIM O'HARE
County Judge

PROVIDER

Ad-A-Staff, Inc.
Sue Beets
Signature

Sue Beets, Vice President
Printed Name & Title

APPROVED AS TO FORM:

Kimberly C. Wesley
ASSISTANT CRIMINAL DISTRICT ATTORNEY

PHIL SORRELLS
CRIMINAL DISTRICT ATTORNEY
TARRANT COUNTY, TEXAS
401 West Belknap
Fort Worth, Texas 76196

*By law, the District Attorney's Office may only approve contracts for its clients. We reviewed this document from our client's legal perspective. Other parties may not rely on this approval. Instead, those parties should seek contract review from independent counsel.

Vendor Certification Addendum to Tarrant County Contracts Entered Into on or After September 1, 2021 Required by New Texas State Laws

This Addendum relates to the following contract: **Professional Services Agreement-Tarrant County and Ad-A-Staff**

FISCAL FUNDING ACKNOWLEDGMENT
Notwithstanding any language to the contrary, Vendor acknowledges TARRANT COUNTY is a governmental entity and agrees TARRANT COUNTY (customer) may terminate this Agreement for future fiscal years if sufficient funding is not appropriated or allocated.

LEGAL COMPLIANCE
In providing the services required by this Agreement, Vendor must observe and comply with all applicable federal, state, and local statutes, ordinances, rules, and regulations, including, without limitation, workers' compensation laws, minimum and maximum salary and wage statutes and regulations, and non-discrimination laws and regulations. Vendor shall be responsible for ensuring its compliance with any laws and regulations applicable to its business, including maintaining any necessary licenses and permits.

For All County Contracts Entered into on or after September 1, 2021, Vendor Must Certify:

Vendor is EXEMPT from Certification regarding Energy Companies and Firearm Entities or Firearm Trade Associations:

Vendor is a sole proprietorship OR is a non-profit entity OR Vendor is a company that does NOT have 10 or more full-time employees AND/OR this contract does NOT have a value of $ 100,000.00 or more that is to be paid wholly or partly from public funds of the governmental entity.

If the Vendor Cannot Certify that it is EXEMPT as Above, Vendor Must Certify as Follows:

Vendor is NOT EXEMPT and Certifies as follows:

Boycott of Energy Companies Prohibited. In compliance with Section 2274.002 of the Texas Government Code (added by 87th Legislature, S.B. 13), Vendor verifies that it does not boycott energy companies and will not boycott energy companies during the term of the above-described contract. "Boycott energy company" is defined in Section 809.001(1) (added by 87th Legislature, S.B. 13) and means, without an ordinary business purpose, refusing to deal with, terminating business activities with, or otherwise taking any action that is intended to penalize, inflict economic harm on, or limit commercial relations with a company because the company: (A) engages in the exploration, production, utilization, transportation, sale, or manufacturing of fossil fuel-based

energy and does not commit or pledge to meet environmental standards beyond applicable federal and state law; or (B) does business with a company described by subsection (A).

Discrimination against Firearm Entities or Firearm Trade Associations Prohibited. In compliance with Section 2274.002 of the Texas Government Code (added by 87th Legislature, S.B. 19), Vendor verifies that it does not have a practice, policy, guidance, or directive that discriminates against a firearm entity or firearm trade association; and will not discriminate during the term of the above-described contract] against a firearm entity or firearm trade association. "Discriminate against a firearm entity or firearm trade association" is defined in Section 2274.001(3) (added by 87th Legislature, S.B. 19) and means, with respect to the entity or association, to: (i) refuse to engage in the trade of any goods or services with the entity or association based solely on its status as a firearm entity or firearm trade association; (ii) refrain from continuing an existing business relationship with the entity or association based solely on its status as a firearm entity or firearm trade association; or (iii) terminate an existing business relationship with the entity or association based solely on its status as a firearm entity or firearm trade association; the term *does not include*: (i) the established policies of a merchant, retail seller, or platform that restrict or prohibit the listing or selling of ammunition, firearms, or firearm accessories; and (ii) a company's refusal to engage in the trade of any goods or services, decision to refrain from continuing an existing business relationship, or decision to terminate an existing business relationship: (aa) to comply with federal, state, or local law, policy, or regulations or a directive by a regulatory agency; or (bb) for any traditional business reason that is specific to the customer or potential customer and not based solely on an entity's or association's status as a firearm entity or firearm trade association.

Vendor Hereby Certifies (Mark Applicable Certification):

____ Vendor is EXEMPT from Certification as set out above.

✓ Vendor is NOT EXEMPT from Certification as set out above, and Vendor Certifies that it does not and will not Boycott Energy Companies and that is does not and will not engage in prohibited Discrimination against Firearm Entities or Firearm Trade Associations.

CERTIFIED by:

Signature of Certifying Person

Sue Beets
Printed Name of Certifying Person

Vice President
Title of Certifying Person

Ad-A-Staff, Inc

Name of Vendor Company

11/24/2025

Date Certified

CERTIFICATE OF INTERESTED PARTIES

FORM 1295

Complete Nos. 1 - 4 and 6 if there are interested parties.
Complete Nos. 1, 2, 3, 5, and 6 if there are no interested parties.

OFFICE USE ONLY
CERTIFICATION OF FILING

Certificate Number:
2025-1392186

Date Filed:
11/20/2025

Date Acknowledged:

1 Name of business entity filing form, and the city, state and country of the business entity's place of business.
Ad-A-Staff Inc.
Mansfield, TX United States

2 Name of governmental entity or state agency that is a party to the contract for which the form is being filed.
Tarrant County

3 Provide the identification number used by the governmental entity or state agency to track or identify the contract, and provide a description of the services, goods, or other property to be provided under the contract.
2026
Professional Services Contract - Typing Test

4 Name of Interested Party	City, State, Country (place of business)	Nature of interest (check applicable)	
		Controlling	Intermediary
Holland, Wendi	Mansfield, TX United States	X	
Beets, Sue	Mansfield, TX United States		X

5 Check only if there is NO Interested Party. ☐

6 UNSWORN DECLARATION

My name is Coretta Sue Beets, and my date of birth is 10/7/1956.

My address is 906 Cope St., Midlothian, TX, 76065, USA.
(city) (state) (zip code) (country)

I declare under penalty of perjury that the foregoing is true and correct.

Executed in Ellis County, State of Texas, on the 20 day of Nov. (month), 2025 (year).

Signature of authorized agent of contracting business entity
(Declarant)

STATE OF TEXAS §
§
COUNTY OF TARRANT §

PROFESSIONAL SERVICES CONTRACT

This contract is entered into between Tarrant County, Texas, hereinafter referred to as "COUNTY," and ABBA Staffing Consulting, hereinafter referred to as "PROVIDER," for the purpose of administering and certifying typing tests for Tarrant County job applicants, hereinafter referred to as "APPLICANT" or "APPLICANTS," which the Commissioners Court finds serves a public purpose and serves the public welfare of the citizens of Tarrant County.

I.
SCOPE OF SERVICES

The services to be provided by the PROVIDER shall include, but are not limited to, the following:

A. PROVIDER will administer typing tests to any Tarrant County APPLICANTS;

B. PROVIDER agrees to provide documentation to each APPLICANT that certifies the results of the APPLICANT'S individual typing test;

C. The certifying documentation will be provided to each APPLICANT who takes a typing test as follows:
   1. said documentation provided on PROVIDER (ABBA Staffing Consulting) letterhead;
   2. with said documentation to include the APPLICANT'S name, social security number, test date, test score and the signature of an agency representative certifying the test.

D. PROVIDER will make typing tests available to APPLICANTS at the following location:
   2350 Airport Freeway, Suite 130
   Bedford, Texas 76022
   (817) 354-2800

E. the PROVIDER agrees that neither the APPLICANT nor the COUNTY shall be obligated to sign any additional contract with the PROVIDER or use any of the PROVIDER'S other services.

II.
TERM

This contract will begin on the date approved below and will continue in effect for a period of two years, unless terminated sooner, as provided herein.

III.
COST

PROVIDER agrees to provide typing test services to the APPLICANT at the rate of fifteen and no/100ths dollars ($15.00) for the first test taken by said APPLICANT, at said APPLICANT'S expense. If said APPLICANT elects to take any additional typing test(s), PROVIDER agrees to provide the additional typing test at the rate of five and no/100ths dollars ($5.00) per each additional test taken, at said APPLICANT'S expense. The COUNTY will NOT be responsible to PROVIDER to pay for any typing tests done at PROVIDER'S location. All typing testing will be charged directly to the individual APPLICANT, at the above-mentioned rates.

PROVIDER understands that PROVIDER will be responsible for any other expenses incurred by PROVIDER in performing the services under this contract.

IV.
AGENCY-INDEPENDENT CONTRACT

Neither COUNTY nor any employee thereof is an agent of PROVIDER and neither PROVIDER nor any employee thereof is an agent of COUNTY. This agreement does not and shall not be construed to entitle either party or any of their respective employees, if applicable, to any benefit, privilege or other amenities of employment by the other party.

PROVIDER AGREES TO DEFEND, INDEMNIFY AND HOLD HARMLESS TARRANT COUNTY FROM AND AGAINST ANY LOSS, CLAIM, DEMAND, CAUSE OF ACTION, SETTLEMENT, JUDGMENT, COST, EXPENSE OR ATTORNEY'S FEES WITH RESPECT TO PROVIDER'S PERFORMANCE UNDER THIS CONTRACT.

V.
ASSIGNMENT

Neither party may assign, in whole or in part, any interest it may have in this contract without the prior written consent of the other party.

VI.
THIRD PARTY BENEFICIARY EXCLUDED

No person not a party to this contract may bring a cause of action pursuant to this contract as a third-party beneficiary. This contract may not be interpreted to waive the sovereign immunity of any party to this contract to the extent such party may have immunity under Texas law.

VII.
AUDIT OF RECORDS

PROVIDER shall be subject to audit by the COUNTY during the term of this contract.

VII.
ENTIRE AGREEMENT

This contract represents the entire understanding of and between the parties and supersedes all prior representations. This contract may not be varied orally but must be amended by written document of subsequent date duly executed by these parties. This contract shall be governed by the laws of the State of Texas and venue for any action under this contract shall be in the district courts of Tarrant County, Texas.

VIII.
TERMINATION

This contract may be terminated by either party by providing written notice to the other party at least thirty (30) days prior to the intended date of termination. Any notice or other writing required by this contract, shall be deemed given when personally delivered or mailed by certified or registered United States mail, return-receipt, postage prepaid, addressed as follows:

COUNTY:
Tarrant County Human Resources
Attention: Shara Kyles, Civil Service Specialist
100 East Weatherford, Suite 301
Fort Worth, Texas 76196
(817) 884-3770

PROVIDER:
ABBA Staffing Consulting
Attention: Souksada Lam, President
2350 Airport Freeway, Suite 130
Bedford, Texas 76022
(817) 354-2800

IX.
DISCLOSURE

PROVIDER acknowledges and agrees that it has fully, accurately, and completely disclosed all interested parties in the attached Form 1295 and has acknowledged the completeness of this disclosure by filing Form 1295, attached to Attachment A, with the Texas Ethics Commission as required by law.

PROVIDER verifies that she does not boycott Israel and will not boycott Israel during the term of this contract. The term "boycott Israel" is as defined by the Texas Government Code Section 808.001, effective September 1, 2017.

APPROVED on this day the 24th day of November, 2025, by Tarrant County.

Commissioners Court Order No. _____

TARRANT COUNTY,
STATE OF TEXAS

TIM O'HARE
County Judge

PROVIDER

Souksada Lam
Signature

Souksada Lam / President
Printed Name & Title

APPROVED AS TO FORM:

Kimberly C. Wesley
ASSISTANT CRIMINAL DISTRICT ATTORNEY

Criminal Assistant District Attorney
PHIL SORRELLS
CRIMINAL DISTRICT ATTORNEY
TARRANT COUNTY, TEXAS
401 West Belknap
Fort Worth, Texas 76196

*By law, the District Attorney's Office may only approve contracts for its clients. We reviewed this document from our client's legal perspective. Other parties may not rely on this approval. Instead, those parties should seek contract review from independent counsel.

Vendor Certification Addendum to Tarrant County Contracts Entered Into on or After September 1, 2021 Required by New Texas State Laws

This Addendum relates to the following contract: **Professional Services Agreement-Tarrant County and ABBA Staffing Consulting**

FISCAL FUNDING ACKNOWLEDGMENT
Notwithstanding any language to the contrary, Vendor acknowledges TARRANT COUNTY is a governmental entity and agrees TARRANT COUNTY (customer) may terminate this Agreement for future fiscal years if sufficient funding is not appropriated or allocated.

LEGAL COMPLIANCE
In providing the services required by this Agreement, Vendor must observe and comply with all applicable federal, state, and local statutes, ordinances, rules, and regulations, including, without limitation, workers' compensation laws, minimum and maximum salary and wage statutes and regulations, and non-discrimination laws and regulations. Vendor shall be responsible for ensuring its compliance with any laws and regulations applicable to its business, including maintaining any necessary licenses and permits.

For All County Contracts Entered into on or after September 1, 2021, Vendor Must Certify:

Vendor is EXEMPT from Certification regarding Energy Companies and Firearm Entities or Firearm Trade Associations:

Vendor is a sole proprietorship OR is a non-profit entity OR Vendor is a company that does NOT have 10 or more full-time employees AND/OR this contract does NOT have a value of $ 100,000.00 or more that is to be paid wholly or partly from public funds of the governmental entity.

If the Vendor Cannot Certify that it is EXEMPT as Above, Vendor Must Certify as Follows:

Vendor is NOT EXEMPT and Certifies as follows:

Boycott of Energy Companies Prohibited. In compliance with Section 2274.002 of the Texas Government Code (added by 87th Legislature, S.B. 13), Vendor verifies that it does not boycott energy companies and will not boycott energy companies during the term of the above-described contract. "Boycott energy company" is defined in Section 809.001(1) (added by 87th Legislature, S.B. 13) and means, without an ordinary business purpose, refusing to deal with, terminating business activities with, or otherwise taking any action that is intended to penalize, inflict economic harm on, or limit commercial relations with a company because the company: (A) engages in the exploration, production, utilization, transportation, sale, or manufacturing of fossil fuel-based

energy and does not commit or pledge to meet environmental standards beyond applicable federal and state law; or (B) does business with a company described by subsection (A).

Discrimination against Firearm Entities or Firearm Trade Associations Prohibited. In compliance with Section 2274.002 of the Texas Government Code (added by 87th Legislature, S.B. 19), Vendor verifies that it does not have a practice, policy, guidance, or directive that discriminates against a firearm entity or firearm trade association; and will not discriminate during the term of the above-described contract] against a firearm entity or firearm trade association. "Discriminate against a firearm entity or firearm trade association" is defined in Section 2274.001(3) (added by 87th Legislature, S.B. 19) and means, with respect to the entity or association, to: (i) refuse to engage in the trade of any goods or services with the entity or association based solely on its status as a firearm entity or firearm trade association; (ii) refrain from continuing an existing business relationship with the entity or association based solely on its status as a firearm entity or firearm trade association; or (iii) terminate an existing business relationship with the entity or association based solely on its status as a firearm entity or firearm trade association; the term *does not include*: (i) the established policies of a merchant, retail seller, or platform that restrict or prohibit the listing or selling of ammunition, firearms, or firearm accessories; and (ii) a company's refusal to engage in the trade of any goods or services, decision to refrain from continuing an existing business relationship, or decision to terminate an existing business relationship: (aa) to comply with federal, state, or local law, policy, or regulations or a directive by a regulatory agency; or (bb) for any traditional business reason that is specific to the customer or potential customer and not based solely on an entity's or association's status as a firearm entity or firearm trade association.

Vendor Hereby Certifies (Mark Applicable Certification):

X
____ Vendor is EXEMPT from Certification as set out above.

____ Vendor is NOT EXEMPT from Certification as set out above, and Vendor Certifies that it does not and will not Boycott Energy Companies and that is does not and will not engage in prohibited Discrimination against Firearm Entities or Firearm Trade Associations.

CERTIFIED by:

Souksada Lam
Signature of Certifying Person

Souksada Lam
Printed Name of Certifying Person

President
Title of Certifying Person

AllTex Staffing & Consulting DBA Abba Staffing & Consulting LLC.

Name of Vendor Company

11/24/25

Date Certified

CERTIFICATE OF INTERESTED PARTIES

FORM 1295

Complete Nos. 1 - 4 and 6 if there are interested parties.
Complete Nos. 1, 2, 3, 5, and 6 if there are no interested parties.

OFFICE USE ONLY
CERTIFICATION OF FILING

Certificate Number:
2025-1392914

Date Filed:
11/24/2025

Date Acknowledged:

1 Name of business entity filing form, and the city, state and country of the business entity's place of business.

AllTex Staffing & Consulting LLC. DBA Abba Staffing & Consulting LLC.
Bedford, TX United States

2 Name of governmental entity or state agency that is a party to the contract for which the form is being filed.

Tarrant County

3 Provide the identification number used by the governmental entity or state agency to track or identify the contract, and provide a description of the services, goods, or other property to be provided under the contract.

Professional Services Contract
Abba Staffing will administer typing tests to any Tarrant County applicants

4 Name of Interested Party	City, State, Country (place of business)	Nature of interest (check applicable)	
		Controlling	Intermediary

5 Check only if there is NO Interested Party. [X]

6 UNSWORN DECLARATION

My name is _____, and my date of birth is _____.

My address is _____, _____, _____, _____, _____.
(city) (state) (zip code) (country)

I declare under penalty of perjury that the foregoing is true and correct.

Executed in _____County, State of _____, on the _____day of _____, 20_____.
(month) (year)

_____
Signature of authorized agent of contracting business entity
(Declarant)

TARRANT COUNTY
COMMISSIONERS COURT COMMUNICATION

Department: Human Resources **Prepared By:** Glorimar Lugo Ortiz **Approved By:** Roxie Held

SUBJECT:

Consideration of Administrative Agreements and Implementation Documents between Tarrant County and The Standard Insurance Company for Voluntary Benefits Effective January 1, 2026

***** CONSENT AGENDA *****

COMMISSIONERS COURT ACTION REQUESTED

It is requested that the Commissioners Court consider the Master Agreement, Service Agreement, and related implementation documents with The Standard Insurance Company for Tarrant County's Life and Disability Insurance Programs, effective January 1, 2026.

BACKGROUND

As part of the annual implementation cycle, The Standard Insurance Company (The Standard) has provided the following administrative agreements and implementation documents required to administer the County's Life and Disability Insurance Programs for the 2026 plan year:

- Master Agreement - Establishes the overall terms under which The Standard will provide administrative services to the County, effective January 1, 2026.
- Member Notification (Portability and Conversion) Service Agreement - Enables The Standard to provide required life insurance portability and conversion notices to employees and dependents, based on eligibility feeds provided by the County.
- Group Application - Documents County-specific information and identifies all group insurance products administered by The Standard, effective January 1, 2026. (Signature and initials required.)
- STD FICA Tax Agreement - Outlines The Standard's responsibility to calculate, withhold, and remit employer FICA and Medicare taxes on Short-Term Disability benefits for W2 reporting purposes.
- Amendment Request Form - Requests an increase to the Reasonable Accommodation Benefit to $25,000 under the County's Long-Term Disability policy, effective January 1, 2026, with a revised LTD rate of 0.120% of pre-disability earnings.

Approval of these agreements and documents authorizes The Standard to implement the 2026 plan year updates, issue required employee notifications, carry out disability related tax reporting, and administer the Life and Disability Insurance Programs under the updated provisions, effective January 1, 2026.

The agreements and documents have been approved as to form by the District Attorney's Office.

FISCAL IMPACT

There is no fiscal impact to Tarrant County associated with approving these agreements. Premium rates for Life and Disability programs were previously approved through the benefits renewal process. The administrative agreements do not impose additional fees beyond those already incorporated into the group policy premiums.

PASSED AND APPROVED on December 9, 2025.

COUNTY OF TARRANT
STATE OF TEXAS

By: Separate Electronic Signature Page
Tim O'Hare
County Judge

APPROVED AS TO FORM:

_____
District Attorney's Office*

*By law, the District Attorney's Office may only approve contracts for its clients. We reviewed this document as to form from our client's legal perspective. Other parties may not rely on this approval. Instead, those parties should seek contract review from independent counsel.

Attachments

631762 - TC - Port & Convert Agreement - Signature Needed.pdf
631762 - TC Master Agreement - Signature Needed.pdf
Amendment Request Form - 631762 - Tarrant County - Signature Needed.pdf
Group Application - Tarrant County - Signature Needed.pdf
STD FICA Tax Service Agreement - Tarrant County - Signature Needed.pdf

STANDARD INSURANCE COMPANY

A Stock Life Insurance Company

900 SW Fifth Avenue
Portland, Oregon 97204-1282

MEMBER NOTIFICATION SERVICE AGREEMENT

Client:	Tarrant County
Group Life Insurance Policy Number(s):	631762-B
Master Agreement Number:	631762
Service Agreement Number:	631762
Service Agreement Effective Date:	January 1, 2026

This Service Agreement is made part of the above referenced Master Agreement between Standard Insurance Company (Standard) and Client.

1. Member Notification Services.

A. Group Policy means the group life insurance policy that Standard issued to Client as Policyholder under the Group Insurance Policy Number shown above.

B. Standard shall provide administrative services for notification of group life insurance portability and group life insurance conversion under the terms of the Group Policy. These services consist of sending notification on behalf of Client to Members included on Client's data feed except as noted in Section 4 below regarding potential eligibility to apply for group life insurance portability and group life insurance conversion under the Group Policy.

2. Client's Obligations.

A. Client obligations shall consist of:

(1) Providing data transfers as shown in Exhibit A, Eligibility Feed Specifications, to Standard on a weekly basis.

(2) Establishing the technologies, standards and use-cases, satisfactory to Standard, which ensure that Client's technology information systems are capable of securely and accurately completing the data transfers described in Exhibit A.

(3) Employing an implementation of the technologies, standards and use-cases supported by Standard, which serve to enable the transfer of data between Standard's technology information systems and Client's technology information systems, and install any software on its systems that may be required to accomplish this.

a. Bear all its own costs and expenses in connection with the performance of its obligations described in 2.A.(2) and (3);

b. Provide technical and administrative contact information as necessary to facilitate contact by Standard;

c. Apply industry best practices in securing its information technology systems, including promptly applying relevant security patches to systems;

d. Act in a manner that complies with federal, state or local laws and rules;

e. Maintain industry standard policies and standards for (i) defining the attributes required to access its information technology systems (ii) protection of personal information of insured members and (iii) ensuring that personal information is protected from access requests by unauthorized parties.

(4) Client is solely responsible for securing access to its transmission facilities or equipment and securing access to or preventing alteration, delay, theft or destruction of its (or its end users') data file, programs, procedures or other information.

(5) Client agrees that any Client information technology systems may cache temporarily credentials that are supplied by it for operational efficiency or sequential, repeated authentication purposes within a given session or reasonable length episode. Any shared attributes/credentials will not be used for any purpose or intent, and such credentials will be destroyed at the end of the session or episode in which they are needed. With the exception of anonymous attributes, such shared attributes/credentials will not be stored permanently.

(6) Standard may, at its own expense, and upon reasonable notice, audit Client's information technology systems to determine if Client is in compliance with this Service Agreement. Client shall cooperate with Standard in the conduct of such audit.

(7) Furnishing any information reasonably required by Standard to carry out its duties under this Service Agreement.

3. Fees and Payment.

A. The fee is $0.30 per insured Member, per year, with a minimum charge of $1,000 per year. The fee is included in the premium charge for Group Life Insurance Policy Number 631762-B.

B. Standard may, upon providing notice to Member no less than 30 days prior, change the amount, the method of determination, or both, of any fees not yet due, when a change in any law or regulation affects the manner in which Standard performs any function under this Service Agreement. The amount, the method of determination, or both, of any fees not yet due may also be changed upon mutual agreement between Client and Standard.

C. Standard may, upon providing notice to Member no less than 30 days prior, change the amount, the method of determination, or both, of any fees not yet due, upon 254 days written notice to Client. No such change in fees shall be made more than once in any calendar year, provided that this limitation shall not apply to any changes in fees in connection with any change in the terms of this Service Agreement, or the Group Policy or changes in laws.

D. All fees are due and payable in accordance with the provisions of the Group Policy.

E. Standard reserves the right to charge interest at the statutory interest rate set forth in Texas Government Code Sec. 2251.025 on any late payment under this Service Agreement in accordance with the provisions of the Group Policy.

4. Disclaimer.

A. Standard will not provide group life insurance portability or group life insurance conversion notifications if the Member's insurance ended more than 45 days prior to Standard's receipt of Client's data feed.

B. Standard will not provide group life insurance portability or group life insurance conversion notifications to Members living outside the United States or Canada.

C. Standard will not provide group life insurance conversion notification when loss of coverage is due to failure to pay premiums.

D. Standard will not provide group life insurance conversion notification when coverage is reduced due to a change in the Member's classification.

E. Standard will not provide group life insurance conversion notification to spouse and/or child dependents.

F. Standard has not and will not provide legal advice, opinions or other legal services to Client relative to this Service Agreement. Client will rely solely upon the advice of its own legal counsel in evaluating the legal aspects of the Group Policy and the Service Agreement.

G. Standard shall not be considered to have failed to perform its obligations under this Service Agreement if any delay or nonperformance on its part is due, in whole or in part, to Client's failure to discharge its own obligations promptly.

H. After the termination of this Service Agreement, Standard shall have no further obligation of any nature or kind for providing notifications.

5. Records.

Any records, reports and other information prepared and maintained by Standard pursuant to this Service Agreement may be destroyed by Standard in accordance with its normal document retention and destruction policies.

6. Notices.

Standard will not be bound by any notice, direction, requisition, or request, unless and until it is received in writing at Standard's Home Office in Portland, Oregon.

7. Termination.

Client will provide Standard with 30 days advance notice of policy termination. This Service Agreement will terminate automatically on the date the last Group Policy terminates.

The parties are signing this Service Agreement on the dates indicated below.

STANDARD INSURANCE COMPANY	TARRANT COUNTY
By: _____	By: _____
Name: _____	Name: _____
Title: _____	Title: _____
Date: _____	Date: _____

STANDARD INSURANCE COMPANY

A Stock Life Insurance Company 900 SW Fifth Avenue
Portland, Oregon 97204-1282

MASTER AGREEMENT

Client:	Tarrant County
Master Agreement Number:	631762
Master Agreement Effective Date:	January 1, 2026

This "Master Agreement" (the "Agreement") is between Client and Standard Insurance Company, an Oregon corporation ("Standard").

Client and Standard agree as follows:

1. **Services**.
    A. Standard shall provide services in accordance with written service agreements, each of which shall reference this Agreement and constitute a separate transaction independent of other service agreements. Standard shall provide the services during the term provided for in the service agreements. Service agreements are subject to the terms of this Agreement. Each service agreement will contain additional terms and conditions specific to the services described in that service agreement. No service agreement will be effective unless it has been signed by Client and accepted by Standard. In the event of a conflict between any terms of this Agreement and those contained in a service agreement, the conflicting terms in the service agreement will prevail; however, the specific or additional terms set forth in any service agreement shall apply to the parties' rights and obligations under that service agreement only, and not to any other service agreement.
    B. Any change in services will be set forth in a written amendment to the applicable service agreement. No amendment will be effective unless it has been signed by Client and accepted by Standard.
2. **Use of Name**. Except to the extent necessary to perform services and to fulfill obligations under a service agreement, neither party shall use the name, trademark, logo or identification of the other party without the other party's prior written consent.
3. **Right to Inspect Records**. Each party agrees to allow the other, on reasonable written notice and at reasonable time and places, to inspect and photocopy, at the inspecting party's sole expense, any material files and records in such party's possession relating to the service performed under a service agreement.
4. **Assignment and Subcontracting**. This Agreement shall not be assigned by either party without the other party's written consent. Standard may subcontract for the performance of any of its services under this Agreement or service agreement.
5. **Relationship of the Parties**. Standard and Client are each acting under this Agreement and any service agreement as an independent contractor and not as an employee, joint venturer or partner of the other. Neither party nor their respective employees shall have any authority to make any representation, contract or commitment on behalf of the other party unless specifically requested or authorized to do so by authorized personnel of such other party.
6. **Employee Benefit Plan Services and Fiduciary Status of Standard**. It is understood that with respect to any services Standard may provide under this Agreement or any written service agreements incorporated herein

that relates to an employee benefit plan, the legal and tax status of such plan under applicable law are matters for the Client's determination, and that Standard bears no such responsibility. Final authority and responsibility for any sch plans and their operation are vested in the Client, and Standard is empowered to act on behalf of the Client for such plans only as expressly stated in this Agreement or as mutually agreed in writing by Standard and the Client. It is further understood that Standard is neither the administrator, a fiduciary nor a named fiduciary of such plans for purposes of the Employee Retirement Income Security Act of 1974 or any state law of similar nature. Client represents and warrants that no such plans currently or at any time will designate Standard the administrator, a fiduciary nor a named fiduciary of such plans, except as expressly agreed to by Standard or as required by applicable law.

7. **Indemnification**.

   A. Standard shall indemnify and hold Client harmless from any and all liability, loss, damages, fines, penalties and costs, including reasonable expenses and reasonable attorneys' fees, which Client, its officers, agents and employees may sustain by reason of negligence, intentional wrongdoing, fraud or criminal conduct of Standard's employees or agents.

   B. Client shall indemnify and hold Standard harmless from any and all liability, loss, damages, fines, penalties and costs, including reasonable expenses and reasonable attorney's fees, which Standard, its officers, agents and employees may sustain by reason of 1) Client's gross negligence, intentional wrongdoing, fraud or criminal conduct (2) Client's failure to provide correct, accurate, and complete information, including any updates thereto, as required under any service agreement, (3) Client's failure to comply with Standard's written instructions or recommendations, or (4) Standard complying with Client's written instructions including as set forth in Section 9(C). Notwithstanding any other provision herein, Client's obligation hereunder to indemnify and hold harmless Standard is only to the extent permitted by the laws and Constitution of the State of Texas, and only to the extent the Texas Legislature waives Client's existing immunity. Nothing in this indemnification provision requires that the Client incur any debt, assess or collect funds, or create a sinking fund.

8. **Termination**. Termination of a service agreement does not terminate this Agreement. However, termination of the Agreement does terminate all service agreements. This Agreement may be terminated as follows:

   A. **Without Cause**. Either party may terminate this Agreement or any active service agreement by providing the other party at least 60 days prior written notice.

   B. **Default**. Either party may terminate this Agreement or any service agreement if the other party breaches or is in default of any obligation of this Agreement or any active service agreement, which default is incapable of cure or which, being capable of cure, has not been cured within 10 days after receipt of written notice (or within such additional cure period as the nondefaulting party may authorize).

9. **Confidential Information**.

   A. "Confidential Information" means Client's information that is not generally released to third parties in the absence of confidentiality requirements; or is not generally released to third parties unless required by law; or is classified under state or federal law as confidential or private information which disclosure is restricted by law; or is proprietary to Client or the disclosure of which would be detrimental to Client.

   B. Standard shall maintain the confidential and proprietary nature of Confidential information and shall: (i) restrict disclosure of such Confidential Information to its own employees to whom the Standard determines disclosure is reasonably necessary as having a "need to know"; (ii) advise such persons of the obligations of confidentiality hereunder with respect to such Confidential Information; (iii) make disclosures to third party contractors and other non-employees under Standard's control who have a "need to know" only if such third party contractors and other non-employees execute a non-disclosure agreement that require they treat Confidential Information with the same degree of care, and to limit disclosure of Confidential Information, as set forth in the terms and conditions of this Agreement; (iv) limit the number of copies made of such Confidential Information to those reasonably necessary to fulfill the purpose of this Agreement or service agreement (and reproduce any legends or notices of the confidentiality or proprietary nature on each copy), except that no copies shall be made of computer software programs or related documentation except pursuant to the terms of any separate license or other agreement governing Standard's rights in that software or documentation; (v) use such

Confidential Information only for the purposes of this Agreement or service agreement and in accordance with applicable laws and regulations; (vi) share Confidential Information, including with third parties, only for the benefit of the client for the purposes of this Agreement or service agreement, or any other applicable agreements between Standard and the Client, provided that such sharing is in compliance with cybersecurity and privacy statutory frameworks such as but not limited to: the California Consumer Privacy Act, the California Privacy Rights Act, the Health Information Portability and Accountability Act, and the Gramm-Leach Bliley Act and; (vii) use substantially the same degree of care to maintain the confidentiality of such Confidential Information as Standard uses with respect to its own Confidential Information (but in any event not less than a reasonable standard of care). These obligations do not apply to information or materials that are or become generally known by third parties other than as a result of an act or omission by Standard; were already independently known by Standard prior to receiving them from Client; or are developed independently by Standard.

C. At Client's direction, Standard shall share Client Confidential Information with third parties to streamline and coordinate the administration of benefits and management of employees. Client shall obtain all necessary rights, consents, and authority to direct such sharing, and Standard shall have no liability for complying with Client's directions.

D. Standard may disclose Confidential Information if required by law.

E. **Texas Public Information Act**. Client advises Standard that Client is a governmental body under Chapter 552 of the Texas Government Code and that certain information that is collected, assembled, or maintained in connection with the transaction of official business by a governmental body is considered public information potentially subject to disclosure pursuant to a valid Texas Public Information Act ("TPIA") request. Standard's trade secrets, certain financial information, and proprietary information may be subject to an exception to disclosure under Chapter 552 of the Texas Government Code, Subchapter C. If a TPIA request is made on Client to disclose Standard information that may be subject to an exception from disclosure, Client will (i) promptly notify Standard of such request for disclosure, and (ii) decline to release such information and file a written request with the Texas Attorney General's office seeking a determination as to whether such information may be withheld.

10. **Warranties**. Standard warrants that:

    A. It is licensed to conduct its business as it is now being conducted and is authorized to do business in each state in which it provides services;

    B. The services will be performed on time and will be performed in a professional manner in accordance with service providers practicing under similar conditions and in accordance with generally acceptable industry standards;

    C. The services will be performed in accordance with all applicable laws, regulations or other legal requirements in effect as of the date services are performed; and

    D. Its personnel are trained, qualified and have direct experience in performing the services. Standard warrants the performance of any subcontractor used in performance of the services in the same manner that Standard warrants its own personnel.

11. **Force Majeure**. Neither party shall be responsible for any delay or failure in performance of any part of this Agreement or service agreement to the extent that such delay or failure is caused by fire, flood, explosion, war, embargo, government requirement, civil or military authority, act of God, act or omission of carriers or other similar causes beyond its control.

12. **Governing Law**. This Agreement and all service agreements shall be subject to and construed under the laws of the State of Texas. Any legal action arising out of or relating to the Agreement shall be brought only in the state or federal courts located in Tarrant County, Texas, and the parties irrevocably consent to the jurisdiction and venue of such courts.

13. **Entire Agreement**. This Agreement constitutes the entire Agreement between the parties with respect to its subject matter. This Agreement supersedes any and all other agreements, whether oral or written, between the parties with respect to its subject matter.

14. **Amendment and Waiver**. Except as expressly provided in this Agreement, neither this Agreement, service

agreement, nor any term thereof may be amended, waived, discharged or terminated other than by a written instrument signed by both parties. The failure of either party to insist on strict compliance with this Agreement or any service agreement, or to exercise any right or remedy under this Agreement or any service agreement, shall not constitute a waiver of any rights or remedies provided under this Agreement or any service agreement, nor stop the parties from demanding full and complete compliance nor prevent the parties from exercising such a right or remedy in the future.

15. **Severability**. If any provision of this Agreement or any service agreement becomes invalid or unenforceable by reason of any change in the law or by reason of the decision of any court or government agency, the remaining provisions shall remain in effect unless either party determines in good faith that the elimination of the provision found to be invalid or unenforceable subjects that party to prosecution, civil penalty, loss of license or material economic burden in which event that party may notify the other party in writing and seek renegotiation of that portion of the Agreement or service agreement found to be invalid or unenforceable.

Email: Alycia Harp, aharp@pebcinfo.com

16. **SOVEREIGN/GOVERNMENTAL IMMUNITY**. THIS AGREEMENT IS EXPRESSLY MADE SUBJECT TO THE CLIENT'S SOVEREIGN AND GOVERNMENTAL IMMUNITY, TITLE 5 OF THE TEXAS CIVIL PRACTICE AND REMEDIES CODE, AND ALL APPLICABLE FEDERAL AND STATE LAW. THE PARTIES EXPRESSLY AGREE THAT NO PROVISION OF THIS AGREEMENT IS IN ANY WAY INTENDED TO CONSTITUTE A WAIVER OF ANY IMMUNITIES FROM SUIT OR FROM LIABILITY THAT THE CLIENT HAS BY OPERATION OF LAW. NOTHING IN THIS AGREEMENT IS INTENDED TO BENEFIT ANY THIRD-PARTY BENEFICIARY.

17. **Chapters 2271, 2252, 2274, and 2276 Texas Government Code Verification**.

    A. **Boycott of Israel Prohibited**. In compliance with Section 2271.001 et seq. of the Texas Government Code, Standard verifies that neither it nor any of its affiliates currently boycott Israel and neither it nor any of its affiliates will boycott Israel during the term of this Agreement. "Boycott Israel" is defined in Section 808.001(1) of the Texas Government Code.

    B. **Scrutinized Business Operations Prohibited**. In compliance with Section 2252.151 et seq. of the Texas Government Code, Standard warrants and represents that: (1) neither Standard nor any of its affiliates engages in scrutinized business operations in Sudan; (2) neither Standard nor any of its affiliates engages in scrutinized business operations in Iran; and (3) neither Standard nor any of its affiliates engages in scrutinized business operations with designated foreign terrorist organizations. "Scrutinized business operations in Sudan" is defined in Section 2270.0052 of the Texas Government Code. "Scrutinized business operations in Iran" is defined in Section 2270.0102 of the Texas Government Code. "Scrutinized business operations with designated foreign terrorist organizations" is defined in Section 2270.0152 of the Texas Government Code. Standard further represents and warrants that neither Standard nor any of its affiliates appears on any of the Texas Comptroller's Scrutinized Companies Lists.

    C. **Discrimination Against Firearm Entities or Firearm Trade Associations Prohibited**. In compliance with Section 2274.002 of the Texas Government Code, Standard verifies that neither it nor any of its affiliates have a practice, policy, guidance, or directive that discriminates against a firearm entity or firearm trade association; and neither it nor any of its affiliates will discriminate during the term of the Agreement against a firearm entity or firearm trade association. "Discriminate against a firearm entity or firearm trade association" is defined in Section 2274.001(3).

    D. **Boycott of Certain Energy Companies Prohibited**. In compliance with Section 2276.002 of the Texas Government Code, Standard verifies that neither it nor any of its affiliates currently boycott energy companies and neither it nor any of its affiliates will boycott energy companies during the term of this Agreement. "Boycott energy company" is defined in Section 809.001(1) of the Texas Government Code.

18. **Exclusion and Ethics**.

    A. Standard agrees that it will immediately report in writing to the Client in the event, if ever, Standard, including any of its officers, directors, employees, contractors or agents, becomes a target of any criminal investigation or any investigation that could result in debarment or exclusion Standard or such

other person from federally or state funded healthcare programs.

B. Standard warrants and represents to Client that Standard has never been:

   a. convicted of a criminal offense;

   b. listed by a federal agency as debarred, excluded or otherwise ineligible for federal plan participation;

   c. sanctioned by any federal or state law enforcement, regulatory or licensing agency; or,

   d. excluded from any state or federal healthcare program.

C. Standard further warrants and represents to the Client that neither Standard, nor any of Standard's officers, directors, members, partners, shareholders (excluding shareholders, members and limited partners that own less than 5% of the combined voting power of Standard), employees, contractors or agents:

   a. is currently under criminal investigation or any investigation that could result in debarment or exclusion from federally or state funded healthcare programs; or

   b. has ever been:

      i. convicted of a criminal offense that is a felony or a misdemeanor of moral turpitude;

      ii. listed by a federal agency as debarred, excluded or otherwise ineligible for Federal plan participation;

      iii. sanctioned by any federal or state law enforcement, regulatory or licensing agency; or,

      iv. excluded from any state or federal healthcare program.

D. In the event that any of the foregoing representations in this Section 21(b) or (c) ceases to be true, Standard will immediately report same in writing to the Client.

E. Upon receipt of any report required by Standard hereunder or in the event of a failure to report by Standard, the Client may without penalty terminate this Agreement and other than the payment of any amounts due and owing through the date of termination, the Client shall have no further obligations or liabilities hereunder.

19. **Compliance with Laws**. In providing the services required by this Agreement, Standard must observe and comply with all applicable federal, state, and local statutes, ordinances, rules, and regulations, including, without limitation, workers' compensation laws, minimum and maximum salary and wage statutes and regulations, and non-discrimination laws and regulations. Standard shall be responsible for ensuring its compliance with any laws and regulations applicable to its business, including maintaining any necessary licenses and permits.

20. **Notices**. All notices, requests, demands and other communications required or permitted hereunder shall be in writing and shall be deemed to have been duly given (a) when received by the party to whom directed; (b) when sent by fax transmission to the following fax numbers or (solely with respect to Standard) by email to the following email addresses; or (c) when deposited in the United States mail when sent by certified or registered mail, return receipt requested, postage prepaid to the following addresses (or at such other addresses or fax numbers as shall be given in writing by either party to the other):

If to Client: Tim O'Hare
Tarrant County Judge
100 E. Weatherford St., Suite 501
Fort Worth, TX 76196

And

Roxie Held
Director, Tarrant County Human Resources

100 E. Weatherford St., Suite 301
Fort Worth, TX 76196

With a copy to:

Tarrant County District Attorney's Office, Civil Division
Attn: Chief Civil Division
Tim Curry Criminal Justice Center
401 West Belknap
Fort Worth, Texas 76196

If to Standard: Standard Insurance Company
Attn: Alecia Patrick, HIA | Employee Benefits Account Manager
7500 College Blvd, Ste 750 | Overland Park, KS 66210
Phone 971-321-2239
Alecia.Patrick@standard.com | www.standard.com

21. **Certificate of Interested Parties (Form 1295)**. To the extent required by law, Standard acknowledges that it has fully, accurately, and completely disclosed all interested parties in the Form 1295 electronically filed with the Texas Ethics Commission.

22. **Title VI Assurances and Compliance**. This Agreement is subject to applicable federal and state laws and executive orders, including the Fair Labor Standards Act of 1938, relating to equal opportunity and nondiscrimination in employment. Neither Standard nor its agents or subcontractors shall discriminate in their employment practices against any person by reason of disability, age, race, creed, national origin, color, religion, sex, political affiliation, or veteran status. In addition, Standard assures that no person will, on the grounds of disability, age, race, creed, national origin, color, religion, sex, political affiliation, or veteran status, be excluded from, be denied the benefit of or be subjected to discrimination under any program or activity funded in whole or in part under this Agreement. Standard agrees to comply, and to cause its agents and subcontractors to comply, with the provisions of said laws and orders to the extent any such laws and orders are applicable in the performance of this Agreement. Standard agrees to comply with its Title VI assurances contained in **Exhibit 1** which is attached to this Agreement.

23. **Duplicate Originals**. This Agreement may be executed in one or more counterparts, each of which will be deemed to be an original copy of this Agreement, and all of which, when taken together, shall be deemed to constitute one and the same agreement. The exchange of copies of this Agreement and of signature pages by electronic transmission shall constitute effective execution and delivery of this Agreement as to the parties and may be used in lieu of the original Agreement for all purposes. Signatures of the parties transmitted or executed electronically shall be deemed to be their original signatures for any purpose whatsoever.

24. **Certificate of Interested Parties (Form 1295)**. To the extent required by law, Standard acknowledges that it has fully, accurately, and completely disclosed all interested parties in the Form 1295 electronically filed with the Texas Ethics Commission.

25. **Title VI Assurances and Compliance**. This Agreement is subject to applicable federal and state laws and executive orders, including the Fair Labor Standards Act of 1938, relating to equal opportunity and nondiscrimination in employment. Neither Standard nor its agents or subcontractors shall discriminate in their employment practices against any person by reason of disability, age, race, creed, national origin, color, religion, sex, political affiliation, or veteran status. In addition, Standard assures that no person will, on the grounds of disability, age, race, creed, national origin, color, religion, sex, political affiliation, or veteran status, be excluded from, be denied the benefit of or be subjected to discrimination under any program or activity funded in whole or in part under this Agreement. Standard agrees to comply, and to cause its agents and subcontractors to comply, with the provisions of said laws and orders to the extent any such laws and orders are applicable in the performance of this Agreement. Standard agrees to comply with its Title VI assurances contained in **Exhibit 1** which is attached to this Agreement.

26. **Duplicate Originals**. This Agreement may be executed in one or more counterparts, each of which will be

deemed to be an original copy of this Agreement, and all of which, when taken together, shall be deemed to constitute one and the same agreement. The exchange of copies of this Agreement and of signature pages by electronic transmission shall constitute effective execution and delivery of this Agreement as to the parties and may be used in lieu of the original Agreement for all purposes. Signatures of the parties transmitted or executed electronically shall be deemed to be their original signatures for any purpose whatsoever.

The parties are signing this Agreement on the dates indicated below.

STANDARD INSURANCE COMPANY	TARRANT COUNTY
By: _____	By: _____
Name: _____	Name: _____
Title: _____	Title: _____
Date: _____	Date: _____

MAST09 (4/29/09)

EXHIBIT 1
TITLE VI ASSURANCES AND COMPLIANCE

A. ASSURANCES

During the performance of this Agreement, Standard Insurance Company, an Oregon corporation for itself, its assignees, and successors in interest (hereinafter referred to as the "Contractor") agrees, to the extent applicable to Contractor, as follows:

1. **Compliance with Regulations**: The Contractor (hereinafter includes consultants) will comply with the Acts and the Regulations relative to Nondiscrimination in Federally-assisted programs of the U.S. Department of Transportation, the Federal Highway Administration, as they may be amended from time to time, which are herein incorporated by reference and made a part of this contract.

2. **Nondiscrimination**: The Contractor, with regard to the work performed by it during the Term of the Agreement, will not discriminate on the grounds of race, color, or national origin in the selection and retention of subcontractors, including procurements of materials and leases of equipment. The Contractor will not participate directly or indirectly in the discrimination prohibited by the Acts and the Regulations, including employment practices when the contract covers any activity, project, or program set forth in Appendix B of 49 CFR Part 21.

3. **Solicitations for Subcontracts, Including Procurements of Materials and Equipment**: In all solicitations, either by competitive bidding, or negotiation made by the Contractor for work to be performed under a subcontract, including procurements of materials, or leases of equipment, each potential subcontractor or supplier will be notified by the Contractor of the Contractor's obligations under this Agreement and the Acts and the Regulations relative to Nondiscrimination on the grounds of race, color, or national origin.

4. **Information and Reports**: The Contractor will provide all information and reports required by the Acts, the Regulations, and directives issued pursuant thereto and will permit access to its books, records, accounts, other sources of information, and its facilities as may be determined by the Recipient or the Federal Highway Administration to be pertinent to ascertain compliance with such Acts, Regulations, and instructions. Where any information required of a Contractor is in the exclusive possession of another who fails or refuses to furnish the information, the Contractor will so certify to the Recipient or the Federal Highway Administration, as appropriate, and will set forth what efforts it has made to obtain the information.

5. **Sanctions for Noncompliance**: In the event of a Contractor's noncompliance with the Nondiscrimination provisions of this Agreement, the Recipient will impose such contract sanctions as it or the Federal Highway Administration may determine to be appropriate, including, but not limited to:

    a. withholding payments to the Contractor under the Agreement until the Contractor complies; and/or

    b. canceling, terminating, or suspending the Agreement, in whole or in part.

6. **Incorporation of Provisions**: The Contractor will include provisions analogous to paragraphs one through six in every subcontract related to those laws referenced in paragraphs one through six that are applicable to the Contractor and the services performed under the Agreement.

Proprietary and Confidential Information of Claim Administrator
Not for use or disclosure outside Claim Administrator, Employer, their respective affiliated companies, and third-party representatives, except with written permission of Claim Administrator.

B. NONDISCRIMINATION AUTHORITIES

During the performance of this Agreement, the Contractor, for itself, its assignees, and successors in interest (hereinafter referred to as the "Contractor") agrees, to the extent applicable to Contractor and the services provided under the Agreement to comply with the following nondiscrimination statutes and authorities; including but not limited to:

Pertinent Nondiscrimination Authorities:

- Title VI of the Civil Rights Act of 1964 (42 U.S.C. § 2000d et seq., 78 stat. 252), (prohibits discrimination on the basis of race, color, national origin); and 49 CFR Part 21
- The Uniform Relocation Assistance and Real Property Acquisition Policies Act of 1970, (42 U.S.C. § 4601), (prohibits unfair treatment of persons displaced or whose property has been acquired because of Federal or Federal-aid programs and projects);
- Federal-Aid Highway Act of 1973, (23 U.S.C. § 324 et seq.), (prohibits discrimination on the basis of sex);
- Section 504 of the Rehabilitation Act of 1973, (29 U.S.C. § 794 et seq.), as amended, (prohibits discrimination on the basis of disability); and 49 CFR Part 27;
- The Age Discrimination Act of 1975, as amended, (42 U.S.C. § 6101 et seq.), (prohibits discrimination on the basis of age);
- Airport and Airway Improvement Act of 1982, (49 U.S.C. § 4 71, Section 4 7123), as amended, (prohibits discrimination based on race, creed, color, national origin, or sex);
- The Civil Rights Restoration Act of 1987, (PL 100-209), (Broadened the scope, coverage and applicability of Title VI of the Civil Rights Act of 1964, The Age Discrimination Act of 1975 and Section 504 of the Rehabilitation Act of 1973, by expanding the definition of the terms "programs or activities" to include all of the programs or activities of the Federal-aid recipients, sub recipients and contractors, whether such programs or activities are Federally funded or not);
- Titles II and III of the Americans with Disabilities Act, which prohibit discrimination on the basis of disability in the operation of public entities, public and private transportation systems, places of public accommodation, and certain testing entities (42 U.S.C. §§ 12131-12189) as implemented by Department of Transportation regulations at 49 C.F.R. parts 37 and 38;
- The Federal Aviation Administration's Nondiscrimination statute (49 U.S.C. § 47123) (prohibits discrimination on the basis of race, color, national origin, and sex);
- Executive Order 12898, Federal Actions to Address Environmental Justice in Minority Populations and Low-Income Populations, which ensures discrimination against minority populations by discouraging programs, policies, and activities with disproportionately high and adverse human health or environmental effects on minority and low-income populations;
- Executive Order 13166, Improving Access to Services for Persons with Limited English Proficiency, and resulting agency guidance, national origin discrimination includes discrimination because of limited English proficiency (LEP). To ensure compliance with Title VI, you must take reasonable steps to ensure that LEP persons have meaningful access to your programs (70 Fed. Reg. at 74087 to 74100);
- Title IX of the Education Amendments of 1972, as amended, which prohibits you from discriminating

Proprietary and Confidential Information of Claim Administrator
Not for use or disclosure outside Claim Administrator, Employer, their respective affiliated companies, and third-party representatives, except with written permission of Claim Administrator.

because of sex in education programs or activities (20 U .S.C. 1681 et seq).

C, REPRESENTATIONS/WARRANTIES

To the extent applicable to the services performed by the Contractor under this Agreement, the Contractor also makes the following representations and warranties to Tarrant County:

1. It has taken the steps necessary to effectuate Title VI requirements.

2. Disadvantaged business enterprises are afforded equal opportunity to submit bids/proposals as sub-contractors or sub-consultants and will not be discriminated against on the grounds of race, color, sex, age, disability, religion, veteran status, or national origin in consideration of a selection or award.

3. Neither Contractor or any subcontractors or sub-recipients that will participate in activities to be funded as a result of this contract/bid/solicitation, are listed on the debarred list due to violations of Title VI or VII of the Civil Rights Act of 1964, nor are any proposed Parties to this Addendum and Employer Agreement, or any subcontract resulting therefrom, aware of any pending action which might result in such debarment or disqualification.

D. TITLE VI COMPLAINTS

Any person who, based on race, religion, color, national origin, sex, age, or disability believes that he/she has been excluded from participation in, denied benefits or services of any program or activity administered by the County or its sub-recipients, consultants and contractors may bring forth a discrimination complaint under Title VI. Only complaints based on the complainant's protected status will be considered under Title VI. The complainant may file a signed, written complaint up to **180 calendar days** from the date of the alleged act of discrimination or the date the person(s) became aware of the alleged act(s) of discrimination. Complaints must be in writing and signed by the complainant and/or the complainant's representative. Complaints must be filed with the Tarrant County Human Resources Department at the following address:

Tarrant County, Human Resources
100 E. Weatherford
Suite 301
Fort Worth, TX 76196
(214) 653-7638 (phone)
(214) 653-7608 (fax)

A complainant may also contact the Federal Coordination and Compliance Office, Civil Rights Division at the Title VI Hotline: 888-TITLE-06 (888-848-5306) or send a letter to: U.S. Department of Justice Civil Rights Division Federal Coordination and Compliance Section, NWB 950 Pennsylvania Avenue, N.W. Washington, D.C. 20530. More information on Title VI is available from the Justice Department online at www.justice.gov.

Contractor shall comply with all reasonable requests made in the course of an investigation of Title VI and these assurances by Tarrant County, the Texas Department of Transportation, the US Department of Transportation, the US Department of Justice, or any other federal or state agency. Failure to comply with such reasonable requests will be deemed a breach of this contract/bid/solicitation.

E. ENFORCEMENT

The Contractor affirmatively acknowledges that it will be subject to Title VI in those circumstances when the Contractor is performing services under this Agreement that are subject to Title VI, and implementing regulations, and any enforcement measures therein. In addition to any enforcement action by the County,

Proprietary and Confidential Information of Claim Administrator
Not for use or disclosure outside Claim Administrator, Employer, their respective affiliated companies, and third-party representatives, except with written permission of Claim Administrator.

the Contractor acknowledges that the United States and the State of Texas has a right to seek judicial enforcement with regard to any matter arising under Title VI, including the assurances herein.

Contractor's Full Name:

_____

_____

Signature, Authorized Representative of Contractor **Date**

_____

Name and Title

Proprietary and Confidential Information of Claim Administrator
Not for use or disclosure outside Claim Administrator, Employer, their respective affiliated companies, and third-party representatives, except with written permission of Claim Administrator.

Request for Group Insurance Amendment

Standard Insurance Company
900 SW Fifth Avenue
Portland, OR 97204-1282

Employee Benefits Consultant: Lee Lane
Employee Benefits Service Representative: Alecia Patrick
Employee Benefits Sales and Service Office: Dallas

Policyholder: Tarrant County
Group Number: 631762

As an authorized representative of the Employer, I request that Standard Insurance Company ("The Standard") amend the above Employer's coverage under the Group Policy to make the following change(s):

Increase the Reasonable Accommodation Benefit to $25,000

The new LTD rate is: 0.120% of Predisability Earnings

The next renewal will be January 1, 2031

I request that the amendment become effective on 01/01/2026. I understand that the amendment will not become effective unless approved and issued by The Standard.

I request that the amendment be approved by The Standard subject to The Standard's usual underwriting requirements, including, if applicable, Evidence of Insurability or a Pre-existing Condition provision.

I understand that the amendment, if approved by The Standard, will be issued in the policy language customarily used by The Standard.

I understand that any increase in Insurance for a Member who is not Actively At Work all day on the Member's last regular work day before the scheduled effective date of the amendment will be deferred until the first day after the Member completes one full day of Active Work.

I request that the amendment, if approved and issued by The Standard, become effective by its terms without any further acceptance by the Employer, and that a copy of this Request for Group Insurance Amendment form be attached to and made a part of the amendment.

Sign Name: _____ Title: _____
Authorized Representative

Print Name: _____ Date: _____

Reset

STANDARD INSURANCE COMPANY
Employee Benefits - Underwriting
900 SW Fifth Ave. Portland, OR 97204-1282

Application for Group Insurance

Please type or print

REQUESTED EFFECTIVE DATE 01/01/2026

APPLICANT

Full Legal Name of Group (Exactly as it is to be shown in the policy.)
Tarrant County

Street Address 100 E. Weatherford #301

City Fort Worth State TX Zip Code 76196

Phone No. (817) 8841188 Fax No. (_____) _____ Email rheld@tarrantcountytx.gov

Group Contact Roxie Held Contact's Title Director of Human Resources

Contact's Phone No. if different (817) 8841510 Contact's Fax No. if different (_____) _____

Nature of Business Government

INSURANCE COVERAGE REQUESTED

☐ Life Only	☐ Supplemental Life	☐ Dental/Employees	☐ Eye Care	☑ Accident*	☐ _____
☑ Life and AD&D	☑ Additional/Optional Life	☐ Dental/Employees and Dep(s)	☐ LTD	☑ Critical Illness*	
☑ Dependent Life	☐ Stand Alone AD&D	☐ Dental/Orthodontia	☑ STD	☑ Hospital Indemnity*	
☐ Statutory (State & Product) _____					

**I understand and agree if Applicant utilizes an enrollment platform not directly supported by The Standard, that Applicant is required to and will timely present to each enrollee appropriate disclosures and any state mandated fraud notices which are contained on the supplied enrollment form.*

OTHER INSURANCE

A. Does this insurance supplement other insurance? ☐ Yes ☑ No
If yes, specify for each line of coverage and Insurance Carrier: _____

B. Does this insurance replace existing insurance? ☑ Yes ☐ No
If yes, specify for each existing line of coverage: Life/AD&D

- Please submit a copy of each in force policy, certificate or plan document.

Effective date of Prior Plan: _____ Termination date of Prior Plan: _____

ACTIVE WORK REQUIREMENT: A person must meet an Active Work requirement to become insured. Members who have not met an Active Work requirement are not insured until returning to work for one full day and meeting all other contractual requirements.

Initial: _____

Note: Some members who do not meet an Active Work requirement may be eligible for Waiver of Premium with a prior carrier.

APPLICANT AGREES THAT: **I hereby apply for Group Insurance as provided in the attached proposal.**

The above information is true and correct to the best of the Applicant's knowledge and belief. It forms the basis for this request for group insurance.

If the requested insurance is acceptable to Standard Insurance Company under its current rules and practices and is legally permissible, a Group Policy will be issued in the language customarily used by Standard. It will be effective on the date determined by Standard. No producer has the authority to guarantee the acceptability of the requested insurance.

Standard may issue separate Group Policies if more than one coverage is requested in this Application. The insurance, if approved, will be subject to Standard Insurance Company's usual underwriting requirements, including the exclusions and limitations in the Group Policy and, if applicable, Evidence Of Insurability. The effective date of insurance for which a person is required to submit satisfactory Evidence Of Insurability will be determined in accordance with the terms of the Group Policy, subject to the Active Work requirement. No premiums will be collected or paid by the Applicant for such insurance until notification of approval.

No material describing coverage under the Group Policy will be distributed by the Applicant to any person to be insured without the prior written consent of Standard Insurance Company.

Premium rate quotations were based on data submitted to Standard. Final premium rates will be determined by the actual composition of the group.

The consideration for any Group Policy which may be issued is this Application and the payment of premiums. Payment of premium after receipt of the Group Policy is acceptance of the terms of the Group Policy.

This Application is made a part of the Group Policy.

Applicant authorizes the producer, broker of record, or consultant to receive information regarding the applicant's claims status and experience that the applicant has a right to receive and which is reasonably necessary to assist the applicant in conducting a review of the information.

_____
Signature and Title of Applicant's Authorized Representative

_____
Date

(Must be signed or submitted prior to the requested effective date.)

Initial Deposit $ _____

STANDARD INSURANCE COMPANY
Employee Benefits - Underwriting
900 SW Fifth Ave. Portland, OR 97204-1282

Receipt for Initial Deposit

Received from_____ , an initial deposit of $ _____* in connection with the Application for Group Insurance bearing the same date as this conditional receipt.

Date _____

This receipt is subject to the terms and conditions below.

Received By

_____ _____
Name Title

*All premium checks must be made payable to Standard Insurance Company.
Do not make check payable to the producer or leave payee blank.

Terms of Receipt (Please read carefully.)

If the requested insurance is acceptable to Standard Insurance Company under its current rules and practices and is legally permissible, a Group Policy will be issued in the language customarily used by Standard. It will be effective on the date determined by Standard. No producer has the authority to guarantee the acceptability of the requested insurance.

Standard may issue separate Group Policies if more than one coverage is requested in this Application. The insurance, if approved, will be subject to Standard Insurance Company's usual underwriting requirements, including the exclusions and limitations in the Group Policy and, if applicable, Evidence Of Insurability. The effective date of insurance for which a person is required to submit satisfactory Evidence Of Insurability will be determined in accordance with the terms of the Group Policy, subject to the Active Work requirement. No premiums will be collected or paid by the Applicant for such insurance until notification of approval.

No material describing coverage under the Group Policy will be distributed by the Applicant to any person to be insured without the prior written consent of Standard insurance Company

Premium rate quotations were based on data submitted to Standard. Final premium rates will be determined by the actual composition of the group.

The consideration for any Group Policy which may be issued is this Application and the payment of premiums. Payment of premium after receipt of the Group Policy is acceptance of the terms of the Group Policy.

This Application is made a part of The Group Policy.

Print

Reset

TheStandard®

Standard Insurance Company

STD FICA & W2 Tax Reporting Service Agreement

Short Term Disability (STD) – Group Policy No.: 631762

☐ **Option 1:** Policyholder is responsible for Employer FICA and Medicare Taxes and for W2 Tax Reporting of STD benefits.

_____ (Policyholder) understands that Standard Insurance Company (The Standard) WILL NOT pay or remit Employer FICA/Medicare Taxes or perform W2 tax reporting services with respect to the STD benefits through the Policy identified above.

☑ **Option 2:** Standard Insurance Company (The Standard) agrees to be responsible for Employer FICA and Medicare Tax and remittance and for W2 tax reporting services.

The County of Tarrant (Policyholder) requests that Standard Insurance Company (The Standard) provide certain tax services with respect to the STD benefits through the Policy identified above and The Standard will receive certain fees for the respective tax services.

Policyholder understands and agrees to the following:

a) **Taxable Benefits:** The Standard will pay the Employer's matching share of the STD benefit Social Security and Medicare Taxes and prepare and distribute Form W-2 tax statements reporting STD benefit information as required. As a fee for this service, the Policyholder's STD premium rate will be increased for this service. This fee will be included in Policyholder's STD premium rate.

Nontaxable Benefits: The Standard will prepare and distribute Form W-2 tax statements reporting STD benefit information as required. As a fee for this service, the Policyholder's STD premium rate will be increased for this service. This fee will be included in Policyholder's STD premium rate. **Note changes in taxation and tax service fee:** If the Policy is amended and if premium contributions change and STD benefits become taxable (premiums paid with pre-tax dollars, employer paid premiums, etc.), the Service Agreement fee automatically increases to reflect the taxable benefit rate. The increase in the service fee is effective as of the date the premium payment arrangement changes.

b) The Standard does not assume responsibility for paying or reporting Federal Unemployment (FUTA) Tax, State Unemployment (SUTA) Tax, or any other payroll taxes associated with the STD benefits under the Policy.

c) The Policyholder/Employer is still responsible for reviewing and immediately notifying The Standard of errors on the reports sent to them (e.g., claimant's name, partial or complete social security number, employer contribution %, etc.) so that government reporting and tax statement information will be correct.

d) This Service Agreement will remain in effect until the end of the calendar year. The service will renew automatically for each calendar year thereafter, unless terminated. Either party may terminate this Service Agreement at the end of the calendar year as applicable to January 1 of the following calendar year.

Effective Date of this Agreement

New STD Policyholders: The completed Service Agreement must be received by The Standard as part of the new group/coverage application process, and prior to incurring any claims under the Policyholder's STD Policy. This Agreement becomes effective on the effective date of the new STD Policy. The effective date of the Policy is 1/1/2026.

Existing STD Policyholders: The completed Service Agreement becomes effective January 1 following the date The Standard receives the Agreement. The effective date of the Agreement is _____.

In executing this Service Agreement I acknowledge and represent that I am an authorized representative of Policyholder with authority to execute this Service Agreement.

_____ Policyholder's Representative's Name

_____ Policyholder's Representative's Title

_____ Policyholder's Representative's Signature

_____ Date

Copies to: Contract File, Shared Services Financial Services, and Policyholder

Print

TARRANT COUNTY
COMMISSIONERS COURT COMMUNICATION

Court Date: December 9, 2025	**Court Order #:**	**Page:** 1 of 1
Department: Human Resources	**Prepared By:** Jennifer Jones	**Approved By:** Roxie Held

SUBJECT:

Consideration to Authorize the Reassignment of Certain Chapter 54 Magistrate(s) to Chapter 54A Criminal Associate Judge(s)

***** CONSENT AGENDA *****

COMMISSIONERS COURT ACTION REQUESTED:

It is requested that the Commissioners Court consider authorizing the Tarrant County Judges Trying Criminal Cases to reassign certain Chapter 54 Magistrate(s) to Chapter 54A Criminal Associate Judge(s).

BACKGROUND

Recent legislative changes in Senate Bill (SB) 9, including bail reform, have created operational challenges which require additional judicial authority to ensure timely processing of cases and continuity of court operations.

If approved, the authorized changes will be reflected in the personnel agenda as positions are transitioned.

FISCAL IMPACT

There is no additional fiscal impact with this authorization, as certain Chapter 54 Magistrate(s) will be transitioned into Chapter 54A Criminal Associate Judge(s).

TARRANT COUNTY
COMMISSIONERS COURT COMMUNICATION

Department: Human Resources **Prepared By:** Jennifer Jones **Approved By:** Roxie Held

SUBJECT:

Consideration of a Master Worksite Training Employer Agreement with Workforce Solutions for Tarrant County to Support Intern Onboarding Through the Work Experience Program

***** CONSENT AGENDA *****

COMMISSIONERS COURT ACTION REQUESTED

It is requested that the Commissioners Court consider a Master Worksite Training Employer Agreement between Tarrant County and Workforce Solutions for Tarrant County (Workforce Solutions) to support the onboarding of interns through the Work Experience/Subsidized Employment/Transitional Jobs Program (Work Experience Program).

BACKGROUND

Workforce Solutions is a regional workforce development organization that connects employers with qualified job seekers. Through its Work Experience Program, the organization provides individuals aged 18 and older with subsidized employment opportunities designed to build job skills and improve long-term employability.

If approved, the proposed partnership would allow Tarrant County departments to serve as work experience sites, offering structured, temporary internships to eligible participants. Workforce Solutions will provide orientation, supervision support, wage subsidies, and liability coverage for participants. Tarrant County will provide meaningful work assignments, mentorship, and supervision in accordance with program guidelines.

The District Attorney's Office has reviewed this Agreement as to form.

FISCAL IMPACT

There is no direct fiscal impact to Tarrant County. Wages for participants in the Work Experience Program will be fully subsidized by Workforce Solutions for Tarrant County. Any hours worked beyond the authorized schedule will be the responsibility of the County department.

Attachments

Workforce Solutions Contract 2025.pdf

WORKFORCE SOLUTIONS FOR TARRANT COUNTY
A proud partner of the AmericanJobCenter network

MASTER WORKSITE TRAINING EMPLOYER AGREEMENT

This agreement is entered into and between Workforce Solutions for Tarrant County (Agent) and the undersigned Work Site Training Employer. The purpose of this agreement is to provide a statement of responsibilities for each of the parties to this agreement:

Work Site Issuing Office:

Tarrant-County Of			
Name of Employer			
100 E. Weatherford Street, Suite 301	Fort Worth	TX	76196
Street Address	**City**	**State**	**Zip Code**
Various Tarrant County Departments and Buildings	Fort Worth	TX	76196
Actual Worksite Address	**City**	**State**	**Zip Code**
Tim O'Hare	County Judge		12/09/2025
Employer Representative Name	**Title**		**Date**

12/09/2025

Effective date of Contract: ----------

Assigned Work Experience Site Supervisor's Name: To be assigned by host departments based on placement

Assigned Work Experience Site Contact Number: 817-884-1188

Assigned Work Experience Site Contact E-mail: Humanresources@tarrantcountytx.gov

This agreement is made between **Workforce Solutions for Tarrant County authorized agent,** and Tarrant County; hereafter, referred to as "work experience site", for Work Experience/ Subsidized Employment/Transitional Jobs participation under the Workforce Investment & Opportunity Act & Personal Responsibility Act and/or the TANF Emergency Contingency Fund.

An equal opportunity employer/program. Auxiliary aids and services are available, upon request, to individuals with disabilities. (TDD/TTY) 1-800-RELAYTX

Purpose of the Program

The purpose of the Workforce Solutions for Tarrant County Work Experience/Subsidized Employment/Transitional Jobs activity/Volunteer activities is to provide opportunities to customers with limited or no work experience and effective comprehensive services that improve leadership abilities and provide customers with exposure to the world of work, these services will improve employability of customers to ensure self-sufficiency is achieved.
This program serves Youth (ages 16 to 24) and Adults (ages 18 and older). Any wages earned are paid by Workforce Solutions for Tarrant County. The work experience site is not required to retain the customer upon completion of the program, but employment opportunities are encouraged.

Work Experience Site Conditions and Requirements

The following responsibilities are made a part of this agreement.
1. Work Experience Site's assigned supervisor(s)/mentor (s) must go through a supervisor's/mentor's orientation prior to any placement.
2. Submit a written job description/expected performance (will become part of agreement) prior to any placement.
3. Provide supervision (and if required), safety training, supplies and equipment to perform the work.
4. Accurately report work hours using the Youth/Adult Work Experience Payroll Timesheet.
5. Evaluate each customer's performance.
6. Contact Workforce Solutions for Tarrant County's contact person when customer or training related problems occur.
7. Notify Workforce Solutions for Tarrant County if or when a change in supervision occurs.
8. A Work Experience Site:
    - May not displace a current employee to replace with a Work Experience/Subsidized Employment/Transitional Jobs customer (including partial displacement such as reduction in the hours or overtime work, wages, or employment benefits).
    - May not assign customers to perform work that: a.) engages in political patronage, lobbying or other political activities; b.) are of a religious or anti-religious organization; or c.) partake in any tasks not allowed under Child Labor Laws.
    - Must comply with the Non-Traditional Employment Act of 1991.
    - May not compromise existing contracts for services or collective bargaining agreement, and the Work Experience/Subsidized Employment/Transitional Jobs customer may not be inconsistent with the terms of any collective bargaining agreement without the written concurrence of the labor organization.
    - Shall not use a customer to fill a job opening (1) when another individual is on layoff from the same or substantially equivalent job, or (2) when the work experience site has terminated the employment of any regular employee or otherwise reduced its workforce with the intention of filling the vacancy so created by utilizing Work Experience/Subsidized Employment/Transitional Jobs whose wages are subsidized at current minimum wage level
    - No work experience site officer or employee will allow the placement of a member of his/her immediate family under his/her supervision. Immediate family includes: wife, husband, mother, father, brother, sister, son, daughter, brother-in-law, sister-in-law, aunt, uncle, cousin, nephew, niece, step-parent or step-child.
    - May not create jobs for customer in a promotional line that will infringe in any way upon the promotional opportunities of currently employed individuals.
    - A Work Experience/Subsidized Employment/Transitional Jobs customer will not be denied training or other job opportunities and benefits because of race, color, sex, national origin, disability, political affiliation or beliefs, or age.
    - Shall comply with the Americans with Disabilities Act (ADA), and the Drug Free Work Place Act.
    - A Work Experience/Subsidized Employment/Transitional Jobs customer shall not participate in activities that occur in a casino or other gambling establishments, aquarium, zoo, golf course, or swimming pool.

Workforce Solutions for Tarrant County's Responsibilities

Workforce Solutions for Tarrant County will:

1 Agent will provide group or individual orientation to the Employer's Direct Supervisor/Mentor and the Alternate Supervisor/Mentor, prior to the assignment of a Trainee to a work site. Such orientation will include the objectives of the program, supervisory responsibilities, training responsibilities, record keeping and DOL regulations.

2. Agent will use the Trainee's component enrollment and objective assessment results to assist with the Trainee's assignment to a work site training slot.
3. Agent will assign a single point of contact that will assist the Employer with the identification and resolution of training issues and any questions/concerns.
4. Agent will monitor work sites for compliance with all objectives of the program, supervisor responsibilities, training responsibilities, record keeping, and DOL regulations including Child Labor Laws when applicable.
5. Agent will pay all Subsidized Trainee wages for the scheduled work hours as stated on the Placement Authorization Form (provided by the participant) and in accordance with current Federal Minimum Wage Regulations for any paid Work Experience opportunities. Unpaid opportunities will be available for those who need a volunteer opportunity and will result in no wages. Please note any hours and/or days above what is indicated will be the sole responsibility of the employer.
6. Agent will maintain a current Worker's Compensation Policy for all Trainees (copy of report provided in Supervisor Handbook).
7. Agent may provide, at no cost to the Employer, all safety equipment required for the Training contingent upon funding.

Termination of Customer

Customer(s) must adhere to Work Experience Site's personnel policies. A work experience site can request that a customer be terminated, for just cause, at any time. Workforce Solutions for Tarrant County is available at all times should problems arise and will attempt to resolve the problem to the worksite's satisfaction.

Accidents (Liability Insurance)

Workforce Solutions for Tarrant County covers the customer's worker's liability insurance in the event an accident occurs on the work experience site. In case of an accident, the worksite must ensure medical services are rendered immediately and notify emergency contact persons. Worksite must also notify Workforce Solutions for Tarrant County and Unique HR Risk Management Department (800) 824-8367 within 24 hrs of any accident. After hours or on weekends, call (361) 877-3357.

Customer Evaluations

Workforce Solutions for Tarrant County and work experience site supervisor/mentor will conduct a joint evaluation of customer's performance every ninety days while enrolled in the program.

PROCEDURES FOR EVALUATION:

1. The same supervisor/mentor must evaluate the customer throughout the work experience period, unless a change in supervisor/mentor occurs and is documented.
2. Customer must remain performing the same work throughout the evaluation period.
3. A final evaluation must be completed for each participant at the conclusion of their employment experience.

Monitoring Activities

Workforce Solutions for Tarrant County will monitor worksite for:
1. Procedures and/or controls to record and maintain accurate time and attendance records.
2. Completed evaluations.
3. General work conditions (safety, sanitary, etc.).
4. Supervisor/mentor to customer ratio (if applicable) and presence of supervision.
5. Status of worksite as an equal employment opportunity employer, and compliance with ADA.

Customer Compensation

1. Workforce Solutions for Tarrant County does not pay overtime nor holiday hours for customers.
2. Customers will be compensated in accordance with the Fair Labor Standards Act.
3. Worksite will be participating in (select all that apply):

☐ Paid Work Experience ☐ Unpaid Work Experience

Other

1. All forms incorporated herein by reference shall be construed as part of this agreement.
2. Workforce Solutions for Tarrant County reserves the right to remove customers from the worksite(s) if any EEOC violations occur.
3. Any hours and/or days above what is indicated in the Placement Authorization Form, will be the sole responsibility of the employer._____
(Initials)

Termination of Agreement

This agreement is in effect, when the signatures of duly authorized representatives of the Work Experience Site Provider and Workforce Solutions for Tarrant County are affixed, and shall be in force until terminated in writing by either party.

_____	Tim O'Hare
Work Experience Site Authorized Signature	Work Experience Site Authorized Representative (Print Name)
Tarrant County Judge	12/09/2025
Title	Date
_____	_____
Workforce Solutions for Tarrant County Authorized Signature	Authorized Representative (Print Name/)
_____	_____
Title	Date
_____	_____
Deputy Director of Business Solutions Signature	Authorized Representative (Print Name)
_____	_____
Title	Date

An equal opportunity employer/program. Auxiliary aids and services are available, upon request, to individuals with disabilities. (TDD/TTY) 1-800-RELAYTX

TARRANT COUNTY
COMMISSIONERS COURT COMMUNICATION

Court Date: December 9, 2025	**Court Order #:**	**Page:** 1 of 1
Department: Human Resources	**Prepared By:** Glorimar Lugo Ortiz	**Approved By:** Roxie Held

SUBJECT:

Receive and File the Personnel Agenda

***** CONSENT AGENDA *****

See Attachment for Additional Information

TARRANT COUNTY
COMMISSIONERS COURT COMMUNICATION

Court Date: December 9, 2025 **Court Order #:** **Page:** 1 of

Department: Information Technology **Prepared By:** Bethany Sanchez Vazquez **Approved By:** Andre Mendes

SUBJECT:

Consideration of an Agreement between Tarrant County and Tyler Technologies to Implement a Secure Positive Pay Process in the Jury Manager System

*****CONSENT AGENDA *****

COMMISSIONERS COURT ACTION REQUESTED

It is requested that the Commissioners Court consider approving the Professional Services Agreement ("API Agreement") to create an Application Programming Interface (API) solution for the Tarrant County Jury Enterprise Manager System to retrieve positive pay data and mark payments as sent.

BACKGROUND

On October 14, 2025, the Commissioners Court, through Court Order #146120, approved the sole source designation with Tyler Technologies, Inc. for the Enterprise Jury Manager Products and Services..

On November 12, 2024, the Commissioners Court, through Court Order #144158, approved the Jury Management System Upgrade Agreement ("Cloud Agreement"), effective November 15, 2024. This Agreement transitioned the current on-premise infrastructure to a more advanced, fully supported, and modernized cloud-based solution.

Positive pay is fraud prevention the bank uses to match checks issued by the county with those presented for payment. If discrepancies are found, the bank alerts the county to approve or reject the transaction.

The Cloud Agreement with Tyler Technologies supports positive pay, but professional services are required to set up the API process. The API process replaces a temporary webservice and provides structured data exchange between Tyler Technologies, Tarrant County, and JPMorgan Chase Bank enforcing security protocols like authentication, authorization, and encryption, helping protect data and services.

This API Agreement has been approved as to form by the Criminal District Attorney's Office.

FISCAL IMPACT

Funding of $20,000 is available in account 45400-2026 Capital Improvement Fund/1810410000 IT Application Development & Support/540000 Capital. There are no ongoing costs associated with positive pay.

PASSED AND APPROVED on December 9, 2025.

COUNTY OF TARRANT
STATE OF TEXAS

By: Separate Electronic Signature Page
Tim O'Hare
County Judge

APPROVED AS TO FORM:

_____
District Attorney's Office*

*By law, the District Attorney's Office may only approve contracts for its clients. We reviewed this document as to form from our client's legal perspective. Other parties may not rely on this approval. Instead, those parties should seek contract review from independent counsel.

Attachments

Services Agreement - signed.pdf

Professional Services Agreement

This Professional Services Agreement (this "Agreement") is made and entered into by and between Tyler Technologies, Inc., a Delaware corporation ("Tyler"), and Tarrant County, TX (the "Client") as of the last date written below (the "Effective Date").

Background

WHEREAS, Client is a current customer of Tyler and a user of Tyler's proprietary software; and

WHEREAS, Client desires to engage Tyler to provide certain professional services related thereto, all on the terms and conditions set forth in this Agreement.

NOW, THEREFORE, in consideration of the mutual promises contained herein, along with other good and valuable consideration, the receipt and sufficiency of which all parties mutually acknowledge, Tyler and the Client agree as follows:

A. Tyler shall furnish the services described in this Agreement, and Client shall pay the prices set forth in this Agreement.

B. This Agreement consists of this cover and signature page and the following attachments and exhibits attached hereto and to be attached throughout the Term of this Agreement, all of which are incorporated by reference herein: (1) Schedule 1; and (2) Terms and Conditions.

Schedule 1

SCHEDULE 1 - DESCRIPTION OF SERVICES	TOTAL CONTRACT AMOUNT
Enterprise Jury Manager - Create API Endpoint for Tarrant to retrieve positive pay data. *See Appendix A.* *Project requirements will be detailed in the Project Design Document (PDD).* *PDD will be provided for client approval when work begins in Q1 2026.*	**$20,000.00**

IN WITNESS WHEREOF, this Agreement has been executed by a duly authorized officer of each Party hereto. Tyler agrees that Client shall execute this Agreement by electronic signatures on separate signature pages. Such electronic signatures shall be deemed to have the same legal effect as original handwritten signatures and shall be binding upon Client as of the date of execution. The separately signed electronic signature pages will be attached to this Agreement and shall be considered an integral part of the Agreement.

TYLER TECHNOLOGIES, INC.

By: Rachel Mehlsak

Name: Rachel Mehlsak

Title: Senior Corporate Attorney

Date: 11/20/25

Appendix A.

Tyler Technologies Positive Pay API Endpoint Proposal

Overview

This proposal outlines the Application Programming Interface (API) solution for Tarrant Country to securely:

1. Retrieve positive pay information
2. Mark payments as sent to positive pay

Responsibilities

Tyler Technologies Will Provide

- API Development & Maintenance - Design, develop, and maintain all Positive Pay API endpoints
- Security Implementation - Implement OAuth 2.0 authentication and data encryption protocols
- Documentation & Support - Provide comprehensive API documentation and ongoing technical support
- System Monitoring - Monitor API performance and availability
- Version Management - Manage API updates and maintain backward compatibility

Tarrant County Will Provide

- Client Integration - Develop client applications to consume the API services
- Credential Management - Securely manage API authentication credentials
- Data Compliance - Ensure data sent meets API format requirements and internal policies
- Testing & Validation - Conduct integration testing in testing environments
- Usage Monitoring - Monitor client applications that leverage the JuryClientAPI endpoints

---

API Functionality

Core Endpoints

1. Authentication Service
   - OAuth 2.0 token-based authentication
   - Secure credential validation
   - Session management with configurable token expiration
2. Information Retrieval
   - Query positive pay records by parameters, for example, account, date range, or status
3. Transaction Processing
   - Mark processed records as sent to Positive Pay

Technical Requirements

Communication Standards

- Protocol: HTTPS with TLS 1.2+ encryption
- Data Format: JSON request/response format
- Authentication: OAuth 2.0 Client Credentials flow

Appendix A continued.

Implementation Approach

Development Phases

Phase 1: Foundation

- API endpoint design

Phase 2: Core Development

- Endpoint development and testing
- Integration testing with Tarrant County systems

Phase 3: Deployment

- Production deployment
- User training and documentation delivery
- Go-live support and monitoring

Support Structure

- Technical Support: Dedicated support team during business hours
- Documentation: Comprehensive API guides
- Maintenance: Regular updates and 24/7 API monitoring

Tarrant County & Enterprise Jury Manager Positive Pay API Sample Flow Diagram

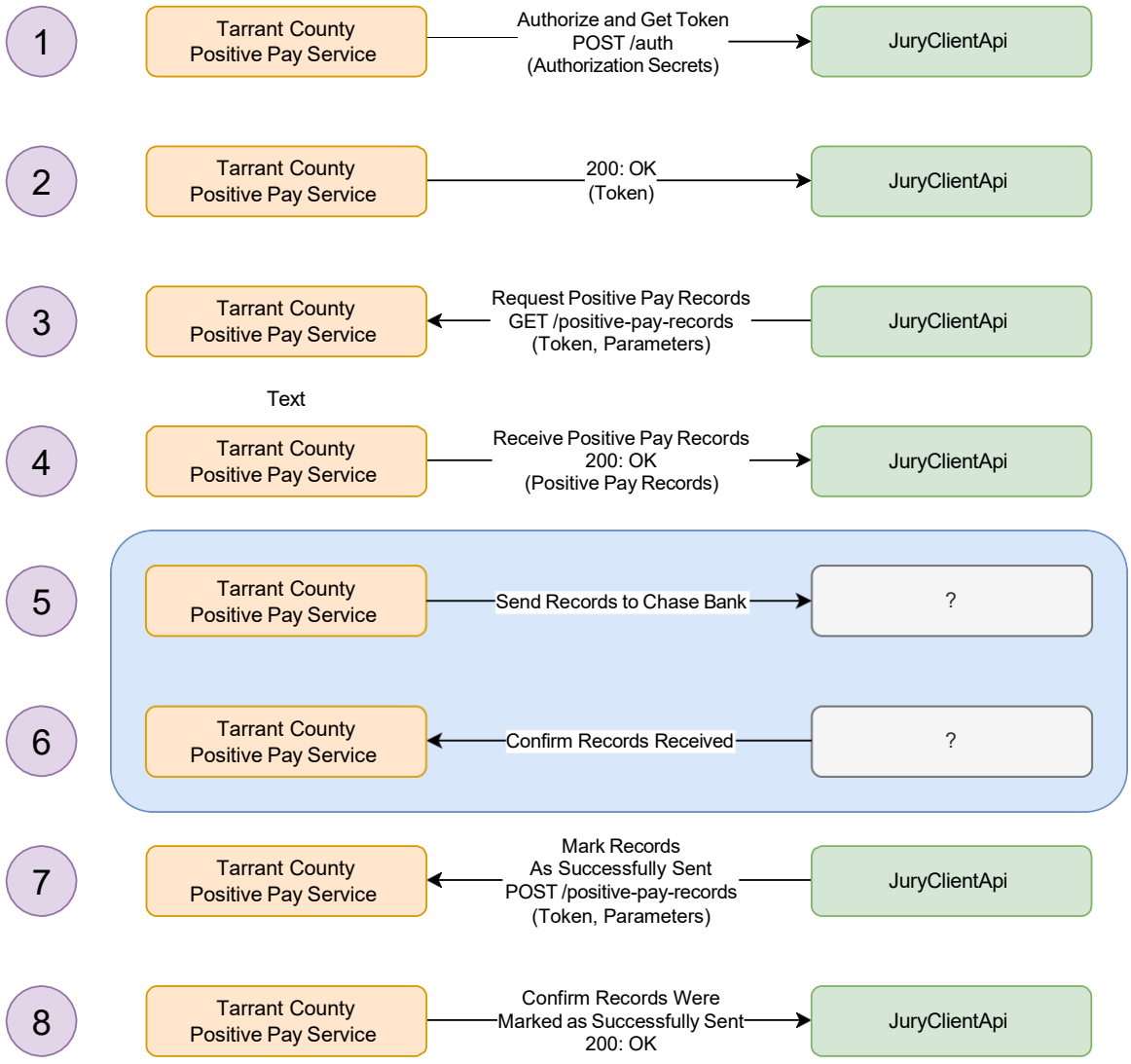

Notes:

All communication between the JuryClientApi are in JSON

Interface between Tarrant County and Chase Bank is conceptual.
Tarrant County is responsible for building and maintaining the integration with Chase Bank

Professional Services Agreement Terms and Conditions

1. Services. Tyler shall perform the services set forth in Schedule 1.

2. Compensation. Tyler shall perform its services hereunder for the fixed fee specified in Schedule 1. and invoiced. Tyler shall invoice the Client based on the following three (3) milestones. Any agreed upon contingency % determined for each milestone may be invoiced separately pending approved (AO) Change Order recognizing approved change in scope and/or schedule impacting cost to be allocated. Invoice shall be due and payable within thirty (30) days.

a) 10% - upon Tarrant County acceptance of the Project Design Document (PDD).
b) 60% - upon Tarrant County acceptance of software package or revision.
c) 30% - upon Tarrant County User Acceptance Testing (no Service Level 1 or Service Level 2 Defects as defined in Tyler's standard Maintenance and Support Services Agreement). User testing shall be completed within ninety (90) business days of software being installed in a hosted non-production environment accessible to the Client.

The following may result in additional project scope to be funded by the Client: (i) Failure of the Client to complete user acceptance testing within 90 business days of software being installed in a hosted non-production environment; or (ii) Changes in the Clients business requirements after approval of this Authorization Order that result in Tyler changing its solution approach.

Parties shall use a formalized change request to provide flexibility during development iterations and to manage the scope of the project which may include, but is not limited to, requests for additional development (prevailing rates are the published hourly rates TYLER charges at the time of any change request. Tyler will not begin any work without formal approval from the Client. Current rates are $200/hour – minimum work of 2 hours for any custom report or letter design change, system code change or other customization not part of standard project). Tyler and the Client to follow established project approval and payment process. Tyler prefers to receive payments electronically. Tyler's electronic payment information is as follows:

Bank: Wells Fargo Bank, N.A.
420 Montgomery
San Francisco, CA 94104
ABA: 121000248
Account: 4124302472
Beneficiary: Tyler Technologies Inc. – Operating

3. Termination. The Client may terminate this Agreement at any time by delivering a written notice of its intent to terminate to Tyler; provided, however, that the Client must pay Tyler for all costs and expenses incurred under this Agreement prior to the date of termination. Tyler may terminate this Agreement if the Client fails to pay any invoice when due or if the Client breaches any of its other obligations hereunder. Upon termination for any reason, each party shall immediately return all documentation, confidential information, and other information disclosed or otherwise delivered to the other party prior to such termination.

4. Confidentiality. Subject to the requirements of the limitations stated in Section 19 below, all documents and other materials produced under this Agreement shall be deemed to be "confidential information" and the receiving party shall not disclose, use, or reproduce, or authorize any third party to disclose, use, or reproduce, any such confidential information, without the prior written approval of the disclosing party; provided, however, that the receiving party may disclose such confidential information to its employees and representatives of the receiving party as may be required to perform its obligations under this Agreement and, provided further, that the receiving party informs such persons of the existence of this confidentiality obligations and will be responsible for any breach of this such obligations by such persons. Notwithstanding anything in the foregoing to the contrary, the following shall not be deemed to be "confidential information": (i) information that is publicly known or becomes publicly known through no fault of the receiving party, (ii) information that is generally or readily obtainable by the public, or (iii) information that constitutes the general skills, knowledge, and experience acquired by either party before entering into this Agreement and thereafter. The receiving party may disclose confidential information to the extent required by applicable law, regulation, or legal process, provided it promptly notifies the disclosing party of such requirement if legally permitted to do so.

5. Warranty. Tyler warrants that it shall perform services in a professional, workmanlike manner, consistent with industry standards. In the event Tyler provides services that do not conform to this warranty, Tyler will re-perform the services at no additional cost to Client.

6. Limitation of Liability.

THE LIABILITY OF TYLER FOR DAMAGES ARISING OUT OF OR IN CONNECTION WITH THIS AGREEMENT, WHETHER BASED ON A THEORY OF CONTRACT OR TORT, INCLUDING NEGLIGENCE AND STRICT LIABILITY, SHALL BE LIMITED TO TOTAL FEES PAID TO TYLER UNDER THIS AGREEMENT.

IN NO EVENT SHALL EITHER PARTY BE LIABLE FOR INCIDENTAL, CONSEQUENTIAL, OR SPECIAL DAMAGES OF ANY KIND, INCLUDING, WITHOUT LIMITATION, LOST REVENUES OR PROFITS, OR LOSS OF BUSINESS OR LOSS OF DATA ARISING OUT OF THIS AGREEMENT, IRRESPECTIVE OF WHETHER THE PARTIES HAVE ADVANCE NOTICE OF THE POSSIBILITY OF SUCH DAMAGE.

THE FOREGOING LIMITATIONS OF LIABILITY SET FORTH IN THIS SECTION 6 SHALL NOT APPLY WITH RESPECT TO: (A) DAMAGES OCCASIONED BY THE FRAUD, GROSS NEGLIGENCE, OR WILLFUL MISCONDUCTOF EITHER PARTY; (B) DAMAGES OCCASIONED BY VIOLATION OF LAW.

7. Force Majeure. Neither party shall be liable for delays in performing its obligations under this Agreement to the extent that the delay is caused by Force Majeure. "Force Majeure" is defined as an event beyond the reasonable control of a party, including governmental action, war, riot or civil commotion, fire, natural disaster, labor disputes, restraints affecting shipping or credit, delay of carriers, inadequate supply of suitable materials or any other cause which could not with reasonable diligence be foreseen, controlled or prevented by the party.

8. Insurance. Upon written request, Tyler shall provide Client with certificates of insurance evidencing the following insurance coverage:
a) Commercial general liability of at least $1,000,000;
b) Automobile liability of at least $1,000,000;
c) Professional liability of at least $1,000,000; and
d) Workers compensation complying with statutory requirements.

9. Miscellaneous.

(a) Tax Exempt Status. Client is a governmental tax-exempt entity and shall not be responsible for any taxes for any services provided for herein, whether federal or state. The fees paid to Tyler pursuant to this Agreement are inclusive of any applicable sales, use, personal property, or other taxes attributable to periods on or after the Effective Date of this Agreement.

(b) Assignment. Neither Tyler nor the Client shall, sell, transfer, assign, or otherwise dispose of any rights or obligations created by this Agreement without the written consent of the other party.

(c) Execution of Agreement. This Agreement may be executed in one or more counterparts, each of which shall be deemed an original of this agreement, and all of which, when taken together, shall be deemed to constitute one and the same agreement. The exchange of copies of this agreement and of signature pages by electronic transmission shall constitute effective execution and delivery of this agreement as to the parties and may be used in lieu of the original agreement for all purposes. Signatures of the parties transmitted or executed electronically shall be deemed to be their original signatures for any purpose whatsoever.

(d) Entire Agreement. This Agreement and the Schedules hereto constitute the entire understanding and contract between the Parties and supersedes any and all prior or contemporaneous oral or written representations or communications with respect to the subject matter hereof. The Exhibits to this Agreement are incorporated by reference herein.

(e) Amendment. This Agreement shall not be modified, amended, or in any way altered except by an instrument in writing signed by the properly delegated authority of each party. All amendments or modifications of this Agreement shall be binding upon the parties despite any lack of consideration.

(f) Relationship of Parties. The parties intend that the relationship between the parties created pursuant to or arising from this Agreement is that of an independent contractor only. Neither party shall be considered an agent, representative, or employee of the other party for any purpose.

(g) Governing Law. Any dispute arising out of or relating to this Agreement or the breach thereof shall be governed by the laws of the State of Texas, without regard to or application of choice of law rules or principles.

(h) No Third Party Beneficiaries. Nothing in this Agreement is intended to benefit, create any rights in, or otherwise vest any rights upon any third party.

(i) Equitable Relief. Each party covenants, represents, and warrants that any violation of this Agreement by such party with respect to its respective obligations set forth in Section 4 shall cause irreparable injury to the other party and shall entitle the other party to extraordinary and equitable relief by a Client of competent jurisdiction, including, without limitation, temporary restraining orders and preliminary and permanent injunctions, without the necessity of posting bond or security.

(j) Survival. The provisions of Sections 4 through 9 shall survive the expiration or termination of this Agreement.

(k) Texas Public Information Act. Client advises Tyler that Client is a governmental body under Chapter 552 of the Texas Government Code and that certain information that is collected, assembled, or maintained in connection with the transaction of official business by a governmental body is considered public information potentially subject to disclosure pursuant to a valid Texas Public Information Act ("TPIA") request. Tyler's trade secrets, certain financial information, and proprietary information may be subject to an exception to disclosure under Chapter 552 of the Texas Government Code, Subchapter C. If a TPIA request is made on Client to disclose Tyler information that may be subject to an exception from disclosure, Client will (i) promptly notify Tyler of such request for disclosure, and (ii) decline to release such information and file a written request with the Texas Attorney General's office seeking a determination as to whether such information may be withheld.

Services Agreement

Final Audit Report 2025-11-20

Created:	2025-11-20
By:	Michelle Weed (michelle.weed@tylertech.com)
Status:	Signed
Transaction ID:	CBJCHBCAABAAiSDGksjahW9-mda1HAgZ88fB6cc2WNuk

"Services Agreement" History

Document created by Michelle Weed (michelle.weed@tylertech.com)
2025-11-20 - 5:01:45 PM GMT

Document emailed to Rachel Mehlsak (rachel.mehlsak@tylertech.com) for signature
2025-11-20 - 5:01:49 PM GMT

Email viewed by Rachel Mehlsak (rachel.mehlsak@tylertech.com)
2025-11-20 - 6:33:26 PM GMT

Document e-signed by Rachel Mehlsak (rachel.mehlsak@tylertech.com)
Signature Date: 2025-11-20 - 6:33:36 PM GMT - Time Source: server

Agreement completed.
2025-11-20 - 6:33:36 PM GMT

TARRANT COUNTY
COMMISSIONERS COURT COMMUNICATION

Court Date: December 9, 2025	**Court Order #:**	**Page:** 1 of 48
Department: Public Health	**Prepared By:** Gary Collins, Contracts Specialist	**Approved By:** Dr. Brian Byrd

SUBJECT:

Consideration of a Provider Services Agreement with Molina HealthCare of Texas, Inc. for Reimbursement of Eligible Clinical Health Care Services Provided by Tarrant County Public Health

*****CONSENT AGENDA *****

COMMISSIONERS COURT ACTION REQUESTED

It is requested the Commissioners Court consider a Provider Services Agreement between Tarrant County and Molina HealthCare of Texas, Inc. to allow Tarrant County Public Health to enroll as a Molina provider, accept Molina insurance and receive reimbursement for eligible clinical health care services provided to clients covered by Molina Health plans.

BACKGROUND

TCPH provides clinical health care services to the residents of Tarrant County through various clinics and programs. To better serve patients and enhance billing options, TCPH continues to pursue enrollment and participation with both commercial and state health plans.

The proposed Provider Services Agreement with Molina Healthcare of Texas, Inc. will authorize TCPH to bill and receive reimbursement for clinical services provided to individuals insured by Molina, including Medicaid where applicable. This expands the insurance plans accepted by TCPH and supports continued access to care for clients covered by Molina.

The initial term of the agreement will begin January 1, 2026, for a period of one (1) year, and will automatically renew for successive one (1)-year terms unless either party provides at least ninety (90) days' written notice of intent not to renew.

The Criminal District Attorney's Office has reviewed and approved this agreement as to form.

FISCAL IMPACT

All associated reimbursements will be deposited in the T0400-2026 Public Health / 5100011000 Public Health / 428054 Health Private Ins.

PASSED AND APPROVED on December 9, 2025.

COUNTY OF TARRANT
STATE OF TEXAS

By: Separate Electronic Signature Page
Tim O'Hare
County Judge

APPROVED AS TO FORM:

_____
District Attorney's Office*

*By law, the District Attorney's Office may only approve contracts for its clients. We reviewed this document as to form from our client's legal perspective. Other parties may not rely on this approval. Instead, those parties should seek contract review from independent counsel.

Attachments

Molina Healthcare of Texas, Provider Services Agreement.pdf

MOLINA HEALTHCARE OF TEXAS, INC.
PROVIDER SERVICES AGREEMENT

SIGNATURE PAGE

In consideration of the promises and representations stated, the Parties agree as set forth in this Agreement. The Authorized Representative acknowledges, warrants, and represents that the Authorized Representative has the authority and authorization to act on behalf of its Party. The Authorized Representative further acknowledges and represents that he/she received and reviewed this Agreement in its entirety.

The Authorized Representative of Provider acknowledges the Provider Manual was available for review prior to entering into this Agreement and agrees that Provider will comply with the provisions set forth under the Provider Manual section and other applicable provisions related to the Provider Manual in the Agreement.

The Authorized Representative for each Party executes this Agreement with the intent to bind the Parties in accordance with this Agreement. **Provider Signature and Information.**

Provider's Legal Name ("Provider") – Matching the applicable tax form (i.e., W-9, Line 1): County of Tarrant dba Tarrant County Public Health	
Authorized Representative's Signature: SIGN HERE	Authorized Representative's Name – Printed: Tim O'Hare
Authorized Representative's Title: County Judge	Authorized Representative's Signature Date: DATE
Telephone Number: 817-884-1441	Fax Number – Official Correspondence:
Mailing Address – Official Correspondence: 100 E Weatherford St, Ste 506, Fort Worth, TX 76196	Payment Address – If different than Mailing Address:
IRS 1099 Address – If different than Mailing Address:	Tax ID Number – As listed on corresponding tax form: 75-6001170
NPI – That corresponds to the above Tax ID Number: 1194783183	Email Address – Official Correspondence:

Health Plan Signature and Information.

Molina Healthcare of Texas, Inc., a Texas Corporation ("Health Plan")	
Authorized Representative's Signature:	Authorized Representative's Name – Printed: Brandi McMillan
Authorized Representative's Title: VP, Network Strategy & Services	Authorized Representative's Countersignature Date:
Mailing Address – Official Correspondence: 2200 Hwy 21, Ste 270A, Bedford, TX 76021	Email Address – Official Correspondence: Mhtcontract@molinahealthcare.com
Effective Date of the Agreement ("Effective Date"):	

PROVIDER SERVICES AGREEMENT

Provider and Health Plan enter into this Agreement as of the Effective Date set forth on the Signature Page of this Agreement. The Provider and Health Plan each are referred to as a "Party" and collectively as the "Parties."

RECITALS

A. WHEREAS, Health Plan is a corporation licensed and approved by required governmental agencies to operate a health care service plan, including without limitation, to issue benefit agreements covering the provision of health care and related services and supplies in accordance with the law;

B. WHEREAS, Provider is approved by required governmental agencies to provide health care and related services and supplies and desires to provide services to eligible recipients in accordance with the law; and

C. WHEREAS, the Parties intend by entering into this Agreement that they will make health care and related services and supplies available to eligible recipients enrolled in various Products covered under this Agreement.

NOW, THEREFORE, in consideration of the promises and representations stated, the Parties agree as follows:

ARTICLE ONE – DEFINITIONS

1.1 Capitalized words or phrases in this Agreement have the meaning set forth below unless Health Plan is required to follow a different definition pursuant to a Law or a Government Program Requirement.

a. **Advance Directive** means a Member's written instructions, recognized under Law, relating to the provision of health care when the Member is not competent to make a health care decision as determined under Law.

b. **Affiliate** means an entity owned or controlled by Health Plan or Molina Healthcare, Inc.

c. **Agreement** means this Provider Services Agreement between Provider and Health Plan and all attachments, exhibits, addenda, amendments, and incorporated documents or materials.

d. **Appeals and Grievance Programs** mean the policies and procedures established by Health Plan to timely identify, process, and resolve Member and Provider appeals, grievances, complaints, disputes, or inquiries.

e. **Centers for Medicare and Medicaid Services ("CMS")** means the agency responsible for Medicare, and certain parts of Medicaid, CHIP, MMP, and the Health Insurance Marketplace.

f. **Claim** means a bill for Covered Services provided by Provider.

g. **Clean Claim** means a Claim for Covered Services submitted on an appropriate industry standard form, which has no defect, impropriety, lack of required substantiating documentation necessary to adjudicate the Claim, or particular circumstance requiring special treatment that prevents timely adjudication of the Claim.

h. **Covered Services** mean those health care and related services and supplies, including Emergency Services, provided to a Member that are Medically Necessary and are benefits of the Member's Product.

i. **Cultural Competency Plan** means a plan that ensures Members receive Covered Services in a manner that takes into account, but is not limited to, developmental disabilities, physical disabilities, differential abilities, cultural and ethnic backgrounds, and limited English proficiency.

j. **Date of Service** means the date on which Provider provides Covered Services or, for inpatient services, the date the Member is discharged.

k. **Downstream Entity** means any party that enters into a written arrangement, acceptable to CMS, with persons or entities involved with the Medicare Advantage, Medicaid, CHIP, or MMP Products below the level of the arrangement between Health Plan (or applicant) and Provider. These written arrangements continue down to the level of the ultimate provider for health and administrative services.

l. **Emergency Medical Condition** means a physical or behavioral condition manifesting itself by acute symptoms of sufficient severity (including severe pain) that a prudent layperson, who possesses an average knowledge of health and medicine, could reasonably expect the absence of immediate medical attention to result in any of the following: (i) placing the health of the individual (or, with respect to a pregnant woman, the health of the

woman or her unborn child) in serious jeopardy; (ii) serious impairment to bodily functions; or (iii) serious dysfunction of any bodily organ or part.

m. **Emergency Services** mean covered inpatient and outpatient services furnished by a provider who is qualified to furnish the services and the services are needed to evaluate or stabilize an Emergency Medical Condition.

n. **Encounter Data** means the information that is captured in a Clean Claim and the additional information required for compliance with Laws and Government Program Requirements.

o. **Government Contract** means the contract between Health Plan and a governmental agency for a Product.

p. **Government Program Requirements** mean the requirements of governmental agencies for a Product, which includes, but are not limited to, the requirements set forth in the Government Contract.

q. **Health and Human Services Commission ("HHSC")** means the agency within the State of Texas that is responsible for the oversight and administration of the Medicaid and CHIP programs.

r. **Health Insurance Marketplace** means those health insurance products/programs required by Title I of the Patient Protection and Affordable Care Act of 2010 (Pub. L. 111-148), as amended by the Health Care and Education Reconciliation Act of 2010 (Pub. L. 111-152), referred to collectively as the Affordable Care Act, including all implementing statutes and regulations.

s. **Health Plan** means Molina Healthcare of Texas, Inc., a Texas Corporation.

t. **Law** means, without limitation, federal, state, tribal, or local statutes, codes, orders, ordinances, and regulations applicable to this Agreement.

u. **Medicaid** means the joint federal-state program provided for under Title XIX of the Social Security Act, as amended.

v. **Medically Necessary or Medical Necessity** means health care services and related services and supplies that a healthcare provider, exercising prudent clinical judgment, would provide to a patient for the purpose of evaluating, diagnosing, or treating an illness, injury, disease, or its symptoms and that are: (i) in accordance with generally accepted standards of medical practice; (ii) appropriate for the symptoms, diagnosis, or treatment of the Member's condition, disease, illness or injury; (iii) not primarily for the convenience of the Member or health care provider; and (iv) not more costly than an alternative service, or site of services and at least as likely to produce equivalent results.

w. **Medicare Advantage ("MA")** means a program in which private health plans provide health care and related services and supplies through a Government Contract with CMS, which is authorized under Title XVIII of the Social Security Act, as amended (otherwise known as "Medicare"). Medicare Advantage also includes Medicare Advantage Special Needs Plans ("MA-SNP").

x. **Medicare-Medicaid Program ("MMP")** means a program in which private health plans provide health care and related services and supplies to beneficiaries eligible for both Medicaid and Medicare through a Government Contract with CMS and the state.

y. **Member** means a person enrolled in a Product and who is eligible to receive Covered Services.

z. **Molina Fee Schedule** means the Health Plan's fee schedule, inclusive of all reimbursement rates Health Plan is required to reimburse Provider within this Agreement. The Molina Fee Schedule is available upon request.

aa. **Molina Marketplace** means the products offered and sold by Health Plan under the requirements of the Health Insurance Marketplace.

bb. **Overpayment** means a payment Provider receives, which after applicable reconciliation, Provider is not entitled to receive or retain pursuant to Laws, Government Program Requirements, or this Agreement.

cc. **Participating Provider** means an individual or entity that is contracted with Health Plan to provide health care and related services and supplies to Members and, as applicable, is credentialed by Health Plan or Health Plan's designee.

dd. **Products** mean the health insurance programs identified on Attachment A, Products, in which Provider agrees to participate and which will include any successors to the health insurance programs.

ee. **Provider** means the entity or person identified on the Signature Page of this Agreement and includes any persons or entities as listed on Attachment H, Identification Sheet, performing Covered Services on behalf of the entity or person identified on the Signature Page of this Agreement. Provider will ensure all persons and entities performing Covered Services comply with the applicable terms of the Agreement. Each person or entity will be considered an "Individual Provider."

ff. **Provider Manual** means Health Plan's provider manuals, policies, procedures, documents, educational materials, and, as applicable, Supplemental Materials, setting forth Health Plan's requirements and rules that Provider is required to follow.

gg. **Quality Improvement Program ("QI Program")** means the policies and procedures, interventions, and systems, developed by Health Plan for monitoring, assessing, and improving the accessibility, quality, and continuity of care provided to Members.

hh. **Responsible Entity** means an entity, including, but not limited to, a capitated independent practice association or any entities that are capitated by Health Plan, which are financially responsible for certain Covered Services.

ii. **State Children's Health Insurance Program ("SCHIP" or "CHIP")** means the program established pursuant to Title XXI of the Social Security Act, as amended.

jj. **Subcontractor** means an individual or organization, including, but not limited to, a Downstream Entity, with which Provider contracts for the provision of Covered Services or administrative functions related to the performance of this Agreement. For the avoidance of doubt, a Subcontractor does not include Individual Providers.

kk. **Utilization Review and Management Program ("UM Program")** means the policies, procedures, and systems developed by Health Plan for evaluating and monitoring the Medical Necessity, appropriateness, efficacy, or efficiency of core health care benefits and services, including, but not limited to, procedures or settings and ambulatory review, prospective review, concurrent review, second opinions, care management, discharge planning, or retrospective reviews, including, but not limited to, under-utilization and over-utilization.

ARTICLE TWO – PROVIDER OBLIGATIONS

2.1 **Provider Standards.**

a. **Standard of Care.** Provider agrees to provide Covered Services within the scope of Provider's business. Provider will ensure all services and interactions with Members are at a level of care and competence that equals or exceeds generally accepted and professionally recognized standards of practice, rules, and standards of professional conduct, and Laws and Government Program Requirements.

b. **Facilities, Equipment, and Personnel.** Provider's facilities, equipment, personnel, technology (hardware and software), and administrative services will be at a level and quality necessary to perform Provider's duties under this Agreement and to comply with Laws and Government Program Requirements. Provider will further ensure that its personnel comply with the applicable terms of this Agreement.

c. **Prior Authorization.** For a Covered Service that requires a prior authorization, Provider is required to obtain prior authorization from Health Plan for such Covered Service. Provider will not have to obtain prior authorizations before providing Emergency Services.

d. **Use of Participating Providers.** Except in the case of Emergency Services or when Provider obtains prior authorization, Provider will only utilize Participating Providers to provide Covered Services. Provider will notify Health Plan so that Health Plan can determine the appropriate provider to perform the services if a Participating Provider is not available.

e. **Prescriptions.** When prescribing medications that a Member gets through a pharmacy, Provider will follow Health Plan's Drug Formulary/Prescription Drug List, and prior authorization and prescription policies. Provider acknowledges the authority of pharmacies to substitute generics or low cost alternative prescriptions for the prescribed medications.

f. **Provider-Member Communication.** Health Plan encourages open Provider-Member communication regarding Medical Necessity, appropriate treatment, and care. Provider is free to communicate all treatment options to Members regardless of limitations on Covered Services.

g. **Member Eligibility Verification.** Provider will verify a Member's eligibility before providing a Covered Service unless the situation involves the provision of an Emergency Service and will confirm eligibility in a manner that is consistent with Law and Government Program Requirements on redeterminations of eligibility.

h. **Availability of Services.** Provider will meet applicable standards for timely access to care and services in accordance with Laws and Government Program Requirements. Provider will ensure the availability of Covered Services twenty-four (24) hours a day, seven (7) days a week, for those Covered Services that are required to be made available twenty-four (24) hours a day, seven (7) days a week.

i. **Privileges.** Provider will have staff/admitting privileges with at least one (1) Health Plan contracted hospital as necessary to provide Covered Services. To the extent permitted by Law, Provider will authorize each hospital to notify Health Plan if disciplinary or other action of any kind is initiated against Provider which could result in the suspension, reduction, or modification of Provider's privileges. If Provider does not have privileges with at least one (1) Health Plan contracted hospital, Provider must provide an acceptable arrangement to Health Plan that ensures Members' continuity of care.

2.2 **Rights of Members.** Provider will observe, protect, and promote the rights of Members.

2.3 **Use of Name.** Provider will participate in Health Plan's promotional activities conducted in accordance with Law and Government Program Requirements. Neither Provider nor Health Plan will use the other's name, including, but not limited to, trademarks, service marks, domain names, or logos ("Marks") without the prior written approval of the other Party. This Agreement does not grant either Party a license or sublicense to the other Party's Marks. However, Provider may refer to Health Plan in its listings of participating health plans. Additionally, Health Plan may use Provider's name and related information: (i) in Health Plan's filings and publications to identify Provider as a Participating Provider; (ii) in communications to identify Provider to Members; and (iii) as may be required to comply with the Laws and Government Program Requirements. Provider agrees that marketing materials related to this Agreement require Health Plan's review and prior written approval unless otherwise noted in the Agreement.

2.4 **Non-Discrimination.** Provider will not differentiate or discriminate against individuals based on their status as protected veterans or because of race, color, religion, national origin, ancestry, age, sex, marital status, sexual orientation, physical, sensory or mental handicap, disability, socioeconomic status, or participation in publicly financed programs of health care services or any other basis prohibited by Law. Provider will provide Covered Services in the same location, in the same manner, in accordance with the same standards, and within the same time or availability, regardless of payer.

2.5 **Recordkeeping.**

a. **Maintaining Records.** Provider will maintain complete and correct books and records relating to services provided under this Agreement for tax, accounting, and operation purposes. Provider will maintain medical and billing records ("Records") for each Member to whom Provider provides health care and related services and supplies. The Member's Records will contain all information required by Laws, generally accepted and prevailing professional practices, applicable Government Program Requirements, and Health Plan's policies and procedures. Provider will retain such Records for as long as required by Laws and Government Program Requirements. This section will survive any termination.

b. **Confidentiality of Member Record.** Provider will comply with all Laws, including, but not limited to, the Health Insurance Portability and Accountability Act of 1996 ("HIPAA") and the Health Information Technology for Economic and Clinical Health ("HITECH") Act, Health Plan's policies and procedures, and Government Program Requirements regarding privacy and confidentiality. Provider will not disclose or use a Member's name, address, social security number, identity, other personal information, treatment modality, or Record without obtaining appropriate authorization or as otherwise permitted by Law. This section does not affect or limit Provider's obligation to make available the Record, Encounter Data, and information concerning a Member's care to Health Plan, a governmental agency, or another provider of health care. This section will survive any termination.

c. **Delivery of Member Information.** Provider will promptly deliver to Health Plan, upon request or as may be required by Laws, Health Plan's policies and procedures, Government Program Requirements, or third party payers, any information, statistical data, Encounter Data, or Record pertaining to a Member to the extent permitted by Law. Provider is responsible for the costs associated with producing the above items. Provider will

further give direct access to the items as requested by Health Plan or as required by a governmental agency. This section will survive any termination.

d. **Member Access to Member Record.** Provider will give each Member access to the Member's Record and other applicable information, in accordance with Laws, Government Program Requirements, and Health Plan's policies and procedures. This section will survive any termination.

2.6 **Program Participation.**

a. **Participation in Appeals and Grievance Programs.** Provider will participate in and comply with Health Plan's Appeals and Grievance Programs.

b. **Participation in Quality Improvement Program.** Provider will participate in and comply with Health Plan's QI Program. Provider will cooperate in conducting peer reviews and audits of care and services provided by Provider.

c. **Participation in Utilization Review and Management Program.** Provider will participate in and comply with Health Plan's UM Program. Provider will cooperate with Health Plan in audits to identify, confirm, and assess utilization levels of Covered Services.

d. **Participation in Credentialing.** Provider will participate in and comply with Health Plan's credentialing and re-credentialing program. Provider must be credentialed by Health Plan or Health Plan's designee before providing Covered Services and must remain credentialed throughout the term of the Agreement to continue to provide Covered Services. Provider will promptly notify Health Plan of any change in the information submitted or relied upon by Provider to achieve or maintain its credentialed status.

e. **Health Education/Training.** Provider will participate in and comply with Health Plan's provider education and training program, which includes the Cultural Competency Plan and such standards, policies, and procedures as may be necessary for Health Plan to comply with Laws and Government Program Requirements.

2.7 **Provider Manual.** Provider will comply with the Provider Manual, which is incorporated by reference into this Agreement, as may be unilaterally updated by Health Plan. Provider acknowledges the Provider Manual is available to Provider at Health Plan's website. A physical copy of the Provider Manual is available upon request.

2.8 **Supplemental Materials.** Health Plan may issue bulletins or other written materials to supplement the Provider Manual or to give additional instruction, guidance, or information ("Supplemental Materials"). Health Plan may issue Supplemental Materials in an electronic format, which includes, but is not limited to, posting on Health Plan's web portal; physical copies are available upon request. Supplemental Materials become binding as of the effective date indicated on the Supplemental Materials or, if applicable, the effective date will be determined in accordance with this Agreement.

2.9 **Health Plan's Electronic Processes and Initiatives.** Provider will participate in and comply with Health Plan's electronic processes and initiatives, including, but not limited to, electronic submission of prior authorization, access to electronic medical records, electronic claims filing, electronic data interchange, electronic remittance advice, electronic fund transfers, and registration and use of Health Plan's web-portal.

2.10 **Information Reporting and Changes.** Provider will deliver to Health Plan a complete and accurate list of its business/practice/facility locations and, as applicable, a list of each person and entity performing Covered Services, together with the specific information required for administration of this Agreement. The information includes, but is not limited to, the information required by Health Plan to produce provider directories and any subsequent changes to that information. Provider will be required to deliver any changes as to the persons and entities who are covered under this Agreement within five (5) days. Each person or entity will only be part of this Agreement after Provider has received written approval from Health Plan, which includes, but is not limited to, confirmation that credentialing is complete, if required. Notwithstanding the above, if a Law or Government Program Requirement requires the delivery of information described in this section in another manner or different timeframe, Provider will notify Health Plan in accordance with the Law or Government Program Requirement. Health Plan also reserves the right to request such information at any time.

2.11 **Standing.**

a. **Licensure.** Provider represents it has the appropriate licenses to provide Covered Services. This includes having and maintaining a current narcotics number issued by proper authorities when appropriate. Provider will deliver evidence of licensure to Health Plan upon request. Provider will maintain its licensure in good standing, free of disciplinary action, and in unrestricted status. Provider will promptly notify Health Plan of changes in its licensure status, including, but not limited to, disciplinary action taken or proposed by any agency responsible for oversight of Provider.

b. **Unrestricted Status.** Provider represents to its best knowledge, information, and belief, neither it, nor any of its employees, temporary employees, volunteers, consultants, members of its board of directors, officers, or contractors or any persons or entities with an ownership or control interest in Provider as defined and set forth in 42 CFR 455.101 and 455.104 (collectively, "Personnel") have been excluded from participation in the Medicare Program, any state, commonwealth, or the District of Columbia's Medicaid Program, or any other federal health care program (collectively "Federal Health Care Program"). Provider agrees that it must check the Department of Health and Human Services Office of Inspector General List of Excluded Individuals and Entities, the System for Award Management, any other list maintained by a state, commonwealth, or federal government, and every state, commonwealth, and the District of Columbia's Medicaid exclusion lists (including criminal background and registry checks) to determine whether Provider or any of its Personnel have been excluded from participation in any Federal Health Care Program. These databases must be checked for any new Personnel and thereafter not less than monthly. Provider will notify Health Plan immediately in writing if Provider determines that Provider or any of its Personnel are suspended or excluded from any Federal Health Care Program. Provider agrees that it is subject to 2 CFR Part 376 and will require its Personnel to agree that they are subject to 2 CFR Part 376. If a governmental agency imposes a penalty, sanction, or other monetary adjustment or withhold due to Provider's non-compliance with this provision or any payments were made to Provider while under non-compliance with this provision, Health Plan will issue a letter requesting payment of the amount imposed. If the Provider does not timely pay the amount, Health Plan may collect the amount by offsetting or recouping from any amounts due. If required, such offset or recoupment will be done in a manner that is compliant with Laws and Government Program Requirements. This section will survive any termination.

c. **Legal Actions.** Provider will give prompt written notice to Health Plan of: (i) a legal claim asserted by a Member and information about its resolution; (ii) a criminal investigation or charge, information, or indictment filed and information about its resolution; and (iii) a legal claim that may jeopardize financial soundness and information about its resolution. This section will survive any termination.

d. **Liability Insurance.** Provider will maintain general liability insurance, professional liability insurance, and additional insurance coverage consistent with industry standards and as required by Laws and Government Program Requirements, but such amount will be no less than one million dollars ($1,000,000.00) per occurrence and three million dollars ($3,000,000.00) in the aggregate for a policy year for general and, as applicable, professional liability insurance. If the coverage is claims made or reporting, Provider agrees to purchase "tail" coverage upon termination of the Provider's present or subsequent policy unless such policy covers prior acts. Provider will deliver copies of such insurance policy to Health Plan within five (5) business days of a written request by Health Plan. Provider will deliver advance written notice fifteen (15) business days before any change, reduction, cancellation, or termination of its insurance coverage. This section will survive any termination.

2.12 **Non-Solicitation of Members.** Provider will not solicit or encourage Members to select another health plan. Nothing in this provision is intended to limit the information available to Members related to Medical Necessity, appropriate treatment, or alternative care.

2.13 **Laws and Government Program Requirements.**

a. **Compliance with Laws and Government Program Requirements.** Provider will comply with the Laws that are applicable to this Agreement. Provider acknowledges Health Plan has entered into Government Contracts and Provider agrees it will comply with the applicable Government Program Requirements for each Product. Upon written request from Provider, Health Plan will give Provider a copy of each Government Contract under which Provider is participating, redacted to remove financial and other private and trade secret information.

b. **Fraud and Abuse Reporting.** Provider will comply with Laws and Government Program Requirements relating to fraud, waste, and abuse. Provider will establish and maintain policies and procedures for identifying and investigating fraud, waste, and abuse. In the event Provider discovers an occurrence of fraud, waste, or abuse, Provider will promptly notify Health Plan. Provider will participate in and comply with investigations conducted by Health Plan or by a governmental agency. This section will survive any termination.

c. **Advance Directive.** Provider will comply with Laws and Government Program Requirements related to Advance Directives.

d. **Ownership Disclosure Information.** If applicable, Provider must disclose to Health Plan the name and address of each person, entity, or business with an ownership or control interest in the disclosing entity before the Effective Date and throughout the term of this Agreement. Provider or disclosing entity must also disclose to Health Plan whether any person, entity, or business with an ownership or control interest in the disclosing entity are related to another as spouse, parent, child, or sibling before the Effective Date and throughout the term of this Agreement. Furthermore, there must be disclosure of the name of any other disclosing entity in which a person with an ownership or controlling interest in the Provider or disclosing entity also has an ownership or control interest.

2.14 **Applicability of Agreement to Affiliates.** Provider acknowledges and agrees that the terms and conditions of this Agreement also apply to Affiliates for which Health Plan makes its Participating Providers available. Provider agrees to provide Covered Services to such Affiliates' Members in accordance with the terms and conditions of the Affiliates' Products and this Agreement. Provider will be compensated for Clean Claims for Covered Services that are determined to be payable at the rate set forth in this Agreement unless otherwise required by a Law or Government Program Requirement. Provider will comply with the terms and conditions of this Agreement when providing services to Affiliates' Members. In connection with services provided pursuant to this Section 2.14, defined terms used in this Agreement including, but not limited to, "Covered Services, "Member," and "Product" shall be interpreted to apply to Affiliates.

2.15 **Abuse, Neglect, and Exploitation.** Provider will comply with the Laws and Government Program Requirements relating to the reporting of abuse, neglect, and exploitation.

2.16 **Transfer of Members.** Provider will not unilaterally assign or transfer Members to another Participating Provider or non-Participating Provider without the prior written approval of Health Plan.

2.17 **Condition Change.** Provider will promptly notify Health Plan's Care Management Team upon becoming aware of a significant change in a Member's health or functional status or death except when otherwise required by a Law or Government Program Requirement.

ARTICLE THREE – HEALTH PLAN'S OBLIGATIONS

3.1 **Health Plan Compliance.** Health Plan will comply with all Laws and Government Program Requirements that are applicable to this Agreement.

3.2 **Member Eligibility Determination.** Health Plan will maintain data on Member eligibility and enrollment. Health Plan will promptly verify Member eligibility at the request of Provider.

3.3 **Prior Authorization Review.** Health Plan will respond with a determination on a prior authorization request in accordance with the time frames required by Laws and Government Program Requirements after receiving all necessary information from Provider.

3.4 **Medical Necessity Determination.** Health Plan's determination regarding Medical Necessity, including, but not limited to, determinations of level of care and length of stay, will govern.

3.5 **Member Services.** Health Plan will provide services to Members, including, but not limited to, assisting Members in selecting a primary care physician, processing Member complaints and grievances, informing Members of Health Plan's policies and procedures, providing Members with membership cards, providing Members with information about Health Plan, and providing Members with access to Health Plan's Provider Directory.

3.6 **Provider Services.** Health Plan will make available a Provider Services Department that, among other Health Plan duties, is available to assist Provider with questions about this Agreement.

3.7 **Corrective Action.** Health Plan, and governmental agencies routinely monitor the level, manner, and quality of Covered Services provided as well as Provider's compliance with this Agreement. If a deficiency is identified, Health Plan or an agency, in its sole discretion, may choose to issue a corrective action plan to address the deficiency. Provider is required to accept and implement such corrective action plan. Provider is not entitled to a corrective action plan prior to any termination.

3.8 **Reassignment of Members.** Health Plan reserves the right to reassign, limit, or deny the assignment or selection of Members to Provider if Health Plan determines that Provider poses a threat to Members' health and safety or during a termination notice period in accordance with Laws and Government Program Requirements. Provider will ensure copies of the Member's medical records are delivered to the new provider within ten (10) business days of receipt of the Health Plan's or the Member's request to transfer the records. Subject to the foregoing, if Provider requests reassignment of a Member, Health Plan will consider reassignment in accordance with Laws and Government Program Requirements or, if there are no applicable Laws or Government Program Requirements, upon good cause shown by Provider.

3.9 **Quality Bonus Payment Program.** Health Plan may offer Provider the opportunity to participate in Health Plan's Quality Bonus Payment Program ("QBPP"). The QBPP will promote quality of care if offered. Provider must register with Health Plan's web portal and remain in compliance with this Agreement to be eligible for any QBPP. Payments under the QBPP will be based on the terms of the QBPP as set forth in the Provider Manual, in a Supplemental Material, or in an amendment to this Agreement. QBPP payments are not guaranteed payments and are paid separately from the compensation due pursuant to the terms of this Agreement.

ARTICLE FOUR – CLAIMS PAYMENT

4.1 **Claims.** Provider will promptly submit to Health Plan Claims for Covered Services in a standard form that is acceptable to Health Plan. Provider will not be eligible for payment on Claims submitted beyond ninety-five (95) days from the Date of Service, unless Health Plan is required to follow a different timeframe pursuant to a Law or Government Program Requirement. When Health Plan is the secondary payer, Provider is not eligible for payment for Claims submitted more than ninety-five (95) days from the date the primary payer adjudicated the Claim, unless Health Plan is required to follow a different timeframe pursuant to a Law or Government Program Requirement. Provider will include all medical records pertaining to the Claim if requested by Health Plan and as may be required by Health Plan's policies and procedures.

4.2 **Compensation.** Health Plan will pay Provider for Clean Claims for Covered Services, that are determined to be payable, in accordance with Laws, Government Program Requirements, and this Agreement. Health Plan will make payment within sixty (60) days, unless otherwise required by Laws or Government Program Requirements. Provider agrees to accept such payments, Member cost-sharing, coordination of benefits, and amounts due from third parties as payment in full for Covered Services. Provider's failure to comply with the terms of this Agreement may result in non-payment to Provider.

4.3 **Member Cost-Sharing.** Provider is responsible for the collection of co-payments, co-insurances, and deductibles, if any, from Members. Provider agrees to bill Members and collect such cost-sharing amounts from Members.

4.4 **Member Hold Harmless.** Provider agrees in no event, including, but not limited to, non-payment, insolvency, or breach of this Agreement by Health Plan, will Provider bill, charge, collect a deposit from, seek remuneration or reimbursement from, or have any recourse against a Member or person acting on a Member's behalf for Covered Services provided pursuant to this Agreement. This does not prohibit Provider from collecting co-payments, co-insurances, or deductibles as specifically provided in the Member's evidence of coverage or fees for non-Covered Services in accordance with Laws and Government Program Requirements. For the purposes of this section, non-Covered Services do not include services that have been determined to be not Medically Necessary by Health Plan. This section will survive any termination, regardless of the reason for the termination, including insolvency of Health Plan.

4.5 **Coordination of Benefits.** Health Plan is a secondary payer where another entity is the primary payer. Provider will inquire of each Member to learn if the Member has health insurance or health benefits other than from Health Plan or is entitled to payment from: (i) another insurer or plan of any type; or (ii) a third party under any other form of compensation, including, but not limited to, personal injury settlements. Provider will file and make reasonable efforts to collect such potential entitlements and Provider will promptly notify Health Plan of such potential entitlement. Unless otherwise required by a Law or Government Program Requirement, Provider will be

compensated in an amount equal to the allowable Clean Claim less the amount due from other insurers, plans, or third parties, not to exceed the amount specified in the Compensation Schedule of this Agreement.

4.6 **Offset.** In the event of an Overpayment, Health Plan will issue an Overpayment letter requesting repayment of the funds. If the Provider does not timely repay the Overpayment, Health Plan may collect the amount by offsetting or recouping from any amounts due after issuing the Overpayment letter to Provider. If required, the offset or recoupment will be done in a manner that is compliant with Laws and Government Program Requirements. As applicable to the Product, Provider will comply with the Laws and Government Program Requirements regarding the identification and return of Overpayments. Provider will notify Health Plan and applicable governmental agencies of any Overpayments identified by Provider. The offset and recoupment rights set forth in this Agreement will be deemed to be and to constitute rights of offset and recoupment authorized under Law or in equity to the maximum extent legally permissible. Notwithstanding any other provision of this Agreement, the offset and recoupment rights for an Overpayment may be exercised to the time period permitted by Law. Such rights will not be subject to any requirement of prior or other approval from a court or other governmental agency that may now or hereafter have jurisdiction over Health Plan or Provider unless otherwise required for compliance with a Law or Government Program Requirement. This section will survive any termination.

4.7 **Claim Review**. Claims will be reviewed and paid in accordance with Health Plan's policies and procedures which are based on Health Plan's experience and industry standard billing and payment rules, including, but not limited to, the Uniform Billing ("UB") manual and editor, Current Procedural Terminology ("CPT") and Healthcare Common Procedure Coding System ("HCPCS"), federal and state billing and payment rules, National Correct Coding Initiatives ("NCCI") Edits, and Federal Drug Administration ("FDA") definitions and determinations of designated implantable devices and implantable orthopedic devices. Furthermore, Provider acknowledges Health Plan's right to conduct Medical Necessity reviews and apply clinical practice standards to determine appropriate payment. Payment may exclude certain items not billed in accordance with Health Plan's policies and procedures or that do not meet Medical Necessity criteria. This section will survive any termination.

4.8 **Claim Auditing.** Provider acknowledges Health Plan's right to conduct post-payment billing audits. Provider will cooperate with Health Plan's audits of claims and payments by providing access at reasonable times to requested claims information, all supporting medical records, Provider's charging policies, and other related data. Health Plan will use established industry claims adjudication and clinical practices, federal and state guidelines, and Health Plan's policies and data to determine the appropriateness of the billing, coding, and payment. This section will survive any termination.

4.9 **Financially Responsible Entity Payments.** If Provider provides Covered Services that are the responsibility of a Responsible Entity, Provider will look solely to the Responsible Entity for payment for the Covered Services.

4.10 **Timely Submission of Encounter Data**. Provider understands Health Plan may have certain contractual reporting obligations that require timely submission of Encounter Data. If a Clean Claim does not contain the necessary Encounter Data, Provider will submit Encounter Data to Health Plan. This section will survive any termination.

ARTICLE FIVE – TERM AND TERMINATION

5.1 **Term.** This Agreement will commence on the Effective Date indicated by Health Plan and will continue in effect for one (1) year and will renew for successive one (1) year terms unless terminated by either Party in accordance with this Agreement.

5.2 **Termination without Cause.** This Agreement, an individual Product, or an Individual Provider under this Agreement, may be terminated without cause at any time by either Party by giving at least ninety (90) days prior written notice to the other Party.

5.3 **Termination with Cause.** In the event of a breach of a material provision of this Agreement, the Party claiming the breach will give the other Party written notice of termination setting forth the facts underlying its claim that the other Party breached this Agreement. The Party receiving the notice of termination will have thirty (30) days from the date of receipt of such notice to remedy or cure the claimed breach to the satisfaction of the other Party. During this thirty (30) day period, the Parties agree to meet as reasonably necessary and to confer to resolve the claimed breach. If the Party receiving the notice of termination has not remedied or cured the breach within such thirty (30) day period, the Party who delivered the notice of termination has the right to immediately terminate this Agreement,

or an individual Product or an Individual Provider under this Agreement, upon expiration of the thirty (30) day period. Notwithstanding the forgoing, either Party may immediately terminate this Agreement, an individual Product, or an Individual Provider under this Agreement, without providing the other Party the opportunity to cure a material breach should the terminating Party reasonably believe the material breach of this Agreement to be non-curable.

5.4 **Immediate Termination.** Notwithstanding any other provision of this Agreement, this Agreement, an individual Product, or an Individual Provider under this Agreement, may immediately be terminated upon written notice to the other Party in the event any of the following occurs:

a. Provider's license or any other approval needed to provide Covered Services is limited, suspended, or revoked, a disciplinary proceeding is commenced against Provider by a governmental or accrediting agency, or an indictment is issued against Provider;

b. Either Party fails to maintain adequate levels of insurance;

c. Provider has not or is unable to comply with Health Plan's credentialing requirements, including, but not limited to, having or maintaining credentialing status;

d. Either Party becomes insolvent or files a petition to declare bankruptcy or for reorganization under the bankruptcy laws of the United States, or a trustee in bankruptcy or receiver for Provider or Health Plan is appointed by appropriate authority;

e. If Provider is capitated or participating in another risk-sharing compensation methodology and Health Plan determines Provider is financially incapable of bearing capitation or other applicable risk-sharing compensation methodology;

f. Health Plan reasonably determines that Provider's facility, equipment, or Personnel are insufficient to provide Covered Services;

g. Either Party is excluded/precluded from participation in a state or federal health care program;

h. Provider is terminated as a provider by a state or federal health care program;

i. Either Party engages in fraud, waste, or abuse or permits fraud, waste, or abuse by another in connection with the Party's obligations under this Agreement;

j. Health Plan reasonably determines that Covered Services are not being properly provided or arranged for by Provider and such failure poses a threat to Members' health and safety;

k. Provider violates any Law;

l. Provider fails to satisfy the terms of a corrective action plan; or

m. Termination is required by a governmental agency.

5.5 **Notice to Members.** In the event of any termination, Health Plan will give reasonable notice to Members as required by Laws and Government Program Requirements and the Parties will ensure the continuity of care in accordance with and to the extent required by Laws and Government Program Requirements.

5.6 **Transfer Upon Termination.** In the event of any termination, Health Plan may transfer Members to another provider.

ARTICLE SIX – GENERAL PROVISIONS

6.1 **Indemnification.** To the extent permitted by the law of the State in which Provider is located each Party will indemnify and hold harmless the other Party and its officers, directors, shareholders, employees, agents, and representatives from any and all liabilities, losses, damages, claims, and expenses of any kind, including costs and attorneys' fees, which result from a breach of the duties and obligations of the indemnifying Party or its officers, directors, shareholders, employees, agents, and representatives under this Agreement. Each Party agrees to give the other Party prompt written notice of any claim made against the other Party. This section will survive the termination of this Agreement.

6.2 **Relationship of the Parties.** Nothing contained in this Agreement is intended to create, nor will it be construed to create, any relationship between the Parties other than that of independent parties contracting with each other solely for effectuating this Agreement. This Agreement is not intended to create a relationship of agency, representation, joint venture, or employment between the Parties. Nothing herein contained will prevent the Parties from entering into similar arrangements with other parties. Each Party will maintain separate and independent management and will be responsible for its own operations. Nothing contained in this Agreement is intended to create, nor will it be construed to create, any right in any third-party to enforce this Agreement.

6.3 **Governing Law.** The laws of the State of Texas will govern this Agreement to the extent such laws are not preempted by federal Laws.

6.4 **Entire Agreement.** This Agreement, including attachments, addenda, amendments, Provider Manual, Supplemental Materials, and incorporated documents or materials, contains the entire agreement between the Parties relating to the rights granted and obligations imposed by this Agreement. Any prior agreements, promises, negotiations, or representations, either oral or written, between the Parties and relating to the subject matter of this Agreement, are of no force or effect.

6.5 **Severability.** If a term, provision, covenant, or condition of this Agreement is held by a court of competent jurisdiction or any governmental agency with oversight authority for this Agreement to be invalid, void, or unenforceable, the remaining provisions will remain in full force and effect and will in no way be affected, impaired, or invalidated because of such decision.

6.6 **Headings and Construction.** The headings in this Agreement are for reference purposes only and are not considered a part of this Agreement in construing or interpreting its provisions. It is the Parties' desire that if a provision of this Agreement is determined to be ambiguous, then the rule of construction that such provision is construed against its drafter will not apply to the interpretation of the ambiguous provision. The following rules of construction apply to this Agreement: (i) the word "day" means calendar day unless otherwise specified; (ii) the term "business day" means Monday through Friday, except federal holidays; (iii) all words used in this Agreement will be construed to be of such gender or number as circumstances require; (iv) references to specific statutes, regulations, rules or forms, such as CMS-1500, include subsequent amendments or successors to them; and (v) references to any government department or agency include any successor departments or agencies.

6.7 **Non-exclusivity.** This Agreement will not be construed to be an exclusive Agreement between the Parties. Nor will it be deemed to be an Agreement requiring Health Plan to refer Members to Provider.

6.8 **Amendments.**

a. **Regulatory Amendments.** Health Plan may immediately amend this Agreement to maintain consistency or compliance with applicable policy, directive, Law, or Government Program Requirement at any time and without Provider's consent. Such regulatory amendment will be binding upon Provider.

b. **Non-Regulatory Amendments.** Notwithstanding the Regulatory Amendments section, Health Plan may otherwise amend this Agreement upon thirty (30) days prior written notice to Provider. If Provider does not deliver a written disapproval to such amendment within the thirty (30) day period, the amendment will be deemed accepted by and binding upon Provider. If Health Plan receives a written disapproval within the thirty (30) day period, the Parties agree to meet and confer in good faith to determine if a revised amendment can be accepted by and binding upon the Parties.

6.9 **Delegation or Subcontract.** Provider will submit to Health Plan a list identifying Provider's Subcontractors with a description of the services each Subcontractor provides. . Provider will promptly submit updates to the list to Health Plan. Provider will ensure each Subcontractor complies with the applicable terms of this Agreement. Provider's contract with a Subcontractor will be in writing and will bind the Subcontractor to the applicable terms required for compliance with this Agreement. Health Plan has the right to request Provider limit the use of a Subcontractor that does not meet the applicable terms of the Agreement and Provider will take reasonable action to comply with the request.

6.10 **Assignment.** Provider may not assign or transfer, in whole or in part, any rights, duties, or obligations under this Agreement without the prior written consent of Health Plan. Subject to the foregoing, this Agreement is binding upon, and inures to the benefit of the Parties and respective successors in interest and assignees. Neither the acquisition of Health Plan nor a change of its legal name shall be deemed an assignment.

6.11 **Mediation Allowed**

a. **Mediation Requirements.** Any dispute, claim, or controversy arising out of or relating to this Agreement or the breach, termination, enforcement, interpretation, or validity thereof, including the determination of the scope or applicability of this agreement to arbitrate (hereafter "Dispute"), may be determined by non-binding mediation, subject to the terms of this section. The arbitration shall take place in a mutually agreed upon location in front of one (1) mediator. The mediator will be an attorney with at least fifteen (15) years of experience, including at least five (5) years of experience in health care. The mediation shall be administered by mutually agreed upon rules and procedures. Judgment on the award may be entered in any court having jurisdiction. This section shall not preclude the Parties from seeking provisional remedies in aid of mediation from a court of appropriate jurisdiction. Matters that primarily involve Provider's professional competence or conduct (i.e., malpractice, professional negligence, or wrongful death) are not eligible for mediation.

b. **Meet and Confer.** Prior to the initiation of any legal action, , the Parties shall attempt to resolve any dispute, claim, or controversy arising out of or relating to this Agreement or the breach, termination, enforcement, interpretation, or validity thereof (hereafter "Dispute") via a good faith "Meet and Confer." To initiate a Meet and Confer, a Party shall deliver to the other Party a written notice of the Dispute that includes a demand to Meet and Confer. The notice shall include: (i) a statement of the Party's position and a summary of arguments supporting that position; and (ii) the name and contact information of the executive who will participate in the Meet and Confer. The Meet and Confer shall be held within forty-five (45) days of the delivery of the notice, at a mutually acceptable time and place, between appropriate representatives of the Parties, including a person authorized to settle the Dispute (the "First Meeting"). The Parties may agree to further discussions after the First Meeting. At no time prior to the First Meeting shall either Party initiate an mediation or litigation related to this Agreement, except to pursue a provisional remedy that is authorized by law. This limitation is inapplicable to a Party if the other Party refuses to comply with the requirements of this subsection. Any legal action must be initiated within two (2) years of the earlier of the date the Dispute arose, was discovered, or should have been discovered with reasonable diligence; otherwise, the Dispute will be deemed waived, and the complaining Party shall be barred from initiating legal proceedings. The Parties expressly agree that the deadline to file a legal proceeding shall not be subject to waiver, tolling, alteration, or modification of any kind or for any reason other than fraud.

c. **Rules for Arbitration.** The mediator will have no authority to give a remedy or award damages that would not be available to such prevailing Party in a court of law, nor will the mediator have the authority to award punitive, exemplary, or treble damages. The mediator will deliver a written reasoned decision within thirty (30) days of the close of mediation unless an alternate agreement is made during the mediation.

The Parties agree to accept any decision by the mediator, which is grounded in applicable law, as a final determination of the matter in dispute. The award may be vacated, modified, or corrected pursuant to the applicable law. Grounds for vacating an award include: (i) where the award was procured by corruption, fraud, or undue means; (ii) where the arbitrator was guilty of misconduct or exceeded their powers; (iii) evident material miscalculation; (iv) evident material mistake in the description of any person, thing, or property referred to in the award; and (v) imperfections in a matter of form not affecting the merits.

Each Party shall bear its own costs and expenses of mediation, including its own attorneys' fees, and shall bear an equal share of the arbitrator and administrative fees of mediation.

Mediation must be initiated within two (2) years of the earlier of the date the Dispute arose, was discovered, or should have been discovered with reasonable diligence; otherwise the Dispute will be deemed waived and the complaining Party shall be barred from initiating mediation or other proceedings. The Parties expressly agree that the deadline to seek mediation shall not be subject to waiver, tolling, alteration, or modification of any kind or for any reason other than fraud.

6.12 **Notice.**

a. **Delivery.** All notices required or permitted by this Agreement, except for Supplemental Materials, will be in writing and delivered: (i) in person; (ii) by U.S. Postal Service ("USPS") registered, certified, or express mail

with postage prepaid; (iii) by overnight courier that guarantees next day delivery (e.g., Federal Express, UPS); (iv) by facsimile transmission; or (v) by email. Notice is deemed given: (i) on the date of personal delivery; (ii) on the second day after the postmark date for USPS registered, certified, or express mail with postage prepaid; (iii) on the date of delivery shown by overnight courier; or (iv) on the date of transmission for facsimile or email.

b. **Addresses.** The mailing address, email address, and facsimile number set forth under the Signature Page will be the Party's information for delivery of notice. Each Party may change its information through written notice in compliance with this section without amending this Agreement. Notice will be sent to the attention of the Authorized Representative.

6.13 **Waiver.** A failure or delay of a Party to exercise or enforce any provision of this Agreement will not be deemed a waiver of any right of that Party. Any waiver must be specific, in writing, and executed by the Parties.

6.14 **Execution in Counterparts and Duplicates.** This Agreement may be executed in counterparts, each of which will be deemed an original, but all of which together will constitute one and the same instrument. The Parties agree facsimile signatures, pdf signatures, photocopied signatures, electronic signatures, or signatures scanned and sent via email will have the same effect as original signatures.

6.15 **Force Majeure.** Neither Party will be liable or deemed to be in default for any delay or failure to perform any duty under this Agreement resulting directly or indirectly, from acts of God, civil or military authority, acts of a public enemy, war, accident, fire, explosion, earthquake, flood, strikes by either Party's employees, or any other similar cause beyond the reasonable control of such Party if it is determined that: (i) the Party used the efforts a reasonable person would during the force majeure event to perform its duties under this Agreement; and (ii) the Party's inability to perform its duties during the force majeure event is not due to its failure to take measures to protect itself against the force majeure event.

6.16 **Confidentiality.** Any information disclosed by either Party in fulfillment of its duties under this Agreement, including, but not limited to, health care information, compensation rates, and the terms of the Agreement, will be kept confidential. Information provided to Provider, including, but not limited to, Member lists, QI Program, certification/credentialing criteria, compensation rates, and any other administrative protocols or procedures of Health Plan, is the proprietary property of Health Plan and will be kept confidential. Provider will not disclose or release information to a third-party without the written consent of Health Plan. However, each Party may share information with its subsidiaries and affiliates and its respective Personnel and designees as necessary to fulfill the terms of this Agreement. Nothing in the Agreement will preclude either Party from disclosing information as required for compliance with a Law or Government Program Requirement or as required to comply with a governmental authority request provided that the information is only disclosed in a manner and to the extent required for compliance and in accordance with applicable Law. Provider will either return confidential information or destroy confidential information and provide confirmation of the destruction to Health Plan upon request if the Agreement terminates. This section will survive any termination.

6.17 **Adjustments.** If a governmental agency imposes a penalty, sanction, or other monetary adjustment or withhold due to Provider's non-compliance with this Agreement, Health Plan will be able to collect the amount imposed on or withheld from Health Plan. Health Plan will issue a letter requesting payment of the amount imposed or withheld. If Provider does not timely pay the amount, Health Plan may collect the amount by offsetting or recouping from any amounts due. If required, such offset or recoupment will be done in a manner that is compliant with Laws and Government Program Requirements. This section will survive any termination.

6.18 **Expenses.** Unless otherwise specifically stated in the Agreement, all costs and expenses incurred in connection with this Agreement will be paid by the Party incurring the cost or expense.

ATTACHMENT A

Products

1.1 **Medicaid** – including, but not limited to, STAR, STAR+PLUS, STAR Kids, and any other Medicaid programs Health Plan offers in the future.

1.2 **CHIP** – including, but not limited to, the CHIP MCO, CHIP Perinatal, CHIP RSA, and any other programs developed and implemented by Texas HHSC or its successor.

1.3 **Medicare Advantage**.

1.4 **Medicare-Medicaid Program** – including, but not limited to, the STAR+PLUS Medicare-Medicaid Program.

1.5 **Health Insurance Marketplace** – including, but not limited to, Molina Marketplace.

ATTACHMENT B

Compensation Schedule

1.1 **Compensation for Medicaid.** Health Plan agrees to compensate Provider on a fee-for-service basis for Covered Services provided under the Medicaid Product that are determined by Health Plan to be payable pursuant to Laws, Government Program Requirements, and this Agreement and that are submitted on a Clean Claim, less any applicable amounts paid or to be paid by other liable third-parties and the Member for cost-sharing, including, but not limited to, co-payments, deductibles, or co-insurances, if any, at the lesser of the following amounts in effect for the Date of Service: (i) Provider's billed charges; or (ii) at an amount equivalent to the Medicaid Fee-for-Service Program allowable payment rate as set forth by the State of Texas ("Medicaid Rate") or, for those Covered Services where there is no Medicaid Rate, compensation will be thirty percent (30%) of Provider's billed charges, not to exceed seventy-five dollars ($75.00).

Except when otherwise set forth by a Law or Government Program Requirement, Provider agrees that Health Plan will implement updates or revisions to the Medicaid Fee-for-Service Program fee schedules on a prospective basis within sixty (60) days of the update or revision from the agency. The update or revision will be applied to all Claims received after the implementation and Health Plan will not be required to retrospectively adjust any Claims.

Provider agrees to the above reimbursement and participation in Medicaid:

Provider Signature: SIGN HERE **Date:** DATE

1.2 **Compensation for CHIP.** Health Plan agrees to compensate Provider on a fee-for-service basis for Covered Services provided under the CHIP Product that are determined by Health Plan to be payable pursuant to Laws, Government Program Requirements, and this Agreement and that are submitted on a Clean Claim, less any applicable amounts paid or to be paid by other liable third-parties and the Member for cost-sharing, including, but not limited to, co-payments, deductibles, or co-insurances, if any, at the lesser of the following amounts in effect for the Date of Service: (i) Provider's billed charges; or (ii) an amount equivalent to the Medicaid Fee-for-Service Program allowable payment rate as set forth by the State of Texas ("Medicaid Rate") or, for those Covered Services where there is no Medicaid Rate, compensation will be thirty percent (30%) of Provider's billed charges, not to exceed seventy-five dollars ($75.00).

Except when otherwise set forth by a Law or Government Program Requirement, Provider agrees that Health Plan will implement updates or revisions to the Medicaid Fee-for-Service Program fee schedules on a prospective basis within sixty (60) days of the update or revision from the agency. The update or revision will be applied to all Claims received after the implementation and Health Plan will not be required to retrospectively adjust any Claims.

Provider agrees to the above reimbursement and participation in CHIP:

Provider Signature: SIGN HERE **Date:** DATE

1.3 **Compensation for Medicare Advantage.** Health Plan agrees to compensate Provider on a fee-for-service basis for Covered Services provided under the Medicare Advantage Product that are determined by Health Plan to be payable pursuant to Laws, Government Program Requirements, and this Agreement and that are submitted on a Clean Claim, less any applicable amounts paid or to be paid by other liable third parties and the Member for cost-sharing, including, but not limited to, co-payments, deductibles, or co-insurances, if any, at the lesser of the following amounts in effect for the Date of Service: (i) Provider's billed charges; or (ii) at an amount equivalent to the Medicare Fee-For-Service Program allowable payment rate, geographically adjusted ("Medicare Rate"). Notwithstanding any other term of the Agreement, compensation will be thirty percent (30%) of Provider's billed charges, not to exceed seventy-five dollars ($75.00), for those Covered Services where there is no Medicare Rate.

Except when otherwise set forth by a Law or Government Program Requirement, Provider agrees that Health Plan will implement updates or revisions to the Medicare Fee-for-Service Program fee schedules on a prospective basis

within sixty (60) days of the update or revision from the agency. The update or revision will be applied to all Claims received after the implementation and Health Plan will not be required to retrospectively adjust any Claims.

Provider agrees to the above reimbursement and participation in Medicare Advantage:

Provider Signature: SIGN HERE **Date:** DATE

Compensation for Medicare-Medicaid Program.

1.4 Health Plan agrees to compensate Provider on a fee-for-service basis for Covered Services provided under the Medicare-Medicaid Program Product that are determined by Health Plan to be payable pursuant to Laws, Government Program Requirements, and this Agreement and that are submitted on a Clean Claim, less any applicable amounts paid or to be paid by other liable third-parties and the Member for cost-sharing, including, but not limited to, co-payments, deductibles, or co-insurances, if any, at the lesser of Provider's billed charges or the following amounts in effect for the Date of Service.

For Covered Services which are covered by or are primary to Medicare, an amount equivalent to the Medicare Fee-for-Service Program allowable payment rate, geographically adjusted, ("Medicare Rate") and any portion, if any, that the Medicaid agency or Health Plan would have been responsible for paying if the Member was enrolled in the Medicare Fee-for-Service Program. The Medicare Fee-for-Service Program allowable payment rate deducts any cost-sharing amounts, including, but not limited to, co-payments, deductibles, co-insurances, or amounts paid or to be paid by other liable third-parties that would have been deducted if the Member were enrolled in the Medicare Fee-for-Service Program.

For Covered Services which are covered by or are primary to Medicaid, an amount equivalent to the Medicaid Fee-for-Service Program allowable payment rate as set forth by the State of Texas ("Medicaid Rate").

Notwithstanding any other term of the Agreement, compensation will be thirty percent (30%) of Provider's billed charges, not to exceed seventy-five dollars ($75.00), for those Covered Services where there is no Medicaid Rate or Medicare Rate.

Except when otherwise set forth by a Law or Government Program Requirement, Provider agrees that Health Plan will implement updates or revisions to the Medicaid and Medicare Fee-for-Service Program fee schedules on a prospective basis within sixty (60) days of the update or revision from the agency. The update or revision will be applied to all Claims received after the implementation and Health Plan will not be required to retrospectively adjust any Claims.

Provider agrees to the above reimbursement and participation in Medicare-Medicaid (MMP) Program:

Provider Signature: SIGN HERE **Date:** DATE

1.5 **Compensation for Health Insurance Marketplace.** Health Plan agrees to compensate Provider on a fee-for-service basis for Covered Services provided under the Health Insurance Marketplace Product that are determined by Health Plan to be payable pursuant to Laws, Government Program Requirements, and this Agreement and that are submitted on a Clean Claim, less any applicable amounts paid or to be paid by other liable third-parties and the Member for cost-sharing, including, but not limited to, co-payments, deductibles, or co-insurances, if any, at the lesser of: (i) Provider's billed charges; or (ii) the following amounts in effect for the Date of Service.

a. **Professional and Other Covered Services Except Drugs and Immunizations.** For professional and other Covered Services, at one hundred percent (100%) of the prevailing Molina Fee Schedule. If a HCPCS/CPT code is not on the prevailing Molina Fee Schedule, that code is not a Covered Service.

b. **Drugs and Immunizations.** Drugs and immunizations are excluded from the Molina Fee Schedule when there is a Medicare payment rate for the Date of Service and will be reimbursed at one hundred percent (100%) of the Medicare Fee Schedule in effect for the Date of Service. If there is no Medicare payment rate for the Date of

Service, such drugs and immunizations will be included on the Molina Fee Schedule and will be paid according to the Molina Fee Schedule. Except when otherwise set forth by a Law or Government Program Requirement, Provider agrees that Health Plan will implement updates or revisions to the Medicare Fee Schedule on a prospective basis within sixty (60) days of the update or revision from the agency. The update or revision will be applied to all Claims received after the implementation and Health Plan will not be required to retrospectively adjust any Claims.

c. **Modifications of Molina Fee Schedule.**

i. **Material Changes to Existing Codes (does not include the addition and deletion of codes).** Health Plan will review and, where appropriate, update the prevailing Molina Fee Schedule. Notwithstanding any other provision in the Agreement, Health Plan shall provide ninety (90) days' notice of any material changes to the Molina Fee Schedule applicable to Provider, and the change shall become effective at the end of the 90-day notice period. If Provider objects to the material change, Provider may notify Health Plan of its intent to terminate on or before the thirtieth (30th) day after the date Provider receives notice of the material change. Termination will become effective at the end of the 90-day notice of the material change.

ii. **Addition and Deletion of Codes.** Health Plan and Provider recognize that new codes will be added or deleted periodically by Centers for Medicare and Medicaid Services ("CMS") and American Medical Association ("AMA"). Health Plan will establish a rate for codes added to the Molina Fee Schedule. Provider's contracted percentage of the Molina Fee Schedule will be applied to these rates. Health Plan will automatically remove HCPCS and CPT Codes determined to be no longer valid by AMA, effective on the date announced by AMA.

Provider agrees to the above reimbursement and participation in Health Insurance Marketplace:

Provider Signature: _____ SIGN HERE **Date:** _____ DATE

ATTACHMENT C

State of Texas Required Provisions

State Laws

This attachment sets forth applicable State Laws or other provisions necessary to reflect compliance with State Laws. This attachment will be automatically modified to conform to subsequent changes to Law. All provisions of the Agreement not specifically modified by this attachment remain unchanged and will control. In the event of a conflict between this attachment and any other provision in the Agreement, the provisions in this attachment will control. Capitalized terms used in this attachment will have the same meaning ascribed to them in the Agreement unless otherwise set forth in this attachment. Any purported modification or any provision in this attachment that is inconsistent with Law will not be effective and will be interpreted in a manner that is consistent with the applicable Law. For the avoidance of doubt, this attachment does not apply to the Medicare Advantage Product or the Medicare-Medicaid Product to the extent such Products are preempted by Federal Law.

1.1 **Retaliation.** Health Plan may not engage in retaliatory action, including refusal to renew or termination of a contract, against Provider because Provider has, on behalf of a Member, reasonably filed a complaint against Health Plan or appealed a decision of Health Plan.

1.2 **Continuity of Care.** Unless termination of this Agreement is based upon reasons of medical competence or professional behavior, Health Plan shall have a continuing obligation to reimburse Provider for the treatment of a Member with special circumstances, as defined in and in accordance with applicable Texas Law.

1.3 **Termination.** Health Plan will give reasonable advance notice to a Member of an impending termination of the Provider or a physician who is currently treating the Member.

1.4 **Deselection.** If Provider or a physician is deselected for a reason other than the request of Provider or a physician, Health Plan may not notify Members of the deselection until the effective date of the deselection or the advisory review panel makes a formal recommendation. Notwithstanding the foregoing, if Provider or a physician is deselected for a reason related to imminent harm then Health Plan may notify Members immediately.

1.5 **Member Notice.** Provider shall post in Provider's office a notice to Members on the process for resolving complaints with Health Plan. Such notice shall include the Texas Department of Insurance's toll-free telephone number for filing complaints.

1.6 **Indemnity.** Any clause purporting to indemnify Health Plan for any liability in tort resulting from an act or omission of Health Plan will be of no effect.

1.7 **Prompt Pay.** Health Plan will promptly pay Claims pursuant to applicable Law, which includes, Insurance Code Chapter 542, Subchapter B, (concerning Prompt Payment of Claims); §1271.005 (concerning Applicability of Other Law); and all applicable statutes and rules pertaining to prompt payment of Clean Claims, including Insurance Code Chapter 843, Subchapter J, (concerning Payment of Claims to Physicians and Providers); and Chapter 21, Subchapter T, of this title (relating to Submission of Clean Claims) with respect to payment to Provider for Covered Services rendered to Members.

1.8 **Podiatry.** The following provisions apply to providers credentialed by Health Plan, or Health Plan's designee, as podiatrists.

a. Podiatrists may request, and Health Plan will provide not later than the thirtieth (30th) day after the date of the request, a copy of coding guidelines and payment schedules applicable to the compensation that the podiatrist will receive under the Agreement.

b. Health Plan may not unilaterally make material retroactive revisions to the coding guidelines and payment schedules applicable to the compensation that the podiatrist will receive under the Agreement.

c. Podiatrists may, while practicing within the scope of the Law regulating podiatry, provide x-rays and non-prefabricated orthotics covered by a Member's health benefits plan.

1.9 **Capitation.** In the event Provider receives capitation, the language required by 28 TAC 11.901(b)(7) is incorporated into this Agreement.

1.10 **Primary Care Provider.** A Member will at all times have the right to select or change a primary care physician or primary care provider within Health Plan's network of available primary care physicians and primary care providers, except Health Plan may limit a Member's request to change physicians or providers to not more than four (4) changes in a twelve (12) month period. For purposes of Insurance Code Chapter 843, Subchapter J., an applicant physician, as defined by Chapter 1452, may not be considered to be an available primary care physician or primary care provider within Health Plan's delivery network for selection by an enrollee.

1.11 **Claims Filing.** If Health Plan requires Provider to electronically submit the following: (i) health care Claims or equivalent encounter information; (ii) referral certifications; or (iii) any authorization or eligibility transactions, the language required by 28 TAC 21.3701 is incorporated into this Agreement.

1.12 **Refunds.** Provider will comply with all applicable requirements of Section 1661.005 of the Texas Insurance Code (concerning Refunds of Overpayments).

1.13 **Plan Coverage.** Provider will retain in the Provider's records updated information concerning a Member's other health benefit plan coverage.

1.14 **Availability of Coding Guidelines.** Provider may request a description and copy of the coding guidelines, including any underlying bundling, recoding, or other payment process and fee schedules applicable to specific procedures that Provider will receive under the Agreement, and Health Plan or its agent shall provide the coding guidelines and fee schedules not later than thirty (30) days after Health Plan receives the request. Health Plan shall provide notice of changes to the coding guidelines and fee schedules to Provider not later than ninety (90) days before the date the changes take effect, unless the change is required by statute or regulation in a shorter timeframe, and shall not make retroactive revisions to the coding guidelines and fee schedules. Provider may terminate participation in the Products that the change in coding guidelines applies to, on or before the thirtieth (30th) day after the date Provider receives information requested under this section without penalty or discrimination in participation in other Health Plan products. Any Provider who receives information under this section may only: (i) use or disclose the information for the purpose of practice management, billing activities, and other business operations; and (ii) disclose the information to a governmental agency involved in the regulation of health care or insurance. On Provider's request, Health Plan shall provide the name, edition, and model version of the software that Health Plan uses to determine bundling and unbundling of claims.

1.15 **Termination.** Health Plan shall provide a written explanation of the reasons for Provider's termination at least ninety (90) days before the effective date of the proposed termination. Health Plan may immediately terminate a Provider in cases involving: (i) imminent harm to patient health; (ii) an action by a state medical or dental board, another medical or dental licensing board, or another licensing board or government agency that effectively impairs the Provider's ability to practice medicine, dentistry, or another profession; or (iii) fraud or malfeasance. Not later than thirty (30) days following receipt of the termination notice, Provider may request a review of Health Plan's proposed termination by an advisory review panel. A Provider whose participation is being terminated is entitled to an expedited review by Health Plan upon request. Within sixty (60) days following receipt of Provider's request and before the termination effective date, the advisory review panel will make its formal recommendation. Health Plan will communicate the advisory review panel decision to Provider and, upon Provider's request, Health Plan will provide a copy of the recommendation. The advisory review panel decision is not binding upon Health Plan.

1.16 **Prescription Drug Monitoring Program.** Provider will comply with 22 TAC 170.1, et. seq. Before a prescription for opioids, benzodiazepines, barbiturates, or carisoprodol will be issued to a Member, a mandatory Prescription Monitoring Program ("PMP") check of the Member's controlled substance prescription history is required, except as denoted in 22 TAC 170.9 (5). As described in 22 TAC 170.9, the review of the Member's PMP prescribing history must be completed prior to and each time a prescription is issued for opioids, benzodiazepines, barbiturates, or carisoprodol to a Member and the review of the Member's PMP prescribing history must be documented in the Member's medical records. If prescriber is unable to access the PMP due to circumstances outside the prescriber's control, the prescriber must make and document a good faith effort, including the reasons why the prescriber was not able to conduct a PMP check. (22 TAC 170.9 (5)(B)). Furthermore, pharmacies will comply with Texas Controlled Substances Act and 22 TAC 315, et. seq. The pharmacy must electronically submit to the Texas Medical Board ("Board") any data elements indicated as required by the Board's "Data Submission Guide for Dispensers" not later than the next business day after the date a controlled substance prescription is dispensed (22 TAC 315.6).

ATTACHMENT D

Medicaid and CHIP

Laws and Government Program Requirements

This attachment sets forth applicable Laws and Government Program Requirements, or other provisions necessary to reflect compliance for the Medicaid and CHIP Products. This attachment will be automatically modified to conform to subsequent changes to Laws or Government Program Requirements. All provisions of the Agreement not specifically modified by this attachment remain unchanged and will control. In the event of a conflict between this attachment and any other provision in the Agreement, the provisions in this attachment will control for the Medicaid and CHIP Products. Capitalized terms used in this attachment will have the same meaning ascribed to them in the Agreement unless otherwise set forth in this attachment. Any purported modification or any provision in this attachment that is inconsistent with a Law or Government Program Requirement will not be effective and will be interpreted in a manner that is consistent with the applicable Law and Government Program Requirement. This attachment only applies to the Medicaid and CHIP Products.

1.1 **Definitions.**

a. **Clean Claim** means a claim submitted by a Provider for health care services rendered to a Member, with the data necessary for the Health Plan to adjudicate and accurately report the claim. A Clean Claim other than a nursing facility services Clean Claim must meet all requirements for accurate and complete data as defined in the appropriate claim type encounter guides as follows: (i) 837 Professional Combined Implementation Guide; (ii) 837 Institutional Combined Implementation Guide; (iii) 837 Professional Companion Guide; (iv) 837 Institutional Companion Guide; or (v) National Council for Prescription Drug Programs ("NCPDP") Companion Guide.

b. **Emergency Behavioral Health Condition** means any condition, without regard to the nature or cause of the condition, which in the opinion of a prudent layperson possessing an average knowledge of health and medicine: (i) requires immediate intervention and/or medical attention without which Members would present an immediate danger to themselves or others; or (ii) renders Members incapable of controlling, knowing, or understanding the consequences of their actions.

c. **Emergency Medical Condition** means a medical condition manifesting itself by acute symptoms of recent onset and sufficient severity (including severe pain), such that a prudent layperson, who possesses an average knowledge of health and medicine, could reasonably expect the absence of immediate medical care could result in: (i) placing the patient's health in serious jeopardy; (ii) serious impairment to bodily functions; (iii) serious dysfunction of any bodily organ or part; (iv) serious disfigurement; or (v) in the case of a pregnant women, serious jeopardy to the health of a woman or her unborn child.

d. **Emergency Services** means covered inpatient and outpatient services furnished by a provider that is qualified to furnish such services under the Agreement and that are needed to evaluate or stabilize an Emergency Medical Condition and/or an Emergency Behavioral Health Condition, including Post-Stabilization Care Services.

e. **Medically Necessary or Medical Necessity (for Medicaid product/program)** has the meaning defined in 1 TAC §353.2.

f. **Medically Necessary or Medical Necessity (for CHIP product/program)** has the meaning defined in 1 TAC §370.4.

g. **Post Stabilization Care Services** means Covered Services, related to an Emergency Medical Condition that are provided after a Member is stabilized in order to maintain the stabilized condition, or, for a Medicaid Member, under the circumstances described in 42 §§CFR 438.114(b)&(e) and 42 CFR §422.113(c)(iii) to improve or resolve the Medicaid Member's condition.

1.2 **Behavioral Health.**

a. If Providers provides inpatient psychiatric services to Members, Provider must schedule Members for outpatient follow-up or continuing treatment prior to discharge. The outpatient treatment must occur within seven (7) days from the date of discharge. Behavioral health providers must contact Members who have missed appointments within twenty-four (24) hours to reschedule appointments.

b. If Providers provides behavioral or physical health (including Primary Care Providers, OB/GYNs, internists, and other relevant provider types), Provider must share amongst each other clinical information regarding Members with co-occurring behavioral and physical health conditions, to the extent allowed by federal Law.

1.3 **Early Childhood Intervention.** Providers must cooperate and coordinate with local Early Childhood Intervention ("ECI") programs to comply with federal and state requirements relating to the development, review, and evaluation of Individual Family Service Plans ("IFSP"). Provider understands and agrees that any Medically Necessary health and behavioral health services contained in an IFSP must be provided to the Member in the amount, duration, scope, and setting established in the IFSP.

1.4 **Liability.** Provider understand and agrees that: (i) in the event Health Plan becomes insolvent or ceases operations, Provider sole recourse against Health Plan will be through the Health Plan's bankruptcy, conservatorship, or receivership estate; (ii) Members may not be held liable for Health Plan's debts in the event of Health Plan insolvency; and (iii) Texas Health and Human Services Commission ("HHSC") does not assume liability for the actions of, or judgments rendered against, Health Plan, its employees, agents, or subcontractors. Further, there is no right of subrogation, contribution, or indemnification against HHSC for any duty owed to Provider by the Health Plan or any judgment rendered against the Health Plan. HHSC's liability to Provider, if any, will be governed by the Texas Tort Claims Act, as amended or modified (Tex. Civ. Pract. & Rem. Code 101.001 et seq.).

1.5 **Marketing.** Provider agrees to comply with state and federal laws, rules, and regulations governing marketing. In addition, Provider agrees to comply with HHSC's marketing policies and procedures, as set forth in HHSC's Uniform Managed Care Manual ("UMCM"). Provider is prohibited from engaging in direct marketing to Members that is designed to increase enrollment in a particular health plan. The prohibition should not constrain Providers from engaging in permissible marketing activities consistent with broad outreach objectives and application assistance.

1.6 **Medicaid Provider Agreement.** Acute care providers serving Medicaid Members must enter into and maintain a Medicaid provider agreement with HHSC or its agent to participate in the Medicaid program and must have a Texas Provider Identification Number ("TPIN"). All Providers, both CHIP and Medicaid, must have a National Provider Identifier ("NPI") in accordance with the timelines established in 45 CFR Part 162, Subpart D.

1.7 **Member Communications.** Health Plan is prohibited from imposing restrictions upon Provider's free communication with a Member about the Member's medical conditions, treatment options, Health Plan referral policies, and other Health Plan policies, including financial incentives or arrangements and all managed care plans with whom Provider contracts.

1.8 **Member Protections.** Provider must inform Health Plan of any reports of abuse, neglect, or exploitation made regarding a Member. This includes Provider self-reports and reports made by others that the Provider becomes aware of**.**

1.9 **Primary Care Providers.** The following provisions apply to providers credentialed by Health Plan, or Health Plan's designee, as Primary Care Providers ("PCP").

a. PCP shall have screening and evaluation procedures for detection and treatment of, or referral for, any known or suspected behavioral health problems and disorders.

b. PCP shall be accessible to Members twenty-four (24) hours per day, seven (7) days per week.

c. PCP shall provide preventive care: (i) to children under age twenty-one (21) in accordance with American Academy of Pediatrics recommendations for Members and CHIP perinatal newborns, and the THSteps periodicity schedule published in the THSteps Manual for Medicaid Members; and (ii) to adults in accordance with the U.S. Preventative Task Force requirements.

d. PCP shall assess the medical needs and behavioral health needs of Members for referral to specialty care providers and provide referrals as needed.

e. PCP must coordinate Members' care with specialty care providers after referral.

f. PCP will serve as a medical home for Members.

1.10 **Tuberculosis.** Provider shall coordinate with the local tuberculosis ("TB") control program to ensure that all Members with confirmed or suspected TB have a contact investigation and receive Directly Observed Therapy.

Provider shall report to the Texas Department of State Health Services ("DSHS") or the local TB control program any Member who is non-compliant, drug resistant, or who is or may be posing a public health threat.

1.11 **Women, Infants and Children.** Provider shall coordinate with the Women, Infants, and Children ("WIC") Special Supplemental Nutrition Program to provide medical information necessary for WIC eligibility determinations, such as height, weight, hematocrit, or hemoglobin.

1.12 **Standard of Care.** While performing the services described in this Agreement, Provider agrees to: (i) comply with applicable state laws, rules, and regulations, and HHSC's requests regarding personal and professional conduct generally applicable to the service locations; and (ii) otherwise conduct his or herself in a businesslike and professional manner.

1.13 **Confidentiality.** Provider shall treat all information that is obtained through the performance of the services included in this Agreement as confidential information to the extent that confidential treatment is provided under state and federal laws, rules, and regulations. This includes, but is not limited to, information relating to applicants or recipients of HHSC Programs. Provider shall not use information obtained through the performance of this Agreement in any manner except as is necessary for the proper discharge of obligations and securing of rights under this Agreement. Provider shall protect the confidentiality of Member Protected Health Information ("PHI"), including patient records. Provider must comply with all applicable federal and state laws, including the Health Insurance Portability and Accountability Act ("HIPAA") Privacy and Security Rule governing the use and disclosure of protected health information.

1.14 **Access to Records.**

a. Provider agrees to provide at no cost to HHSC: (i) all information required under Health Plan's contract with HHSC, including but not limited to, the reporting requirements and other information related to the Provider's performance of its obligations under the contract; and (ii) any information in its possession sufficient to permit HHSC to comply with the federal Balanced Budget Act of 1997 or other federal or state laws, rules, and regulations. All information must be provided in accordance with the timelines, definitions, formats, and instructions specified by HHSC.

b. Upon receipt of a record review request from the HHSC Office of Inspector General ("OIG") or another state or federal agency authorized to conduct compliance, regulatory, or program integrity functions, Provider must provide, at no cost to the requesting agency, the records requested within three (3) business days of the request. If the OIG or another state or federal agency representative reasonably believes that the requested records are about to be altered or destroyed or that the request may be completed at the time of the request or in less than twenty-four (24) hours, the provider must provide the records requested at the time of the request or in less than twenty-four (24) hours. The request for record review includes, but is not limited to: (i) clinical medical or dental Member records; (ii) other records pertaining to the Member; (iii) any other records of services provided to Medicaid or other health and human services program recipients and payments made for those services; (iv) documents related to diagnosis, treatment, service, lab results, charting; billing records, invoices, documentation of delivery items, equipment, or supplies; (v) radiographs and study models related to orthodontia services; (vi) business and accounting records with backup support documentation; (vii) statistical documentation; (viii) computer records and data; and/or (xi) contracts with providers and subcontractors. Failure to produce the records or make the records available for the purpose of reviewing, examining, and securing custody of the records may result in OIG imposing sanctions against the provider as described in 1 Tex. Admin. Code, Chapter 371, Subchapter G.

1.15 **Audit or Investigation.**

a. Provider agrees to provide, at no cost to the following entities and their designees, prompt, reasonable, and adequate access to the Agreement and any records, books, documents, and papers that are related to the Agreement and/or Provider's performance of its responsibilities under this Agreement: (i) the United States Department of Health and Human Services; (ii) the Comptroller General of the United States; (iii) Health Plan program personnel from HHS; (iv) the Office of Inspector General; (v) the Medicaid Fraud Control Unit of the Texas Attorney General's Office; (vi) any independent verification and validation contractor, audit firm, or quality assurance contractor acting on behalf of HHSC; (vii) the Office of the State Auditor of Texas; (viii) state or federal law enforcement agencies; (ix) special or general investigating committee of the Texas Legislature; and (x) any other state or federal entity identified by HHSC or any other entity engaged by HHSC.

b. Provider shall provide access wherever it maintains such records, books, documents, and papers. Provider shall provide such access in reasonable comfort and provide any furnishings, equipment, and other conveniences deemed reasonably necessary to fulfill the purposes described herein. Requests for access may be for, but are not limited to, the following purposes: (i) examination; (ii) audit; (iii) investigation; (iv) contract administration; (v) the making of copies, excerpts, or transcripts; or (vi) any other purpose HHSC deems necessary for contract enforcement or to perform its regulatory functions.

c. Provider understands and agrees that the acceptance of funds under this Agreement acts as acceptance of the authority of the State Auditor's Office ("SAO"), or any successor agency, to conduct an investigation in connection with those funds. Provider further agrees to cooperate fully with the SAO or its successor in the conduct of the audit or investigation, including providing all records requested at no cost.

1.16 **Complaints and Appeals.** Provider understands and agrees that HHSC reserves the right and retains the authority to make reasonable inquiry and to conduct investigations into Provider and Member complaints.

1.17 **Member Billing**.

a. Provider is prohibited from billing or collecting any amount from a Medicaid Member for health care services or dental services provided pursuant to this Agreement. Federal and state laws provide severe penalties for any provider who attempts to bill or collect any payment from a Medicaid recipient for a Covered Service.

b. Health Plan shall initiate and maintain any action necessary to stop a Provider or employee, agent, assign, trustee, or successor-in-interest from maintaining an action against HHSC, an HHS Agency, or any Member to collect payment from HHSC, an HHS Agency, or any Member, excluding payment for non-covered services. This provision does not restrict a CHIP provider from collecting allowable copayment and deductible amounts from CHIP Members. Additionally, this provision does not restrict a CHIP dental provider from collecting payment for services that exceed a CHIP Member's benefit cap.

1.18 **Costs of Non-Covered Services**. Providers shall inform Members of the costs for non-Covered Services prior to rendering such services and shall obtain a signed private pay form from such a Member.

1.19 **HHSC Liability**. Provider understands and agrees that HHSC is not liable or responsible for payment for Covered Services rendered pursuant to this Agreement.

1.20 **Third Party Recovery**. Provider shall not interfere with or place any liens upon the State's right or Health Plan's right, acting as the State's agent, to recovery from third party resources.

1.21 **Clean Claims Payment.** Health Plan shall adjudicate (finalize as paid or denied adjudicated) Clean Claims for: (i) Covered Service within thirty (30) days from the date the Claim is received by Health Plan; or (ii) pharmacy Covered Services, no later than eighteen (18) days from receipt if the Claim submitted electronically, or twenty-one (21) days of receipt if the Claim is submitted non-electronically. Health Plan shall pay Provider interest at a rate of eighteen (18) percent interest, per annum, on all Clean Claims that are not adjudicated within thirty (30) days. However, duplicate Claims filed prior to the expiration of thirty-one (31) days are not subject to any interest payment if not processed within thirty (30) days.

1.22 **Claims Processing.**

a. Health Plan shall compensate Provider pursuant to the terms of this Agreement. Provider may access the State of Texas Medicaid Fee-For-Service Program fee schedule at: www.Molinahealthcare.com.

b. Providers may:

i. Contact Molina Healthcare of Texas' Provider Services Department at 1-866-449-6849.

ii. Non-electronic claims should be mailed to:

Molina Healthcare of Texas, Inc.

P.O. Box: 22719

Long Beach, CA 90801

iii. Electronic claims can be sent to Health Plan via: www.Molinahealthcare.com

c. Health Plan shall notify Provider in writing of any changes in the claims processing or adjudication entity at least ninety (90) days prior to the effective date of change.

d. Provider must comply with the requirements of Texas Government Code 531.024161, regarding the submission of claims involving supervised providers.

e. Program violations arising out of performance of this Agreement are subject to administrative enforcement by the OIG as specified in 1 Tex. Admin. Code, Chapter 371, Subchapter G.

1.23 **Appeals of Claims Payment Decisions.** The timeframes for appeals of claims payment decisions shall be as follows: (i) In the event that Health Plan denies a Provider claim, Provider must submit a request for review of the denied claim within one hundred twenty (120) days of the initial denial; (ii) in the event that Provider believes Health Plan incorrectly paid a Provider claim, Provider must submit a request for correction or adjustment within one hundred twenty (120) days of the date of the remittance advice; and (iii) Health Plan will use its best efforts to resolve all disputed claims within thirty (30) days of receipt. The format for appeals of claims payment decisions shall be as follows: (i) the request must specify why the Provider believes Health Plan owes the payment; (ii) in the case of coordination of benefits, the request must include the name and mailing address of any entity that has disclaimed responsibility for payment; (iii) the request must be addressed to the attention of Health Plan's Provider Services Department; (iv) the request must clearly indicate "Denied Claims Review Request" or "Adjustment Request;" and (v) the request must include all pertinent information, including, but not limited to, claim number, Member identifier, denial letter, supporting medical records, and any new information pertinent to the request.

1.24 **Compliance with Applicable Law**.

a. Provider understands and agrees that it is subject to all state and federal laws, rules, regulations, waivers, policies and guidelines, and court-ordered consent decrees, settlement agreements, or other court orders that apply to this Agreement, the UMCC, Health Plan's health benefits programs, and all persons or entities receiving state and federal funds. Provider understands and agrees that any violation by Provider of a state or federal law relating to the delivery of services pursuant to this Agreement, or any violation Health Plan's contract with HHSC could result in liability for money damages, and/or civil or criminal penalties and sanctions under state and/or federal law.

b. In addition, Provider understands and agrees that the following laws, rules, and regulations, and all amendments or modifications thereto, apply to this Agreement:

i. Environmental Protection Laws: Pro-Children Act of 1994 (20 USC 6081 et seq.) regarding the provision of a smoke-free workplace and promoting the non-use of all tobacco products; National Environmental Policy Act of 1969 (42 USC 4321 et seq.) and Executive Order 11514 ("Protection and Enhancement of Environmental Quality") relating to the institution of environmental quality control measures; Clean Air Act and Water Pollution Control Act regulations (Executive Order 11738, "Providing for Administration of the Clean Air Act and Federal Water Pollution Control Act with Respect to Federal Contracts, Grants, and Loans"); State Clean Air Implementation Plan (42 USC 740 et seq.) regarding conformity of federal actions to State Implementation Plans under Sec.176(c) of the Clean Air Act; and Safe Drinking Water Act of 1974 (21 USC 349; 42 USC 300f to 300j-9) relating to the protection of underground sources of drinking water;

ii. State and Federal Anti-Discrimination Laws: Title VI of the Civil Rights Act of 1964 (42 USC 2000d et seq.) and as applicable 45 CFR Part 80 or 7 CFR Part 15; Section 504 of the Rehabilitation Act of 1973 (29 USC 794); Americans with Disabilities Act of 1990 (42 USC 12101 et seq.); Age Discrimination Act of 1975 (42 USC 6101-6107); Title IX of the Education Amendments of 1972 (20 USC 1681-1688); Food Stamp Act of 1977 (7 USC 200 et seq.); Executive Order 13279, and its implementing regulations at 45 CFR Part 87 or 7 CFR Part 16 and Title 40: and the HHS agency's administrative rules, as set forth in the Texas Administrative Code, to the extent applicable to this Agreement;

iii. The Immigration and Nationality Act (8 USC 1101 et seq.) and all subsequent immigration laws and amendments;

iv. The Health Insurance Portability and Accountability Act of 1996 (Public Law 104-191); and

v. The Health Information Technology for Economic and Clinical Health Act at 42 USC 17931 et. seq.

1.25 **Fraud and Abuse**.

a. Provider understands and agrees to the following: (i) the OIG and/or the Texas Medicaid Fraud Control Unit shall be allowed to conduct private interviews of Provider and its employees, agents, contractors, and patients; (ii) requests for information from such entities shall be complied with, in the form and language requested; (iii) Provider and its employees, agents, and contractors shall cooperate fully with such entities in making themselves available in person for interviews, consultation, grand jury proceedings, pre-trial conference, hearings, trials and in any other process, including investigations; and (iv) compliance with these requirements will be at the Provider's own expense.

b. Provider further understands and agrees to the following: (i) Provider is subject to all state and federal laws and regulations relating to fraud, abuse, or waste in health care or dental care and the Medicaid and/or CHIP Programs, as applicable; (ii) Provider shall cooperate and assist HHSC and any state or federal agency that is charged with the duty of identifying, investigating, sanctioning, or prosecuting suspected fraud, abuse, or waste; (iii) Provider shall provide originals and/or copies of any and all information as requested by HHSC or the state or federal agency, allow access to premises, and provide records to the OIG, HHSC, CMS, the U.S. Department of Health and Human Services, Federal Bureau of Investigation, Texas Department of Insurance, the Texas Attorney General's Medicaid Fraud Control Unit or other unit of state or federal government, upon request, and free-of-charge; (iv) if Provider places required records in another legal entity's records, such as a hospital, Provider is responsible for obtaining a copy of these records for use by the above-named entities or their representatives; and (v) Provider shall report any suspected fraud or abuse including any suspected fraud and abuse committed by the Health Plan or a Member to the OIG.

c. If the Provider receives annual Medicaid payments of at least five (5) million (cumulative, from all sources), Provider must:

   i. Establish written policies for all employees, managers, officers, contractors, subcontractors, and agents of the Provider. The policies must provide detailed information about the False Claims Act, administrative remedies for false claims and statements, any state laws about civil or criminal penalties for false claims, and whistleblower protections under such laws, as described in Section 1902(a)(68)(A) of the Social Security Act.

   ii. Include as part of such written policies, detailed provisions regarding the Provider's policies and procedures for detecting and preventing fraud, waste, and abuse.

   iii. Include in any employee handbook a specific discussion of the laws described in Section 1902(a)(68)(A) of the Social Security Act, the rights of employees to be protected as whistleblowers, and the Provider's policies and procedures for detecting and preventing fraud, waste, and abuse.

1.26 **Gifts and Gratuities.** Provider shall not offer or give anything of value to an officer or employee of HHSC or the State of Texas in violation of state law. A "thing of value" means any item of tangible or intangible property that has a monetary value of more than fifty dollars ($50.00) and includes, but is not limited to, cash, food, lodging, entertainment and charitable contributions. The term does not include contributions to public office holders or candidates for public office that are paid and reported in accordance with state and/or federal law. Health Plan may terminate this Agreement at any time for violation of this provision.

1.27 **Termination**. Health Plan shall provide a written explanation of the reasons for Provider's termination at least ninety (90) days before the effective date of the proposed termination. Health Plan may immediately terminate a Provider in cases involving: (i) imminent harm to patient health; (ii) an action by a state medical or dental board, another medical or dental licensing board, or another licensing board or government agency that effectively impairs the Provider's ability to practice medicine, dentistry, or another profession; or (iii) fraud or malfeasance. Not later than thirty (30) days following receipt of the termination notice, Provider may request a review of Health Plan's proposed termination by an advisory review panel. A provider whose participation is being terminated is entitled to an expedited review by Health Plan upon request. Within sixty (60) days following receipt of Provider's request and before the termination effective date, the advisory review panel will make its formal recommendation. Health Plan will communicate the advisory review panel decision to Provider and, upon Provider's request, Health Plan will provide a copy of the recommendation. The advisory review panel decision is not binding upon Health Plan.

1.28 **Complaint Process.**

a. **Complaints.**

i. Provider shall submit any dispute, other than any dispute relating to payment or non-payment of a claim, to Health Plan in writing within sixty (60) days of when the issue arises.

ii. Provider shall submit such disputes to the attention of Health Plan's Provider Services Department.

b. **Health Plan Response.**

i. Health Plan shall use best efforts to acknowledge by phone, e-mail, or other writing, receipt of a dispute, other than any dispute relating to payment or non-payment of a claim, within five (5) business days.

ii. Health Plan shall investigate and resolve disputes within thirty (30) days of Health Plan's receipt of Provider's written correspondence.

iii. Health Plan's decision regarding disputes shall be communicated within thirty (30) days of Health Plan's receipt of Provider's written correspondence requesting review. If additional time is required, Health Plan shall communicate this information to Provider within thirty (30) days.

1.29 **Administrative Requirements.** Providers must inform both Health Plan and HHSC's administrative services contractor of any changes to Provider's address, telephone number, and group affiliation.

1.30 **Product Orders.** If Provider offers delivery services for covered products, such as durable medical equipment ("DME"), limited home health supplies ("LHHS"), or outpatient drugs or biological products, Provider must reduce, cancel, or stop delivery if Member or the Member's authorized representative submits an oral or written request. Provider must maintain records documenting the request.

1.31 **Insurance.** Provider shall maintain, during the term of this Agreement, Professional Liability Insurance of one hundred thousand dollars ($100,000.00) per occurrence and three hundred thousand dollars ($300,000.00) in the aggregate, or the limits required by the hospital at which Provider has admitting privileges.

1.32 **Quality Improvement Program.** Provider shall participate in Health Plan's Quality Improvement Program and activities, including peer review and audits of care rendered by Provider.

1.33 **Service Coordination.** In addition to the requirements stated herein, the following provisions are specific to and apply to, as applicable, STAR MCO, STAR+PLUS MCO, STAR Health MCO, and STAR Kids Members.

a. Home and Community Support Services Agency ("HCSSA") providers, adult day care providers, and residential care facility providers must notify Health Plan if a Member experiences any of the following: (i) a significant change in the Member's physical or mental condition or environment; (ii) hospitalization; (iii) an emergency room visit; or (iv) two or more missed appointments.

b. Providers using the Electronic Visit Verification system must maintain compliance with HHSC minimum standards detailed in UMCM, Chapter 8.7, Section IX.

1.34 **Waiting Times**. Providers must provide services within the timeframes that are a noted within Health Plan's Provider Manual.

1.35 **STAR and STAR+PLUS.** In addition to the requirements stated herein, the following provisions are specific to and apply to , as applicable, STAR MCO, STAR+PLUS MCO, STAR Health MCO, and STAR Kids Members.

a. **Family Planning.**

i. If a Member requests contraceptive services or family planning services, Provider must also provide the Member counseling and education about family planning and available family planning services.

ii. Provider shall not require parental consent for Members who are minors to receive family planning services.

iii. Provider shall comply with state and federal laws and regulations governing Member confidentiality (including minors) when providing information on family planning services to Members.

b. **THSteps.** Provider shall send all THSteps newborn screens to DSHS, formerly the Texas Department of Health, Bureau of Laboratories or a DSHS-certified laboratory. Provider shall include detailed identifying information

for all screened newborn Members and each Member's mother to allow HHSC to link the screens performed at the hospital with screens performed at the two-week follow-up.

c. **Mental Health.** Providers must comply with 25 Tex. Admin. Code, Part 1, Chapter 415, Subchapter F, "Interventions in Mental Health Services," when providing Mental Health Rehabilitative Services and Mental Health Targeted Case Management.

d. **Advance Directives.** Provider shall comply with the requirements of state and federal laws, rules, and regulations relating to advance directives, including but not limited to, the Patient Self-Determination Act (Section 4751 of the Omnibus Reconciliation Act of 1990), as amended.

e. **Lead Screening**. In accordance with Texas Health & Safety Code Chapter 88 and related rules at 25 Tex. Admin. Code Chapter 37, Subchapter Q, Providers must: (i) report all blood lead results to the Childhood Lead Poisoning Program (if not performed at the DSHS state laboratory); and (ii) follow-up on suspected or confirmed cases of childhood lead exposure with the Childhood Lead Poisoning Prevention Program, and follow the Centers for Disease Control and Prevention guidelines for testing children for lead and follow-up actions for children with elevated lead levels located at www.dshs.state.tx.us/lead/pdf_files/pb_109_physician_reference.pdf.

1.36 **Pharmacy**

a. Health Plan will not impose restrictions on Medicaid/CHIP pharmacy providers' enrollment in Medicaid/CHIP as a condition to enroll in other lines of business.

b. Health Plan will not implement significant, non-negotiated, across-the-board provider reimbursement rate reductions unless prior approval has been obtained by HHSC.

c. Health Plan must ensure reasonable pharmacy provider reimbursement rates include a dispensing fee, administration fees (when applicable), and ingredient costs.

d. Health Plan must follow the requirements in applicable contracts regarding reimbursement for pharmacy providers.

e. Health Plan must ensure that they and their Subcontractors do not prohibit pharmacy providers from disclosing any information regarding the pharmacy provider agreement to HHSC.

f. Health Plan must ensure that pharmacy provider processes and procedures must be provided in a separate Texas Medicaid section specific to Medicaid and CHIP only.

g. This Agreement will not permit, nor will it be construed to permit: :

i. Pharmacy provider rate reductions without HHSC notification of approval as required under HHSC UMCM Section 8.1.4.8;

ii. Reconciliation methodologies that include Medicaid or CHIP claims';

iii. Mechanisms that facilitate "spread pricing," including pharmacy provider reimbursement clawbacks or discounts; or

iv. Pharmacy Benefit Manager ("PBM") restrictions that are greater than those required by HHSC for Medicaid/CHIP participation.

h. Unless directed by HHSC, Health Plan and its PBM are prohibited from implementing an aggregate reconciliation process after the point-of-sale transaction such that the final cost of drugs for payors is changed or the price paid to pharmacy providers is changed. Such prohibition includes aggregate reconciliation processes for additional fees, contracted effective rate agreements, payment reductions, and the recoupments of funds based on financial performance measures. This prohibitive language does not apply to audit-related claim reviews, approved Alternative Payment Modes, or Fraud, Waste, and Abuse investigations.

i. Health Plan must provide a Network pharmacy the sources used to determine the MAC pricing at contract execution, renewal, and upon request. Health Plan may not use as a pricing source provider performance standards, provider network performance standards, or effective rate agreements.

j. Please consult the Texas Medicaid Provider Procedures Manual, Durable Medical Equipment ("DME") and

Comprehensive Care Program ("CCP") sections, and Molina Texas Medicaid Provider Manual Pharmacy Chapter for information regarding the scope of coverage of DME and other products commonly found in a pharmacy. For qualified children, this includes Medically Necessary over-the-counter drugs, diapers, disposable/expendable medical supplies, and some nutritional products. It also includes Medically Necessary nebulizers, ostomy supplies or bed pans, and other supplies and equipment for all qualified Members. Molina Healthcare of Texas encourages your pharmacy's participation in providing these items to Medicaid clients.

1.37 **CHIP.** In addition to the requirements stated herein, the following provisions are specific to and apply to CHIP Members.

a. Provider is responsible for collecting at the time of service any applicable CHIP copayments or deductibles in accordance with CHIP cost-sharing limitations.

b. Providers shall not charge: (i) cost-sharing or deductibles to CHIP Members of Native American Tribes or Alaskan Natives; (ii) copayments or deductibles to a CHIP Member with an ID card that indicates the Member has met his or her cost-sharing obligation for the balance of their term of coverage; (iii) copayments for well-child or well-baby visits or immunizations (CHIP MCO and CHIP RSA); or (iv) copayments for routine preventive and diagnostic dental services (CHIP Dental).

c. Copayments are the only amounts that Network Providers may collect from CHIP Members, except for costs associated with unauthorized nonemergency services provided to a Member by out-of-network providers for non-covered services.

ATTACHMENT E

Medicare Advantage

Laws and Government Program Requirements

This attachment sets forth applicable Laws and Government Program Requirements, or other provisions necessary to reflect compliance for the Medicare Advantage Product. This attachment will be automatically modified to conform to subsequent changes to Laws or Government Program Requirements. All provisions of the Agreement not specifically modified by this attachment remain unchanged and will control. In the event of a conflict between this attachment and any other provision in the Agreement, the provisions in this attachment will control for the Medicare Advantage Product. Capitalized terms used in this attachment will have the same meaning ascribed to them in the Agreement unless otherwise set forth in this attachment. Any purported modification or any provision in this attachment that is inconsistent with a Law or Government Program Requirement will not be effective and will be interpreted in a manner that is consistent with the applicable Law and Government Program Requirement. This attachment only applies to Medicare Advantage Product.

1.1 **Definitions.**

a. **Completion of Audit** means a completion of audit by The U.S. Department of Health and Human Services ("HHS"), the Government Accountability Office, or their designees of a Medicare Advantage Organization, Medicare Advantage Organization contractor or Related Entity.

b. **Downstream Entity** means any party that enters into a written arrangement, acceptable to CMS, with persons or entities involved with the Medicare Advantage benefit, below the level of the arrangement between a Medicare Advantage Organization (or applicant) and a First Tier Entity. These written arrangements continue down to the level of the ultimate provider for health and administrative services.

c. **Final Contract Period** means the final term of the contract between CMS and the Medicare Advantage Organization.

d. **First Tier Entity** means any party that enters into a written arrangement, acceptable to CMS, with a Medicare Advantage Organization or applicant to provide administrative services or health care services for a Medicare eligible individual under the Medicare Advantage program.

e. **Medicare Advantage Organization** means a public or private entity organized and licensed by a State as a risk-bearing entity (with the exception of provider-sponsored organizations receiving waivers) that is certified by CMS as meeting the Medicare Advantage contract requirements.

f. **Related Entity** means any entity that is related to the Medicare Advantage Organization by common ownership or control and: (i) performs some of the Medicare Advantage Organization's management functions under contract or delegation; (ii) furnishes services to Medicare enrollees under an oral or written agreement; or (iii) leases real property or sells materials to the Medicare Advantage Organization at a cost of more than $2,500 during a contract period.

1.2 **Right to Audit.** HHS, the Comptroller General, or their designees have the right to audit, evaluate, collect, and inspect any pertinent information for any particular contract period, including, but not limited to, any books, contracts, computer or other electronic systems (including medical records and documentation of the First Tier Entity, Downstream Entity, and Related Entity, through ten (10) years from the final date of the Final Contract Period of the contract entered into between CMS and the Medicare Advantage Organization or from the date of completion of any audit, whichever is later.

1.3 **Right to Audit Directly from FDR.** HHS, the Comptroller General, or their designees have the right to audit, evaluate, collect, and inspect any records under Section 1.2, of this attachment, directly from any First Tier Entity, Downstream Entity, and Related Entity. For records subject to review under Section 1.2, except in exceptional circumstances, CMS will provide notification to the Medicare Advantage Organization that a direct request for information has been initiated.

1.4 **Confidentiality.** Provider will comply with the confidentiality and Member record accuracy requirements, including: (i) abiding by all Laws regarding confidentiality and disclosure of medical records, or other health and enrollment information; (ii) ensuring that medical information is released only in accordance with applicable Law,

or pursuant to court orders or subpoenas; (iii) maintaining the records and information in an accurate and timely manner; and (iv) ensuring timely access by Members to the records and information that pertain to them.

1.5 **Hold Harmless.** Members will not be held liable for payment of any fees that are the legal obligation of the Medicare Advantage Organization.

1.6 **Cost-Sharing.** For all Members eligible for both Medicare and Medicaid, Members will not be held liable for Medicare Part A and B cost sharing when the State is responsible for paying such amounts. Provider will be informed of Medicare and Medicaid benefits and rules for enrollees eligible for Medicare and Medicaid. Provider may not impose cost-sharing that exceeds the amount of cost-sharing that would be permitted with respect to the individual under title XIX if the individual were not enrolled in such a plan. Provider will: (i) accept the Health Plan payment as payment in full; or (ii) bill the appropriate State source.

1.7 **Delegation.** Any services or other activity performed in accordance with a contract or written agreement by Provider or a Downstream Entity of Provider must be consistent and comply with the Medicare Advantage Organization's contractual obligations.

1.8 **Prompt Payment.** Health Plan will pay Provider for Clean Claims for Covered Services, that are determined to be payable, in accordance with Laws, Government Program Requirements, and this Agreement. Health Plan will make such payment within sixty (60) days.

1.9 **Compliance with Medicare Laws.** Provider will comply with all applicable Medicare Laws, regulations, and CMS instructions.

1.10 **Benefit Continuation.** Provider agrees to provide for continuation of Member health care benefits: (i) for all Members, for the duration of the period for which CMS has made payments to Health Plan for Medicare services; and (ii) for Members who are hospitalized on the date Health Plan’s contract with CMS terminates, or, in the event of insolvency, through discharge

1.11 **Accountability.** Health Plan may only delegate activities or functions to a First Tier Entity or Downstream Entity in a manner that is consistent with the requirements set forth in Health Plan’s contractual obligations.

1.12 **Reporting**. Provider agrees to provide relevant data to support Health Plan in complying with the requirements set forth in 42 CFR 422.516 and 42 CFR 422.310.

ATTACHMENT F

Medicare-Medicaid Program

Laws and Government Program Requirements

This attachment sets forth applicable Laws and Government Program Requirements, or other provisions necessary to reflect compliance for the MMP Product. This attachment will be automatically modified to conform to subsequent changes to Laws or Government Program Requirements. All provisions of the Agreement not specifically modified by this attachment remain unchanged and will control. In the event of a conflict between this attachment and any other provision in the Agreement, the provisions in this attachment will control MMP Product. Capitalized terms used in this attachment will have the same meaning ascribed to them in the Agreement unless otherwise set forth in this attachment. Any purported modification or any provision in this attachment that is inconsistent with a Law or Government Program Requirement will not be effective and will be interpreted in a manner that is consistent with the applicable Law and Government Program Requirement. This attachment only applies to the MMP Product.

1.1 **Definitions.**

a. **Clean Claim** means a claim submitted by a Provider for health care services rendered to a Member, with the data necessary for the Health Plan to adjudicate and accurately report the claim. A Clean Claim other than a nursing facility services Clean Claim must meet all requirements for accurate and complete data as defined in the appropriate claim type encounter guides as follows: (i) 837 Professional Combined Implementation Guide; (ii) 837 Institutional Combined Implementation Guide; (iii) 837 Professional Companion Guide; (iv) 837 Institutional Companion Guide; or (v) National Council for Prescription Drug Programs ("NCPDP") Companion Guide.

b. **Emergency Medical Condition** means a medical condition manifesting itself by acute symptoms of recent onset and sufficient severity (including but not limited to severe pain, psychiatric disturbances and/or symptoms of substance abuse) that a prudent layperson, who possesses an average knowledge of health and medicine, could reasonably expect the absence of immediate medical attention to result in placing the health of the individual (or with respect to a pregnant woman, the health of the woman or her unborn child) in serious jeopardy, serious impairment to body functions, or serious dysfunction of any bodily organ or part; or with respect to a pregnant woman who is having contractions, (i) that there is inadequate time to effect a safe Transfer to another hospital before delivery, or (ii) that Transfer may pose a threat to the health or safety of the woman or the unborn child.

c. **Emergency Services** means covered inpatient and outpatient services that are as follows: (i) furnished by a provider that is qualified to furnish these services under this title; and (ii) needed to evaluate or stabilize an emergency medical condition.

d. **Medically Necessary or Medical Necessity** means Covered Services must be provided in a way that provides all protections to covered individuals provided by Medicare and Texas Medicaid. Services must be reasonable and necessary for the diagnosis or treatment of illness or injury or to improve the functioning of a malformed body member, or otherwise medically necessary under 42 U.S.C. §1395 (per Medicare); and has meaning assigned in Texas Administrative Code (TAC) Section 353.2 (per HHSC).

e. **Post Stabilization Care Services** means Covered Services, related to an Emergency Medical Condition that are provided after a Member is stabilized in order to maintain the stabilized condition, or, for a Member, under the circumstances described in 42 CFR 438.114(b)&(e) and 42 CFR 422.113(c)(iii) to improve or resolve the Member's condition.

1.2 **Downstream Compliance.** Provider and its Downstream Entity(s) agree that any functions being performed on behalf of Health Plans related to the operation of the Medicare-Medicaid plan are in compliance with 42 CFR 422.504, 42 CFR 423.505, and 42 CFR 438.6(1).

1.3 **Right to Audit.** CMS, HHSC, HHS, Comptroller General, and other state and federal department/agencies, as well as their agents and designees, have the right to audit, evaluate, and inspect any pertinent information, including but not limited to, books, contracts, records, medical records, and documentation that pertain to any aspect of services performed, reconciliation of benefit liabilities, and determination of amounts payable under Health Plan's contract

with CMS and HHSC, or as the appropriate regulatory department/agency may deem necessary to enforce Health Plan's contract with CMS and HHSC. Provider agrees to make available, for the purposes specified in this paragraph, its premises, physical facilities and equipment, as well as pertinent information relating to its Members, and any additional relevant information that CMS, HHSC, HHS, Comptroller General, and other state and federal department/agencies, as well as their agents and designees, may require. These rights to inspect evaluate, and audit extends through ten (10) years from the end of the final contract period between Health Plan and CMS and HHSC or completion of audit, whichever is later.

1.4 **Confidentiality.** Provider agrees to safeguard Member privacy and the confidentiality of Member health records. Provider will abide by all federal and state laws and regulations regarding confidentiality and disclosure of medical records, and other health and enrollment information. Provider must ensure that medical information is released in accordance with applicable federal or state laws, and pursuant to court orders and subpoenas. Providers must maintain Member medical records and information in an accurate and timely manner. Providers must ensure timely access by Members to the records and information that pertain to them.

1.5 **Hold Harmless/Cost Sharing.** Provider agrees it may not under any circumstance, including but not limited to, nonpayment of moneys due to Provider by Health Plan, insolvency of the Health Plan, or breach of this Agreement, bill, charge, collect a deposit, seek compensation, remuneration, or reimbursement from, or have any recourse against the Member, or any persons other than the Health Plan acting on their behalf, for services provided in accordance with this Agreement. This Hold Harmless clause will survive the termination of this Agreement, regardless of the cause of termination. In addition:

a. Members will not be held liable for any Medicare Part A and B cost sharing. Specifically, Medicare Parts A and B services will be provided at zero-cost share to the Member.

b. Notwithstanding the foregoing, Provider may bill Members for Part D pharmacy co-payments, if applicable.

1.6 **Accountability.** Health Plan may only delegate activities or functions to a Downstream Entity(s) in a manner that is consistent with the provisions set forth in Attachment E-1 of this Agreement.

1.7 **Delegation.** Any service or other activity performed by a Downstream Entity(s), which is performed pursuant to a contract or written agreement between Provider and the Downstream Entity(s), will be consistent and comply with the Health Plan's contract with CMS and HHSC, and the terms of this Agreement.

1.8 **Claims Payment.**

a. Notwithstanding any other provision of this Agreement, Health Plan shall not make any payment or pay any Claim, nor does Health Plan have any obligation to make any payment or pay any Claim, to a Provider:

i. Excluded, terminated, or suspended from the Medicare program, Medicaid program, or other state or federally funded health care programs. This includes, but is not limited to, Providers excluded for fraud, abuse, or waste;

ii. For a provider preventable condition as defined in 42 CFR 447.26(b);

iii. That has not complied with reporting requirements on provider preventable conditions as described at 42 CFR 447.26(d), or by Health Plan or HHSC;

iv. On payment hold under the authority of HHSC, CMS, or its authorized agent(s);

v. With pending accounts receivable with HHSC or CMS; or

vi. For nursing facility services that do not comply with HHSC criteria for clean claim.

b. Providers must comply with the requirements of Texas Government Code §531.024161, regarding reimbursement of claims based on orders or referrals by supervising providers to be eligible for payment.

c. Health Plan may suspend payments to Provider if the OIG, HHSC, or CMS determines there is a credible allegation of fraud for which an investigation is pending under the Medicaid or Medicare program against Provider.

1.9 **Reporting.** Provider agrees to provide relevant data to support Health Plan in complying with the requirements set forth in Health Plan's contract with CMS and HHSC. When applicable, Provider must provide all information that

CMS and HHSC require:

a. Under Health Plan's contract with CMS and HHSC related to the performance of the responsibilities under the MMP Program, including non-medical information for the purposes of research and evaluation;

b. To comply with applicable federal or state laws and regulations; or

c. For external rapid cycle evaluation, including but not limited to, program expenditures, service utilization rates, rebalancing from institutional to community settings, Member satisfaction, Member complaints and appeals, and enrollment/disenrollment rates.

1.10 **Compliance with Laws and Regulations**. Provider will comply with all federal and state laws, regulations, and CMS and HHSC instructions. This includes, but is not limited to, laws, regulations, and instructions that pertain to the Medicare and Medicaid programs.

1.11 **Benefit Continuation.** Provider agrees to provide for the continuation of Member health care benefits: (i) for all Members for the duration of the period for which CMS or HHSC has made payments to Health Plan for MMP services; and (ii) for Members who are hospitalized on the date Health Plan's contract with CMS and HHSC terminates, or, in the event of insolvency, through discharge.

1.12 **Cultural Considerations.** Provider agrees that services are provided in a culturally competent manner to all Members, including those with limited English proficiency or reading skills, and diverse cultural and ethnic backgrounds.

1.13 **Corrective Action.** Health Plan monitors Provider performance under this Agreement on an ongoing basis and Health Plan may impose corrective action as necessary to address instances of noncompliance.

1.14 **Federal Emergency Medical Treatment and Labor Act.** As applicable to Provider, Provider must comply with the Federal Emergency Medical Treatment and Labor Act ("EMTALA") and all requirements outlined in 42 USC 1395dd. Health Plan will not create any policies that conflict with the Provider's obligations under EMTALA.

1.15 **Physician Incentive Plans.** Provider shall comply with all applicable requirements governing physician incentive plans, including but not limited to, 42 CFR 417, 42 CFR 422, 42 CFR 434, 42 CFR 438.6(h), and 42 CFR 1003.

1.16 **Indemnification.** Provider is not required to indemnify Health Plan for any expenses and liabilities, including without limitation, judgments, settlements, attorney's fees, court costs, and any associated charges, incurred in connection with any claim or action brought against Health Plan based on Health Plan's management decisions, utilization review provisions or other policies, guidelines or actions. For the avoidance of doubt, nothing in this section creates any conflict with the Section 6.1, Indemnification, in the Agreement.

1.17 **Provider Participation.**

a. Provider may not close or otherwise limit its acceptance of Members as patients unless the same limitations apply to all commercially insured individuals.

b. Providers will comply with Health Plan's requirements for the delivery of preventive health services.

c. Provider shall provide to Health Plan all state and federally required disclosures and comply with state and federal requirements for disclosure of ownership and control, business transactions, and information of persons convicted of crimes against federal and state health care programs as described in 42 CFR. 455, 42 CFR. 1002.3, and as specified by HHSC and CMS.

d. Provider shall offer hours of operation that are no less than the hours of operation offered to individuals who are not MMP Members.

e. Provider must notify the Member's PCP of a Member's screening and treatment.

f. If a Member files a grievance with Provider, Provider must promptly forward it to Health Plan. Provider will be bound by the terms and conditions of the Health Plan's contract with CMS and HHSC that are appropriate to the service or activity Provider is performing pursuant to this Agreement.

g. Provider is required to meet the same federal and state financial and program reporting requirements as Health Plan. Provider is required to attend annual fraud detection training as provided by HHSC.

1.18 **Provider Protection.**

a. Health Plan may not refuse to contract or pay a Provider for the provision of Covered Services solely because such Provider has in good faith:

i. Communicated with or advocated on behalf of one (1) or more of his or her prospective, current, or former patients regarding the provisions, terms, or requirements of Health Plan's benefit plans as they relate to the needs of such Provider's patients; or

ii. Communicated with one (1) or more of his or her prospective, current, or former patients with respect to the method by which such Provider is compensated by Health Plan for services provided to the patient.

b. Health Plan shall notify Providers in writing of modifications in payments, modifications in Covered Services, or modifications in Health Plan's procedures, documents, or requirements, including those associated with utilization review, quality management and improvement, credentialing, and preventive health services, that have a substantial impact on the rights or responsibilities of Provider, and the effective date of the modifications. The notice shall be provided thirty (30) days before the effective date of such modification unless such other date for notice is mutually agreed upon between Health Plan and the Provider or unless such change is mandated by CMS or HHSC without thirty (30) days prior notice.

c. Health Plan may not impose a financial risk on medical Providers for the costs of medical care, services, or equipment provided or authorized by another physician or health care provider unless such contract includes specific provisions with respect to the following:

i. Stop-loss protection;

ii. Minimum patient population size for the physician or physician group; and

iii. Identification of the health care services for which the physician or physician group is at risk.

1.19 **Laboratory Providers**. Laboratory testing sites must have either a Clinical Laboratory Improvement Amendment ("CLIA") certificate or waiver of a certificate of registration along with a CLIA identification number.

1.20 **Primary Care Providers.** The following provisions apply to Providers credentialed by Health Plan, or Health Plan's designee, as Primary Care Providers ("PCP").

a. PCPs shall have screening and evaluation procedures for the detection and treatment of, or referral for, any known or suspected behavioral health problems and disorders. PCPs may provide any clinically appropriate behavioral health services within the scope of their practice.

b. Provider must attend trainings on how to screen for and identify behavioral health disorders, on Health Plan's referral process for behavioral health services, and on clinical coordination requirements for such services.

c. Provider must attend trainings on coordination and quality of care such as behavioral health screening techniques and models of behavioral health interventions.

d. Health Plan will develop and disseminate policies regarding clinical coordination between behavioral health service providers and PCPs.

1.21 **Behavioral Health Services Providers.** The following provisions apply to Providers providing behavioral health services to Members.

a. Provider must refer Members with known or suspected and untreated physical health problems or disorders to their PCP for examination and treatment, with the Member's or the Member's Legally Authorized Representative's ("LAR") consent. Behavioral health Providers may only provide physical health care services if they are licensed to do so.

b. Providers shall send initial and quarterly (or more frequently if clinically indicated) summary reports of a Members' behavioral health status to the PCP, with the Member's or the Member's LAR's consent.

c. Members receiving inpatient psychiatric services must be scheduled for outpatient follow-up or continuing treatment prior to discharge. The outpatient treatment must occur within seven (7) days from the date of discharge.

d. Providers must contact Members who have missed appointments within one (1) business day to reschedule appointments.

e. Providers shall make available behavioral health clinical assessment and outcomes data for quality management and network management purposes to Health Plan.

1.22 **Nursing Facilities.** The following provisions apply to nursing facilities.

a. Nursing facility must use state and federally-required assessment instruments, as amended or modified, to assess Members and to supply current medical information for Medical Necessity determinations.

b. Nursing facility will promptly supply these assessments to Health Plan.

1.23 **Agreement Review.** HHSC and CMS retain the right to reject or require changes to this Agreement if it does not comply with STAR+PLUS MMP requirements or Health Plan's contract with CMS and HHSC. Health Plan may amend this Agreement to ensure compliance with this requirement.

1.24 **Program Violations.** Violations arising out of performance of this Agreement are subject to administrative enforcement by the OIG as specified in 1 T.A.C., Chapter 371, Subchapter G.

Article II

In the event of any inconsistency or conflict between Article I and Article II of this attachment, Article I shall control.

2.1 **Definitions.**

a. **Clean Claim** means a claim submitted by a Provider for health care services rendered to a Member, with the data necessary for the Health Plan to adjudicate and accurately report the claim. A Clean Claim other than a nursing facility services Clean Claim must meet all requirements for accurate and complete data as defined in the appropriate claim type encounter guides as follows: (i) 837 Professional Combined Implementation Guide; (ii) 837 Institutional Combined Implementation Guide; (iii) 837 Professional Companion Guide; (iv) 837 Institutional Companion Guide; or (v) National Council for Prescription Drug Programs ("NCPDP") Companion Guide.

b. **Emergency Behavioral Health Condition** means any condition, without regard to the nature or cause of the condition, which in the opinion of a prudent layperson possessing an average knowledge of health and medicine: (i) requires immediate intervention and/or medical attention without which Members would present an immediate danger to themselves or others; or (ii) renders Members incapable of controlling, knowing, or understanding the consequences of their actions.

c. **Emergency Medical Condition** means a medical condition manifesting itself by acute symptoms of recent onset and sufficient severity (including severe pain), such that a prudent layperson, who possesses an average knowledge of health and medicine, could reasonably expect the absence of immediate medical care could result in: (i) placing the patient's health in serious jeopardy; (ii) serious impairment to bodily functions; (iii) serious dysfunction of any bodily organ or part; (iv) serious disfigurement; or (v) in the case of a pregnant women, serious jeopardy to the health of a woman or her unborn child.

d. **Emergency Services** means covered inpatient and outpatient services furnished by a provider that is qualified to furnish such services under the Agreement and that are needed to evaluate or stabilize an Emergency Medical Condition and/or an Emergency Behavioral Health Condition, including Post-Stabilization Care Services.

e. **Medically Necessary or Medical Necessity (for Medicaid product/program)** has the meaning defined in 1 TAC §353.2.

f. **Medically Necessary or Medical Necessity (for CHIP product/program)** has the meaning defined in 1 TAC §370.4.

g. **Post Stabilization Care Services** means Covered Services, related to an Emergency Medical Condition that are provided after a Member is stabilized in order to maintain the stabilized condition, or, for a Medicaid Member, under the circumstances described in 42 §§CFR 438.114(b)&(e) and 42 CFR §422.113(c)(iii) to improve or resolve the Medicaid Member's condition.

2.2 **Behavioral Health.**

a. If Providers provides inpatient psychiatric services to Members, Provider must schedule Members for outpatient follow-up or continuing treatment prior to discharge. The outpatient treatment must occur within seven (7) days from the date of discharge. Behavioral health providers must contact Members who have missed appointments within twenty-four (24) hours to reschedule appointments.

b. If Providers provides behavioral or physical health (including Primary Care Providers, OB/GYNs, internists, and other relevant provider types), Provider must share amongst each other clinical information regarding Members with co-occurring behavioral and physical health conditions, to the extent allowed by federal Law.

2.3 **Early Childhood Intervention.** Providers must cooperate and coordinate with local Early Childhood Intervention ("ECI") programs to comply with federal and state requirements relating to the development, review, and evaluation of Individual Family Service Plans ("IFSP"). Provider understands and agrees that any Medically Necessary health and behavioral health services contained in an IFSP must be provided to the Member in the amount, duration, scope, and setting established in the IFSP.

2.4 **Liability.** Provider understand and agrees that: (i) in the event Health Plan becomes insolvent or ceases operations, Provider sole recourse against Health Plan will be through the Health Plan's bankruptcy, conservatorship, or receivership estate; (ii) Members may not be held liable for Health Plan's debts in the event of Health Plan insolvency; and (iii) Texas Health and Human Services Commission ("HHSC") does not assume liability for the actions of, or judgments rendered against, Health Plan, its employees, agents, or subcontractors. Further, there is no right of subrogation, contribution, or indemnification against HHSC for any duty owed to Provider by the Health Plan or any judgment rendered against the Health Plan. HHSC's liability to Provider, if any, will be governed by the Texas Tort Claims Act, as amended or modified (Tex. Civ. Pract. & Rem. Code 101.001 et seq.).

2.5 **Marketing.** Provider agrees to comply with state and federal laws, rules, and regulations governing marketing. In addition, Provider agrees to comply with HHSC's marketing policies and procedures, as set forth in HHSC's Uniform Managed Care Manual ("UMCM"). Provider is prohibited from engaging in direct marketing to Members that is designed to increase enrollment in a particular health plan. The prohibition should not constrain Providers from engaging in permissible marketing activities consistent with broad outreach objectives and application assistance.

2.6 **Medicaid Provider Agreement.** Acute care providers serving Medicaid Members must enter into and maintain a Medicaid provider agreement with HHSC or its agent to participate in the Medicaid program and must have a Texas Provider Identification Number ("TPIN"). All Providers, both CHIP and Medicaid, must have a National Provider Identifier ("NPI") in accordance with the timelines established in 45 CFR Part 162, Subpart D.

2.7 **Member Communications.** Health Plan is prohibited from imposing restrictions upon Provider's free communication with a Member about the Member's medical conditions, treatment options, Health Plan referral policies, and other Health Plan policies, including financial incentives or arrangements and all managed care plans with whom Provider contracts.

2.8 **Member Protections.** Provider must inform Health Plan of any reports of abuse, neglect, or exploitation made regarding a Member. This includes Provider self-reports and reports made by others that the Provider becomes aware of**.**

2.9 **Primary Care Providers.** The following provisions apply to providers credentialed by Health Plan, or Health Plan's designee, as Primary Care Providers ("PCP").

a. PCP shall have screening and evaluation procedures for detection and treatment of, or referral for, any known or suspected behavioral health problems and disorders.

b. PCP shall be accessible to Members twenty-four (24) hours per day, seven (7) days per week.

c. PCP shall provide preventive care: (i) to children under age twenty-one (21) in accordance with American Academy of Pediatrics recommendations for Members and CHIP perinatal newborns, and the THSteps periodicity schedule published in the THSteps Manual for Medicaid Members; and (ii) to adults in accordance with the U.S. Preventative Task Force requirements.

d. PCP shall assess the medical needs and behavioral health needs of Members for referral to specialty care providers and provide referrals as needed.

e. PCP must coordinate Members' care with specialty care providers after referral.

f. PCP will serve as a medical home for Members.

2.10 **Tuberculosis.** Provider shall coordinate with the local tuberculosis ("TB") control program to ensure that all Members with confirmed or suspected TB have a contact investigation and receive Directly Observed Therapy. Provider shall report to the Texas Department of State Health Services ("DSHS") or the local TB control program any Member who is non-compliant, drug resistant, or who is or may be posing a public health threat.

2.11 **Women, Infants and Children.** Provider shall coordinate with the Women, Infants, and Children ("WIC") Special Supplemental Nutrition Program to provide medical information necessary for WIC eligibility determinations, such as height, weight, hematocrit, or hemoglobin.

2.12 **Standard of Care.** While performing the services described in this Agreement, Provider agrees to: (i) comply with applicable state laws, rules, and regulations, and HHSC's requests regarding personal and professional conduct generally applicable to the service locations; and (ii) otherwise conduct his or herself in a businesslike and professional manner.

2.13 **Confidentiality.** Provider shall treat all information that is obtained through the performance of the services included in this Agreement as confidential information to the extent that confidential treatment is provided under state and federal laws, rules, and regulations. This includes, but is not limited to, information relating to applicants or recipients of HHSC Programs. Provider shall not use information obtained through the performance of this Agreement in any manner except as is necessary for the proper discharge of obligations and securing of rights under this Agreement. Provider shall protect the confidentiality of Member Protected Health Information ("PHI"), including patient records. Provider must comply with all applicable federal and state laws, including the Health Insurance Portability and Accountability Act ("HIPAA") Privacy and Security Rule governing the use and disclosure of protected health information.

2.14 **Access to Records.**

a. Provider agrees to provide at no cost to HHSC: (i) all information required under Health Plan's contract with HHSC, including but not limited to, the reporting requirements and other information related to the Provider's performance of its obligations under the contract; and (ii) any information in its possession sufficient to permit HHSC to comply with the federal Balanced Budget Act of 1997 or other federal or state laws, rules, and regulations. All information must be provided in accordance with the timelines, definitions, formats, and instructions specified by HHSC.

b. Upon receipt of a record review request from the HHSC Office of Inspector General ("OIG") or another state or federal agency authorized to conduct compliance, regulatory, or program integrity functions, Provider must provide, at no cost to the requesting agency, the records requested within three (3) business days of the request. If the OIG or another state or federal agency representative reasonably believes that the requested records are about to be altered or destroyed or that the request may be completed at the time of the request or in less than twenty-four (24) hours, the provider must provide the records requested at the time of the request or in less than twenty-four (24) hours. The request for record review includes, but is not limited to: (i) clinical medical or dental Member records; (ii) other records pertaining to the Member; (iii) any other records of services provided to Medicaid or other health and human services program recipients and payments made for those services; (iv) documents related to diagnosis, treatment, service, lab results, charting; billing records, invoices, documentation of delivery items, equipment, or supplies; (v) radiographs and study models related to orthodontia services; (vi) business and accounting records with backup support documentation; (vii) statistical documentation; (viii) computer records and data; and/or (xi) contracts with providers and subcontractors. Failure to produce the records or make the records available for the purpose of reviewing, examining, and securing custody of the records may result in OIG imposing sanctions against the provider as described in 1 Tex. Admin. Code, Chapter 371, Subchapter G.

2.15 **Audit or Investigation.**

a. Provider agrees to provide, at no cost to the following entities and their designees, prompt, reasonable, and adequate access to the Agreement and any records, books, documents, and papers that are related to the Agreement and/or Provider's performance of its responsibilities under this Agreement: (i) the United States Department of Health and Human Services; (ii) the Comptroller General of the United States; (iii) Health Plan

program personnel from HHS; (iv) the Office of Inspector General; (v) the Medicaid Fraud Control Unit of the Texas Attorney General's Office; (vi) any independent verification and validation contractor, audit firm, or quality assurance contractor acting on behalf of HHSC; (vii) the Office of the State Auditor of Texas; (viii) state or federal law enforcement agencies; (ix) special or general investigating committee of the Texas Legislature; and (x) any other state or federal entity identified by HHSC or any other entity engaged by HHSC.

b. Provider shall provide access wherever it maintains such records, books, documents, and papers. Provider shall provide such access in reasonable comfort and provide any furnishings, equipment, and other conveniences deemed reasonably necessary to fulfill the purposes described herein. Requests for access may be for, but are not limited to, the following purposes: (i) examination; (ii) audit; (iii) investigation; (iv) contract administration; (v) the making of copies, excerpts, or transcripts; or (vi) any other purpose HHSC deems necessary for contract enforcement or to perform its regulatory functions.

c. Provider understands and agrees that the acceptance of funds under this Agreement acts as acceptance of the authority of the State Auditor's Office ("SAO"), or any successor agency, to conduct an investigation in connection with those funds. Provider further agrees to cooperate fully with the SAO or its successor in the conduct of the audit or investigation, including providing all records requested at no cost.

2.16 **Complaints and Appeals.** Provider understands and agrees that HHSC reserves the right and retains the authority to make reasonable inquiry and to conduct investigations into Provider and Member complaints.

2.17 **Member Billing**.

a. Provider is prohibited from billing or collecting any amount from a Medicaid Member for health care services or dental services provided pursuant to this Agreement. Federal and state laws provide severe penalties for any provider who attempts to bill or collect any payment from a Medicaid recipient for a Covered Service.

b. Health Plan shall initiate and maintain any action necessary to stop a Provider or employee, agent, assign, trustee, or successor-in-interest from maintaining an action against HHSC, an HHS Agency, or any Member to collect payment from HHSC, an HHS Agency, or any Member, excluding payment for non-covered services. This provision does not restrict a CHIP provider from collecting allowable copayment and deductible amounts from CHIP Members. Additionally, this provision does not restrict a CHIP dental provider from collecting payment for services that exceed a CHIP Member's benefit cap.

2.18 **Costs of Non-Covered Services**. Providers shall inform Members of the costs for non-Covered Services prior to rendering such services and shall obtain a signed private pay form from such a Member.

2.19 **HHSC Liability**. Provider understands and agrees that HHSC is not liable or responsible for payment for Covered Services rendered pursuant to this Agreement.

2.20 **Third Party Recovery**. Provider shall not interfere with or place any liens upon the State's right or Health Plan's right, acting as the State's agent, to recovery from third party resources.

2.21 **Clean Claims Payment.** Health Plan shall adjudicate (finalize as paid or denied adjudicated) Clean Claims for: (i) Covered Service within thirty (30) days from the date the Claim is received by Health Plan; or (ii) pharmacy Covered Services, no later than eighteen (18) days from receipt if the Claim submitted electronically, or twenty-one (21) days of receipt if the Claim is submitted non-electronically. Health Plan shall pay Provider interest at a rate of eighteen (18) percent interest, per annum, on all Clean Claims that are not adjudicated within thirty (30) days. However, duplicate Claims filed prior to the expiration of thirty-one (31) days are not subject to any interest payment if not processed within thirty (30) days.

2.22 **Claims Processing.**

a. Health Plan shall compensate Provider pursuant to the terms of this Agreement. Provider may access the State of Texas Medicaid Fee-For-Service Program fee schedule at: www.Molinahealthcare.com.

b. Providers may:

i. Contact Molina Healthcare of Texas' Provider Services Department at 1-866-449-6849.

ii. Non-electronic claims should be mailed to:

Molina Healthcare of Texas, Inc.

P.O. Box: 22719

Long Beach, CA 90801

iii. Electronic claims can be sent to Health Plan via: www.Molinahealthcare.com

c. Health Plan shall notify Provider in writing of any changes in the claims processing or adjudication entity at least ninety (90) days prior to the effective date of change.

d. Provider must comply with the requirements of Texas Government Code 531.024161, regarding the submission of claims involving supervised providers.

e. Program violations arising out of performance of this Agreement are subject to administrative enforcement by the OIG as specified in 1 Tex. Admin. Code, Chapter 371, Subchapter G.

2.23 **Appeals of Claims Payment Decisions.** The timeframes for appeals of claims payment decisions shall be as follows: (i) In the event that Health Plan denies a Provider claim, Provider must submit a request for review of the denied claim within one hundred twenty (120) days of the initial denial; (ii) in the event that Provider believes Health Plan incorrectly paid a Provider claim, Provider must submit a request for correction or adjustment within one hundred twenty (120) days of the date of the remittance advice; and (iii) Health Plan will use its best efforts to resolve all disputed claims within thirty (30) days of receipt. The format for appeals of claims payment decisions shall be as follows: (i) the request must specify why the Provider believes Health Plan owes the payment; (ii) in the case of coordination of benefits, the request must include the name and mailing address of any entity that has disclaimed responsibility for payment; (iii) the request must be addressed to the attention of Health Plan's Provider Services Department; (iv) the request must clearly indicate "Denied Claims Review Request" or "Adjustment Request;" and (v) the request must include all pertinent information, including, but not limited to, claim number, Member identifier, denial letter, supporting medical records, and any new information pertinent to the request.

2.24 **Compliance with Applicable Law**.

a. Provider understands and agrees that it is subject to all state and federal laws, rules, regulations, waivers, policies and guidelines, and court-ordered consent decrees, settlement agreements, or other court orders that apply to this Agreement, the UMCC, Health Plan's health benefits programs, and all persons or entities receiving state and federal funds. Provider understands and agrees that any violation by Provider of a state or federal law relating to the delivery of services pursuant to this Agreement, or any violation Health Plan's contract with HHSC could result in liability for money damages, and/or civil or criminal penalties and sanctions under state and/or federal law.

b. In addition, Provider understands and agrees that the following laws, rules, and regulations, and all amendments or modifications thereto, apply to this Agreement:

i. Environmental Protection Laws: Pro-Children Act of 1994 (20 USC 6081 et seq.) regarding the provision of a smoke-free workplace and promoting the non-use of all tobacco products; National Environmental Policy Act of 1969 (42 USC 4321 et seq.) and Executive Order 11514 ("Protection and Enhancement of Environmental Quality") relating to the institution of environmental quality control measures; Clean Air Act and Water Pollution Control Act regulations (Executive Order 11738, "Providing for Administration of the Clean Air Act and Federal Water Pollution Control Act with Respect to Federal Contracts, Grants, and Loans"); State Clean Air Implementation Plan (42 USC 740 et seq.) regarding conformity of federal actions to State Implementation Plans under Sec.176(c) of the Clean Air Act; and Safe Drinking Water Act of 1974 (21 USC 349; 42 USC 300f to 300j-9) relating to the protection of underground sources of drinking water;

ii. State and Federal Anti-Discrimination Laws: Title VI of the Civil Rights Act of 1964 (42 USC 2000d et seq.) and as applicable 45 CFR Part 80 or 7 CFR Part 15; Section 504 of the Rehabilitation Act of 1973 (29 USC 794); Americans with Disabilities Act of 1990 (42 USC 12101 et seq.); Age Discrimination Act of 1975 (42 USC 6101-6107); Title IX of the Education Amendments of 1972 (20 USC 1681-1688); Food Stamp Act of 1977 (7 USC 200 et seq.); Executive Order 13279, and its implementing regulations at 45 CFR Part 87 or 7 CFR Part 16 and Title 40: and the HHS agency's administrative rules, as set forth in the Texas Administrative Code, to the extent applicable to this Agreement;

iii. The Immigration and Nationality Act (8 USC 1101 et seq.) and all subsequent immigration laws and amendments;

iv. The Health Insurance Portability and Accountability Act of 1996 (Public Law 104-191); and

v. The Health Information Technology for Economic and Clinical Health Act at 42 USC 17931 et. seq.

2.25 **Fraud and Abuse**.

a. Provider understands and agrees to the following: (i) the OIG and/or the Texas Medicaid Fraud Control Unit shall be allowed to conduct private interviews of Provider and its employees, agents, contractors, and patients; (ii) requests for information from such entities shall be complied with, in the form and language requested; (iii) Provider and its employees, agents, and contractors shall cooperate fully with such entities in making themselves available in person for interviews, consultation, grand jury proceedings, pre-trial conference, hearings, trials and in any other process, including investigations; and (iv) compliance with these requirements will be at the Provider's own expense.

b. Provider further understands and agrees to the following: (i) Provider is subject to all state and federal laws and regulations relating to fraud, abuse, or waste in health care or dental care and the Medicaid and/or CHIP Programs, as applicable; (ii) Provider shall cooperate and assist HHSC and any state or federal agency that is charged with the duty of identifying, investigating, sanctioning, or prosecuting suspected fraud, abuse, or waste; (iii) Provider shall provide originals and/or copies of any and all information as requested by HHSC or the state or federal agency, allow access to premises, and provide records to the OIG, HHSC, CMS, the U.S. Department of Health and Human Services, Federal Bureau of Investigation, Texas Department of Insurance, the Texas Attorney General's Medicaid Fraud Control Unit or other unit of state or federal government, upon request, and free-of-charge; (iv) if Provider places required records in another legal entity's records, such as a hospital, Provider is responsible for obtaining a copy of these records for use by the above-named entities or their representatives; and (v) Provider shall report any suspected fraud or abuse including any suspected fraud and abuse committed by the Health Plan or a Member to the OIG.

c. If the Provider receives annual Medicaid payments of at least five (5) million (cumulative, from all sources), Provider must:

i. Establish written policies for all employees, managers, officers, contractors, subcontractors, and agents of the Provider. The policies must provide detailed information about the False Claims Act, administrative remedies for false claims and statements, any state laws about civil or criminal penalties for false claims, and whistleblower protections under such laws, as described in Section 1902(a)(68)(A) of the Social Security Act.

ii. Include as part of such written policies, detailed provisions regarding the Provider's policies and procedures for detecting and preventing fraud, waste, and abuse.

iii. Include in any employee handbook a specific discussion of the laws described in Section 1902(a)(68)(A) of the Social Security Act, the rights of employees to be protected as whistleblowers, and the Provider's policies and procedures for detecting and preventing fraud, waste, and abuse.

2.26 **Gifts and Gratuities.** Provider shall not offer or give anything of value to an officer or employee of HHSC or the State of Texas in violation of state law. A "thing of value" means any item of tangible or intangible property that has a monetary value of more than fifty dollars ($50.00) and includes, but is not limited to, cash, food, lodging, entertainment and charitable contributions. The term does not include contributions to public office holders or candidates for public office that are paid and reported in accordance with state and/or federal law. Health Plan may terminate this Agreement at any time for violation of this provision.

2.27 **Termination**. Health Plan shall provide a written explanation of the reasons for Provider's termination at least ninety (90) days before the effective date of the proposed termination. Health Plan may immediately terminate a Provider in cases involving: (i) imminent harm to patient health; (ii) an action by a state medical or dental board, another medical or dental licensing board, or another licensing board or government agency that effectively impairs the Provider's ability to practice medicine, dentistry, or another profession; or (iii) fraud or malfeasance. Not later than thirty (30) days following receipt of the termination notice, Provider may request a review of Health Plan's proposed termination by an advisory review panel. A provider whose participation is being terminated is entitled to an expedited review by Health Plan upon request. Within sixty (60) days following receipt of Provider's request and before the termination effective date, the advisory review panel will make its formal recommendation. Health Plan will communicate the advisory review panel decision to Provider and, upon Provider's request, Health Plan will

provide a copy of the recommendation. The advisory review panel decision is not binding upon Health Plan.

2.28 **Complaint Process.**

a. **Complaints.**

i. Provider shall submit any dispute, other than any dispute relating to payment or non-payment of a claim, to Health Plan in writing within sixty (60) days of when the issue arises.

ii. Provider shall submit such disputes to the attention of Health Plan's Provider Services Department.

b. **Health Plan Response.**

i. Health Plan shall use best efforts to acknowledge by phone, e-mail, or other writing, receipt of a dispute, other than any dispute relating to payment or non-payment of a claim, within five (5) business days.

ii. Health Plan shall investigate and resolve disputes within thirty (30) days of Health Plan's receipt of Provider's written correspondence.

iii. Health Plan's decision regarding disputes shall be communicated within thirty (30) days of Health Plan's receipt of Provider's written correspondence requesting review. If additional time is required, Health Plan shall communicate this information to Provider within thirty (30) days.

2.29 **Administrative Requirements.** Providers must inform both Health Plan and HHSC's administrative services contractor of any changes to Provider's address, telephone number, and group affiliation.

2.30 **Product Orders.** If Provider offers delivery services for covered products, such as durable medical equipment ("DME"), limited home health supplies ("LHHS"), or outpatient drugs or biological products, Provider must reduce, cancel, or stop delivery if Member or the Member's authorized representative submits an oral or written request. Provider must maintain records documenting the request.

2.31 **Insurance.** Provider shall maintain, during the term of this Agreement, Professional Liability Insurance of one hundred thousand dollars ($100,000.00) per occurrence and three hundred thousand dollars ($300,000.00) in the aggregate, or the limits required by the hospital at which Provider has admitting privileges.

2.32 **Quality Improvement Program.** Provider shall participate in Health Plan's Quality Improvement Program and activities, including peer review and audits of care rendered by Provider.

2.33 **Service Coordination.** In addition to the requirements stated herein, the following provisions are specific to and apply to, as applicable, STAR MCO, STAR+PLUS MCO, STAR Health MCO, and STAR Kids Members.

a. Home and Community Support Services Agency ("HCSSA") providers, adult day care providers, and residential care facility providers must notify Health Plan if a Member experiences any of the following: (i) a significant change in the Member's physical or mental condition or environment; (ii) hospitalization; (iii) an emergency room visit; or (iv) two or more missed appointments.

b. Providers using the Electronic Visit Verification system must maintain compliance with HHSC minimum standards detailed in UMCM, Chapter 8.7, Section IX.

2.34 **Waiting Times**. Providers must provide services within the timeframes that are a noted within Health Plan's Provider Manual.

2.35 **STAR and STAR+PLUS.** In addition to the requirements stated herein, the following provisions are specific to and apply to , as applicable, STAR MCO, STAR+PLUS MCO, STAR Health MCO, and STAR Kids Members.

a. **Family Planning.**

i. If a Member requests contraceptive services or family planning services, Provider must also provide the Member counseling and education about family planning and available family planning services.

ii. Provider shall not require parental consent for Members who are minors to receive family planning services.

iii. Provider shall comply with state and federal laws and regulations governing Member confidentiality (including minors) when providing information on family planning services to Members.

b. **THSteps.** Provider shall send all THSteps newborn screens to DSHS, formerly the Texas Department of Health, Bureau of Laboratories or a DSHS-certified laboratory. Provider shall include detailed identifying information for all screened newborn Members and each Member's mother to allow HHSC to link the screens performed at the hospital with screens performed at the two-week follow-up.

c. **Mental Health.** Providers must comply with 25 Tex. Admin. Code, Part 1, Chapter 415, Subchapter F, "Interventions in Mental Health Services," when providing Mental Health Rehabilitative Services and Mental Health Targeted Case Management.

d. **Advance Directives.** Provider shall comply with the requirements of state and federal laws, rules, and regulations relating to advance directives, including but not limited to, the Patient Self-Determination Act (Section 4751 of the Omnibus Reconciliation Act of 1990), as amended.

e. **Lead Screening**. In accordance with Texas Health & Safety Code Chapter 88 and related rules at 25 Tex. Admin. Code Chapter 37, Subchapter Q, Providers must: (i) report all blood lead results to the Childhood Lead Poisoning Program (if not performed at the DSHS state laboratory); and (ii) follow-up on suspected or confirmed cases of childhood lead exposure with the Childhood Lead Poisoning Prevention Program, and follow the Centers for Disease Control and Prevention guidelines for testing children for lead and follow-up actions for children with elevated lead levels located at www.dshs.state.tx.us/lead/pdf_files/pb_109_physician_reference.pdf.

2.36 **Pharmacy**

a. Health Plan will not impose restrictions on Medicaid/CHIP pharmacy providers' enrollment in Medicaid/CHIP as a condition to enroll in other lines of business.

b. Health Plan will not implement significant, non-negotiated, across-the-board provider reimbursement rate reductions unless prior approval has been obtained by HHSC.

c. Health Plan must ensure reasonable pharmacy provider reimbursement rates include a dispensing fee, administration fees (when applicable), and ingredient costs.

d. Health Plan must follow the requirements in applicable contracts regarding reimbursement for pharmacy providers.

e. Health Plan must ensure that they and their Subcontractors do not prohibit pharmacy providers from disclosing any information regarding the pharmacy provider agreement to HHSC.

f. Health Plan must ensure that pharmacy provider processes and procedures must be provided in a separate Texas Medicaid section specific to Medicaid and CHIP only.

g. This Agreement will not permit, nor will it be construed to permit: :

i. Pharmacy provider rate reductions without HHSC notification of approval as required under HHSC UMCM Section 8.1.4.8;

ii. Reconciliation methodologies that include Medicaid or CHIP claims';

iii. Mechanisms that facilitate "spread pricing," including pharmacy provider reimbursement clawbacks or discounts; or

iv. Pharmacy Benefit Manager ("PBM") restrictions that are greater than those required by HHSC for Medicaid/CHIP participation.

h. Unless directed by HHSC, Health Plan and its PBM are prohibited from implementing an aggregate reconciliation process after the point-of-sale transaction such that the final cost of drugs for payors is changed or the price paid to pharmacy providers is changed. Such prohibition includes aggregate reconciliation processes for additional fees, contracted effective rate agreements, payment reductions, and the recoupments of funds based on financial performance measures. This prohibitive language does not apply to audit-related claim reviews, approved Alternative Payment Modes, or Fraud, Waste, and Abuse investigations.

i. Health Plan must provide a Network pharmacy the sources used to determine the MAC pricing at contract execution, renewal, and upon request. Health Plan may not use as a pricing source provider performance

standards, provider network performance standards, or effective rate agreements.

j. Please consult the Texas Medicaid Provider Procedures Manual, Durable Medical Equipment ("DME") and Comprehensive Care Program ("CCP") sections, and Molina Texas Medicaid Provider Manual Pharmacy Chapter for information regarding the scope of coverage of DME and other products commonly found in a pharmacy. For qualified children, this includes Medically Necessary over-the-counter drugs, diapers, disposable/expendable medical supplies, and some nutritional products. It also includes Medically Necessary nebulizers, ostomy supplies or bed pans, and other supplies and equipment for all qualified Members. Molina Healthcare of Texas encourages your pharmacy's participation in providing these items to Medicaid clients.

2.37 **CHIP.** In addition to the requirements stated herein, the following provisions are specific to and apply to CHIP Members.

a. Provider is responsible for collecting at the time of service any applicable CHIP copayments or deductibles in accordance with CHIP cost-sharing limitations.

b. Providers shall not charge: (i) cost-sharing or deductibles to CHIP Members of Native American Tribes or Alaskan Natives; (ii) copayments or deductibles to a CHIP Member with an ID card that indicates the Member has met his or her cost-sharing obligation for the balance of their term of coverage; (iii) copayments for well-child or well-baby visits or immunizations (CHIP MCO and CHIP RSA); or (iv) copayments for routine preventive and diagnostic dental services (CHIP Dental).

c. Copayments are the only amounts that Network Providers may collect from CHIP Members, except for costs associated with unauthorized nonemergency services provided to a Member by out-of-network providers for non-covered services.

ATTACHMENT G

Molina Marketplace

Laws and Government Program Requirements

This attachment sets forth applicable Laws and Government Program Requirements or other provisions necessary to reflect compliance for the Molina Marketplace Product. This attachment will be automatically modified to conform to subsequent changes to Laws or Government Program Requirements. All provisions of the Agreement not specifically modified by this attachment remain unchanged and will control. In the event of a conflict between this attachment and any other provision in the Agreement, the provisions in this attachment will control for the Molina Marketplace Product. Capitalized terms used in this attachment will have the same meaning ascribed to them in the Agreement unless otherwise set forth in this attachment. Any purported modification or any provision in this attachment that is inconsistent with a Law or Government Program Requirement will not be effective and will be interpreted in a manner that is consistent with the applicable Law or Government Program Requirement. This attachment only applies to the Molina Marketplace Product.

1.1 **Definitions**. The following definitions apply only in this attachment:

a. **Emergency Care** means health care services provided in a hospital emergency facility, freestanding emergency medical care facility, or comparable emergency facility to evaluate and stabilize medical conditions of a recent onset and severity, including severe pain, that would lead a prudent layperson possessing an average knowledge of medicine and health to believe that the individual's condition, sickness, or injury is of such a nature that failure to get immediate medical care could: (i) place the individual's health in serious jeopardy; (ii) result in serious impairment to bodily functions; (iii) result in serious dysfunction of a bodily organ or part; (iv) result in serious disfigurement; or (v) for a pregnant woman, result in serious jeopardy to the health of the fetus.

b. **Delegated Entity** means any party that enters into an agreement with a qualified health plan ("QHP") issuer to provide administrative services or health care services to qualified individuals and their dependents. Consistent with this definition, Provider is a Delegated Entity.

c. **Downstream Entity** means any party that enters into an agreement with a Delegated Entity or with another downstream entity for purposes of providing administrative or health care services related to the agreement between the Delegated Entity and the QHP issuer. The term is intended to reach the entity that directly provides administrative services or health care services to qualified individuals and their dependents. Consistent with this definition, Health Plan is a QHP issuer.

1.2 **Duplicate Claim Submission**. A Provider may not submit a duplicate claim for payment before the forty-sixth (46th) day after the original claim was submitted.

1.3 **Determination of Claim and Penalties for Late Payment of Claims**. Health Plan shall make determinations of claims and follow the penalties associated for late payment of Clean Claims pursuant to Texas Insurance Code, Chapter 843, and/or federal law, as applicable.

1.4 **Coordination of Benefits**. Provider and Health Plan shall follow the requirements related to coordination of benefits pursuant to Texas Insurance Code, Chapter 843, and/or federal law, as applicable.

1.5 **Member Hold Harmless**. Provider hereby agrees that in no event, including, but not limited to non-payment by the Health Plan, Health Plan insolvency, or breach of this agreement, will Provider bill, charge, collect a deposit from, seek compensation, remuneration, or reimbursement from, or have any recourse against subscriber, enrollee, or persons other than Health Plan acting on their behalf for services provided pursuant to this agreement. This provision will not prohibit collection of supplemental charges or copayments made in accordance with the terms of the Agreement between Health Plan and Member. Provider further agrees that:

a. this provision will survive the termination of this agreement regardless of the cause giving rise to termination and will be construed to be for the benefit of the Health Plan Member; and

b. this provision supersedes any oral or written contrary agreement now existing or hereafter entered into between Provider and Member, or persons acting on their behalf. Any modification, addition, or deletion to the provisions of this clause will be effective on a date no earlier than fifteen (15) days after the commissioner has received written notice of such proposed changes.

1.6 **Deductibles and Copayments**. Provider may bill a Member for any co-payment, deductible, or co-insurance obligation applicable to Member's Health Plan product. Provider may not waive a deductible or copayment by the acceptance of an assignment.

1.7 **Health Plan Accountability.** Notwithstanding any relationship Health Plan may have with Provider, as Delegated Entity, and any Downstream Entity, Health Plan maintains responsibility for its compliance, as well as the compliance of the Provider and any Downstream Entity, with all applicable standards enumerated at 45 CFR 156.340(a). (45 CFR 156.340(a)).

1.8 **Delegated Entity and Downstream Entity Compliance.** If any of Health Plan's issuer activities and obligations, in accordance with 45 CFR 156.340(a), are delegated to Provider, then Provider, as Delegated Entity, agrees to the following. Provider further agrees that it will require the same of any Downstream Entities. (45 CFR 156.340(b)).

a. **Standards for Downstream and Delegated Entities.** The Agreement, including, when applicable, any delegated services attachment/addendum, specifies the delegated activities and reporting responsibilities. (45 CFR 156.340(b)(1)).

b. **Revocation of Delegated Activities.** In the event the United States Department of Health and Human Services ("HHS") or Health Plan determines, in its sole discretion, that Provider or any Downstream Entity have not performed the delegated activities and reporting obligations satisfactorily, consistent with applicable standards enumerated at 45 CFR 156.340(a), then the delegated activities and reporting obligations shall be revoked. The foregoing does not preclude the employment of other remedies in lieu of revocation of the delegated activities or reporting responsibilities if deemed appropriate by HHS or Health Plan, as applicable. (45 CFR 156.340(b)(2)).

c. **Compliance with Laws.** Provider will perform such activities and obligations in compliance with all applicable laws and regulations relating to the standards specified in 45 CFR 156.340(a). (45 CFR 156.340(b)(3)).

d. **Right to Audit.** Provider and any Downstream Entity shall permit access to the relevant Health Insurance Marketplace authority, the Secretary of HHS, and the Office of the Inspector General, or their designees, to evaluate through audit, inspection, or other means, Provider's or Downstream Entity's books, contracts, computers, or other electronic systems, including medical records and documentation, relating to Health Plan's obligations in accordance with the standards enumerated at 45 CFR 156.340(a), as applicable, until ten (10) years from the final date of the Agreement period. (45 CFR 156.340(b)(4)-(5))

1.9 **Privacy and Security of Personally Identifiable Information.** Provider must adhere to privacy and security standards and obligations to which Health Plan has agreed to in its contract or agreement with the Health Insurance Marketplace authority, as applicable. (45 CFR 155.260(b)(2)(v)

1.10 **Consolidated Appropriations Act of 2021.** For the Marketplace Product, the Consolidated Appropriations Act of 2021, Section 201, prohibits Health Plan from entering into a contract with Provider, network or association of providers, third-party administrator, or other service provider offering access to a network of providers that would directly or indirectly restrict Health Plan from: (i) providing provider-specific cost or quality of care information or data to referring providers, plan sponsors, participants, beneficiaries, or enrollees, or individuals eligible to become participants, beneficiaries, or enrollees of the plan or coverage; (ii) electronically accessing de-identified claims and encounter data for each participant, beneficiary, or enrollee; or (iii) sharing such information, consistent with applicable privacy Laws. Notwithstanding anything to the contrary in this Agreement, Provider agrees Health Plan is in compliance with this provision with respect to this Agreement and nothing in this Agreement will prohibit Health Plan from complying with this provision.

The Remainder of this Attachment is Intentionally Left Blank

ATTACHMENT H

Identification Sheet

When Provider includes multiple entities that may bill Health Plan with different Tax Identification Numbers ("TIN"), Provider must supply each Legal Name and TIN. Each Legal Name and TIN must exactly match the corresponding tax form (i.e., W-9) that Provider supplies to Health Plan.

Legal Name – Matching the applicable tax form (i.e., W-9, Line 1)
Tax ID Number – As listed on corresponding tax form
NPI – That corresponds to the Tax ID Number
IRS 1099 Address – If different than Mailing Address

Legal Name – Matching the applicable tax form (i.e., W-9, Line 1)
Tax ID Number – As listed on corresponding tax form
NPI – That corresponds to the Tax ID Number
IRS 1099 Address – If different than Mailing Address

Legal Name – Matching the applicable tax form (i.e., W-9, Line 1)
Tax ID Number – As listed on corresponding tax form
NPI – That corresponds to the Tax ID Number
IRS 1099 Address – If different than Mailing Address

Legal Name – Matching the applicable tax form (i.e., W-9, Line 1)
Tax ID Number – As listed on corresponding tax form
NPI – That corresponds to the Tax ID Number
IRS 1099 Address – If different than Mailing Address

Use of continuation pages is acceptable to collect additional information.

TARRANT COUNTY
COMMISSIONERS COURT COMMUNICATION

Court Date: December 9, 2025	**Court Order #:**	**Page:** 1 of 88
Department: Public Health	**Prepared By:** Gary Collins, Contracts Specialist	**Approved By:** Amanda Campbell

SUBJECT:

Consideration of a Participating Provider Agreement with Superior HealthPlan, Inc., and its Affiliates, for Reimbursement of Eligible Clinical Health Care Services Provided by Tarrant County Public Health

*****CONSENT AGENDA *****

COMMISSIONERS COURT ACTION REQUESTED

It is requested that the Commissioners' Court consider a Participating Provider Agreement with Superior Health Plan, Inc. (PCHP), including its Affiliates, to allow Tarrant County Public Health (TCPH) to enroll as a provider, accept the Superior Health Plan and receive reimbursement for eligible clinical health care services provided to clients.

BACKGROUND

TCPH provides clinical health care services to the residents of Tarrant County through various clinics and programs. To better serve patients and enhance billing options, TCPH continues to pursue enrollment and participation with both commercial and state health plans.

The proposed Participating Provider Agreement will authorize TCPH to bill and receive reimbursement for clinical services provided to individuals insured by Superior Health Plan, Inc., and its Affiliates. This expands the insurance plans accepted by TCPH and supports continued access to care for clients.

The initial term of the agreement will begin January 1, 2026, for a period of one (1) year, and will automatically renew for successive one (1)-year terms unless either party provides at least ninety (90) days' written notice of intent not to renew. All other terms and conditions not amended will remain in full force and effect.

The Criminal District Attorney's Office has reviewed and approved this agreement as to form.

FISCAL IMPACT

All associated reimbursements will be deposited in the T0400-2026 Public Health / 5100011000 Public Health / 428054 Health Private Ins.

PASSED AND APPROVED on December 9, 2025.

COUNTY OF TARRANT
STATE OF TEXAS

By: Separate Electronic Signature Page
Tim O'Hare
County Judge

APPROVED AS TO FORM:

_____
District Attorney's Office*

*By law, the District Attorney's Office may only approve contracts for its clients. We reviewed this document as to form from our client's legal perspective. Other parties may not rely on this approval. Instead, those parties should seek contract review from independent counsel.

Attachments

Contract_Superior Participating Provider Agreement.pdf
Superior_DA-JUDGE-EXECUTED DATE CONTRACT APPROVAL FORM-FINAL.pdf

PARTICIPATING PROVIDER AGREEMENT

This Participating Provider Agreement (together with all Attachments and amendments, this "***Agreement***") is made and entered by and between County of Tarrant dba Tarrant County Public Health ("***Provider***") and Superior HealthPlan, Inc. ("***Health Plan***" or "***MCO***") (each a "***Party***" and collectively the "***Parties***"). This Agreement is effective as of the date designated by Health Plan on the signature page of this Agreement ("***Effective Date***").

WHEREAS, Provider desires to provide certain health care services to individuals in products offered by or available from or through a Company or Payor (as hereafter defined), and Provider desires to participate in such products as a Participating Provider (as defined herein), all as hereinafter set forth.

WHEREAS, Health Plan desires for Provider to provide such health care services to individuals in such products, and Health Plan desires to have Provider participate in certain of such products as a Participating Provider, all as hereinafter set forth.

NOW, THEREFORE, in consideration of the recitals and mutual promises herein stated, the Parties hereby agree to the provisions set forth below.

ARTICLE I - DEFINITIONS

When appearing with initial capital letters in this Agreement (including an Attachment(s)), the following quoted and underlined terms (and the plural thereof, when appropriate) have the meanings set forth below.

1.1. "Affiliate" means a person or entity directly or indirectly controlling, controlled by, or under common control with Health Plan. For purposes of this Agreement, "Affiliate" includes, but is not limited to, WellCare of Texas, Inc., WellCare Health Plans, Inc., WellCare National Health Insurance Company, SelectCare Health Plans, Inc. and SelectCare of Texas, Inc.

1.2. "Attachment" means any document, including an addendum, schedule or exhibit, attached to this Agreement as of the Effective Date or that becomes attached pursuant to Section 2.2 or Section 8.7, all of which are incorporated herein by reference and may be amended from time to time as provided in this Agreement.

1.3. "Clean Claim" has, as to each particular Product, the meaning set forth in the applicable Product Attachment or, if no such definition exists, the Provider Manual.

1.4. "Company" means (collectively or individually, as appropriate in the context) Health Plan and/or one or more of its Affiliates, except those specifically excluded by Health Plan.

1.5. "Compensation Schedule" means at any given time the then effective schedule(s) of maximum rates applicable to a particular Product under which Provider and Contracted Providers will be compensated for the provision of Covered Services to Covered Persons. Such Compensation Schedule(s) will be set forth or described in one or more Attachments to this Agreement, and may be included within a Product Attachment.

1.6. "Contracted Provider" means a physician, hospital, health care professional or any other provider of items or services that is employed by or has a contractual relationship with Provider and that provides Covered Services. The term "Contracted Provider" includes Provider for those Covered Services provided by Provider.

1.7. "Coverage Agreement" means any agreement, program or certificate entered into, issued or agreed to by Company or Payor, under which Company or Payor furnishes administrative services or other services in support of a health care program for an individual or group of individuals, and which may include access to one or more of Company's provider networks or vendor arrangements, except those excluded by Health Plan.

1.8. "Covered Person" means any individual entitled to receive Covered Services pursuant to the terms of a Coverage Agreement.

1.9. "Covered Services" means those services and items for which benefits are available and payable under the applicable Coverage Agreement and which are determined, if applicable, to be Medically Necessary under the applicable Coverage Agreement.

1.10. "Managed Care Organization" or "MCO" will have the same meaning as Health Plan.

1.11. "Negative Balance" means an account balance in which Provider or Contracted Provider debits exceed credits as a result of Health Plan or Payor overpayments or payments made in error.

1.12. "Medically Necessary" or "Medical Necessity" shall have the meaning defined in the applicable Coverage Agreement or applicable Regulatory Requirements.

1.13. "Participating Provider" means, with respect to a particular Product, any physician, hospital, ancillary, or other health care provider that has contracted, directly or indirectly, with Health Plan to provide Covered Services to Covered Persons, that has been approved for participation by Company, and that is designated by Company as a "participating provider" in such Product.

1.14. "Payor" means the entity (including Company where applicable) that bears direct financial responsibility for paying from its own funds, without reimbursement from another entity, the cost of Covered Services rendered to Covered Persons under a Coverage Agreement and, if such entity is not Company, such entity contracts, directly or indirectly, with Company for the provision of certain administrative or other services with respect to such Coverage Agreement.

1.15. "Payor Contract" means the contract with a Payor, pursuant to which Company furnishes administrative services or other services in support of the Coverage Agreements entered into, issued or agreed to by a Payor, which services may include access to one or more of Company's provider networks or vendor arrangements, except those excluded by Health Plan. The term "Payor Contract" includes Company's or other Payor's contract with a governmental authority (also referred to herein as a "Governmental Contract") under which Company or Payor arranges for the provision of Covered Services to Covered Persons.

1.16. "Product" means any program or health benefit arrangement designated as a "product" by Health Plan (e.g., Health Plan Product, Medicaid Product, PPO Product, Payor-specific Product, etc.) that is now or hereafter offered by or available from or through Company (and includes the Coverage Agreements that access, or are issued or entered into in connection with such product, except those excluded by Health Plan).

1.17. "Product Attachment" means an Attachment setting forth requirements, terms and conditions specific or applicable to one or more Products, including certain provisions that must be included in a provider agreement under the Regulatory Requirements, which may be alternatives to, or in addition to, the requirements, terms and conditions set forth in this Agreement or the Provider Manual.

1.18. "Provider Manual" means the provider manual and any billing manuals, adopted by Company or Payor which include, without limitation, requirements relating to utilization management, quality management, grievances and appeals, and Product-specific, Payor-specific and State-specific requirements, as may be amended from time to time by Company or Payor.

1.19. "Regulatory Requirements" means all applicable federal and state statutes, regulations, regulatory guidance, judicial or administrative rulings, requirements of Governmental Contracts and standards and requirements of any accrediting or certifying organization, including, but not limited to, the requirements set forth in a Product Attachment.

1.20. "State" is defined as the state identified in the applicable Attachment.

ARTICLE II - PRODUCTS AND SERVICES

2.1. Contracted Providers. Provider shall, and shall cause each Contracted Provider to, comply with and abide by the agreements, representations, warranties, acknowledgements, certifications, terms and conditions of this Agreement (including the provisions of Schedule A and Schedule A-1 to this Agreement) that are applicable to Provider, a Contracted Provider, or their services, and any other Attachments), and the Provider Manual, and fulfill all of the duties, responsibilities and obligations imposed on Provider and Contracted Providers under this Agreement (including each Attachment), and the Provider Manual.

2.2. Participation in Products. Subject to the other provisions of this Agreement, each Contracted Provider may be identified as a Participating Provider in each Product identified in a Product Attachment designated on Schedule B of this Agreement or added to this Agreement in accordance with Section 2.2 hereof.

2.2.1. Provider shall, at all times during the term of this Agreement, require each of its Contracted Providers to, subject to Company's approval, participate as Participating Providers in each Product identified in a Product Attachment that is designated on Schedule B to this Agreement or added to this Agreement in accordance with Section 2.2 hereof.

2.2.2. A Contracted Provider may only identify itself as a Participating Provider for those Products in which the Contracted Provider actually participates as provided in this Agreement. Provider acknowledges that Company or Payor may have, develop or contract to develop various Products or provider networks that have a variety of provider panels, program components and other requirements. No Company or Payor warrants or guarantees that any Contracted Provider: (i) will participate in all or a minimum number of provider panels, (ii) will be utilized by a minimum number of Covered Persons, or (iii) will indefinitely remain a Participating Provider or member of the provider panel for a particular network or Product.

2.2.3. Provider shall provide Health Plan with the information listed on Schedule C entitled "Information for Contracted Providers" for itself and the Contracted Providers as of the Effective Date. Provider shall provide Health Plan, from time to time or on a periodic basis as requested by Health Plan, with a complete and accurate list of Information for Contracted Providers and such other information as mutually agreed upon by the Parties, and shall provide Health Plan with a list of modifications to such list at least 30 days prior to the effective date of such changes, when possible. Provider shall provide such lists in a manner and format mutually acceptable to the Parties.

2.2.4. Provider may add new providers to this Agreement as Contracted Providers. In such case, Provider shall provide written notice to Health Plan of the prospective addition(s), and shall use best efforts to provide such notice at least 60 days in advance of such addition. Provider shall maintain written agreements with each of its Contracted Providers (other than Provider) that require the Contracted Providers to comply with the terms and conditions of this Agreement and that address and comply with the Regulatory Requirements.

2.2.5. If Company desires to add one or more Contracted Providers to an additional Product, Company or Payor, as applicable, will provide advance written notice (electronic or paper) thereof to Provider, along with the applicable Product Attachment and the new Compensation Schedule, if any. The applicable Contracted Providers will not be designated as Participating Providers in such additional Product if Provider opts out of such additional Product by giving Company or Payor, as applicable, written notice of its decision to opt-out within 30 days of Company's or Payor's, as applicable, giving of written notice. If Provider timely provides such opt-out notice, the applicable Contracted Providers will not be considered Participating Providers in such Product. If Provider does not timely provide such opt-out notice, then each applicable Contracted Provider shall be a Participating Provider in such additional Product on the terms and conditions set forth in this Agreement and the applicable Product Attachment.

2.3. Covered Services. Each Contracted Provider shall provide Covered Services described or referenced in the applicable Product Attachment(s) to Covered Persons in those Products in which the Contracted Provider is a Participating Provider, in accordance with this Agreement. Each Contracted Provider shall provide Covered Services to Covered Persons with the same degree of care and skill as customarily provided to patients who are not Covered Persons, within the scope of the Contracted Provider's license and in accordance with generally accepted standards of the Contracted Provider's practice and business and in accordance with the provisions of this Agreement, the Provider Manual, and Regulatory Requirements.

2.4. Provider Manual; Policies and Procedures. Provider and Contracted Providers shall at all times cooperate and comply with the requirements, policies, programs and procedures ("Policies") of Company and Payor, which may be described in the Provider Manual and include, but are not limited to, the following: credentialing criteria and requirements; notification requirements; medical management programs; claims and billing, quality assessment and improvement, utilization review and management, disease management, case management, on-site reviews, referral and prior authorization, and grievance and appeal procedures; coordination of benefits and third party liability policies; carve-out and third party vendor programs; and data reporting requirements. The failure to comply with such Policies could result in a denial or reduction of payment to the Provider or Contracted Provider or a denial or reduction of the Covered Person's benefits. Such Policies do not in any way affect or remove the obligation of Contracted Providers to render care. Health Plan shall make the Provider Manual available to Provider and Contracted Providers via one or more designated websites or alternative means. Upon Provider's reasonable request, Health Plan shall provide Provider with a copy of the Provider Manual. In the event of a material change to the Provider Manual, Health Plan will use reasonable efforts to notify Provider in advance of such change. Such notice may be given by Health Plan through a periodic provider newsletter, an update to the on-line Provider Manual, or any other written method (electronic or paper).

2.5. Credentialing Criteria. Provider and each Contracted Provider shall complete Company's and/or Payor's credentialing and/or recredentialing process as required by Company's and/or Payor's credentialing Policies, and shall at all times during the term of this Agreement meet all of Company's and/or Payor's credentialing criteria. Provider and each Contracted Provider represents, warrants and agrees: (a) that it is currently, and for the duration of this Agreement shall remain: (i) in compliance with all applicable Regulatory Requirements, including licensing laws; (ii) if applicable, accredited by The Joint Commission or the American Osteopathic Association; and (iii) a Medicare participating provider under the federal Medicare program and a Medicaid participating provider under applicable federal and State laws; and (b) that all Contracted Providers and all employees and contractors thereof will perform their duties in accordance with all Regulatory Requirements, as well as applicable national, State and local standards of professional ethics and practice, and (c) Provider or Contracted Provider does not have a Negative Balance account with MCO or Payor under a previous contractual agreement, nor does Provider or Contracted Provider have a Negative Balance with MCO or Payor under this Agreement that is outstanding greater than 180 days. No Contracted Provider shall provide Covered Services to Covered Persons or identify itself as a Participating Provider unless and until the Contracted Provider has been notified, in writing, by Company that such Contracted Provider has successfully completed Company's credentialing process.

2.6. Eligibility Determinations. Provider or Contracted Provider shall timely verify whether an individual seeking Covered Services is a Covered Person. Company or Payor, as applicable, will make available to Provider and Contracted Providers a method, whereby Provider and Contracted Providers can obtain, in a timely manner, general information about eligibility and coverage. Company or Payor, as applicable, does not guarantee that persons identified as Covered Persons are eligible for benefits or that all services or supplies are Covered Services. If Company, Payor or its delegate determines that an individual was not a Covered Person at the time services were rendered, such services shall not be eligible for payment under this Agreement. In addition, Company will use reasonable efforts to include or contractually require Payors to clearly display Company's name, logo or mailing address (or other identifier(s) designated from time to time by Company) on each membership card.

2.7. Referral and Preauthorization Procedures. Provider and Contracted Providers shall comply with referral and preauthorization procedures adopted by Company and or Payor, as applicable, prior to referring a Covered Person to any individual, institutional or ancillary health care provider. Unless otherwise expressly

authorized in writing by Company or Payor, Provider and Contracted Providers shall refer Covered Persons only to Participating Providers to provide the Covered Service for which the Covered Person is referred. Except as required by applicable law, failure of Provider and Contracted Providers to follow such procedures may result in denial of payment for unauthorized treatment.

2.8. Treatment Decisions. No Company or Payor is liable for, nor will it exercise control over, the manner or method by which a Contracted Provider provides items or services under this Agreement. Provider and Contracted Providers understand that determinations of Company or Payor that certain items or services are not Covered Services or have not been provided or billed in accordance with the requirements of this Agreement or the Provider Manual are administrative decisions only. Such decisions do not absolve the Contracted Provider of its responsibility to exercise independent judgment in treatment decisions relating to Covered Persons. Nothing in this Agreement (i) is intended to interfere with Contracted Provider's relationship with Covered Persons, or (ii) prohibits or restricts a Contracted Provider from disclosing to any Covered Person any information that the Contracted Provider deems appropriate regarding health care quality, medical treatment decisions or alternatives.

2.9. Carve-Out Vendors. Provider acknowledges that Company may, during the term of this Agreement, carve-out certain Covered Services from its general provider contracts, including this Agreement, for one or more Products as Company deems necessary or appropriate. Provider and Contracted Providers shall cooperate with and, when medically appropriate, utilize all third party vendors designated by Company for those Covered Services identified by Company from time to time for a particular Product.

2.10. Disparagement Prohibition. Provider, each Contracted Provider and the officers of Company shall not disparage the other during the term of this Agreement or in connection with any expiration, termination or non-renewal of this Agreement. Neither Provider nor Contracted Provider shall interfere with Company's direct or indirect contractual relationships including, but not limited to, those with Covered Persons or other Participating Providers. Nothing in this Agreement should be construed as limiting the ability of either Health Plan, Company, Provider or a Contracted Provider to inform Covered Persons that this Agreement has been terminated or otherwise expired or, with respect to Provider, to promote Provider to the general public or to post information regarding other health plans consistent with Provider's usual procedures, provided that no such promotion or advertisement is specifically directed at one or more Covered Persons. In addition, nothing in this provision should be construed as limiting Company's ability to use and disclose information and data obtained from or about Provider or Contracted Provider, including this Agreement, to the extent determined reasonably necessary or appropriate by Company in connection with its efforts to comply with Regulatory Requirements and to communicate with regulatory authorities.

2.11. Nondiscrimination. Provider and each Contracted Provider will provide Covered Services to Covered Persons without discrimination on account of race, sex, sexual orientation, age, color, religion, national origin, place of residence, health status, type of Payor, source of payment (e.g., Medicaid generally or a State-specific health care program), physical or mental disability or veteran status, and will ensure that its facilities are accessible as required by Title III of the Americans With Disabilities Act of 1991. Provider and Contracted Providers recognize that, as a governmental contractor, Company or Payor may be subject to various federal laws, executive orders and regulations regarding equal opportunity and affirmative action, which also may be applicable to subcontractors, and Provider and each Contracted Provider agree to comply with such requirements as described in any applicable Attachment.

2.12. Notice of Certain Events. Provider shall give written notice to Health Plan of: (i) any event of which notice must be given to a licensing or accreditation agency or board; (ii) any change in the status of Provider's or a Contracted Provider's license; (iii) termination, suspension, exclusion or voluntary withdrawal of Provider or a Contracted Provider from any state or federal health care program, including but not limited to Medicaid; or (iv) any settlements or judgments in connection with a lawsuit or claim filed or asserted against Provider or a Contracted Provider alleging professional malpractice involving a Covered Person. In any instance described in subsection (i)-(iii) above, Provider must notify Health Plan or Payor in writing within 10 days, and in any instance described in subsection (iv) above, Provider must notify Health Plan or Payor in writing within 30 days, from the date it first obtains knowledge of the pending of the same.

2.13. Use of Name. Provider and each Contracted Provider hereby authorizes each Company or Payor to use their respective names, telephone numbers, addresses, specialties, certifications, hospital affiliations (if any), and other descriptive characteristics of their facilities, practices and services for the purpose of identifying the Contracted Providers as "Participating Providers" in the applicable Products. Provider and Contracted Providers may only use the name of the applicable Company or Payor for purposes of identifying the Products in which they participate, and may not use the registered trademark or service mark of Company or Payor without prior written consent.

2.14. Compliance with Regulatory Requirements. Provider, each Contracted Provider and Company agree to carry out their respective obligations under this Agreement and the Provider Manual in accordance with all applicable Regulatory Requirements, including, but not limited to, the requirements of the Health Insurance Portability and Accountability Act, as amended, and any regulations promulgated thereunder. If, due to Provider's or Contracted Provider's noncompliance with applicable Regulatory Requirements or this Agreement, sanctions or penalties are imposed on Company, Company may, in its sole discretion, offset such amounts against any amounts due Provider or Contracted Providers from any Company or require Provider or the Contracted Provider to reimburse Company for such amounts.

2.15. Program Integrity Required Disclosures. Provider agrees to furnish to Health Plan complete and accurate information necessary to permit Company to comply with the collection of disclosures requirements specified in 42 C.F.R. Part 455 Subpart B or any other applicable State or federal requirements, within such time period as is necessary to permit Company to comply with such requirements. Such requirements include but are not limited to: (i) 42 C.F.R. §455.105, relating to (a) the ownership of any subcontractor with whom Provider has had business transactions totaling more than $25,000 during the 12-month period ending on the date of the request and (b) any significant business transaction between Provider and any wholly owned supplier or subcontractor during the 5 year period ending on the date of the request; (ii) 42 C.F.R. §455.104, relating to individuals or entities with an ownership or controlling interest in Provider; and (iii) 42 C.F.R. §455.106, relating to individuals with an ownership or controlling interest in Provider, or who are managing employees of Provider, who have been convicted of a crime.

ARTICLE III - CLAIMS SUBMISSION, PROCESSING, AND COMPENSATION

3.1. Claims or Encounter Data Submission. As provided in the Provider Manual and/or Policies, Contracted Providers shall submit to Payor or its delegate claims for payment for Covered Services rendered to Covered Persons. Contracted Provider shall submit encounter data to Payor or its delegate in a timely fashion, which must contain statistical and descriptive medical and patient data and identifying information, if and as required in the Provider Manual. Payor or its delegate reserves the right to deny payment to the Contracted Provider if the Contracted Provider fails to submit claims for payment or encounter data in accordance with the Provider Manual and/or Policies.

3.2. Compensation. The compensation for Covered Services provided to a Covered Person ("Compensation Amount") will be the appropriate amount under the applicable Compensation Schedule in effect on the date of service for the Product in which the Covered Person participates. Subject to the terms of this Agreement and the Provider Manual, Provider and Contracted Providers shall accept the Compensation Amount as payment in full for the provision of Covered Services. Subject to the terms of this Agreement, Payor shall pay or arrange for payment of each Clean Claim received from a Contracted Provider for Covered Services provided to a Covered Person in accordance with the applicable Compensation Amount less any applicable copayments, cost-sharing or other amounts that are the Covered Person's financial responsibility under the applicable Coverage Agreement.

3.3. Financial Incentives. The Parties acknowledge and agree that nothing in this Agreement shall be construed to create any financial incentive for Provider or a Contracted Provider to withhold Covered Services.

3.4. Hold Harmless. Provider and each Contracted Provider agree that in no event, including but not limited to non-payment by a Payor, a Payor's insolvency, or breach of this Agreement, shall Provider or a Contracted Provider bill, charge, collect a deposit from, seek compensation, remuneration or reimbursement from, or have any recourse against a Covered Person or person acting on the Covered Person's behalf, other than Payor, for Covered

Services provided under this Agreement. This provision shall not prohibit collection of any applicable copayments, cost-sharing or other amounts that are the Covered Person's financial responsibility under the applicable Coverage Agreement. This provision survives termination or expiration of this Agreement for any reason, will be construed for the benefit of Covered Persons, and supersedes any oral or written agreement entered into between Provider or a Contracted Provider and a Covered Person.

3.5. Recovery Rights. Payor or its delegate shall have the right to immediately offset or recoup any and all amounts owed by Provider or a Contracted Provider to Payor or Company against amounts owed by the Payor or Company to the Provider or Contracted Provider. Provider and Contracted Providers agree that all recoupment and any offset rights under this Agreement will constitute rights of recoupment authorized under State or federal law and that such rights will not be subject to any requirement of prior or other approval from any court or other government authority that may now have or hereafter have jurisdiction over Provider or a Contracted Provider.

ARTICLE IV - RECORDS AND INSPECTIONS

4.1. Records. Each Contracted Provider shall maintain medical, financial and administrative records related to items or services provided to Covered Persons, including but not limited to a complete and accurate permanent medical record for each such Covered Person, in such form and detail as are required by applicable Regulatory Requirements and consistent with generally accepted medical standards.

4.2. Access. Provider and each Contracted Provider shall provide access to their respective books and records to each of the following, including any delegate or duly authorized agent thereof, subject to applicable Regulatory Requirements: (i) Company and Payor, during regular business hours and upon prior notice; (ii) appropriate State and federal authorities, to the extent such access is necessary to comply with Regulatory Requirements; and (iii) accreditation organizations. Provider and each Contracted Provider shall provide copies of such records at no expense to any of the foregoing that may make such request. Each Contracted Provider also shall obtain any authorization or consent that may be required from a Covered Person in order to release medical records and information to Company or Payor or any of their delegates. Provider and each Contracted Provider shall cooperate in and allow on-site inspections of its, his or her facilities and records by any Company, Payor, their delegates, any authorized government officials, and accreditation organizations. Provider and each Contracted Provider shall compile information necessary for the expeditious completion of such on-site inspection in a timely manner.

4.3. Record Transfer. Subject to applicable Regulatory Requirements, each Contracted Provider shall cooperate in the timely transfer of Covered Persons' medical records to any other health care provider, at no charge and when required.

ARTICLE V - INSURANCE AND INDEMNIFICATION

5.1. Insurance. During the term of this Agreement and for any applicable continuation period as set forth in Section 7.3 of this Agreement, Provider and/or each Contracted Provider shall maintain policies of general and professional liability insurance and other insurance necessary to insure Provider and each Contracted Provider, respectively; their respective employees; and any other person providing services hereunder on behalf of Provider or such Contracted Provider, as applicable, against any claim(s) of personal injuries or death alleged to have been caused or caused by their performance under this Agreement. Such insurance shall include, but not be limited to, any "tail" or prior acts coverage necessary to avoid any gap in coverage. Insurance shall be through a licensed carrier acceptable to Health Plan, and in a minimum amount of $1,000,000 per occurrence, and $3,000,000 in the aggregate (for Hospital Providers) or in a minimum amount of $100,000 per occurrence and $300,000 in the aggregate (for all other Providers), unless a lesser amount is accepted by Health Plan or where State law mandates otherwise. Provider and/or each Contracted Provider will provide Health Plan with at least 15 days prior written notice of cancellation, non-renewal, lapse, or adverse material modification of such coverage. Upon Health Plan's request, Provider and each Contracted Provider will furnish Health Plan with evidence of such insurance.

5.2. Indemnification by Provider and Contracted Provider. To the extent permitted by federal law and the constitution of the state of Texas, Provider and each Contracted Provider shall indemnify and hold harmless (and at Health Plan's request defend) Company and Payor and all of their respective officers, directors, agents and employees from and against any and all third party claims for any loss, damages, liability, costs, or expenses (including reasonable attorney's fees) judgments or obligations arising from or relating to any negligence, wrongful act or omission, or breach of this Agreement by Provider, a Contracted Provider, or any of their respective officers, directors, agents or employees.

5.3. Indemnification by Health Plan. Health Plan agrees to indemnify and hold harmless (and at Provider's request defend) Provider, Contracted Providers, and their officers, directors, agents and employees from and against any and all third party claims for any loss, damages, liability, costs, or expenses (including reasonable attorney's fees), judgments, or obligations arising from or relating to any negligence, wrongful act or omission or breach of this Agreement by Company or its directors, officers, agents or employees.

ARTICLE VI - DISPUTE RESOLUTION

6.1. Informal Dispute Resolution. Any dispute between Provider and/or a Contracted Provider, as applicable (the "Provider Party"), and Health Plan and/or Company, as applicable (including any Company acting as Payor) (the "Administrator Party"), with respect to or involving the performance under, termination of, or interpretation of this Agreement, or any other claim or cause of action hereunder, whether sounding in tort, contract or under statute (a "Dispute") shall first be addressed by exhausting the applicable procedures in the Provider Manual pertaining to claims payment, credentialing, utilization management, or other programs. If, at the conclusion of these applicable procedures, the matter is not resolved to satisfaction of the Provider Party and the Administrator Party, or if there are no applicable procedures in the Provider Manual, then the Provider Party and the Administrator Party shall engage in a period of good faith negotiations between their designated representatives who have authority to settle the Dispute, which negotiations may be initiated by either the Provider Party or the Administrator Party upon written request to the other, provided such request takes place within one year of the date on which the requesting party first had, or reasonably should have had, knowledge of the event(s) giving rise to the Dispute. If the matter has not been resolved within 60 days of such request, either the Provider Party or the Administrator Party may, as its sole and exclusive forum for the litigation of the Dispute or any part thereof, initiate arbitration pursuant to Section 6.2 below by providing written notice to the other party

6.2. Arbitration. If either the Provider Party or the Administrator Party wishes to pursue the Dispute as provided in Section 6.1, such party shall submit it to binding arbitration conducted in accordance with the Commercial Arbitration Rules of the American Arbitration Association ("AAA"). In no event may any arbitration be initiated more than 1 year following, as applicable, the end of the 60 day negotiation period set forth in Section 6.1, or the date of notice of termination. Arbitration proceedings shall be conducted by an arbitrator chosen from the National Healthcare Panel at a mutually agreed upon location within the State. The arbitrator shall not award any punitive or exemplary damages of any kind, shall not vary or ignore the provisions of this Agreement, and shall be bound by controlling law. Any arbitration in which the total amount in controversy is less than $100,000 shall be conducted in a single hearing day. The Parties and the Contracted Providers, on behalf of themselves and those that they may now or hereafter represent, agree to and do hereby waive any right to pursue, on a class basis, any Dispute. Each of the Provider Party and the Administrator Party shall bear its own costs and attorneys' fees related to the arbitration except that the AAA's Administrative Fees, all Arbitrator Compensation and travel and other expenses, and all costs of any proof produced at the direct request of the arbitrator shall be borne equally by the applicable parties, and the arbitrator shall not have the authority to order otherwise. The existence of a Dispute or arbitration proceeding shall not in and of itself constitute cause for termination of this Agreement. Except as hereafter provided, during an arbitration proceeding, each of the Provider Party and the Administrator Party shall continue to perform its obligations under this Agreement pending the decision of the arbitrator. Nothing herein shall bar either the Provider Party or the Administrator Party from seeking emergency injunctive relief to preclude any actual or perceived breach of this Agreement, although such party shall be obligated to file and pursue arbitration at the earliest reasonable opportunity. Judgment on the award rendered may be entered in any court having jurisdiction thereof. Because of the confidential nature of this Agreement, the Provider and Administrator Parties further agree that in any action to compel arbitration

or enforce any arbitration award, no party may file any part of this Agreement (including Attachments) in the court record, except this Section 6.2. Nothing contained in this Article VI shall limit a Party's right to terminate this Agreement with or without cause in accordance with Section 7.2.

ARTICLE VII - TERM AND TERMINATION

7.1. Term. This Agreement is effective as of the Health Plan Effective Date, and will remain in effect for an initial term ("Initial Term") of 1 year(s), after which it will automatically renew for successive terms of 1 year each (each a "Renewal Term"), unless this Agreement is sooner terminated as provided in this Agreement or either Party gives the other Party written notice of non-renewal of this Agreement not less than 90 days prior to the end of the then-current term. In addition, either Party may elect to not renew a Contracted Provider's participation as a Participating Provider in a particular Product for the next Renewal Term, by giving the other Party written notice of such non-renewal not less than 90 days prior to the, as applicable, last day of the Initial Term or applicable Renewal Term; in such event, Provider shall immediately notify the affected Contracted Provider of such non-renewal. Termination of any Contracted Provider's participation in a particular Product will not have the effect of terminating either this Agreement or the Contracted Provider's participation in any other Product in which the Contracted Provider participates under this Agreement.

7.2. Termination. This Agreement, or the participation of Provider or a Contracted Provider as a Participating Provider in one or more Products, may be terminated or suspended as set forth below.

7.2.1. Upon Notice. This Agreement may be terminated by either Party giving the other Party at least 90 days prior written notice of such termination. The participation of any Contracted Provider as a Participating Provider in a Product may be terminated by either Party giving the other Party at least 90 days prior written notice of such termination; in such event, Provider shall immediately notify the affected Contracted Provider of such termination.

7.2.2. With Cause. This Agreement, or the participation of any Contracted Provider as a Participating Provider in one or more Products under this Agreement, may be terminated by either Party giving at least 90 days prior written notice of termination to the other Party if such other Party (or the applicable Contracted Provider) is in breach of any material term or condition of this Agreement and such other Party (or the Contracted Provider) fails to cure the breach within the 60 day period immediately following the giving of written notice of such breach. Any notice given pursuant to this Section 7.2.2 must describe the specific breach. In the case of a termination of a Contracted Provider, Provider shall immediately notify the affected Contracted Provider of such termination.

7.2.3. Suspension of Participation. Unless expressly prohibited by applicable Regulatory Requirements, Health Plan has the right to immediately suspend or terminate the participation of a Contracted Provider in any or all Products by giving written notice thereof to Provider when Health Plan determines that (i) based upon available information, the continued participation of the Contracted Provider appears to constitute an immediate threat or risk to the health, safety or welfare of Covered Persons, or (ii) the Contracted Provider's fraud, malfeasance or non-compliance with Regulatory Requirements is reasonably suspected or (iii) Provider or Contracted Provider have a Negative Balance with MCO or Payor under this Agreement greater than $1,000 that has been outstanding greater than 180 days. Provider shall immediately notify the affected Contracted Provider of such suspension. During such suspension, the Contracted Provider shall, as directed by Health Plan, discontinue the provision of all or a particular Covered Service to Covered Persons. During the term of any suspension, the Contracted Provider shall notify Covered Persons that his or her status as a Participating Provider has been suspended. Such suspension will continue until the Contracted Provider's participation is reinstated or terminated.

7.2.4. Insolvency. This Agreement may be terminated immediately by a Party giving written notice thereof to the other Party if the other Party is insolvent or has bankruptcy proceedings initiated against it.

7.2.5. Credentialing. The status of a Contracted Provider as a Participating Provider in one or more Products may be terminated immediately by Health Plan giving written notice thereof to Provider if the Contracted Provider fails to adhere to Health Plan's credentialing criteria, including, but not limited to, if the Contracted Provider

(i) loses, relinquishes, or has materially affected its license to provide Covered Services in the State, (ii) fails to comply with the insurance requirements set forth in this Agreement; or (iii) is convicted of a criminal offense related to involvement in any state or federal health care program or has been terminated, suspended, barred, voluntarily withdrawn as part of a settlement agreement, or otherwise excluded from any state or federal health care program. Provider shall immediately notify the affected Contracted Provider of such termination.

7.3. Effect of Termination. After the effective date of termination of this Agreement or a Contracted Provider's participation in a Product, this Agreement shall remain in effect for purposes of those obligations and rights arising prior to the effective date of termination. Upon such a termination, each affected Contracted Provider (including Provider, if applicable) shall (i) continue to provide Covered Services to Covered Persons in the applicable Product(s) during the longer of the 90 day period following the date of such termination or such other period as may be required under any Regulatory Requirements, and, if requested by Company, each affected Contracted Provider (including Provider, if applicable) shall continue to provide, as a Participating Provider, Covered Services to Covered Persons until such Covered Persons are assigned or transferred to another Participating Provider in the applicable Product(s), and (ii) continue to comply with and abide by all of the applicable terms and conditions of this Agreement, including, but not limited to, Section 3.4 (Hold Harmless) hereof, in connection with the provision of such Covered Services during such continuation period. During such continuation period, each affected Contracted Provider (including Provider, if applicable) will be compensated in accordance with this Agreement and shall accept such compensation as payment in full.

7.4. Survival of Obligations. All provisions hereof that by their nature are to be performed or complied with following the expiration or termination of this Agreement, including without limitation Sections 2.8, 2.10, 3.2, 3.4, 3.5, 4.2, 5.1, 5.2, 5.3, 6.2, 7.3, and 7.4 and Article VIII, survive the expiration or termination of this Agreement.

ARTICLE VIII - MISCELLANEOUS

8.1. Relationship of Parties. The relationship between or among Health Plan, Company, Provider, Payor and any Contracted Provider hereunder is that of independent contractors. None of the provisions of this Agreement will be construed as creating any agency, partnership, joint venture, employee-employer, or other relationship. References herein to the rights and obligations of any Company under this Agreement are references to the rights and obligations of each Company individually and not collectively. A Company is only responsible for performing its respective obligations hereunder with respect to a particular Product, Coverage Agreement, Payor Contract, Covered Service or Covered Person. A breach or default by an individual Company shall not constitute a breach or default by any other Company, including but not limited to Health Plan.

8.2. Conflicts Between Certain Documents. If there is any conflict between this Agreement and the Provider Manual, this Agreement will control. In the event of any conflict between this Agreement and any Product Attachment, the Product Attachment will control as to such Product.

8.3. Assignment. This Agreement is intended to secure the services of and be personal to Provider and may not be assigned, sublet, delegated, subcontracted or transferred by Provider without Health Plan's prior written consent. Health Plan shall have the right, exercisable in its sole discretion, to assign or transfer all or any portion of its rights or to delegate all or any portion of its interests under this Agreement or any Attachment to an Affiliate, successor of Health Plan, or purchaser of the assets or stock of Health Plan, or the line of business or business unit primarily responsible for carrying out Health Plan's obligations under this Agreement.

8.4. Headings. The headings of the sections of this Agreement are inserted merely for the purpose of convenience and do not limit, define, or extend the specific terms of the section so designated.

8.5. Governing Law. The interpretation of this Agreement and the rights and obligations of Health Plan, Company, Provider and any Contracted Providers hereunder will be governed by and construed in accordance with applicable federal and State laws.

8.6. Third Party Beneficiary. This Agreement is entered into by the Parties signing it for their benefit, as well as, in the case of Health Plan, the benefit of Company, and in the case of Provider, the benefit of each Contracted Provider. Except as specifically provided in Section 3.4 hereof, no Covered Person or third party, other than Company, will be considered a third party beneficiary of this Agreement.

8.7. Amendment. Except as otherwise provided in this Agreement, this Agreement may be amended only by written agreement of duly authorized representatives of the Parties.

8.7.1. Health Plan may amend this Agreement by giving Provider written notice of the amendment to the extent such amendment is deemed necessary or appropriate by Health Plan to comply with any Regulatory Requirements. Any such amendment will be deemed accepted by Provider upon the giving of such notice.

8.7.2. Health Plan may amend this Agreement by giving Provider written notice (electronic or paper) of the proposed amendment. Unless Provider notifies Health Plan in writing of its objection to such amendment during the 60 day period following the giving of such notice by Health Plan, Provider shall be deemed to have accepted the amendment. If Provider objects to any proposed amendment to either the base agreement or any Attachment, Health Plan may exclude one or more of the Contracted Providers from being Participating Providers in the applicable Product (or any component program of, or Coverage Agreement in connection with, such Product).

8.8. Entire Agreement. All prior or concurrent agreements, promises, negotiations or representations either oral or written, between Health Plan and Provider relating to a subject matter of this Agreement, which are not expressly set forth in this Agreement, are of no force or effect.

8.9. Severability. The invalidity or unenforceability of any terms or provisions hereof will in no way affect the validity or enforceability of any other terms or provisions.

8.10. Waiver. The waiver by either Party of the violation of any provision or obligation of this Agreement will not constitute the waiver of any subsequent violation of the same or other provision or obligation.

8.11. Notices. Except as otherwise provided in this Agreement, any notice required or permitted to be given hereunder is deemed to have been given when such written notice has been personally delivered or deposited in the United States mail, postage paid, or delivered in hard copy or electronically by a service that provides written receipt or acknowledgment of delivery, addressed as follows:

To Health Plan at:	To Provider at:
Attn: Network Development and Contracting	Attn: Tim O'Hare, County Judge
Superior HealthPlan, Inc.	County of Tarrant dba Tarrant County Public Health
7990 IH 10 West, Suite 300	100 E. Weatherford St.
San Antonio, TX 78230	Fort Worth, TX 76196
	countyjudgegrants@tarrantcountytx.gov cc: phcontracts@tarrantcountytx.gov

or to such other address as such Party may designate in writing. Notwithstanding the previous paragraph, Health Plan may provide notices by electronic mail, through its provider newsletter or on its provider website.

8.12. Force Majeure. Neither Party shall be liable or deemed to be in default for any delay or failure to perform any act under this Agreement resulting, directly or indirectly, from acts of God, civil or military authority, acts of public enemy, war, accidents, fires, explosions, earthquake, flood, strikes or other work stoppages by either Party's employees, or any other similar cause beyond the reasonable control of such Party.

8.13. Proprietary Information. Each Party is prohibited from, and shall prohibit its Affiliates and Contracted Providers from, disclosing to a third party the substance of this Agreement, or any information of a confidential nature acquired from the other Party (or Affiliate or Contracted Provider thereof) during the course of this Agreement, except to agents of such Party as necessary for such Party's performance under this Agreement, or as required by a Payor Contract or applicable Regulatory Requirements. Provider acknowledges and agrees that all information relating to Company's programs, policies, protocols and procedures is proprietary information and Provider shall not disclose such information to any person or entity without Health Plan's express written consent.

8.14. Authority. The individuals whose signatures are set forth below represent and warrant that they are duly empowered to execute this Agreement. Provider represents and warrants that it has all legal authority (e.g., as an agent or attorney-in-fact) to contract on behalf of and to bind all Contracted Providers to the terms of the Agreement with Health Plan. In the event Provider does not possess the right to legally bind Contracted Provider to this Agreement, Provider agrees to execute a statement to be signed by said Contracted Provider, in a form acceptable to Health Plan, attesting to the fact that said Contracted Provider has read this Agreement and agrees to be bound thereto. If Provider has written agreements with its Contracted Providers, Provider represents and agrees that (i) the terms of such agreements do not conflict with the terms of this Agreement, (ii) the terms of this Agreement shall apply in any situation where there is any inconsistency or conflict between the terms of this Agreement and the terms of any such agreement or with respect to any matter which is not addressed in any such agreement between Provider and the Contracted Provider, and (iii) that this provision shall supersede any similar provision in any agreement between Provider and Contracted Provider. Upon request from Health Plan or any governmental agency, Provider agrees to make available any document that demonstrates a Contracted Provider is legally bound to this Agreement. Provider and each Contracted Provider acknowledges that references herein to the rights and obligations of any "Company" or a "Payor" under this Agreement are references to the rights and obligations of each Company and each Payor individually and not of the Companies or Payors collectively. Notwithstanding anything herein to the contrary, all such rights and obligations are individual and specific to each such Company and each such Payor and the reference to Company or Payor herein in no way imposes any cross-guarantees or joint responsibility or liability by, between or among such individual Companies or Payors. A breach or default by an individual Company or Payor shall not constitute a breach or default by any other Company or Payor, including but not limited to Health Plan.

* * * * *

THIS AGREEMENT CONTAINS A BINDING ARBITRATION PROVISION THAT MAY BE ENFORCED BY THE PARTIES.

IN WITNESS WHEREOF, the Parties hereto have executed this Agreement, and Product Attachments as indicated below, and evidenced by a corresponding signature effective as of the date set forth on their respective signature lines.

HEALTH PLAN:	**PROVIDER:**
Superior HealthPlan, Inc.	County of Tarrant dba Tarrant County Public Health (Legibly Print Name of Provider)
Authorized Signature:	Authorized Signature:
Print Name: Emily Elizarde	Print Name: Tim O'Hare
Title: Vice President, Network Management & Operations	Title: County Judge
Signature Date:	Signature Date: 12/09/2025
ICM #: ICMProviderAgreement_344807	Tax Identification Number: 75-6001170
To be completed by Health Plan only: Effective Date:	National Provider Identifier: 1194783183 Medicare Number:

Pursuant to Texas Insurance Code § 1458.101(e), a provider network contract must include a separate signature for each "line of business" included in the agreement. Each "line of business" described in §1458.101 is referenced below to evidence the Parties' intent to include Provider's participation in the products described in this Agreement.

IN WITNESS WHEREOF, the Parties intend to:
Execute the **Medicaid and CHIP Product Attachment** and ***Medicaid fee schedule*** in all parts as it appears in this Agreement.

Provider Authorized Signature: Date:

Execute the **Medicaid and CHIP Product Attachment** and ***CHIP fee schedule*** in all parts as it appears in this Agreement.
Provider Authorized Signature: Date:

Execute the **Medicare Product Attachment** and ***Medicare HMO fee schedule*** in all parts as it appears in this Agreement.
Provider Authorized Signature: Date:

Execute the **Medicare Product Attachment** and ***Medicare PPO fee schedule*** in all parts as it appears in this Agreement.
Provider Authorized Signature: Date:

Execute the **Commercial-Exchange Product Attachment** and ***EPO fee schedule*** in all parts as it appears in this Agreement.
Provider Authorized Signature: Date:

Execute the **Commercial-Exchange Product Attachment** and ***HMO fee schedule*** in all parts as it appears in this Agreement.
Provider Authorized Signature: Date:

PARTICIPATING PROVIDER AGREEMENT

SCHEDULE A
CONTRACTED PROVIDER-SPECIFIC PROVISIONS

Provider and Contracted Providers shall comply with the applicable provisions of this Schedule A.

1. Hospitals. If Provider or a Contracted Provider is a hospital ("Hospital"), the following provisions apply.

1.1 24 Hour Coverage. Each Hospital shall be available to provide Covered Services to Covered Persons 24 hours per day, 7 days per week.

1.2 Emergency Care. Each Hospital shall provide Emergency Care (as hereafter defined) in accordance with Regulatory Requirements. The Contracted Provider shall notify Company's medical management department of any emergency room admissions by electronic file sent within 24 hours or by the next business day of such admission. "Emergency Care" (or derivative thereof) has, as to each particular Product, the meaning set forth in the applicable Coverage Agreement or Product Attachment. If there is no definition in such documents, "Emergency Care" means inpatient and/or outpatient Covered Services furnished by a qualified provider that are needed to evaluate or stabilize an Emergency Medical Condition. "Emergency Medical Condition" means a medical condition manifesting itself by acute symptoms of sufficient severity (including severe pain) that a prudent layperson, who possesses an average knowledge of health and medicine, could reasonably expect the absence of immediate medical attention to result in the following: (i) placing the health of the individual (or, with respect to a pregnant woman, the health of the woman or her unborn child) in serious jeopardy; (ii) serious impairment to bodily functions; or (iii) serious dysfunction of any bodily organ or part.

1.3 Staff Privileges. Each Hospital shall assist in granting staff privileges or other appropriate access to Company's Participating Providers who are qualified medical or osteopathic physicians, provided they meet the reasonable standards of practice and credentialing standards established by the Hospital's medical staff and bylaws, rules, and regulations.

1.4 Discharge Planning. Each Hospital agrees to cooperate with Company's system for the coordinated discharge planning of Covered Persons, including the planning of any necessary continuing care.

1.5 Credentialing Criteria. Each Hospital shall: (a) currently, and for the duration of this Agreement, remain accredited by the Joint Commission or American Osteopathic Association, as applicable; and (b) ensure that all employees of Hospital perform their duties in accordance with all applicable local, State and federal licensing requirements and standards of professional ethics and practice.

1.6 Cancellation of Product Orders. A Hospital that offers delivery services for Covered Services and products, such as durable medical equipment (DME), limited home health supplies (LHHS), or outpatient drugs or biological products must reduce, cancel, or stop delivery if the Covered Person or the Covered Person's authorized representative submits an oral or written request. The Hospital must maintain records documenting the request.

1.7 National Committee for Quality Assurance ("NCQA") Accreditation of Health Plans Standards. Each Hospital agrees to: (i) cooperate with Quality Management and Improvement ("QI") activities; (ii) maintain the confidentiality of a Covered Persons information and records pursuant to the Agreement; and (iii) allow the Company to use Hospital's performance data.

2. Practitioners. If Provider or Contracted Provider is a physician or other health care practitioner (including physician extenders) ("Practitioner"), the following provisions apply.

2.1. Contracted Professional Qualifications. At all times during the term of this Agreement, Practitioner shall, as applicable, maintain medical staff membership and admitting privileges with at least one hospital that is a Participating Provider ("Participating Hospital") with respect to each Product in which the Practitioner participates. Upon Company's request, Practitioner shall furnish evidence of the foregoing to Company. If Practitioner does not have such admitting privileges, Provider or the Practitioner shall provide Company with a written statement from another Participating Provider who has such admitting privileges, in good standing, certifying that such individual agrees to assume responsibility for providing inpatient Covered Services to Covered Persons who are patients of the applicable Practitioner.

2.2. Acceptance of New Patients. To the extent that Practitioner is accepting new patients, such Practitioner must also accept new patients who are Covered Persons with respect to the Products in which such Practitioner participates. Practitioner shall notify Company in writing 45 days prior to such Practitioner's decision to no longer accept Covered Persons with respect to a particular Product. In no event will an established patient of any Practitioner be considered a new patient.

2.3. Preferred Drug List/Drug Formulary. If applicable to the Covered Person's coverage, Practitioners shall use commercially reasonable efforts, when medically appropriate under the circumstances, to comply with formulary or preferred drug list when prescribing medications for Covered Persons.

2.4. Cancellation of Product Orders. A Provider and each Contracted Provider that offers delivery services for Covered Services and products, such as durable medical equipment (DME), limited home health supplies (LHHS), or outpatient drugs or biological products must reduce, cancel, or stop delivery if the Covered Person or the Covered Person's authorized representative submits an oral or written request. The Provider and Contracted Provider must maintain records documenting the request.

2.5. National Committee for Quality Assurance ("NCQA") Accreditation of Health Plans Standards. Each Practitioner agrees to: (i) cooperate with Quality Management and Improvement ("QI") activities; (ii) maintain the confidentiality of a Covered Persons information and records pursuant to the Agreement; and (iii) allow the Company to use Practitioner's performance data.

3. Ancillary Providers. If Provider or Contracted Provider is an ancillary provider (including but not limited to a home health agency, durable medical equipment provider, sleep center, pharmacy, ambulatory surgery center, nursing facility, laboratory or urgent care center) ("Ancillary Provider"), the following provisions apply.

3.1. Acceptance of New Patients. To the extent that Ancillary Provider is accepting new patients, such Ancillary Provider must also accept new patients who are Covered Persons with respect to the Products in which such Ancillary Provider participates. Ancillary Provider shall notify Company in writing 45 days prior to such Ancillary Provider's decision to no longer accept Covered Persons with respect to a particular Product. In no event will an established patient of any Ancillary Provider be considered a new patient.

3.2. Cancellation of Product Orders. A Provider and each Contracted Provider that offers delivery services for Covered Services and products, such as durable medical equipment (DME), limited home health supplies (LHHS), or outpatient drugs or biological products must reduce, cancel, or stop delivery if the Covered Person or the Covered Person's authorized representative submits an oral or written request. The Provider and Contracted Provider must maintain records documenting the request.

3.3. National Committee for Quality Assurance ("NCQA") Accreditation of Health Plans Standards. Each ancillary provider agrees to: (i) cooperate with Quality Management and Improvement ("QI") activities; (ii) maintain the confidentiality of a Covered Persons information and records pursuant to the Agreement; and (iii) allow the Company to use ancillary provider's performance data.

4. FQHC. If Provider or a Contracted Provider is a federally qualified health center ("FQHC"), the following provision applies.

4.1. FQHC Insurance. To the extent FQHC's employees are deemed to be federal employees qualified for protection under the Federal Tort Claims Act ("FTCA") and Health Plan has been provided with documentation of such status issued by the U.S. Department of Health and Human Services (such status to be referred to as "FTCA Coverage"), Section 5.1 of this Agreement will not apply to those Contracted Providers with FTCA Coverage. FQHC shall provide evidence of such FTCA Coverage to Health Plan at any time upon request. FQHC shall promptly notify Health Plan if, any time during the term of this Agreement, any Contracted Provider is no longer eligible for, or if FQHC becomes aware of any fact or circumstance that would jeopardize, FTCA Coverage. Section 5.1 of this Agreement will apply to a Contracted Provider immediately upon such Contracted Provider's loss of FTCA Coverage for any reason.

5. Facility Providers. If Provider or a Contracted Provider is a facility (including but not limited to Clinic, FQHC, LTAC, Nursing Home, Rehab, Rural Health Clinic, Skilled Nursing) ("Facility Provider") the following provision applies.

5.1. National Committee for Quality Assurance ("NCQA") Accreditation of Health Plans Standards. Each facility agrees to: (i) cooperate with Quality Management and Improvement ("QI") activities; (ii) maintain the confidentiality of a Covered Persons information and records pursuant to the Agreement; and (iii) allow the Company to use facility's performance data.

6. Long Term Services and Supports ("LTSS") and Home and Community-Based Services ("HCBS") Providers. If Provider or a Contracted Provider is a provider of LTSS and/or HCBS services, the following provisions apply.

6.1. Definition. LTSS generally includes assistance with daily self-care activities (e.g., walking, toileting, bathing, and dressing) and activities that support an independent lifestyle (e.g., food preparation, transportation, and managing medications). The broad category of LTSS also includes care and service coordination for people who live in their own home, a residential setting, a nursing facility, or other institutional setting. Home and community-based services ("HCBS") are a subset of LTSS that functions outside of institutional care to maximize independence in the community.

6.2. HCBS Waiver Authorization. Provider shall not provide HCBS Covered Services to Covered Person without the required HCBS waiver authorization.

6.3. Conditions for Reimbursement. No payment shall be made to the Provider unless the Provider has strictly conformed to the policies and procedures of the HCBS Waiver Program, including but not limited to not providing HCBS Covered Services without prior authorization of Health Plan. For the purposes of this Exhibit, "HCBS Waiver Program" shall mean any special Medicaid program operated under a waiver approved by the Centers for Medicare and Medicaid Services which allows the provision of a special package of approved services to Covered Person.

6.4. Acknowledgement. Health Plan acknowledges that Provider is a provider of LTSS and is not necessarily a provider of medical or health care services. Nothing in this Agreement is intended to require Provider to provide medical or health care services that Provider does not routinely provide, but would not prohibit providers from offering these services, as appropriate.

6.5. Notification Requirements. Provider or the applicable Contracted Provider shall provide the following notifications to Health Plan, via written notice or via telephone contact at a number to be provided by Health Plan, within the following time frames:

6.5.1. Provider or the applicable Contracted Provider shall notify Health Plan of a Covered Person's visit to urgent care or the emergency department of any hospital, or of a Covered Person's hospitalization, within 24 hours of becoming aware of such visit or hospitalization.

6.5.2. Provider or the applicable Contracted Provider shall notify Health Plan of any change to the designated/assigned services being provided under a Covered Person's plan of care and/or service plan, within 24 hours of becoming aware of such change.

6.5.3. Provider or the applicable Contracted Provider shall notify Health Plan if a Covered Person misses an appointment with Provider, within 24 hours of becoming aware of such missed appointment.

6.5.4. Provider or the applicable Contracted Provider shall notify Health Plan of any change in a Covered Person's medical or behavioral health condition, within 24 hours of becoming aware of such change. (Examples of changes in condition are set forth in the Provider Manual.)

6.5.5. Provider or the applicable Contracted Provider shall notify Health Plan of any safety issue identified by Provider or Contracted Provider or its agent or subcontractor, within 24 hours of the identification of such safety issue. (Examples of safety issues are set forth in the Provider Manual.)

6.5.6. Provider or the applicable Contracted Provider shall notify Health Plan of any change in Provider's or Contracted Provider's key personnel, within 24 hours of such change.

6.6. Minimum Data Set. If Contracted Provider is a nursing facility, Provider or such Contracted Provider shall submit to Health Plan or its designee the Minimum Data Set as defined by CMS and required under federal law and Health Plan policy as it relates to all Covered Persons who are residents in Contracted Provider's facility. Such submission shall be via electronic mail, facsimile transmission, or other manner and format reasonably requested by Health Plan.

6.7. Quality Improvement Plan. Each Contracted Provider shall participate in Health Plan's LTSS quality improvement plan. Each Contracted Provider shall permit Health Plan to access such Contracted Providers' assessment and quality data upon reasonable advance notice, which may be given by electronic mail.

6.8. Electronic Visit Verification. If Contracted Provider provides in-home services, Contracted Provider shall comply with 21st Century Cures Act and Health Plan's electronic visit verification system requirements where applicable and accessible.

6.9. Criminal Background Checks. Provider shall conduct a criminal background check on each Contracted Provider prior to the commencement of services under this Agreement and as requested by Health Plan thereafter. Provider shall provide the results of such background checks to Health Plan and member, if self-directed, upon request. Provider agrees to immediately notify Health Plan of any criminal convictions of any Contracted or sub-contracted Provider. Provider shall pay any costs associated with such criminal background checks.

7. Person-Centered Planning, Care/Service Plan, and Services ("PCSP"). Provider shall comply with all state and federal regulatory requirements related to person-centered planning, care/service plans, and services including, but not limited to:

7.1. Covered Persons shall lead the person-centered planning process and can elect to include, and/or consult with, any of their LTSS providers in the care/service plan development process.

7.2. The care/service plan must be finalized and agreed to, with the informed consent of the individual in writing, and signed by all individuals and providers responsible for its implementation through the mechanism required by state and federal requirements. Non-medical service providers (such as meals or assistive technology) can signify their agreement through this contract or written agreement in lieu of directly in the plan, if permitted by the Covered Persons.

7.3. LTSS Provider shall be aware of, respect, and adhere to a Covered Person's preferences for the delivery of services and supports.

7.4. LTSS Provider shall ensure services and supports are culturally appropriate, provided in plain language (where applicable), and accessible to Covered Persons and the person(s) supporting them who have disabilities and/or are limited English proficient.

7.5. Health Plan agrees to complete the care/service plan in a timely manner (within at least 120 days of enrollment or annually, or less if state requirements differ) and provide a copy to LTSS Provider(s) responsible for implementation.

PARTICIPATING PROVIDER AGREEMENT

SCHEDULE A-1
STATE-MANDATED PROVISIONS

Health Plan, Provider and Contracted Providers shall comply with the following provisions of this schedule, which are required by State law to be included in the Agreement, as such provisions may be amended from time to time by the State.

1. As used in this Agreement, the term "State" refers to the State of Texas.

2. No Retaliation. Health Plan shall not terminate, refuse to renew this Agreement or take any retaliatory action against Provider as a result of any complaints filed by Provider on behalf of a Covered Person or policyholder, against Health Plan or due to an appeal of a decision made by Health Plan.

3. No Indemnification. Health Plan shall not interpret any provision of this Agreement to require Provider to indemnify Health Plan for any tort liability resulting from the acts or omissions of Health Plan.

4. Posting of Complaint Notice. Provider shall post in its office a notice to Covered Persons regarding the process for resolving complaints with Health Plan. Such notices must include the Texas Department of Insurance's toll-free number for filing complaints.

5. Compliance with Prompt Payment Regulations. Payor will make payments to Provider for Covered Service(s) provided by a Contracted Provider to Medicaid Covered Persons within 30 days of its receipt of Clean Claims submitted in accordance with the requirements of this Agreement, subject to coordination of benefits rules and eligibility verification. Payor shall comply with the applicable requirements of TEX. INS. CODE chapter 843 and 28 TEX. ADMIN. CODE §§ 21.2801 *et.seq.* relating to the prompt payment of Clean Claims.

6. Special Rules Relating to Capitation Reimbursement. In the event that any of the Product Attachments provide for capitation reimbursement based on a Covered Person's primary care provider (PCP) selection, Payor will begin making payments calculated from that date of the Covered Person's enrollment which shall be no later than 60 days following the date the Covered Person selected or has been assigned to a PCP. If no such selection or assignment has been made within such 60 day period, the applicable capitation reimbursement shall be held by Payor in reserve until such time as there is a selection and retroactive payments can be made. Health Plan shall notify the PCP of his or her selection by a Covered Person within 30 business days of the selection or assignment.

   Payor will make capitation reimbursement payments to PCP on or before the 15th working day of the month in which services are provided.

7. Covered Person Hold Harmless. Provider shall look only to the applicable Payor and agree to hold Covered Persons harmless for compensation for all Covered Services provided to Covered Persons during the term of this Agreement. Under no circumstances, including but not limited to, nonpayment by Payor, Payor insolvency, or breach of this Agreement or an Attachment, shall Provider bill, charge, collect a deposit from, or seek compensation, remuneration, or reimbursement from, or have any recourse against, Medicare, Medicaid, Covered Persons or persons (other than Payor) acting on the Covered Persons' behalf (including but not limited to the applicable participating employer group or Payor) for Covered Services provided pursuant to this Agreement. This provision shall not prohibit collection of copayments on Payor's behalf made in accordance with the terms of the applicable Health Plan Coverage Agreement, nor does this provision affect the right of Provider to collect fees for services provided to Covered Persons which do not constitute Covered Services (unless Payor denied payment on the basis of lack of Medical Necessity or Provider's failure to comply with the terms and conditions of this Agreement or any Attachment) or for which Covered

Person has specifically otherwise assumed financial responsibility, in writing, prior to the time that services were rendered. Provider further agrees that this section shall: (i) survive the termination of this Agreement or any Attachment, regardless of the reason for termination; (ii) supersede any oral or written agreement now existing or hereafter entered into between Provider and a Covered Person, persons acting on the Covered Persons' behalf (other than Health Plan), and the participating employer, Payor, or group contract holder; and (iii) be construed to be for the benefit of Covered Persons, persons acting on the Covered Person's behalf (other than Health Plan), and the participating employer, Payor, or group contract holder. Any modifications, additions, or deletions to this provision shall be effective no earlier than 15 days after the Texas Commissioner of Insurance has received written notice of such changes.

8. Pre-termination Review. Prior to the termination of this Agreement by Health Plan, Health Plan shall provide a written explanation to Provider of the reasons for termination. Prior to the effective date of the termination, not later than 30 days following receipt of the written notification of termination, and to the extent required by the laws and regulations applicable to health maintenance organizations, Provider may request a review of Health Plan's proposed termination, to be held within a period not to exceed 60 days of Provider's request. At Provider's request, the review shall be conducted on an expedited basis. Such review shall be conducted by an advisory review panel composed of physicians and providers who are appointed to serve on Health Plan's quality improvement committee, and shall include, if available, at least one representative of Provider's specialty or a similar specialty. Health Plan shall consider, but shall not be bound by, the decision reached by the advisory review panel. Upon Provider's request, Health Plan shall provide Provider with a copy of this decision and of Health Plan's determination with respect to termination of this Agreement. This review shall not be required for termination under circumstances involving "Imminent Harm" as follows: (i) imminent harm to a Covered Person's health; (ii) fraud or misfeasance; or (iii) action by a state medical or other physician licensing board or other government agency that effectively impairs the ability of a Provider to practice medicine. Health Plan shall not notify Covered Persons of the termination until the earlier of the effective date of termination or the date that the advisory review panel makes its recommendations except in situations involving Imminent Harm.

9. Continuity of Treatment. Unless this Agreement terminates for reasons of medical competence or professional behavior, termination shall not release Payor of its obligation to compensate Provider for the continued care and treatment of any Covered Person who is under Special Circumstances (as defined below). As used in this section, "Special Circumstances" shall mean a Covered Person who has a disability, an acute condition, a life-threatening illness, who is past the 24th week of pregnancy, or who has a condition that Provider reasonably believes could cause harm to the Covered Person if such care or treatment is discontinued. To be reimbursed for providing continued care and treatment under this section, Provider must identify the Covered Person's Special Circumstances to Health Plan, request that the Covered Person be permitted to continue treatment under Provider's care and agree not to seek payment from the Covered Person of any amounts for which the Covered Person would not be responsible if this Agreement were not terminated. Compensation to Provider shall be in accordance with the fee schedule in effect as of the termination date. Treatment of Special Circumstances as described herein shall be governed by the dictates of medical prudence and Medical Necessity. The requirements of this section shall not extend beyond 90 days from the effective date of termination, or beyond nine months in the case of a Covered Person who at the time of the termination has been diagnosed with a terminal illness; provided, however, the obligation of the Payor for reimbursement to a Covered Person shall, for a pregnant Covered Person who at the time of termination is past the 24th week of pregnancy, extend through delivery of the child, immediate postpartum care, and the follow-up check-up within the first six weeks of delivery. In addition to the foregoing, termination shall not release Provider or Health Plan/Payor from liability to others with respect to services rendered to Covered Persons, monies paid, or other actions through the date of termination, nor shall it relieve Provider of his or her obligation not to bill Covered Persons for Covered Services. This section shall survive termination of this Agreement for any reason.

10. Disclosure of Claims Processing Information. Upon Provider's request, Health Plan shall provide information to assist Provider in determining that he or she is being compensated in accordance with this

Agreement. The information shall provide a level of detail sufficient to enable a reasonable person with sufficient training, experience and competence in claims processing to determine the payment to be made to Provider for Covered Services rendered pursuant to this Agreement. The information shall include a summary and explanation of the payment and reimbursement methodologies that Health Plan will use to pay Clean Claims submitted by Provider, including but not limited to fee schedules, coding methodologies, bundling processes, down coding policies, descriptions of any other applicable policy or procedure used by Health Plan that may affect payment to Provider, and any addenda, schedules, exhibits or policies used by Health Plan in carrying out the payment of Clean Claims submitted by Provider. Health Plan shall not charge Provider fees for accessing or obtaining copies of fee schedules or other information regarding claims payments. If source information outside the control of Health Plan, such as State Medicaid or federal Medicare fee schedules, is the basis for fee computation under this Agreement, Health Plan shall identify such source and explain the procedures by which Provider may readily access the source electronically, telephonically, or as otherwise agreed to by the parties. In complying with this section, Health Plan shall not be required to provide specific information that would violate any applicable copyright law or licensing agreement. In such circumstances, Health Plan shall provide a summary of the information withheld, which will allow a reasonable and sufficiently trained and experienced person to determine the payments to be made under this Agreement. Health Plan may provide the information by any reasonable method, including by email, computer disks, paper copies, or access to an electronic database, and shall provide the information within 10 days after Health Plan receives the Provider's request. Health Plan shall provide Provider with 90 days prior written notice of any amendments, revisions, or substitutions of the information required to be provided by Health Plan under this section.

Provider is prohibited by law and by this Agreement from using or disclosing the information provided to Health Plan pursuant to this section for any purpose other than Provider's practice management, billing activities, other business operations, or communications with a governmental agency involved in the regulation of health care or insurance. Provider may not use the information provided by Health Plan to knowingly submit a claim for payment that does not accurately represent the level, type or amount of services that were actually provided to a Covered Person or to misrepresent any aspect of the services. Provider may not rely upon information provided by Health Plan pursuant to this section about a service as a representation that a Covered Person is covered for that service under the terms of the Covered Person's Health Plan Coverage Agreement.

Upon receiving information under this section, Provider may terminate this Agreement on or before the 30th day after the date Provider received the information without penalty or discrimination in participation in other health care products or plans. Reasonable advance notice must be given to Covered Persons being treated by Provider prior to the termination.

11. Records Relating to Other Insurance. Provider shall retain in Provider's records updated information concerning a Covered Person's other health benefit plan coverage.

12. Access by Payors. Pursuant to this Agreement and notwithstanding anything herein to the contrary, Health Plan has Provider's permission and express authority to provide access to the health care products and services to be provided pursuant hereto, and the contractual discounts provided for herein, to any and all persons who are Payors, including without limitation, Health Plan, and all group customers of Health Plan (including self-funded employers and other organizations). Health Plan may sell, lease, or otherwise transfer information regarding the payment or reimbursement terms of this Agreement (and its Attachments) to such persons and Payors. Health Plan will provide prior notification to Provider of the persons and Payors to whom access is granted by providing the name of the Payor by electronic mail, through its provider newsletter or on its provider website; provided, however, Provider acknowledges that prior adequate notice has been provided with respect to Health Plan, and all self-funded groups existing as of the date hereof. Provider expressly acknowledges that Health Plan may provide the persons and Payors described above with access to Health Plan's rights and responsibilities under this Agreement. On request of Provider or a Contracted Provider, Health Plan will provide information necessary to determine whether a particular person has been

authorized to access the Provider's or a Contracted Provider's health care services and the contractual discounts provided for herein. To the extent required by applicable law, this Agreement specifies the applicable fee schedule for each Product and/or line of business contemplated by this Agreement. Each person or Payor granted access to the health care products and services and the contractual discounts hereunder must comply with all applicable terms, limitations, and conditions of this Agreement. Health Plan will provide such person or Payor with reasonable access, including electronic access, during normal business hours for the review of this Agreement, which access will be allowed only for the purposes of complying with the terms of this Agreement or applicable state law. Pursuant to its signature on the Product Attachments attached hereto, Provider provides its express authority with respect to each line of business and the fee schedule applicable to each such line of business.

PARTICIPATING PROVIDER AGREEMENT

SCHEDULE B
PRODUCT PARTICIPATION

Provider will be designated as a "Participating Provider" in the Product Attachments listed below as of the date of successful completion of credentialing in accordance with this Agreement.

List of Product Attachments:

Attachment A: Medicaid and CHIP
Attachment B: Medicare
Attachment C: Commercial-Exchange

PARTICIPATING PROVIDER AGREEMENT

SCHEDULE C
INFORMATION FOR CONTRACTED PROVIDERS

Provider shall provide Health Plan with the information set forth below with respect to: (i) Provider; (ii) each Contracted Provider; and (iii) if applicable, each Contracted Provider's locations and/or professionals. To the extent Provider provides the name of any Contracted Provider to Health Plan hereunder, such entity and/or individual will be considered a Contracted Provider under this Agreement regardless of whether the complete list of information set forth below relating to such Contracted Provider is provided by Provider.

1. Name
2. Address
3. E-mail address
4. Telephone and facsimile numbers
5. Professional license numbers
6. Medicare/Medicaid ID numbers
7. Federal tax ID numbers
8. Completed W-9 form
9. National Provider Identifier (NPI) numbers
10. Provider Taxonomy Codes
11. Area of medical specialty
12. Age restrictions (if any)
13. Area hospitals with admitting privileges (where applicable)
14. Whether Providers are employed or subcontracted with Contracted Provider using the designation "E" for employed or "C" for subcontracted.
15. For a subcontracted Provider, whether its Providers are employed or contracted with the subcontracted Provider using the designation "E" for employed or "C" for contracted.
16. Office contact person
17. Office hours
18. Billing office
19. Billing office address
20. Billing office telephone and facsimile numbers
21. Billing office e-mail address
22. Billing office contact person
23. Ownership Disclosure Form, as required to comply with Regulatory Requirements and Governmental Contract

NOTE: For a complete listing of the information and additional documentation required, please refer to the enrollment application.

Attachment A: Medicaid

PRODUCT ATTACHMENT
TEXAS MEDICAID AND CHIP

This Product Attachment ("***Product Attachment***") is incorporated into the provider agreement (the "***Agreement***") entered into by and between MCO (or "***Health Plan***") and Provider.

This Product Attachment is intended to supplement the Agreement by setting forth the Medicaid-specific, CHIP-specific, and Foster Care specific requirements with which Provider must comply in order to participate in the STAR, STAR+PLUS, STAR Kids, CHIP, CHIP Perinatal and/or Foster Care programs, as those terms are defined below. MCO may supplement this Product Attachment with any provisions necessary to comply with the requirements of any new or amended state Medicaid or CHIP programs in which MCO participates.

ARTICLE I
DEFINITIONS

The following terms, and any terms defined in the Agreement, shall have the specified meanings when capitalized in this Product Attachment. Citations to governmental authority requirements are provided herein for convenience only and shall not affect the meaning or interpretation of the terms of this Product Attachment. Such citations may become outdated as these governmental authority requirements are amended from time to time.

1.1. "**CHIP**" means the Children's Health Insurance Program as authorized under Title XXI of the federal Social Security Act and Texas Senate Bill 445, codified as Chapter 62, Texas Health & Safety Code.

1.2. "**Administrative Services Contractor**" (or "**ASC**") means an entity performing Medicaid managed care administrative services functions, including enrollment or claims payment functions, under contract with HHSC.

1.3. "**Caregiver**" means the DFPS-authorized caretaker for a Foster Care Covered Person, including the Foster Care Covered Person's foster parent(s), relative(s) or 24-hour child-care facility staff.

1.4. "**CHIP Perinate**" is an individual CHIP Perinatal Program beneficiary who is identified prior to birth and is enrolled to receive Covered Services from MCO pursuant to the terms of the CHIP Perinatal Contract.

1.5. "**CHIP Perinatal Contract**" means the agreements then in effect between MCO and the State of Texas, as revised or replaced from time to time, pertaining to the provision of Covered Services by MCO to its Covered Persons who are beneficiaries of the State CHIP Perinatal Program and who enroll to receive care through MCO.

1.6. "**CHIP Perinate Newborn**" means a CHIP Perinate who has been born alive.

1.7. "**CHIP Perinatal Program**" means the State of Texas program in which HHSC contracts with health maintenance organizations to provide, arrange for, and coordinate Covered Services for enrolled CHIP Perinate and CHIP Perinate Newborn members.

1.8. "**Clean Claim**" means a claim submitted by a Participating Provider for medical care or health care services rendered to a Covered Person, with all documentation reasonably necessary for MCO to process the claim. MCO may not require a Participating Provider to submit documentation that conflicts with the requirements of Texas Administrative Code, Title 28, Part 1, Chapter 21, Subchapters C and T.

1.9. "**Covered Person**" is an individual STAR, STAR+PLUS, STAR Kids, CHIP, CHIP Perinatal, or Foster Care beneficiary who is eligible and has enrolled to receive Covered Services from MCO pursuant to the terms of the STAR, STAR+PLUS, STAR Kids, CHIP, CHIP Perinatal, or Foster Care Contract. An "**Assigned Covered Person**" is a Covered Person who has chosen Provider to serve as his or her Primary Care Physician (PCP).

1.10. "**Covered Services**" means health care services MCO must arrange to provide to Covered Persons, including all services required by the HHSC Contract, state and federal law, and all value-added services negotiated by MCO and HHSC. Covered Services include, without limitation, acute care, behavioral health services, dental services, vision services, and court-ordered medical services.

1.11. "**DFPS**" means the Texas Department of Family and Protective Services or its successor agency.

1.12. "**Emergency Behavioral Health Condition**" means any condition, without regard to the nature or cause of the condition, which in the opinion of a prudent layperson possessing an average knowledge of health and medicine: (1) requires immediate intervention and/or medical attention without which Covered Persons would present an immediate danger to themselves or others, or (2) that renders Covered Persons incapable of controlling, knowing or understanding the consequences of their actions.

1.13. "**Emergency Care**" means health care services provided in a hospital emergency facility or comparable facility to evaluate and stabilize medical conditions of a recent onset and severity, including but not limited to severe pain, that would lead a prudent layperson, possessing an average knowledge of medicine and health, to believe that his or her condition, sickness, or injury is of such a nature that failure to get immediate medical care could result in: (1) placing the patient's health in serious jeopardy; (2) serious impairment to bodily functions; (3) serious dysfunction of any bodily organ or part; (4) serious disfigurement; or (5) in the case of a pregnant woman, serious jeopardy to the health of the fetus.

1.14. "**Emergency Medical Condition**" means a medical condition manifesting itself by acute symptoms of recent onset and sufficient severity (including severe pain), such that a prudent layperson, who possesses an average knowledge of health and medicine, could reasonably expect the absence of immediate medical care could result in:

(a) placing the patient's health in serious jeopardy;
(b) serious impairment to bodily functions;
(c) serious dysfunction of any bodily organ or part;
(d) serious disfigurement; or
(e) serious jeopardy to the health of a pregnant woman or her unborn child.

1.15. "**Emergency Services**" means covered inpatient and outpatient services furnished by a provider that is qualified to furnish such services under the HHSC Contract and that are needed to evaluate or stabilize an Emergency Medical Condition and/or an Emergency Behavioral Health Condition, including post-stabilization care services.

1.16. "**Foster Care Covered Person**" or "**FC Covered Person**" is an individual included within the definition of "Target Population" and enrolled under the CHPFC.

1.17. "**Foster Care Program**" means the State of Texas program in which HHSC contracts with health maintenance organizations to provide, arrange for, and coordinate Covered Services for Covered Persons who are in Foster Care.

1.18. "**Health Care Service Plan**" means an individualized plan developed with and for FC Covered Persons, among others, with special health care needs. The Health Care Service Plan includes, but is not limited to, the following:

(a) the FC Covered Person's history;
(b) summary of current medical and social needs and concerns;
(c) short and long term needs and goals;
(d) a treatment plan to address the FC Covered Person's physical, psychological, and emotional health care problems and needs including a list of services required, their frequency, and a description of who will provide such services.
(e) The Health Care Service Plan should incorporate as a component of the plan the Individual Family Service Plan ("**IFSP**") for FC Covered Persons in the Early Childhood Intervention ("**ECI**") Program

1.19. "**Health Passport**" means an electronic health record used to document information regarding medical services provided to an FC Covered Person.

1.20. "**HHSC**" means the Texas Health and Human Services Commission.

1.21. "**HHSC Programs**" means STAR, STAR+PLUS, STAR Kids, CHIP, CHIP Perinate and Foster Care.

1.22. "**Medicaid Comprehensive Healthcare Program for Foster Care**" (or "**CHPFC**") is the statewide program designed to provide comprehensive medical and behavioral health Medicaid services to members of the Target Population through a managed care provider network.

1.23. "**Medical Consenter**" means the person who may consent to medical care for the FC Covered Person under Chapter 266 of the Texas Family Code.

1.24. "**Medically Necessary**" means:

Non-behavioral health related health care services that are:

(a) reasonable and necessary to prevent illnesses or medical conditions, or provide early screening, interventions, and/or treatments for conditions that cause suffering or pain, cause physical deformity or limitations in function, threaten to cause or worsen a handicap, cause illness or infirmity of a Covered Person, or endanger life;
(b) provided at appropriate facilities and at the appropriate levels of care for the treatment of a Covered Person's health conditions;
(c) consistent with health care practice guidelines and standards that are endorsed by professionally recognized health care organizations or governmental agencies;
(d) consistent with the diagnoses of the conditions;
(e) no more intrusive or restrictive than necessary to provide a proper balance of safety, effectiveness, and efficiency;
(f) are not experimental or investigative; and
(g) are not primarily for the convenience of the Covered Person or Provider; and

Behavioral health services that are:

(a) are reasonable and necessary for the diagnosis or treatment of a mental health or chemical dependency disorder, or to improve, maintain, or prevent deterioration of functioning resulting from such a disorder;
(b) are in accordance with professionally accepted clinical guidelines and standards of practice in behavioral health care;
(c) are furnished in the most appropriate and least restrictive setting in which services can be safely provided;
(d) are the most appropriate level or supply of service that can safely be provided;
(e) could not be omitted without adversely affecting the Covered Person's mental and/or physical health or the quality of care rendered;
(f) are not experimental or investigative; and
(g) are not primarily for the convenience of the Covered Person or Provider.

1.25. "**Primary Care Provider**" or "**PCP**" means a physician or provider who has agreed with the MCO to be responsible for providing initial and primary care to patients, maintaining the continuity of patient care, and initiating referral for care. For those Covered Persons in the Foster Care Program: a PCP has agreed to provide a medical home in addition to all other items stated herein.

1.26. "**PCP Team**" means a Covered Person's PCP, other providers, and the Covered Person's Medical Consenter, who agree to function as an interdisciplinary team. If requested by the Covered Person's Medical Consenter, the Covered Person's Caregiver may be included in the PCP Team. The PCP Team may also include an FC Covered Person's DFPS caseworker and MCO Service Coordinator.

1.27. "**Service Manager(s)**" perform the functions of Service Management.

1.28. "**STAR**" (which stands for State of Texas Access Reform) is the program in Texas that provides managed care services for beneficiaries of the State Medicaid program.

1.29. "**STAR Kids**" is the managed care program in Texas for recipients under the age of 21 who receive Supplemental Security Income ("**SSI**") or SSI-related Medicaid.

1.30. "**STAR+PLUS**" is the Medicaid managed care program in Texas that provides and coordinates preventive, primary, acute and long term care to adult persons with disabilities and elderly persons age 65 and over who qualify for Medicaid through SSI/MAO (Medical Assistance Only).

1.31. "**STAR, STAR+PLUS, STAR Kids and CHIP Contracts**" or "**State Contracts**" means the agreements then in effect between MCO and the State, as revised or replaced from time to time, including, but not limited to, the STAR, STAR+PLUS, STAR Kids and CHIP Contracts awarded to MCO pursuant to the STAR, STAR+PLUS, STAR Kids and CHIP programs as implemented by the State. It also includes the CHIP Perinatal Contract(s).

1.32. "**State Agency**" means the State agency which administers the STAR, STAR+PLUS, STAR Kids, CHIP (including CHIP Perinatal) and Foster Care managed care programs, as implemented from time to time.

1.33. "**Substitute Care**" means the placement of a child or young adult who is in the conservatorship of DFPS in care outside the child's or young adult's home. The term includes foster care, institutional care, adoption or placement with a relative of the child or young adult.

1.34. "**Target Population**" means children and young adults in Substitute Care and/or one of the following categories: (1) DFPS conservatorship, (2) emancipated minors and young adults age 18-22 who voluntarily agree to continue in a foster care placement, or (3) young adults who have exited foster care and are participating in the foster care youth transitional Medicaid program.

1.35. "**Texas Health Steps**" is the name adopted by the state of Texas for the federally mandated EPSDT program. It includes the State's Comprehensive Care Program extension to Early and Periodic Screening, Diagnostic and Treatment (EPSDT), which adds benefits to the federal EPSDT requirements contained in 42 U.S.C. §1396d(r), and defined and codified at 42 C.F.R. §§440.40 and 441.56-62. HHSC's rules are contained in 25 T.A.C., Chapter 33 (relating to EPSDT).

ARTICLE II
COMPLIANCE WITH STATE AGENCY REQUIREMENTS

2.1. Provider agrees to provide, at no cost, to the HHSC: (a) all information required under the State Contracts, including but not limited to the reporting requirements and other information related to the Provider's performance of its obligations under the Agreement; and (b) any information in its possession sufficient to permit HHSC to comply with the federal Balanced Budget Act of 1997 or other federal or State laws, rules, and regulations. All information must be provided in accordance with the timelines, definitions, formats and instructions specified by HHSC.

2.2. Upon receipt of a record review request from the Health and Human Services Commission Office of Inspector General ("**OIG**") or another state or federal agency authorized to conduct compliance, regulatory, or program integrity functions, Provider must provide, at no cost to the requesting state or federal agency, the records request within three business days of the request. If the OIG or another state or federal agency representative reasonably believes that the requested records are about to be altered or destroyed or that the request may be completed at the

time of the request and/or in less than 24 hours, Provider must provide the records requested at the time of the request and/or in less than 24 hours. The request for record review includes, but is not limited to clinical medical or dental Covered Person records; other records pertaining to the Covered Person; any other records of services provided to Medicaid or other health and human services program recipients and payments made for those services; documents related to diagnosis, treatment, service, lab results, charting; billing records, invoices, documentation of delivery items, equipment, or supplies; radiographs and study models related to orthodontia services; business and accounting records with backup support documentation; statistical documentation; computer records and data; and/or contracts with providers and subcontractors. Failure to produce the records or make the records available for the purpose of reviewing, examining and securing custody of the records may result in OIG imposing sanctions against Provider as described in Title 1 Tex. Admin. Code, Chapter 371 Subchapter G.

2.3. Updates to Contact Information. Provider must inform both the MCO and HHSC's administrative services contractor of any changes to Provider's address, telephone number, group affiliation, etc.

2.4. Provider must comply with the requirements of state and federal laws, rules and regulations relating to advance directives.

2.5. Provider agrees to provide, at no cost, the following entities or their designees with prompt, reasonable, and adequate access to the Agreement and any records, books, documents, and papers that are related to the Agreement and/or the Provider's performance of its responsibilities under the State Contracts:

a) MCO program Personnel from HHSC or its designee;
b) The U.S. Department of Health and Human Services or its designee;
c) The Office of Inspector General;
d) The Texas Medicaid Fraud Control Unit of the Texas Attorney General's Office or its designee;
e) Any independent verification and validation contractor, audit firm, or quality assurance contractor acting on behalf of HHSC;
f) A state or federal law enforcement agency;
g) A special or general investigating committee of the Texas Legislature or its designee;
h) The U.S. Comptroller General or its designee;
i) The Office of the State Auditor of Texas or its designee; and
j) Any other state or federal entity identified by HHSC, or any other entity engaged by HHSC.

2.6. Provider must provide access wherever it maintains such records, books, documents, and papers and Provider must provide such access in reasonable comfort and provide any furnishings, equipment, and other conveniences deemed reasonably necessary to fulfill the purposes described herein. Requests for access may be for, but are not limited to, the following purposes: examination; audit; investigation; contract administration; the making of copies, excerpts or transcripts; or any other purpose HHSC deems necessary for contract enforcement or to perform its regulatory functions.

2.7. Provider understands and agrees that the acceptance of funds under this contract acts as acceptance of the authority of the State Auditor's Office ("**SAO**"), or any successor agency, to conduct an investigation in connection with those funds. Provider further agrees to cooperate fully with the SAO or its successor in the conduct of the audit or investigation, including providing all records requested at no cost.

2.8. If Provider is a PCP, Provider must have screening and evaluation procedures for detection and treatment of, or referral for, any known or suspected behavioral health problems and disorders.

2.9. If Provider provides inpatient psychiatric services to a Covered Person, Provider must schedule the Covered Person for outpatient follow-up and/or continuing treatment prior to discharge. The outpatient treatment must occur within seven days from the date of discharge. Behavioral health service providers must contact Covered Persons who have missed appointments within 24 hours to reschedule such appointments.

2.10. In order to submit a Clean Claim, Provider must provide the information set forth under Clean Claims in the Provider Manual.

2.11. MCO shall inform Provider about the information required to submit a claim at least 30 days prior to the operational start date of the State Contract(s). Such claims submission requirements, including claims coding and processing guidelines, are found in MCO's Provider Manual, which is a part of the Agreement.

2.12. MCO will provide the Provider at least 90 days notice prior to implementing a change in the claims guidelines set forth in the Provider Manual, unless the change is required by statute or regulation in a shorter timeframe.

2.13. The Provider Manual includes information concerning which entity/entities Provider must submit claims to for processing and/or adjudication. MCO must notify Provider in writing of any changes in the list of claims processing or adjudication entities at least 30 days prior to the effective date of change. If MCO is unable to provide 30 days notice, MCO must give Provider a 30-day extension on their claims filing deadline to ensure claims are routed to the correct processing center.

2.14. Payment of Clean Claims. All provider claims shall be processed within 30 days from the date of claim receipt by the MCO. All provider claims that are Clean Claims shall be adjudicated (finalized as paid or denied) within 30 days from the date of claim receipt. MCO shall offer Provider the option of submitting and receiving claims information through electronic data interchange ("**EDI**") that allows for automated processing and adjudication of claims. EDI processing must be offered as an alternative to the filing of paper claims. Electronic claims must use HIPAA-compliant electronic formats. MCO shall pay Provider interest at a rate of 1.5% per month (18% per annum), calculated daily, for the full period in which the Clean Claim remains unadjudicated beyond the 30-day claims processing deadline.

2.15. Providers must comply with the requirements of Texas Government Code §531.024161, regarding the submission of claims involving supervised providers.

2.16. Provider acknowledges and agrees that program violations arising out of performance of the Agreement are subject to administrative enforcement by the Texas Health and Human Services Commission Office of Inspector General as specified in Title 1 Tex. Admin. Code, Chapter 371 Subchapter G.

2.17. The Provider Manual includes information concerning the complaint and appeal process that applies to Participating Providers.

2.18. Provider understands and agrees that HHSC reserves the right and retains the authority to make reasonable inquiry and to conduct investigations into Provider and Covered Person complaints.

2.19. Provider must treat all information that is obtained through the performance of the services included in this Product Attachment as confidential information to the extent that confidential treatment is provided under state and federal laws, rules, and regulations. This includes, but is not limited to, information relating to applicants or recipients of HHSC Programs.

2.20. Provider shall not use information obtained through the performance of the Agreement in any manner except as is necessary for the proper discharge of obligations and securing of rights under the Agreement.

2.21. Provider shall protect the confidentiality of Covered Person Protected Health Information ("**PHI**"), including patient records. Provider must comply with all applicable federal and State laws, including the HIPAA Privacy and Security Rule governing the use and disclosure of protected health information.

2.22. Provider must cooperate and coordinate with local ECI programs to comply with federal and state requirements relating to the development, review and evaluation of IFSP. Provider understands and agrees that any Medically Necessary health and behavioral health services contained in an IFSP must be provided to the Covered Person in the amount, duration, scope and setting established in the IFSP.

2.23. If a Covered Person requests contraceptive services or family planning services, Provider must also provide the Covered Person counseling and education about family planning and available family planning services.

2.24. Provider cannot require parental consent for Covered Persons who are minors to receive family planning services.

2.25. Provider must comply with state and federal laws and regulations governing Covered Person confidentiality (including minors) when providing information on family planning services to Covered Persons.

2.26. Provider understands and agrees to the following:

(a) HHSC OIG and/or the Texas Medicaid Fraud Control Unit must be allowed to conduct private interviews of Provider, Provider's employees, agents, contractors, and patients;
(b) requests for information from such entities must be complied with, in the form and language requested;
(c) Provider and Provider's employees, agents, and contractors must cooperate fully with such entities in making themselves available in person for interviews, consultation, grand jury proceedings, pre-trial conference, hearings, trials and in any other process, including investigations at the Provider's own expense; and
(d) Compliance with these requirements will be at Provider's own expense.

2.27. Provider understands and agrees to the following:

(a) Provider is subject to all state and federal laws and regulations relating to fraud, abuse or waste in health care or dental care and the Medicaid, Foster Care and/or CHIP Programs, as applicable;
(b) Provider must cooperate and assist HHSC and any state or federal agency that is charged with the duty of identifying, investigating, sanctioning or prosecuting suspected fraud, abuse or waste;
(c) Provider must provide originals and/or copies of any and all information, allow access to premises, and provide records to the Office of Inspector General, HHSC, the Centers for Medicare and Medicaid Services ("CMS"), the U.S. Department of Health and Human Services, FBI, Texas Department of Insurance ("TDI"), the Texas Attorney General's Medicaid Fraud Control Unit or other unit of state or federal government, upon request, and free-of-charge;
(d) If Provider places required records in another legal entity's records, such as a hospital, Provider is responsible for obtaining a copy of these records for use by the above-named entities or their representatives; and
(e) Provider must report any suspected fraud or abuse including any suspected fraud and abuse committed by the MCO or a Covered Person to the HHSC Office of Inspector General.

2.28. Provider understands and agrees that if Provider receives annual Medicaid payments of at least $5 million (cumulative, from all sources), Provider must:

(a) Establish written policies for all employees, managers, officers, contractors, subcontractors, and agents of Provider. The policies must provide detailed information about the False Claims Act, administrative remedies for false claims and statements, any state laws about civil or criminal penalties for false claims, and whistleblower protections under such laws, as described in Section 1902(a)(68)(A) of the Social Security Act.
(b) Include as part of such written policies detailed provisions regarding the Provider's policies and procedures for detecting and preventing Fraud, Waste, and Abuse.
(c) Include in any employee handbook a specific discussion of the laws described in Section 1902(a)(68)(A), the rights of employees to be protected as whistleblowers, and Provider's policies and procedures for detecting and preventing Fraud, Waste, and Abuse.

2.29. Provider understands and agrees that it is subject to all state and federal laws, rules, regulations, waivers, policies and guidelines, and court-ordered consent decrees, settlement agreements, or other court orders that apply to

the Agreement; MCO's contract(s) with HHSC; the Medicaid, CHIP, and Foster Care Programs; and, all persons or entities receiving state and federal funds. Provider understands and agrees that any violation by a provider of a state or federal law relating to the delivery of services pursuant to the Agreement, or any violation of MCO's contract(s) with HHSC could result in liability for money damages, and/or civil or criminal penalties and sanctions under state and/or federal law.

2.30. Provider understands and agrees that the following laws, rules, and regulations, and all amendments or modifications thereto, apply to the Agreement:

i) environmental protection laws:

(a) Pro-Children Act of 1994 (20 U.S.C. §6081 et seq.) regarding the provision of a smoke-free workplace and promoting the non-use of all tobacco products;
(b) National Environmental Policy Act of 1969 (42 U.S.C. §4321 et seq.) and Executive Order 11514 ("Protection and Enhancement of Environmental Quality") relating to the institution of environmental quality control measures;
(c) Clean Air Act and Water Pollution Control Act regulations (Executive Order 11738, "Providing for Administration of the Clean Air Act and Federal Water Pollution Control Act with Respect to Federal Contracts, Grants, and Loans");
(d) State Clean Air Implementation Plan (42 U.S.C. §740 et seq.) regarding conformity of federal actions to State Implementation Plans under §176(c) of the Clean Air Act; and
(e) Safe Drinking Water Act of 1974 (21 U.S.C. §349; 42 U.S.C. §300f to 300j-9) relating to the protection of underground sources of drinking water.

ii) state and federal anti-discrimination laws:

(a) Title VI of the Civil Rights Act of 1964 (42 U.S.C. § 2000d et seq.) and as applicable 45 C.F.R. Part 80 or 7 C.F.R. Part 15;
(b) Section 504 of the Rehabilitation Act of 1973(29 U.S.C. § 794);
(c) Americans with Disabilities Act of 1990 (42 U.S. Code § 12101 et seq.);
(d) Age Discrimination Act of 1975 (42 U.S.C. §§ 6101-6107);
(e) Title IX of the Education Amendments of 1972 (20 U.S.C. §§ 1681-1688);
(f) Food Stamp Act of 1977 (7 U.S.C. § 200 et seq.);
(g) Executive Order 13279, and its implementing regulations at 45 C.F.R. Part 87 or 7 C.F.R. Part 16); and
(h) the HHS agency's administrative rules, as set forth in the Texas Administrative Code, to the extent applicable to the Agreement.

iii) the Immigration and Nationality Act (8 U.S.C. §1101 et seq.) and all subsequent immigration laws and amendments;

iv) the Health Insurance Portability and Accountability Act of 1996 ("**HIPAA**") (Public Law 104-191); and,

v) the Health Information Technology Act for Economic and Clinical Health Act (HITECH Act) at 42 U.S.C. § 17931 et seq.

2.31. In the event MCO becomes insolvent or ceases operations, Provider understands and agrees that its sole recourse against MCO will be through MCO's bankruptcy, conservatorship, or receivership estate. Provider understands and agrees that Covered Persons may not be held liable for MCO's debts in the event of the entity's insolvency.

2.32. Provider understands and agrees that the HHSC does not assume liability for the actions of, or judgments rendered against, MCO, its employees, agents or subcontractors. Further, Provider understands and agrees that there

is no right of subrogation, contribution, or indemnification against HHSC for any duty owed to Provider by MCO or any judgment rendered against MCO. HHSC's liability to Provider, if any, will be governed by the Texas Tort Claims Act, as amended or modified (Tex. Civ. Pract. & Rem. Code §101.001 et seq.).

2.33. Provider agrees to comply with state and federal laws, rules, and regulations governing marketing. In addition, the Provider agrees to comply with HHSC's marketing policies and procedures, as set forth in HHSC's Uniform Managed Care Manual.

2.34. Provider is prohibited from engaging in direct marketing to Covered Persons that is designed to increase enrollment in a particular health plan. This prohibition does not constrain Provider from engaging in permissible marketing activities consistent with broad outreach objectives and application assistance.

2.35. MCO will initiate and maintain any action necessary to stop a Provider or a Provider's employee, agent, assign, trustee, or successor-in-interest from maintaining an action against HHSC, an HHS Agency, or any Covered Person to collect payment from HHSC, an HHS Agency, or any Covered Person, excluding payment for non-covered services. This provision does not restrict a CHIP Network Provider from collecting allowable copayment and deductible amounts from CHIP Covered Persons.

2.36. Provider must be licensed in the State of Texas to provide the Covered Services for which the MCO is contracting with Provider, and not be under sanction or exclusion from the Medicaid program. If Provider is serving Medicaid Covered Persons, he/she must be enrolled as a Medicaid provider and have a Texas Provider Identification Number ("**TPIN**"). Effective May 23, 2007, Provider (those serving both Medicaid and CHIP Covered Persons) must also have a National Provider Identification Number ("**NPI**") (see 45 C.F.R. Part 162, Subpart D).

2.37. MCO is prohibited from imposing restrictions upon Provider's free communication with a Covered Person about the Covered Person's medical conditions, treatment options, MCO referral policies, and other MCO policies, including financial incentives or arrangements and all managed care plans with whom the Provider contracts.

2.38. Provider is prohibited from billing or collecting any amount from a Covered Person for Covered Services provided pursuant to the Agreement. Federal and State laws provide severe penalties for any provider who attempts to bill or collect any payment from a Medicaid recipient for a Covered Service.

2.39. If Provider is a PCP, Provider's services must be accessible to Covered Persons 24 hours per day, 7 days per week, and Provider must have acceptable after-hours telephone availability.

2.40. While performing the services described in the Agreement, Provider agrees to comply with applicable state laws, rules, and regulations and HHSC's requests regarding personal and professional conduct generally applicable to the service locations, and otherwise conduct themselves in a businesslike and professional manner.

2.41. Provider agrees to comply with the MCO's Quality Assurance/Performance Improvement (QAPI) program requirements.

2.42. MCO must follow the procedures outlined in the applicable state and federal law regarding termination of a provider contract, including requirements to Insurance Code § 843.306 and Tex. Admin Code § 11.901.

2.43. Termination of Provider Contracts. Unless prohibited or limited by applicable law, as soon as possible and at least 30 days prior to the effective date of the MCO's termination of the Agreement, MCO must provide written notice to (i) Provider that it will no longer be a part of the Participating Provider network; (ii) the HHSC Administrative Services Contractor; and, (iii) affected Covered Persons. Affected Covered Persons include all Covered Persons in a PCP's panel and all Covered Persons who have been receiving ongoing care from the terminated Provider, where ongoing care is defined as two or more visits for home-based or office-based care in the past 12 months.

2.44. Provider may not offer or give any thing of value to an officer or employee of HHSC or the State of Texas in violation of state law. A "thing of value" means any item of tangible or intangible property that has a monetary value of more than $50.00 and includes, but is not limited to, cash, food, lodging, entertainment and charitable contributions. The term does not include contributions to public office holders or candidates for public office that are paid and reported in accordance with state and/or federal law. MCO may terminate the Agreement at any time for violation of this requirement.

2.45. Provider understands and agrees that it may not interfere with or place any liens upon the state's right or MCO's right, acting as the state's agent, to recovery from third party resources.

2.46. Texas Health Steps providers must send all Texas Health Steps newborn screens to the Texas Department of State Health Services ("**DSHS**"), formerly the Texas Department of Health, Bureau of Laboratories or a DSHS-certified laboratory. Such providers must include detailed identifying information for all screened newborn Covered Persons and each Covered Person's mother to allow HHSC to link the screens performed at the hospital with screens performed at the two-week follow-up.

2.47. Provider must coordinate with the local tuberculosis (TB) control program to ensure that all Covered Persons with confirmed or suspected TB have a contact investigation and receive Directly Observed Therapy ("**DOT**"). Provider must report to the DSHS or the local TB control program any member who is non-compliant, drug resistant, or who is or may be posing a public health threat.

2.48. Provider must coordinate with the Women, Infants, and Children ("**WIC**") Special Supplemental Nutrition Program to provide medical information necessary for WIC eligibility determinations, such as height, weight, hematocrit or hemoglobin.

2.49. If Provider is a PCP, Provider must provide preventive care (1) to children under age 21 in accordance with the American Academy of Pediatrics ("**AAP**") recommendations for CHIP Covered Persons and CHIP Perinatal Newborns; and the Texas Health Steps periodicity schedule found in the Texas Health Steps Manual for Medicaid and Foster Care Covered Persons, and (2) to adults in accordance with the U.S. Preventative Task Force requirements.

2.50. If Provider is a PCP, Provider must assess the medical and behavioral health needs of Covered Persons for referral to specialty care providers and provide referrals as needed. PCPs must coordinate Covered Persons' care with specialty care providers after referral. Foster Care Covered Persons can access behavioral health treatment without prior approval from the PCP. PCPs must serve as a medical home to Covered Persons.

2.51. Provider must inform Covered Persons of the costs for non-covered services prior to rendering such services and obtain a signed Private Pay form from such Covered Persons.

2.52. Provider understands and agrees that HHSC is not liable or responsible for payment for Covered Services rendered pursuant to the Agreement.

2.53. Provider is responsible for collecting at the time of service any applicable CHIP co-payments or deductibles in accordance with CHIP cost-sharing limitations.

2.54. Provider shall not charge: (i) cost-sharing or deductibles to CHIP Covered Persons of Native American Tribes or Alaskan Natives; (ii) co-payments or deductibles to a CHIP Covered Person with an identification card that indicates the Covered Person has met his or her cost-sharing obligation for the balance of their term of coverage; and (iii) co-payments for well-child or well-baby visits or immunizations.

2.55. Co-payments are the only amounts that Provider may collect from CHIP Covered Persons except for costs associated with unauthorized non-emergency services provided to a CHIP Covered Person by out-of-network providers for non-covered services.

2.56. MCO shall not pay any claim submitted by Provider if Provider has been excluded or suspended from the Medicare, Medicaid, or CHIP programs for fraud and abuse. MCO shall not pay any claim submitted by Provider if Provider is on payment hold under the authority of HHSC or its authorized agent(s), or has pending accounts receivable with HHSC.

2.57. Provider shall comply with the HIPAA confidentiality provisions of the Agreement.

2.58. Provider shall comply with the professional liability insurance provisions of the Agreement.

2.59. Provider acknowledges and agrees that the Provider Manual is incorporated into the Agreement by reference.

2.60. Provider understands that CHIP Perinate Newborns are eligible for 12 months continuous enrollment, beginning with the month of enrollment as a CHIP Perinate. A CHIP Perinate Newborn will maintain coverage in his or her CHIP Perinatal health plan.

2.61. Provider understands that when a Covered Person enrolls in MCO's CHIP Perinatal Plan, all traditional CHIP members in the Covered Person's household will be disenrolled from their current health plans and prospectively enrolled in MCO's traditional CHIP Plan. All members of the household must remain in MCO's CHIP Plan through the end of the Covered Person's enrollment period.

2.62. Provider agrees to provide CHIP Perinatal Covered Services to Covered Persons as set forth in the HHSC Uniform Managed Care Contract Terms and Conditions, Attachment B-2.2, and any corresponding guidelines published by HHSC.

2.63. For STAR+PLUS Covered Persons, all home and community support services agency providers, adult day care providers, and residential care facility providers must notify MCO if a Covered Person experiences any of the following:

i) a significant change in the Covered Person's physical or mental condition or environment;
ii) hospitalization
iii) an emergency room visit, or
iv) two or more missed appointments.

2.64. Electronic Visit Verification (EVV): Providers using the EVV system must maintain compliance with HHSC minimum standards detailed in UMCM, Chapter 8.7, Section IX.

2.65. Lead screening: In accordance with Texas Health & Safety Code Chapter 88 and related rules at 25 Tex. Admin. Code Chapter 37, Subchapter Q, Providers must (1) report all blood lead results to the Childhood Lead Poisoning Program (if not performed at the DSHS state laboratory) and (2) follow-up on suspected or confirmed cases of childhood lead exposure with the Childhood Lead Poisoning Prevention Program, and follow the Centers for Disease Control and Prevention guidelines for testing children for lead and follow-up actions for children with elevated lead levels located at http://www.dshs.state.tx.us/lead/pdf_files/pb_109_physician_reference.pdf.

2.66. Provider must comply with 25 Tex. Admin. Code, Part 1 Chapter 415, Subchapter F, "Interventions in Mental Health Services," when providing Mental Health Rehabilitation Services and Mental Health Targeted Case Management, as applicable.

2.67. Provider must provide services within the following timeframes, as applicable to Provider's type:

(a) Emergency Services, including behavioral health services, must be provided upon Covered Person presentation at the service delivery site, including at non-network and out-of-area facilities;
(b) urgent care, including urgent specialty care, must be provided within 24 hours;
(c) routine primary care must be provided within 14 days;
(d) initial outpatient behavioral health visits must be provided within 14 days;

(e) PCPs must make referrals for specialty care on a timely basis, based on the urgency of the Covered Person's medical condition, but no later than 5 days;
(f) Non-urgent specialty care must be provided within 60 days of authorization;
(g) pre-natal care must be provided within 14 days, except for high-risk pregnancies or new Covered Persons in the third trimester, for whom an appointment must be offered within five days, or immediately, if an emergency exists;
(h) preventive health services for adults must be offered within 90 days; and
(i) preventive health services for children, including well-child checkups should be offered to CHIP Covered Persons in accordance with the AAP periodicity schedule. Medicaid MCOs should utilize the Texas Health Steps periodicity schedule. For a New Member birth through age 20, overdue or upcoming well-child checkups, including Texas Health Steps medical checkups, should be offered as soon as practicable, but in no case later than 14 days of enrollment for newborns, and no later than 90 days of enrollment for all other eligible child Covered Persons. The Texas Health Steps annual medical checkup for an Existing Member age 36 months and older is due on the child's birthday. The annual medical checkup is considered timely if it occurs no later than 364 calendar days after the child's birthday. For purposes of this requirement, the terms "New Member" and "Existing Member" are defined in Chapter 12.4 of the "Uniform Managed Care Manual."

2.68. Cancellation of product orders: A Provider that offers delivery services for covered products, such as durable medical equipment ("**DME**"), limited home health supplies ("**LHHS**"), or outpatient drugs or biological products must reduce, cancel, or stop delivery if the Covered Person or Covered Person's authorized representative submits an oral or written request. Provider must maintain records documenting the request.

2.69. Provider agrees that all work performed under the Agreement must be performed exclusively within the United States unless it is subject to the exceptions specified herein below. Provider agrees that all information obtained must be stored and maintained within the United States. Provider must not allow any confidential information to be moved outside the United States by any means and must not permit any person to have remote access to information, systems, or deliverables from a location outside the United States. Further, Provider must not permit any person to have remote access to HHSC information, systems, or deliverables from a location outside the United States. This obligation includes, but is not limited to, all services, including but not limited to information technology services, processing, transmission, storage, archiving, data center services, disaster recovery sites and services, customer support, medical, dental, laboratory and clinical services. Provider's violation of this section will constitute a material breach of the Agreement. Provider will be liable to MCO for all monetary damages, in the form of actual, consequential, direct, indirect, special and/or liquidated damages in accordance with the Agreement.

(a) Exceptions to the Prohibition:

i) COTS Software. The acquisition or use of commercial off-the-shelf (COTS) software that is developed outside of the US or hardware that is generically configured outside the US.
ii) Foreign-Made Products or Supplies: The acquisition, use, or reimbursement of products or supplies that are manufactured outside the United States, provided such products or supplies are commercially available within the United States.

2.70. Provider must inform MCO of any reports of abuse, neglect, or exploitation made regarding a Covered Person. This includes provider self-reports and reports made by others that the provider becomes aware of.

ARTICLE III
STAR HEALTH/FOSTER CARE PROGRAM ONLY

3.1 If Provider is a behavioral health provider, Provider must: (1) submit to the MCO for inclusion into the Health Passport treatment plans and referrals to other providers; (2) document the outcome measurement scores in the Health Passport; (3) function as a member of the PCP Team by coordinating with the PCP and Service Manager as appropriate; and (4) testify in court as needed for child protection litigation.

3.2 Provider must comply with medical consent requirements in Texas Family Code §266.004 that require the FC Covered Person's Medical Consenter to consent to the provision of medical care. Provider does not need the medical consent of the FC Covered Person's Medical Consenter to provide Emergency Services for a FC Covered Person that has an Emergency Medical Condition. Provider must notify the Medical Consenter about the provision of Emergency Services no later than the second business day after providing Emergency Services, as required by Texas Family Code §266.009. The notification must be documented in the FC Covered Person's Health Passport.

3.3 If Provider is a PCP, Provider must comply with the following to participate in the CHPFC:

(a) Either be enrolled as a Texas Health Steps provider or refer FC Covered Persons due for a Texas Health Steps checkup to a Texas Health Steps provider;

(b) Refer FC Covered Persons for follow-up assessments or interventions clinically indicated as a result of the Texas Health Steps checkup, including the developmental and behavioral components of the screening; and

(c) Submit information from the Texas Health Steps forms and documents to the Health Passport

3.4 If Provider is a behavioral health provider, Provider must provide a monthly summary form, to be provided by MCO. The following information must be included in the monthly summary form for the Health Passport:

(a) Primary and secondary (if present) diagnosis.

(b) Assessment information, including results of a mental status exam.

(c) Brief narrative summary of the Covered Person's clinical visits/progress.

(d) Scores on each outcome rating form(s).

(e) Referrals to other providers or community resources.

(f) Health Care Service Plans and referrals to providers.

(g) Evaluations of each Covered Person's progress at intake, monthly, and at termination of the Health Care Service Plan, or as significant changes are made in the treatment plan.

(h) Any other relevant care information.

3.5 At the request of HHSC for DFPS, Provider must testify in court as needed for child protection litigation relating to FC Covered Persons.

3.6 Health Passports. MCO and the FC Covered Person's Providers, as appropriate, will be responsible for updating each FC Covered Person's Health Passport with the required medical information. Provider shall submit all applicable information for the Health Passport either (i) by inputting data directly into the Health Passport at the point of service through a web-based interface or (ii) submitting the required information to MCO for entry into the Health Passport.

3.7 If Provider is a PCP, Provider must use the Texas Health Steps behavioral health forms, at a minimum, for the detection and treatment of, or referral for, any known or suspected behavioral health problems and disorders including possible substance abuse or chemical dependency. Provider must submit completed Texas Health Steps screening and evaluation results to the MCO to include in the Health Passport.

3.8 Provider must comply with the most recent *"Psychotropic Medication Utilization Parameters for Foster Children"* found at https:www.dfps.texas.gov/Child_Protection/Medical_Services/Psychotropic_Medications.asp.

ARTICLE IV
ADDITIONAL STATE REQUIREMENTS

Provider acknowledges and agrees that, following the effective date of this Product Attachment, the State Agency may require that new or modified provisions be included in this Product Attachment. In such event, MCO shall notify Provider in writing of the new or modified provisions to be incorporated into this Product Attachment, and Provider shall comply with such provisions as of the compliance effective date established by the State.

ARTICLE V
CMS REGULATORY REQUIREMENTS

5.1 Person-Centered Planning, Care/Service Plan, and Services. Provider shall comply with all state and federal regulatory requirements related to person-centered planning, care/service plans, and services including, but not limited to:

(a) Covered Persons shall lead the person-centered planning process and can elect to include, and/or consult with, any of their long-term services and supports (LTSS) providers in the care/service plan development process.

(b) The care/service plan must be finalized and agreed to, with the informed consent of the individual in writing, and signed by all individuals and providers responsible for its implementation through the mechanism required by state and federal requirements. Non-medical service providers (such as meals or assistive technology) can signify their agreement through this contract or written agreement in lieu of directly in the plan, if permitted by the member.

(c) LTSS providers shall be aware of, respect, and adhere to a member's preferences for the delivery of services and supports.

(d) LTSS providers shall ensure services and supports are culturally appropriate, provided in plain language (where applicable), and accessible to members and the person(s) supporting them who have disabilities and/or are limited English proficient.

(e) Health Plan agrees to complete the care/service plan in a timely manner (within at least 120 days of enrollment or annually, or less if state requirements differ) and provide a copy to all LTSS providers responsible for implementation.

Attachment A: Medicaid

EXHIBIT 1
COMPENSATION SCHEDULE
TEXAS MEDICAID
PROFESSIONAL SERVICES

County of Tarrant dba Tarrant County Public Health

This compensation schedule ("Compensation Schedule") sets forth the maximum reimbursement amounts for medical and behavioral health Covered Services provided by Contracted Providers to Covered Persons enrolled in a Medicaid Product. Where the Contracted Provider's tax identification number ("TIN") has been designated by the Payor as subject to this Compensation Schedule, Payor shall pay or arrange for payment of a Clean Claim for Covered Services rendered by the Contracted Provider according to the terms of, and subject to the requirements set forth in, the Agreement and this Compensation Schedule. Payment under this Compensation Schedule shall consist of the Allowed Amount as set forth herein less all applicable Cost-Sharing Amounts. All capitalized terms used in this Compensation Schedule shall have the meanings set forth in the Agreement, the applicable Product Attachment, or the Definitions section set forth at the end of this Compensation Schedule.

Normal Business Hours:

The maximum compensation for physician Covered Services rendered to a Covered Person during Normal Business Hours (hereinafter defined in the next paragraph, below) shall be the "Allowed Amount." Except as otherwise provided in this Compensation Schedule, the Allowed Amount for physician Covered Services during Normal Business Hours is the lesser of: (i) Allowable Charges; or (ii) 100% of the State Medicaid fee schedule in effect on the date of service.

After Hours All-Inclusive Encounter Rate:

"After Hours" means services will only apply to Covered Services rendered to Covered Person who are treated by Contracted Provider outside of the practice's Normal Business Hours. "Normal Business Hours" are defined as Monday through Friday from 8:00 am – 6:00 pm and Saturdays from 9:00 am – 12:00 pm.

In order to qualify for the "After Hours All-Inclusive Encounter Rate", Contracted Provider must bill the after-hours code 99050 along with the HCPCS codes relevant to the services provided. The After Hours All-Inclusive Encounter Rate is only applicable for sick visits and is inclusive of all services rendered during the visit with the exception of well visits and inoculations/vaccinations/immunizations.

The maximum compensation for physician Covered Services rendered to a Covered Person during After Hours shall be the "Allowed Amount." Except as otherwise provided in this Compensation Schedule, the Allowed Amount for physician Covered Services during After Hours is the lesser of: (i) Allowable Charges; or (ii) an After Hours All-Inclusive Encounter Rate of $25.00

Contracted Provider understands and agrees if Covered Person has received After Hours services by Contracted Provider and received Emergency Room Services on the same day, the After Hours All-Inclusive Encounter Rate will be recouped in accordance with Section 3.5 of the Agreement.

After Hours Well Visits and Inoculations/Vaccinations/Immunizations:

Well visits and inoculations/vaccinations/immunization Covered Services rendered during After Hours will be reimbursed in addition to the All-Inclusive Encounter Rate at the rate established above for Covered Services during Normal Business Hours. The All-Inclusive Encounter Rate will not be paid if the After Hours Covered Services are for a well visit only.

Default. If there is no established payment amount set forth above for a Covered Service provided to a Covered Person, the maximum compensation shall be 25.00% of Allowable Charges.

Additional Provisions:

1. Medicaid Fee Change. Payor utilizes the current Texas Medicaid Fee Change as published at: http://public.tmhp.com/FeeSchedules/Default.aspx for the provider's specialty.

2. Code Change Updates. Payor utilizes nationally recognized coding structures (including, without limitation, revenue codes, CPT codes, HCPCS codes, ICD codes, national drug codes, ASA relative values, etc., or their successors) for basic coding and descriptions of the services rendered. Updates to billing-related codes shall become effective on the date ("Code Change Effective Date") that is the later of: (i) the first day of the month following sixty (60) days after publication by the governmental agency having authority over the applicable Product of such governmental agency's acceptance of such code updates (ii) the effective date of such code updates as determined by such governmental agency or (iii) if a date is not established by such governmental agency or the applicable Product is not regulated by such governmental agency, the date that changes are made to nationally recognized codes. Such updates may include changes to service groupings. Claims processed prior to the Code Change Effective Date shall not be reprocessed to reflect any such code updates.

3. Fee Change Updates. Updates to the fee schedule shall become effective on the effective date of such fee schedule updates, as determined by the Payor ("Fee Change Effective Date"). The date of implementation of any fee schedule updates, i.e. the date on which such fee change is first used for reimbursement ("Fee Change Implementation Date"), shall be the later of: (i) the first date on which Payor is reasonably able to implement the update in the claims payment system; or (ii) the Fee Change Effective Date. Claims processed prior to the Fee Change Implementation Date shall not be reprocessed to reflect any updates to such fee schedule, even if service was provided after the Fee Change Effective Date.

4. Payment under this Compensation Schedule. All payments under this Compensation Schedule are subject to the terms and conditions set forth in the Agreement, the Provider Manual and any applicable billing manual.

Definitions:

1. **Allowed Amount** means the amount designated in this Compensation Schedule as the maximum amount payable to a Contracted Provider for any particular Covered Service provided to any particular Covered Person, pursuant to this Agreement or its Attachments.

2. **Allowable Charges** means a Contracted Provider's billed charges for services that qualify as Covered Services.

3. **Cost-Sharing Amounts** means any amounts payable by a Covered Person, such as copayments, cost-sharing, coinsurance, deductibles or other amounts that are the Covered Person's financial responsibility under the applicable Coverage Agreement, if applicable.

EXHIBIT 2
COMPENSATION SCHEDULE
CHILDREN'S HEALTH INSURANCE PROGRAM
PROFESSIONAL SERVICES

County of Tarrant dba Tarrant County Public Health

This compensation schedule ("Compensation Schedule") sets forth the maximum reimbursement amounts for medical and behavioral health Covered Services provided by Contracted Providers to Covered Persons enrolled in a Medicaid Product. Where the Contracted Provider's tax identification number ("TIN") has been designated by the Payor as subject to this Compensation Schedule, Payor shall pay or arrange for payment of a Clean Claim for Covered Services rendered by the Contracted Provider according to the terms of, and subject to the requirements set forth in, the Agreement and this Compensation Schedule. Payment under this Compensation Schedule shall consist of the Allowed Amount as set forth herein less all applicable Cost-Sharing Amounts. All capitalized terms used in this Compensation Schedule shall have the meanings set forth in the Agreement, the applicable Product Attachment, or the Definitions section set forth at the end of this Compensation Schedule.

Normal Business Hours:

The maximum compensation for physician Covered Services rendered to a Covered Person during Normal Business Hours (hereinafter defined in the next paragraph, below) shall be the "Allowed Amount." Except as otherwise provided in this Compensation Schedule, the Allowed Amount for physician Covered Services during Normal Business Hours is the lesser of: (i) Allowable Charges; or (ii) 100% of the State Medicaid fee schedule in effect on the date of service.

After Hours All-Inclusive Encounter Rate:

"After Hours" means services will only apply to Covered Services rendered to Covered Person who are treated by Contracted Provider outside of the practice's Normal Business Hours. "Normal Business Hours" are defined as Monday through Friday from 8:00 am – 6:00 pm and Saturdays from 9:00 am – 12:00 pm.

In order to qualify for the "After Hours All-Inclusive Encounter Rate", Contracted Provider must bill the after-hours code 99050 along with the HCPCS codes relevant to the services provided. The After Hours All-Inclusive Encounter Rate is only applicable for sick visits and is inclusive of all services rendered during the visit with the exception of well visits and inoculations/vaccinations/immunizations.

The maximum compensation for physician Covered Services rendered to a Covered Person during After Hours shall be the "Allowed Amount." Except as otherwise provided in this Compensation Schedule, the Allowed Amount for physician Covered Services during After Hours is the lesser of: (i) Allowable Charges; or (ii) an After Hours All-Inclusive Encounter Rate of $25.00.

Contracted Provider understands and agrees if Covered Person has received After Hours services by Contracted Provider and received Emergency Room Services on the same day, the After Hours All-Inclusive Encounter Rate will be recouped in accordance with Section 3.5 of the Agreement.

After Hours Well Visits and Inoculations/Vaccinations/Immunizations:

Well visits and inoculations/vaccinations/immunization Covered Services rendered during After Hours will be reimbursed in addition to the All-Inclusive Encounter Rate at the rate established above for Covered Services during Normal Business Hours. The All-Inclusive Encounter Rate will not be paid if the After Hours Covered Services are for a well visit only.

Default. If there is no established payment amount set forth above for a Covered Service provided to a Covered Person, the maximum compensation shall be 25% of Allowable Charges.

Additional Provisions:

1. Medicaid Fee Change. Payor utilizes the current Texas Medicaid Fee Change as published at: http://public.tmhp.com/FeeSchedules/Default.aspx for the provider's specialty.

2. Code Change Updates. Payor utilizes nationally recognized coding structures (including, without limitation, revenue codes, CPT codes, HCPCS codes, ICD codes, national drug codes, ASA relative values, etc., or their successors) for basic coding and descriptions of the services rendered. Updates to billing-related codes shall become effective on the date ("Code Change Effective Date") that is the later of: (i) the first day of the month following sixty (60) days after publication by the governmental agency having authority over the applicable Product of such governmental agency's acceptance of such code updates (ii) the effective date of such code updates as determined by such governmental agency or (iii) if a date is not established by such governmental agency or the applicable Product is not regulated by such governmental agency, the date that changes are made to nationally recognized codes. Such updates may include changes to service groupings. Claims processed prior to the Code Change Effective Date shall not be reprocessed to reflect any such code updates.

3. Fee Change Updates. Updates to the fee schedule shall become effective on the effective date of such fee schedule updates, as determined by the Payor ("Fee Change Effective Date"). The date of implementation of any fee schedule updates, i.e. the date on which such fee change is first used for reimbursement ("Fee Change Implementation Date"), shall be the later of: (i) the first date on which Payor is reasonably able to implement the update in the claims payment system; or (ii) the Fee Change Effective Date. Claims processed prior to the Fee Change Implementation Date shall not be reprocessed to reflect any updates to such fee schedule, even if service was provided after the Fee Change Effective Date.

4. Payment under this Compensation Schedule. All payments under this Compensation Schedule are subject to the terms and conditions set forth in the Agreement, the Provider Manual and any applicable billing manual.

Definitions:

1. **Allowed Amount** means the amount designated in this Compensation Schedule as the maximum amount payable to a Contracted Provider for any particular Covered Service provided to any particular Covered Person, pursuant to this Agreement or its Attachments.

2. **Allowable Charges** means a Contracted Provider's billed charges for services that qualify as Covered Services.

3. **Cost-Sharing Amounts** means any amounts payable by a Covered Person, such as copayments, cost-sharing, coinsurance, deductibles or other amounts that are the Covered Person's financial responsibility under the applicable Coverage Agreement, if applicable.

Attachment B: Medicare

MEDICARE PRODUCT ATTACHMENT
(INCLUDING REGULATORY REQUIREMENTS AND COMPENSATION)

THIS PRODUCT ATTACHMENT (this "***Product Attachment***") is made and entered between Superior HealthPlan, Inc. ("***Health Plan***") and County of Tarrant dba Tarrant County Public Health ("***Provider***").

WHEREAS, Health Plan and Provider entered into that certain participating provider agreement, including all Attachments, as the same may have been amended and supplemented from time to time (the "***Agreement***"), pursuant to which Provider and its Contracted Providers participate in certain Products offered by or available from or through a Company; and

WHEREAS, pursuant to the provisions of the Agreement, Contracted Providers will be designated and participate as "Participating Providers" in the Product described in this Attachment; and

WHEREAS, the Agreement is modified or supplemented as hereafter provided.

NOW THEREFORE, in consideration of the recitals, the mutual promises herein stated, the parties hereby agree to the provisions set forth below.

1. Defined Terms. All capitalized terms not specifically defined in this Attachment will have the meanings given to such terms in the Agreement.

2. Product Participation.

2.1. Medicare Product. This Attachment addresses the participation of Provider and the applicable Contracted Providers in the following Product: Medicare Product (which is sometimes referred to in this Attachment as "***Product***"). The term "***Medicare Product***" refers to those programs and health benefit arrangements offered by Health Plan, Payor or another Company in connection with one or more of the following Medicare product types that is administered, sponsored or regulated by the federal government (or any agency, department or division thereof) on its own or jointly with a State that administers or regulates such program or plan (each a "***Medicare Product Type***"): a non-Dual Eligible Special Needs Plan Medicare Advantage plan ("***MA Plan***"); a Medicare Advantage prescription drug plan ("***MA-PD Plan***"); a Dual Eligible Special Needs Plan ("***DSNP Plan***"); a Capitated Financial Alignment Demonstration ("***MMP Plan***") plan or program (e.g., a plan or program adopted or established under the Affordable Care Act of 2010, to test new service delivery and payment models for people dually eligible for Medicare and Medicaid, including any regulations or CMS pronouncements and any future Attachments); or other Medicare Product Types. The Medicare Product includes those Coverage Agreements entered into, issued or agreed to by a Payor under which a Company furnishes administrative services or other services in support of a Medicare Product. The Medicare Product does not apply to any Coverage Agreements that are specifically covered by another Product Attachment to the Agreement. This Attachment applies only to the provision of health care services, supplies or accommodations (including Covered Services) to Covered Persons enrolled in the Medicare Product. Provider acknowledges that it will participate in each Medicare Product Type for which a Compensation Schedule(s) is attached to this Medicare Product Attachment.

2.2. Participation. Except as otherwise specified in this Attachment, all Contracted Providers under the Agreement will participate in the Medicare Product as "Participating Providers," and will provide to Covered Persons enrolled in the Medicare Product, upon the same terms and conditions contained in the Agreement, as supplemented or modified by this Attachment, those Covered Services that are provided by Contracted Providers pursuant to the Agreement. In providing such services, Provider shall, and shall cause Contracted Providers to, comply with and abide by the provisions of this Attachment and the Agreement (including the Provider Manual). Provider acknowledges that all or certain of Health Plan's or Payor's duties with respect to the Medicare Product may be delegated to a Company or its delegate. Neither Health Plan, Company nor any Payor warrants or guarantees that

any Contracted Provider: (i) will participate in all or a minimum number of provider panels and/or Medicare Product Types, (ii) will be utilized by a minimum number of Covered Persons, or (iii) will indefinitely remain a Participating Provider or member of the provider panel for a particular network or Medicare Product Type.

2.3. Attachment. This Attachment constitutes the Product Attachment and Compensation Schedule(s) for the Medicare Product.

2.4. Construction. Except as expressly provided herein, the terms and conditions of the Agreement will remain unchanged and in full force and effect. In the event of a conflict between the provisions of the Agreement and the provisions of this Attachment, this Attachment will govern with respect to health care services, supplies or accommodations (including Covered Services) rendered to Covered Persons enrolled in the Medicare Product. To the extent Provider or any Contracted Provider is unclear about its, his or her respective duties and obligations, Provider or the applicable Contracted Provider shall request clarification from the Company.

3. Term. This Attachment will be coterminous with the Agreement unless a party or a Contracted Provider terminates the participation of the Contracted Provider in the Medicare Product in accordance with the applicable provisions of the Agreement or this Attachment.

4. CMS and State-Mandated Regulatory Requirements. The schedule(s) following this Attachment, which are incorporated by reference, set forth special provisions under a Governmental Contract and/or as required by State law with respect to the Medicare Product, including, as applicable, MMP Plan contract provider requirements.

5. Compensation Schedule. This section sets forth or describes the Compensation Schedule(s) applicable to the various Medicare Product Types. Except as modified or supplemented by this Attachment, the compensation hereunder for the provision of Covered Services by Contracted Providers to Covered Persons enrolled in the Medicare Product is subject to all of the other provisions in the Agreement (including the Provider Manual) that affect or relate to compensation for Covered Services provided to Covered Persons.

6. Other Terms and Conditions. Citations provided herein are for convenience only and shall not affect the meaning or interpretation of the terms of this Attachment. Such citations may become outdated as the Governmental Contract and/or State law, with respect to the Medicare Product, is amended from time to time.

Attachment B: Medicare

SCHEDULE A
CMS REGULATORY REQUIREMENTS

This schedule sets forth required provisions that are applicable to all Medicare Product Types under this Medicare Product Attachment.

1. DEFINITIONS. The following terms shall be defined as set forth below as used in this Medicare Product Attachment. Capitalized terms not otherwise defined in this schedule shall be defined as set forth in the Agreement or elsewhere in the Medicare Product Attachment.

1.1. ***Capitated Financial Alignment Demonstration Program*** means the program, created by Congress in the Affordable Care Act of 2010, to test new service delivery and payment models for people dually eligible for Medicare and Medicaid, including any regulations or CMS pronouncements and any future Attachments.

1.2. ***Clean Claim*** means a claim that has no defect, impropriety, lack of any required substantiating documentation – including the substantiating documentation needed to meet the requirements for encounter data – or particular circumstance requiring special treatment that prevents timely payment; and a claim that otherwise conforms to the Clean Claim requirements under original Medicare.

1.3. ***CMS*** means Centers for Medicare and Medicaid Services.

1.4. ***CMS Contract*** means the contract between Health Plan or a Payor and CMS, or among Health Plan or a Payor, CMS and the State, that governs the terms of Health Plan's or Payor's participation in a Medicare Plan.

1.5. ***Completion of Audit*** means completion of audit by HHS, the Government Accountability Office, or their designees of a Medicare Advantage Organization, First Tier, Downstream or Related Entity.

1.6. ***Covered Persons*** means those individuals who are enrolled in a Medicare Plan.

1.7. ***Covered Services*** means those services which are covered under a Medicare Plan.

1.8. ***Downstream Entity*** means any party that enters into a written arrangement, acceptable to CMS, with persons or entities involved with the Medicare Advantage benefit, below the level of the arrangement between Health Plan or Payor and a First Tier Entity. These written arrangements continue down to the level of the ultimate provider of both health and administrative services.

1.9. ***First Tier Entity*** means any party that enters into a written arrangement, acceptable to CMS, with Health Plan or Payor to provide administrative services or health care services for a Medicare eligible individual under a Medicare Plan.

1.10. ***HHS*** means the United States Department of Health and Human Services.

1.11. ***Medicare Advantage Program*** means the program created by Congress in the Medicare Modernization Act of 2003 to replace the Medicare+Choice Program established under Part C of Title XVIII of the Social Security Act, including any regulations or CMS pronouncements and any future Attachments.

1.12. ***Preclusion List*** means the CMS-compiled list of individuals and entities that -

a. Meet all of the following requirements: (i) the individual or entity is currently revoked from Medicare under 42 § 424.535; (ii) the individual or entity is currently under a reenrollment bar under 42 § 424.535(c); and (iii) CMS determines that the underlying conduct that led to the revocation is detrimental to the best interests of

the Medicare program. In making this determination under (iii), CMS considers the following factors: (A) the seriousness of the conduct underlying the individual's or entity's revocation; (B) the degree to which the individual's or entity's conduct could affect the integrity of the Medicare program; and (C) any other evidence that CMS deems relevant to its determination; or

b. Meet both of the following requirements: (i) the individual or entity has engaged in behavior for which CMS could have revoked the individual or entity to the extent applicable had they been enrolled in Medicare and (ii) CMS determines that the underlying conduct that would have led to the revocation is detrimental to the best interests of the Medicare program. In making this determination under (ii), CMS considers the following factors: (A) the seriousness of the conduct involved; (B) the degree to which the individual's or entity's conduct could affect the integrity of the Medicare program; and (C) any other evidence that CMS deems relevant to its determination. *42 C.F.R. § 422.2*

1.13. ***Related Entity*** means any entity that is related to Health Plan or Payor by common ownership or control and (1) performs some of Health Plan's or Payor's management functions under contract or delegation; (2) furnishes services to Covered Persons under an oral or written agreement; or (3) leases real property or sells materials to Health Plan or Payor at a cost of more than $2,500 during a contract period.

1.14. ***State*** means one or more applicable state governmental agencies of the State of Texas, unless otherwise defined in an Attachment for the purposes of that Attachment.

2. COVERED SERVICES. Provider shall furnish Covered Services to Covered Persons as set forth in the Agreement and this Medicare Product Attachment.

3. SUBCONTRACTOR OBLIGATIONS. To the extent that Provider engages any other person (excluding an employee) or entity to perform services in connection with a Medicare Product, including any Downstream Entity, Provider agrees that such engagement shall be set forth in a written agreement that requires such other person or entity to assume the same obligations that Provider assumes under this Medicare Product Attachment.

4. GOVERNMENT RIGHT TO INSPECT.

4.1. Provider agrees that HHS, the Comptroller General or their designees have the right to audit evaluate, collect and inspect any books, contracts, computer or other electronic systems, including medical records and documentation of Provider relating to the CMS Contract through 10 years from the termination date of this Medicare Product Attachment or from the date of Completion of Audit, whichever is later. *42 C.F.R. § 422.504 (i)(2)(i) and (ii)*

4.2. Provider agrees that HHS, the Comptroller General, or their designees have the right to audit, evaluate, collect, and inspect any records under Section 4.1 of this Medicare Product Attachment directly from Provider or any Downstream Entity. For records subject to review under this Section 4.2, except in exceptional circumstances, CMS will provide notification to Health Plan or Payor that a direct request for information has been initiated. *42 C.F.R. §§ 422.504(i)(2)(ii) and (iii)*

5. CONFIDENTIALITY AND ENROLLEE RECORD REQUIREMENTS. Provider shall comply with all confidentiality and Covered Person record accuracy requirements, including: (1) abiding by all federal and State laws regarding the confidentiality and disclosure of medical records or other health and enrollment information; (2) ensuring that medical information is released only in accordance with applicable federal or State law, or pursuant to court orders or subpoena; (3) maintaining the records and information in an accurate and timely manner; and (4) ensuring timely access by Covered Persons to the records and information that pertains to them. *42 C.F.R. §422.504(a)(13) and 422.118*

6. HOLD HARMLESS.

6.1. Provider hereby agrees that Covered Persons shall not be held liable for payment of any fees that are the legal obligation of Payor. *42 C.F.R. §§422.504(i)(3)(i) and 422.504(g)(1)(i)*

6.2. With respect to MA Plans and MA-PD Plans, Provider hereby acknowledges and agrees that for Covered Persons eligible for both Medicare and Medicaid, such Covered Persons shall not be held liable for Medicare Part A and Part B cost-sharing when the State is responsible for paying such amounts. With respect to Medicare-Medicaid Plans, Provider hereby acknowledges and agrees that Covered Persons eligible for both Medicare and Medicaid shall not be held liable for Medicare Part A and Part B cost-sharing; in addition, Medicare Parts A and B services must be provided at zero cost-sharing as part of the integrated package of benefits. *42 C.F.R. §§422.504(g)(1)(iii); March 29, 2012 CMS Issued Guidance*

With respect to all Medicare Plans, Provider will be informed of Medicare and Medicaid benefits and rules for Covered Persons eligible for Medicare and Medicaid. If Provider contracts with Contracted Providers to provide Covered Services to Covered Persons, Provider will inform Contracted Providers of Medicare and Medicaid benefits and rules for Covered Persons eligible for Medicare and Medicaid. Provider may not impose, and must prohibit any Downstream Entities from imposing, cost-sharing that exceeds the amount of cost-sharing that would be permitted with respect to the Covered Person under title XIX if such Covered Person were not enrolled with Health Plan or Payor. Provider shall accept payment from Payor as payment in full, or bill the appropriate State source. *42 C.F.R. §§422.504(i)(3)(i) and 422.504(g)(1)(iii)*

7. COMPLIANCE WITH CMS CONTRACT. Provider shall perform its obligations under this Medicare Product Attachment in a manner consistent with and in compliance with Health Plan's and Payor's contractual obligations under the CMS Contract. *42 C.F.R. §422.504(i)(3)(iii)*

8. PROMPT PAYMENT. Payor shall pay, or arrange to pay, Provider for Covered Services rendered to Covered Persons in accordance with the Compensation Schedule(s) to this Medicare Product Attachment. Any Clean Claim shall be paid within 30 days (or such other time frame as determined by Health Plan) of receipt by Health Plan or Payor, or if Provider contracts with Downstream Entities, by Provider or such Downstream Entity, as applicable. *42 C.F.R. §422.520(b)(1) and (2)*

9. EFFECT OF PRECLUSION LIST. Provider acknowledges and agrees that Payor may not pay, directly or indirectly, on any basis, for items or services furnished to a Covered Person by any individual or entity that is excluded by the HHS Office of the Inspector General or is included on the Preclusion List. Provider acknowledges and agrees that, after the expiration of the 60-day period specified in 42 C.F.R. § 422.222: (i) Provider will no longer be eligible for payment from Payor and will be prohibited from pursuing payment from the Covered Person as stipulated by the terms of the contract between CMS and the Payor per 42 C.F.R. § 422.504(g)(1)(iv) and (ii) Provider will hold financial liability for services, items, and drugs that are furnished, ordered, or prescribed after this 60-day period, at which point Provider will have already received notification of the preclusion. *42 C.F.R. § 422.224; 422.504(g)(1)(v)*

10. COMPLIANCE WITH FEDERAL AND STATE LAWS. Provider and any Downstream Entity shall comply with all applicable laws including Medicare laws, regulations and CMS and State instructions. *42 C.F.R. §422.504(i)(4)(v)*

11. DELEGATION OF DUTIES. In the event that Health Plan or Payor delegates to Provider any function or responsibility imposed pursuant to the CMS Contract, such delegation shall be subject to the applicable requirements set forth in 42 C.F.R. §§ 422.504(i)(4) and 423.505(i), as they may be amended over time. Any delegation by Provider of functions or responsibilities imposed pursuant to this Medicare Product Attachment shall be subject to the prior written approval of Health Plan or Payor and shall also be subject to the requirements set forth in 42 C.F.R. §§ 422.504(i)(4) and (5) and 423.505(i), as they may be amended over time.

11.1. Provider's delegated activities and reporting responsibilities, if any, are specified in the Agreement or applicable attachment to the Agreement (e.g., Delegated Credentialing Agreement, Delegated Services Agreement, Statement of Work, or other scope of services attachment). If such attachment is not executed, no administrative functions shall be deemed as delegated.

11.2. CMS, Health Plan and Payor reserve the right to revoke the delegation activities and reporting requirements or to specify other remedies in instances where CMS, Health Plan or Payor determine that such parties have not performed satisfactorily.

11.3. Provider agrees that Health Plan or Payor will monitor the performance of the parties on an ongoing basis.

11.4. When applicable, as specified in an attached Delegated Credentialing Agreement or Delegated Services Agreement to the Agreement, the credentials of medical professionals affiliated with Provider will be either reviewed by Health Plan or Payor, or the credentialing process will be reviewed and approved by Health Plan or Payor, and Health Plan or Payor must audit the credentialing process on an ongoing basis.

11.5. If Health Plan or Payor delegates the selection of providers, contractors, or subcontractors, Health Plan or Payor retains the right to approve, suspend, or terminate any such arrangement. *42 C.F.R. §§ 422.504(i)(4) and (5)*

12. NON-DISCRIMINATION BASED ON HEALTH OR OTHER STATUS. Provider shall not deny, limit, or condition coverage or the furnishing of health care services or benefits to Covered Persons based on any factor related to health status, including, but not limited to, medical condition (including mental as well as physical illness), claims experience, receipt of health care, medical history, genetic information, evidence of insurability (including conditions arising out of acts of domestic violence), race, ethnicity, national origin, religion, sex, age, sexual orientation, source of payment and mental or physical disability. *42 C.F.R. §422.110(a)*

13. SERVICE AVAILABILITY. Provider shall ensure that its hours of operation are convenient to Covered Persons and do not discriminate against Covered Persons; and that Covered Services are available 24 hours a day, 7 days a week, when medically necessary. *42 C.F.R. §422.112(a)(7).*

14. CULTURAL COMPETENCE. Provider must provide all services in a culturally competent manner to all Covered Persons, including those with limited English proficiency or reading skills, and diverse cultural and ethnic backgrounds. *42 C.F.R. §422.112(a)(8).*

15. FOLLOW-UP CARE. Provider shall ensure that Covered Persons are informed of specific health care needs that require follow-up and receive, as appropriate, training in self-care and other measures they may take to promote their own health. *42 C.F.R. §422.112(b)(5).*

16. ADVANCE DIRECTIVES. Provider shall comply with Health Plan's and Payor's policies and procedures concerning advance directives. *42 C.F.R. §422.128(b)(1)(ii)(E).*

17. PROFESSIONALLY RECOGNIZED STANDARDS OF CARE. Provider agrees to provide Covered Services under the Agreement to Medicare beneficiaries in a manner consistent with professionally recognized standards of health care. *42 C.F.R. §422.504(a)(3)(iii).*

18. CONTINUATION OF BENEFITS. Provider shall provide Covered Services as provided in the Agreement and this Medicare Product Attachment: (a) for all Covered Persons, for the duration of the contract period for which CMS payments have been made and (b) for Covered Persons who are hospitalized on the date the CMS Contract terminates, or, in the event of an insolvency, through discharge. This continuation of benefits provision shall survive termination of this Medicare Product Attachment. *42 C.F.R. §§422.504(g)(2)(i); 422.504(g)(2)(ii); 422.504(g)(3)*

19. PHYSICIAN INCENTIVE ARRANGEMENTS. Provider agrees that, if Health Plan or Payor has a physician incentive plan that places Provider at substantial financial risk (as determined under 42 C.F.R § 422.208(d)) for services that Provider does not furnish itself, Provider shall obtain and maintain either aggregate or per-patient stop-loss protection in accordance with the requirements at 42 C.F.R. § 422.208(f). *42 C.F.R. §422.208.*

20. INFORMATION DISCLOSURES TO CMS. Provider shall cooperate with Health Plan and Payor in providing any information to CMS deemed necessary by CMS for the administration or evaluation of the Medicare program. *42 C.F.R. §422.504(f)(2).*

21. RISK ADJUSTMENT DATA. Provider shall provide to Health Plan or Payor risk adjustment data as required by CMS. *42 C.F.R. §§ 422.310(d)(3), (4).* Upon Health Plan's, Payor's or CMS's request, Provider shall submit a sample of medical records for the validation of risk adjustment data, as required by CMS. Provider acknowledges that penalties may apply for submission of false data. Provider certifies based on best knowledge, information and belief that the data it submits under 42 C.F.R. § 422.310 are accurate, complete and truthful. *42 C.F.R. §§ 422.310(e) and 422.504(l)(3).*

22. COMPLIANCE WITH HEALTH PLAN AND PAYOR'S POLICIES AND PROCEDURES. Provider shall comply with Health Plan's and Payor's policies and procedures. In addition, if Provider is a physician or physician group, Provider shall, or shall require the physician members of the group to, upon Health Plan's or Payor's request, consult with Health Plan or Payor regarding Health Plan's or Payor's medical policy, quality improvement programs and medical management procedures and ensure that the following standards are met: (a) practice guidelines and utilization management guidelines: (i) are based on reasonable medical evidence or a consensus of health care professionals in the particular field; (ii) consider the needs of the enrolled population; (iii) are developed in consultation with contracting physicians; and (iv) are reviewed and updated periodically; (b) the guidelines are communicated to providers and, as appropriate, to Covered Persons; and (c) decisions with respect to utilization management, Covered Person education, coverage of services, and other areas in which the guidelines apply are consistent with the guidelines. *42 C.F.R. §422.202(b).* Provider shall comply with Health Plan's or Payor's quality assurance and performance improvement programs. *42 C.F.R.§422.504(a)(5).*

23. WRITTEN NOTICE FOR REASON FOR SUSPENSION AND TERMINATION. In the event Health Plan suspends or terminates this Medicare Product Attachment with respect to Provider or any physicians employed or contracted with Provider, this provision constitutes written notice from Health Plan to Provider or such physician of the affected physician's right to appeal the action pursuant to the process and timing for requesting a hearing set forth in the Provider Manual or otherwise designated in writing by Health Plan. *42 C.F.R. §422.202(d)(1)*

24. NOTICE OF WITHOUT CAUSE TERMINATION. Provider must provide a minimum of 60 days written notice, or such longer period specified in this Agreement, before terminating this Medicare Product Attachment without cause. *42 C.F.R. §422.202(d)(4).*

25. COMPLIANCE WITH FEDERAL LAWS AND REGULATIONS. Provider agrees to comply with (a) federal laws and regulations designed to prevent or ameliorate fraud, waste, and abuse, including, but not limited to, applicable provisions of federal criminal law, the False Claims Act (31 U.S.C. 3729 et. seq.), and the anti-kickback statute (section 1128B(b)) of the Act); and (b) HIPAA administrative simplification rules at 45 CFR parts 160, 162, and 164. *42 C.F.R. §422.504(h)(1).*

26. FEDERAL FUNDS. Provider acknowledges that payments Provider receives from Health Plan or Payor to pursuant to this Medicare Product Attachment are, in whole or part, from federal funds. Therefore, Provider and any of its Downstream Entities are subject to certain laws that are applicable to individuals and entities receiving federal funds, which may include but is not limited to, Title VI of the Civil Rights Act of 1964 as implemented by 45 C.F.R. Part 84; the Age Discrimination Act of 1975 as implemented by 45 C.F.R. Part 91; the Americans with Disabilities Act; the Rehabilitation Act of 1973 and any other regulations applicable to recipients of federal funds. *Medicare Managed Care Manual, Ch. 11 § 120.*

27. EXCLUDED PERSONS/PROGRAM INTEGRITY. Provider warrants to Health Plan and each Payor that it is not excluded and shall not employ or contract for the provision of health care, utilization review, medical social work, or any administrative services pursuant to this Agreement with any individual or entity (hereafter, "person") whom Provider knows or reasonably should have known is excluded from participation in the Medicare and Medicaid program under Section 1128 or 1128A of the Social Security Act. Provider hereby certifies that no such excluded person currently is employed by or under contract with Provider. Provider shall review the Office of Inspector List of Excluded Individuals and Entities and the System for Award Management exclusion list and verify on a monthly basis or as often as required by CMS guidelines, that the persons it employs or contracts for the provision of such services pursuant to this Agreement are in good standing. Provider shall promptly disclose to Health Plan and Payor any exclusion, or other event that makes a Provider employee or Downstream or Related Entity ineligible to perform work related to Medicare or Medicaid. *42 C.F.R. § 422.752(a)(8).* Provider shall promptly notify Health Plan and Payor in writing in the event that Provider is criminally convicted or has a civil judgment entered against Provider for fraudulent activities or is sanctioned under any federal program involving the provision of health care or prescription drug services. Provider agrees to be bound by the provisions set forth at 2 C.F.R. Part 376.

28. COMPLIANCE WITH GRIEVANCE AND APPEALS REQUIREMENTS. Provider shall cooperate and comply with all applicable State, federal, Health Plan and Payor requirements regarding Covered Persons grievances and appeals, as well as enrollment and disenrollment determinations, including the obligation to provide information (including medical records and other pertinent information) to Health Plan and Payor within the time frame required by regulation or, if not so required, reasonably requested for such purpose.

29. OFFSHORE SUBCONTRACTORS. In addition to the applicable requirements of Section 11 of this Medicare Product Attachment, Provider shall disclose to Health Plan or Payor in writing, 30 days prior to signing an offshore contract, all offshore contractor information and an attestation for each such offshore contractor, in a format required or permitted by CMS. *CMS Health Plan Management System Memos 7/23/2007, 9/20/2007, and 8/26/2008.*

30. SCOPE AND CONFLICTS. Nothing in this Medicare Product Attachment shall be held to vary, alter, waive or extend any of the terms, conditions, agreements or limitations of the Agreement, including the Provider Manual, except as stated in this Medicare Product Attachment. In the event of any conflict between this Medicare Product Attachment and any provision of the Agreement, the provisions of this Medicare Product Attachment shall govern. In the event that any provision of this Medicare Product Attachment conflicts with the provisions of any statute or regulation applicable to Health Plan or Payor, the provisions of the statute or regulation shall have full force and effect unless such statute or regulation is preempted by federal law.

31. TERMINATION. This Medicare Product Attachment shall terminate upon the termination of the Agreement and under the same terms and conditions specified in the Agreement. This Medicare Product Attachment may be further terminated by Health Plan immediately upon written notice to Provider if a CMS Contract is terminated, or if Provider is on the General Services Administration (GSA) list or the System for Award Management (SAM) as excluded or is otherwise suspended or excluded from participation in Medicare or Medicaid or is listed on the Preclusion List.

SCHEDULE B
MMP CONTRACT PROVIDER REQUIREMENTS
TEXAS

This schedule sets forth required provisions that are applicable to MMP Plans under this Medicare Product Attachment.

1. DEFINITIONS. The following terms, and any terms defined in the Agreement, shall have the specified meanings when capitalized in this schedule. Capitalized terms not otherwise defined in this schedule shall be defined as set forth in the Agreement.

1.1. "***Cost Sharing***" means co-payments paid by Covered Person in order to receive Medicare Part D health care services.

1.2. "***Covered Person***" means any person covered by Health Plan under the capitated financial alignment demonstration program.

1.3. "***Cultural Competence***" means the ability of individuals and systems to provide services effectively to people of various cultures, races, ethnic backgrounds and religions in a manner that recognizes, values, affirms and respects the worth of the individuals and protects and preserves their dignity.

1.4. "***DADS***" means the Texas Department of Aging and Disability Services and any successor agency.

1.5. "***Department***" or "***HHSC***" means the Texas Health and Human Services Commission.

1.6. "***Emergency Medical Condition***" means a medical condition manifesting itself by acute symptoms of recent onset and sufficient severity (including, but not limited to, severe pain, psychiatric disturbances and/or symptoms of substance abuse) that a prudent layperson, who possesses an average knowledge of health and medicine, could reasonably expect the absence of immediate medical attention to result in placing the health of the individual (or with respect to a pregnant woman, the health of the woman or her unborn child) in serious jeopardy, serious impairment to body functions or serious dysfunction of any bodily organ or part; or with respect to a pregnant woman who is having contractions, (1) that there is inadequate time to effect a safe transfer to another hospital before delivery or (2) that transfer may pose a threat to the health or safety of the woman or the unborn child.

1.7. "***Flexible Benefits***" or "***Value Added Services***" means additional services for coverage beyond Covered Services, which may be actual health care services, benefits or positive incentives that HHSC and CMS determine will promote healthy lifestyles and improve health outcomes among Covered Persons. These benefits may be actual health care services and long term services and supports (LTSS) or positive incentives that promote healthy lifestyles and improved health outcomes among Covered Persons, including weight loss, smoking cessation or other programs approved by HHSC and CMS. Temporary phones, cell phones, additional transportation benefits, and extra home health services may be Flexible Benefits if approved by HHSC and CMS. Best practice approaches to delivering Covered Services are not considered Flexible Benefits. Flexible Benefits provided by Health Plan are for purposes of attracting or keeping Covered Persons or to promote health in a manner that may save other health-related expenses, or for other purposes as may be determined by Health Plan.

1.8. "***Medically Necessary Services***" means services must be provided in a way that provides all protections to covered individuals provided by Medicare and Texas Medicaid. (per Medicare) Services must be reasonable and necessary for the diagnosis or treatment of illness or injury or to improve the functioning of a malformed body member or otherwise medically necessary under 42 U.S.C. §1395; (per HHSC) this also has the meaning assigned in Texas Administrative Code (T.A.C.) Section 353.2.

1.9. "***Primary Care Provider***" or "***PCP***" means a provider who has agreed with Health Plan to provide a medical home to Covered Persons and who is responsible for providing initial and primary care to Covered Persons, maintaining the continuity of care and initiating referral for services.

1.10. "***Provider***" means an appropriately credentialed and licensed individual, facility, agency, institution, organization or other entity, and its employees and First Tier, Downstream, or Related Entities, that has a provider contract with Health Plan for the delivery of Covered Services to Covered Persons.

1.11. "***Provider Preventable Condition***" means a hospital acquired condition or a condition occurring in any health care setting that has been found by the Department, based upon a review of medical literature by qualified professionals, to be reasonably preventable through the application of procedures supported by evidence-based guidelines, has a negative consequence for the Covered Person and is auditable.

1.12. "***Service Coordination Team***" means a team led by a service coordinator and ensures the integration of the Covered persons' medical, behavioral health, substance use, LTSS and social needs. The Service Coordination Team coordinates all Covered Services and any applicable non-capitated services. The Service Coordination Team is person-centered, built on the Covered Person's specific preference and needs, and delivers services with transparency, individualization, respect, linguistic and cultural competence, and dignity.

2. STATE AND FEDERAL COMPLIANCE. Provider shall comply with applicable State and federal licensing and certification requirements, rules and/or regulations related to the MMP Plan. Provider shall also provide Health Plan with all required disclosures including, but not limited to, disclosures required by 42 C.F.R. 455 Subpart B and 42 CFR §1002.3.

3. ACCESS TO MEDICAL RECORDS. Provider will allow Health Plan access to Covered Persons' medical records for purposes related to Health Plan's performance of its duties under the MMP Plan contract including, but not limited to, quality assurance purposes, identifying third party insurance carriers, and to provide CMS, HHSC and/or DADS access to medical records upon request.

4. CULTURAL COMPETENCY. Provider will provide services in a manner that demonstrates Cultural Competence, including being responsive to the linguistic, cultural, ethnic, racial, religious, age, gender and other unique needs of any minority, homeless population, Covered Persons with disabilities (both congenital and acquired disabilities) or other special population served by Health Plan. This responsiveness includes the capacity to communicate with Covered Persons in languages other than English, when necessary, as well as those with a vision or hearing impairment.

5. PAYMENT RESTRICTIONS. Provider shall comply with all payment restrictions under the MMP Plan, including balance billing restrictions, and shall not charge Covered Persons for any cost sharing for Flexible Benefits.

6. PROVIDER PREVENTABLE CONDITIONS. Health Plan shall not pay Provider for a Provider Preventable Condition, as defined in 42 C.F.R. §447.26(b). As a condition of payment from Health Plan, Provider shall comply with reporting requirements on Provider Preventable Conditions as described at 42 C.F.R. §447.26(d) and as may be specified by Health Plan and/or the Department.

7. PROVIDER ENROLLMENT. Providers that provide Covered Services that are covered under the Medicare program must be enrolled as Medicare providers in order to submit claims for reimbursement or otherwise participate in the Medicare program. All Providers that provide Covered Services that are covered under the Medicaid program must be enrolled in the State Medicaid program if such enrollment is required by the Department's rules or policy in order to submit claims for reimbursement or otherwise participate in the State Medicaid program.

8. ADA COMPLIANCE. Provider locations where Covered Persons receive services shall be accessible to Covered Persons and compliant with the Americans with Disabilities Act ("ADA"). Provider shall comply with the ADA (28 C.F.R. 35.130) and §504 of the Rehabilitation Act of 1973 (29 U.S.C. § 794) and maintain capacity to

deliver services in a manner that accommodates the needs of Covered Persons including, but not limited to, providing flexibility in scheduling to accommodate the needs of the Covered Persons, providing interpreters or translators for Covered Persons who are deaf or hard of hearing or do not speak English, or ensuring that Covered Persons with disabilities are provided reasonable accommodations to ensure effective communication, including auxiliary aids or services. Provider shall provide Health Plan with sufficient information to enable Health Plan to ensure Provider's compliance with the ADA, including on-site visits by Health Plan staff.

9. TIMELY PROVISION OF CARE. Covered Persons must be offered appointments at no less frequent than appointments offered to individuals not in the MMP Plan and within the following timeframes, as applicable:

9.1. Emergency Services must be provided upon Covered Person presentation at the service delivery site and at out-of-area facilities;

9.2. Urgent care, including urgent specialty care, must be provided within 24 hours;

9.3. Routine primary care must be provided within 14 days;

9.4. Initial outpatient behavioral health visits must be provided within 14 days;

9.5. PCPs must make referrals for specialty care on a timely basis, based on the urgency of the Covered Person's medical condition, but no later than 30 days;

9.6. Pre-natal care must be provided within 14 days, except for high-risk pregnancies or new Covered Persons in the third trimester, for whom an appointment must be offered within five days, or immediately, if an emergency exists; and

9.7. Preventive health services for adults must be offered within 90 days.

10. PROVISIONS RELATED TO ALL PROVIDERS.

10.1. Provider shall comply with the requirements of Texas Government Code §531.024161, regarding reimbursement of claims based on orders or referrals by supervising Providers.

10.2. Provider agrees to ensure that any employee of Provider that processes Medicaid claims in Texas on Provider's behalf attends annual training as required by Texas Government Code § 531.105.

10.3. If Provider performs functional assessments on Covered Persons, Provider agrees to ensure that any data recorded on a functional assessment instrument is sent to Health Plan as soon as the functional assessment is completed.

10.4. If Provider provides primary home care, personal assistance services, in-home or out-of-home respite services, nursing services, physical therapy, occupational therapy and/or speech and language therapy services, Provider must meet State licensure/certification requirements.

10.5. Provider must be enrolled in the State Medicaid program, not be sanctioned by the Medicaid or Medicare programs and have a valid National Provider Identifier or atypical provider identifier.

10.6. If Provider is a personal assistance service provider, then Provider must be licensed by DADS as a home and community support services agency.

10.7. If Provider is an adult day care provider, then Provider must be licensed by the DADS Regulatory Division as an adult day care provider.

11. PROVISIONS RELATED TO PRIMARY CARE PROVIDERS. If Provider is a PCP, Provider shall be:

11.1. Licensed by the State;

11.2. Be able to conduct outreach to Covered Persons under Provider's care when Health Plan informs Provider that a Covered Person has not completed a Level I assessment;

11.3. Be willing to work with Health Plan's Service Coordination Team; and

11.4. Be in good standing with the Medicare and Medicaid programs.

12. HOSPITAL-SPECIFIC REQUIREMENTS. If Provider is a hospital, Provider shall comply with the following requirements, as applicable:

12.1. Access to Care. Provider shall ensure Covered Services are available and accessible 24 hours per day, 7 days per week.

12.2. PCP Notification of Screening and Treatment. Provider shall notify Covered Person's PCP of a Covered Person's screening and treatment in the emergency department.

12.3. EMTALA Compliance. Provider shall comply with the Emergency Medical Treatment and Labor Act (EMTALA), which requires Provider to comply with the following requirements, among others:

12.3.1. Provider's qualified medical personnel must provide appropriate medical screening examinations to any individual who "comes to the emergency department," as defined in 42 C.F.R.§ 489.24(b);

12.3.2. Provider shall provide individuals with stabilizing treatment or, if Provider lacks the capability or capacity to provide stabilizing treatment, appropriately transfer such individuals; and

12.3.3. Provider shall notify Covered Person's PCP of Covered Person's screening and treatment.

12.4. Information Upon Discharge. Provider shall ensure that when a Covered Person is being discharged from an inpatient admission, Covered Person receives a written notice of explanation called an "Important Message From Medicare About Your Rights" regarding the right to appeal the discharge decision.

13. BEHAVIORAL HEALTH – SPECIFIC REQUIREMENTS. If Provider provides behavioral health services, Provider shall make available to Health Plan all behavioral health clinical assessment and outcomes data for quality management and network management purposes.

14. DISCLOSURE OF SIGNIFICANT BUSINESS TRANSACTIONS. In order to allow Health Plan to comply with applicable regulatory requirements, Provider agrees to furnish to Health Plan, upon request and within 35 calendar days of the date of the request, full and complete information about the ownership of any (a) subcontractor; and (b) wholly owned supplier, with whom Provider has had business transactions totaling more than $25,000 during the five year period (or lesser period specified by Health Plan) ending on the date of the request.

15. QUALITY ASSESSMENT AND PERFORMANCE IMPROVEMENT. Provider shall cooperate with Health Plan's Quality Assessment and Performance Improvement program.

SCHEDULE C
STATE-MANDATED REGULATORY REQUIREMENTS
TEXAS

This schedule sets forth the provisions that are required by State or federal law to be included in the Agreement with respect to all Medicare Product Types under this Medicare Product Attachment. Any additional Regulatory Requirements that may apply to the Coverage Agreements or Covered Persons enrolled in or covered by this Product may be set forth in the Provider Manual or another Attachment. To the extent that a Coverage Agreement, or a Covered Person, is subject to the law cited in the parenthetical at the end of a provision on this schedule, such provision will apply to the rendering of Covered Services to a Covered Person with such Coverage Agreement, or to such Covered Person, as applicable.

TX-1 Batched Claims. No Payor or delegate or clearinghouse of a Payor or delegate may refuse to process or pay an electronically submitted clean claim, as that term is defined in Tex. Ins. Code Ann. § 843.336, as may be amended, because the claim is submitted together with or in a batch submission with a claim that is not a clean claim. (TEX. INS. CODE ANN. §§ 843.323)

TX-2 Podiatrists. If a Participating Provider is a podiatrist licensed by the Texas State Board of Podiatric Medical Examiners, the provisions set forth in this section apply. The Participating Provider may request, and the Payor shall provide not later than the 30th day after the date of the request, a copy of the coding guidelines and payment schedules applicable to the compensation that the Participating Provider receives or will receive under this schedule. The Payor may not unilaterally make material retroactive revisions to the coding guidelines and payment schedules. The Participating Provider may, while practicing within the scope of the law regulating podiatry, provide x-rays and nonprefabricated orthotics covered by the Coverage Agreement. (TEX. INS. CODE ANN. §§ 843.311)

TX-3 Claim Submission; Prompt Payment.

TX-3.1 As required by applicable State law, Provider and each Participating Provider shall submit a claim no later than the 95th day after the date of service. A claim not submitted within such time frame may be denied for payment, unless the failure to submit the claim in compliance with this section is a result of a catastrophic event that substantially interferes with the normal business operations of Provider or the Participating Provider. Neither Provider nor a Participating Provider (or any delegate) shall submit a duplicate claim for payment before the 46th day after the date the original claim was submitted. (TEX. INS. CODE ANN. §§ 843.337)

TX-3.2 Except as otherwise provided in applicable State law, Payor shall determine whether a clean claim submitted by Provider or a Participating Provider for Covered Services is payable not later than the 45th day after the date on which a clean claim in a nonelectronic format is received, or not later than the 30th day after the date on which a clean claim in an electronic format is received. Except as otherwise provided in applicable State law, Payor shall pay clean claims submitted by Provider or a Participating Provider for Covered Services on or before the later of (i) the 45th day after the date on which the claim for payment is received with the documentation reasonably necessary to process the claim or (ii) the last day in the time period specified in the Agreement or the Provider Manual for payment of claims. (TEX. INS. CODE ANN. §§ 843.336-843.354)

TX-4 Waiver of Electronic Claims. When expressly required by applicable State law, a waiver of any requirement under the Agreement or this Product Attachment for the electronic submission of a claim made with respect to a Coverage Agreement may be obtained in accordance with the process set forth in the Provider Manual. (TEX. INS. CODE ANN. § 1213.003)

TX-5 Gag Clause. Neither Health Plan nor Payor shall limit, prohibit or attempt to prohibit Provider or a Participating Provider from discussing with or communicating in good faith with Covered Persons that are patients or a person designated by a Covered Person that is a patient with respect to (a) information or opinions regarding the

Covered Person's health care, including the patient's medical condition or treatment options; (b) information or opinions regarding the terms, requirements or services of the Coverage Agreement as they relate to the medical needs of the Covered Person; or (c) the termination of the Agreement or the fact that the Participating Provider will otherwise no longer be providing medical care, dental care or health care services under the Coverage Agreement. Neither Health Plan nor Payor shall in any manner penalize, terminate or refuse to compensate for Covered Services a Provider or Participating Provider for communicating in a manner protected by this section with a current, prospective or former patient that is a Covered Person or a person designated by a patient that is a Covered Person. (TEX. INS. CODE ANN. §§ 843.363)

TX-6 Overpayments. Neither Health Plan nor Payor may recover an overpayment to Provider or a Participating Provider if, not later than the 180th day after the date the Participating Provider receives the payment, the Payor, Health Plan or one of their delegates provides written notice of the overpayment to Provider or the Participating Provider that includes the basis and specific reasons for the request for recovery of funds, and either Provider or the Participating Provider makes arrangements for repayment of the requested funds on or before the 45th day after the date the notice is received. (TEX. INS. CODE ANN. §§ 843.350)

TX-7 Access by Payors. Pursuant to the Agreement and notwithstanding anything herein to the contrary, Health Plan has Provider's permission and express authority to provide access to the health care products and services to be provided pursuant hereto, and the contractual discounts provided for herein, to all persons who are Payors, including without limitation, Health Plan and all group customers of Health Plan (including self-funded employers and other organizations). Health Plan may sell, lease or otherwise transfer information regarding the payment or reimbursement terms of the Agreement (and its Attachments) to such persons and Payors. Health Plan will provide prior notification to Provider of the persons and Payors to whom access is granted by providing the name of the Payor by electronic mail, through its provider newsletter or on its provider website; provided, however, Provider acknowledges that prior adequate notice has been provided with respect to Health Plan and all self-funded groups existing as of the date hereof. Provider expressly acknowledges that Health Plan may provide the persons and Payors described above with access to Health Plan's rights and responsibilities under the Agreement. On request of Provider or a Contracted Provider, Health Plan will provide information necessary to determine whether a particular person has been authorized to access Provider's or a Contracted Provider's health care services and the contractual discounts provided for herein. To the extent required by applicable law, the Agreement specifies the applicable fee schedule for each Product and/or line of business contemplated by the Agreement. Each person or Payor granted access to the health care products and services and the contractual discounts hereunder must comply with all applicable terms, limitations and conditions of the Agreement. Health Plan will provide such person or Payor with reasonable access, including electronic access, during normal business hours for the review of the Agreement, which access will be allowed only for the purposes of complying with the terms of the Agreement or applicable state law. Pursuant to its signature to the Agreement, Provider provides its express authority with respect to each line of business and the fee schedule applicable to each such line of business.

Attachment B: Medicare - HMO

EXHIBIT 1
COMPENSATION SCHEDULE
MA PLAN/MA-PD PLAN/DSNP PLAN
PROFESSIONAL SERVICES

County of Tarrant dba Tarrant County Public Health

This compensation schedule ("Compensation Schedule") sets forth the maximum reimbursement amounts for medical and behavioral health Covered Services provided by Contracted Providers to Covered Persons enrolled in a Medicare Product. Provider agrees that in the event that Provider is contracted with a third-party independent practice association (IPA) (or other network arrangement) to provide Covered Services to Covered Persons, such third-party IPA agreement will supersede this Agreement as relating to such Covered Services. Where the Contracted Provider's tax identification number ("TIN") has been designated by the Payor as subject to this Compensation Schedule, Payor shall pay or arrange for payment of a Clean Claim for Covered Services rendered by the Contracted Provider according to the terms of, and subject to the requirements set forth in, the Agreement and this Compensation Schedule. Payment under this Compensation Schedule shall consist of the Allowed Amount as set forth herein less all applicable Cost-Sharing Amounts. All capitalized terms used in this Compensation Schedule shall have the meanings set forth in the Agreement, the applicable Product Attachment, or the Definitions section set forth at the end of this Compensation Schedule.

The maximum compensation for professional Covered Services rendered to a Covered Person shall be the "Allowed Amount." Except as otherwise provided in this Compensation Schedule, the Allowed Amount for professional Covered Services is the lesser of: (i) Allowable Charges; or (ii) 100% of the Medicare fee schedule in effect on the date of service.

Additional Provisions:

1. Code Change Updates. Payor utilizes nationally recognized coding structures (including, without limitation, revenue codes, CPT codes, HCPCS codes, ICD codes, national drug codes, ASA relative values, etc., or their successors) for basic coding and descriptions of the services rendered. Updates to billing-related codes shall become effective on the date ("Code Change Effective Date") that is the later of: (i) the first day of the month following 60 days after publication by the governmental agency having authority over the applicable Product of such governmental agency's acceptance of such code updates, (ii) the effective date of such code updates as determined by such governmental agency or (iii) if a date is not established by such governmental agency or the applicable Product is not regulated by such governmental agency, the date that changes are made to nationally recognized codes. Such updates may include changes to service groupings. Claims processed prior to the Code Change Effective Date shall not be reprocessed to reflect any such code updates.

2. Fee Change Updates. Updates to the fee schedule shall become effective on the effective date of such fee schedule updates, as determined by the Payor ("Fee Change Effective Date"). The date of implementation of any fee schedule updates, i.e. the date on which such fee change is first used for reimbursement ("Fee Change Implementation Date"), shall be the later of: (i) the first date on which Payor is reasonably able to implement the update in the claims payment system; or (ii) the Fee Change Effective Date. Claims processed prior to the Fee Change Implementation Date shall not be reprocessed to reflect any updates to such fee schedule, even if service was provided after the Fee Change Effective Date.

3. Provider Type. Services must be provided by the appropriate provider type or specialty as defined in the Provider Manual. The Allowed Amount may be reduced based on the Contracted Provider's specialty, provider type, licensing/certifications or education as set forth in the Provider Manual.

4. Modifier. Unless specifically indicated otherwise, fee amounts listed in the fee schedule represent global fees and may be subject to reductions based on appropriate Modifier (for example, professional and technical modifiers). As used in the previous sentence, "global fees" refers to services billed without a Modifier, for which the fee amount includes both the professional component and the technical component. Any Cost-Sharing Amounts that the Covered Person is responsible to pay under the Coverage Agreement will be subtracted from the Allowed Amount in determining the amount to be paid.

5. Anesthesia Modifier Pricing Rules. The dollar amount that will be used in the calculation of time-based and non-time based anesthesia management fees in accordance with the anesthesia payment policy. Unless specifically stated otherwise, the anesthesia conversion factor indicated is fixed and will not change. The anesthesia conversion factor is based on an anesthesia time unit value of 15 minutes.

6. Place of Service Pricing Rules. This fee schedule follows CMS guidelines for determining when services are priced at the facility or non-facility fee schedule (with the exception of services performed at Ambulatory Surgery Centers, POS 24, which will be priced at the facility fee schedule).

7. Carve-Out Services. With respect to any "Carve-Out" Covered Services as contemplated in this Agreement, any payment arrangement entered into between Provider and a third party vendor of such services shall supersede compensation hereunder.

8. Payment under this Compensation Schedule. Claims should be coded appropriately according to industry standard coding guidelines (including but not limited to UB Editor, AMA, CPT, CPT Assistant, HCPCS, DRG guidelines, CMS' National Correct Coding Initiative (CCI) Policy Manual, CCI table edits and other CMS guidelines). All payments under this Compensation Schedule are subject to the terms and conditions set forth in the Agreement, the Provider Manual, and any applicable billing manual and claims processing policies.

9. Fee Sources. In the event CMS contains no published fee amount, alternate (or "gap fill") fee sources may be used to supply the fee basis amount for deriving fee amount (the "Alternative Fee Source Amount"). Health Plan will utilize such Alternative Fee Source Amount until such time that CMS publishes its own resource-based relative value scale (RBRVS) value. At such time in the future as CMS publishes its own RBRVS value for that CPT/HCPCS code, Payor will use the CMS fee amount for that code and no longer use the Alternate Fee Source Amount. If CMS has no published fee amount or a gap fill fee source is not available for a Covered Service provided to a Covered Person, Payor may establish a payment amount to apply in determining the Allowed Amount. Until such time as Payor establishes such a payment amount, the maximum compensation shall be 30% of Allowable Charges.

Definitions:

1. **Allowable Charges** means a Contracted Provider's billed charges for services that qualify as Covered Services.

2. **Allowed Amount** means the amount designated in this Compensation Schedule as the maximum amount payable to a Contracted Provider for any particular Covered Service provided to any particular Covered Person, pursuant to this Agreement or its Attachments.

3. **Cost-Sharing Amounts** means any amounts payable by a Covered Person, such as copayments, cost-sharing, coinsurance, deductibles or other amounts that are the Covered Person's financial responsibility under the applicable Coverage Agreement, if applicable.

Attachment B: Medicare - PPO

EXHIBIT 2
COMPENSATION SCHEDULE
MA PLAN/MA-PD PLAN/DSNP PLAN
PROFESSIONAL SERVICES

County of Tarrant dba Tarrant County Public Health

This compensation schedule ("Compensation Schedule") sets forth the maximum reimbursement amounts for medical and behavioral health Covered Services provided by Contracted Providers to Covered Persons enrolled in a Medicare Product. Provider agrees that in the event that Provider is contracted with a third-party IPA (or other network arrangement) to provide Covered Services to Covered Persons, such third-party IPA agreement will supersede this Agreement as relating to such Covered Services. Where the Contracted Provider's tax identification number ("TIN") has been designated by the Payor as subject to this Compensation Schedule, Payor shall pay or arrange for payment of a Clean Claim for Covered Services rendered by the Contracted Provider according to the terms of, and subject to the requirements set forth in, the Agreement and this Compensation Schedule. Payment under this Compensation Schedule shall consist of the Allowed Amount as set forth herein less all applicable Cost-Sharing Amounts. All capitalized terms used in this Compensation Schedule shall have the meanings set forth in the Agreement, the applicable Product Attachment, or the Definitions section set forth at the end of this Compensation Schedule.

The maximum compensation for professional Covered Services rendered to a Covered Person shall be the "Allowed Amount." Except as otherwise provided in this Compensation Schedule, the Allowed Amount for professional Covered Services is the lesser of: (i) Allowable Charges; or (ii) 100% of the Medicare fee schedule in effect on the date of service.

Additional Provisions:

1. Code Change Updates. Payor utilizes nationally recognized coding structures (including, without limitation, revenue codes, CPT codes, HCPCS codes, ICD codes, national drug codes, ASA relative values, etc., or their successors) for basic coding and descriptions of the services rendered. Updates to billing-related codes shall become effective on the date ("Code Change Effective Date") that is the later of: (i) the first day of the month following sixty (60) days after publication by the governmental agency having authority over the applicable Product of such governmental agency's acceptance of such code updates, (ii) the effective date of such code updates as determined by such governmental agency or (iii) if a date is not established by such governmental agency or the applicable Product is not regulated by such governmental agency, the date that changes are made to nationally recognized codes. Such updates may include changes to service groupings. Claims processed prior to the Code Change Effective Date shall not be reprocessed to reflect any such code updates.

2. Fee Change Updates. Updates to the fee schedule shall become effective on the effective date of such fee schedule updates, as determined by the Payor ("Fee Change Effective Date"). The date of implementation of any fee schedule updates, i.e. the date on which such fee change is first used for reimbursement ("Fee Change Implementation Date"), shall be the later of: (i) the first date on which Payor is reasonably able to implement the update in the claims payment system; or (ii) the Fee Change Effective Date. Claims processed prior to the Fee Change Implementation Date shall not be reprocessed to reflect any updates to such fee schedule, even if service was provided after the Fee Change Effective Date.

3. Provider Type. Services must be provided by the appropriate provider type or specialty as defined in the Provider Manual. The Allowed Amount may be reduced based on the Contracted Provider's specialty, provider type, licensing/certifications or education as set forth in the Provider Manual.

4. Modifier. Unless specifically indicated otherwise, fee amounts listed in the fee schedule represent global fees and may be subject to reductions based on appropriate Modifier (for example, professional and technical modifiers). As used in the previous sentence, "global fees" refers to services billed without a Modifier, for which the fee amount includes both the professional component and the technical component. Any Cost-Sharing Amounts that the Covered Person is responsible to pay under the Coverage Agreement will be subtracted from the Allowed Amount in determining the amount to be paid.

5. Anesthesia Modifier Pricing Rules. The dollar amount that will be used in the calculation of time-based and non-time based anesthesia management fees in accordance with the anesthesia payment policy. Unless specifically stated otherwise, the anesthesia conversion factor indicated is fixed and will not change. The anesthesia conversion factor is based on an anesthesia time unit value of 15 minutes.

6. Place of Service Pricing Rules. This fee schedule follows CMS guidelines for determining when services are priced at the facility or non-facility fee schedule (with the exception of services performed at Ambulatory Surgery Centers, POS 24, which will be priced at the facility fee schedule).

7. Carve-Out Services. With respect to any "Carve-Out" Covered Services as contemplated in this Agreement, any payment arrangement entered into between Provider and a third party vendor of such services shall supersede compensation hereunder.

8. Payment under this Compensation Schedule. Claims should be coded appropriately according to industry standard coding guidelines (including but not limited to UB Editor, AMA, CPT, CPT Assistant, HCPCS, DRG guidelines, CMS' National Correct Coding Initiative (CCI) Policy Manual, CCI table edits and other CMS guidelines). All payments under this Compensation Schedule are subject to the terms and conditions set forth in the Agreement, the Provider Manual, and any applicable billing manual and claims processing policies.

9. Fee Sources. In the event CMS contains no published fee amount, alternate (or "gap fill") fee sources may be used to supply the fee basis amount for deriving fee amount (the "Alternative Fee Source Amount"). Health Plan will utilize such Alternative Fee Source Amount until such time that CMS publishes its own RBRVS value. At such time in the future as CMS publishes its own RBRVS value for that CPT/HCPCS code, Payor will use the CMS fee amount for that code and no longer use the Alternate Fee Source Amount. If CMS has no published fee amount or a gap fill fee source is not available for a Covered Service provided to a Covered Person, Payor may establish a payment amount to apply in determining the Allowed Amount. Until such time as Payor establishes such a payment amount, the maximum compensation shall be 30% of Allowable Charges.

Definitions:

1. **Allowable Charges** means a Contracted Provider's billed charges for services that qualify as Covered Services.

2. **Allowed Amount** means the amount designated in this Compensation Schedule as the maximum amount payable to a Contracted Provider for any particular Covered Service provided to any particular Covered Person, pursuant to this Agreement or its Attachments.

3. **Cost-Sharing Amounts** means any amounts payable by a Covered Person, such as copayments, cost-sharing, coinsurance, deductibles or other amounts that are the Covered Person's financial responsibility under the applicable Coverage Agreement, if applicable.

Attachment B: Medicare - HMO

EXHIBIT 3
COMPENSATION SCHEDULE
MMP PLAN
PROFESSIONAL SERVICES

County of Tarrant dba Tarrant County Public Health

This compensation schedule ("Compensation Schedule") sets forth the maximum reimbursement amounts for medical and behavioral health Covered Services provided by Contracted Providers to Covered Persons enrolled in a Medicare Product. Provider agrees that in the event that Provider is contracted with a third-party independent practice association (IPA) (or other network arrangement) to provide Covered Services to Covered Persons, such third-party IPA agreement will supersede this Agreement as relating to such Covered Services. Where the Contracted Provider's tax identification number ("TIN") has been designated by the Payor as subject to this Compensation Schedule, Payor shall pay or arrange for payment of a Clean Claim for Covered Services rendered by the Contracted Provider according to the terms of, and subject to the requirements set forth in, the Agreement and this Compensation Schedule. Payment under this Compensation Schedule shall consist of the Allowed Amount as set forth herein less all applicable Cost-Sharing Amounts. All capitalized terms used in this Compensation Schedule shall have the meanings set forth in the Agreement, the applicable Product Attachment, or the Definitions section set forth at the end of this Compensation Schedule.

For Covered Services rendered to Covered Person who are eligible for Medicare and enrolled in a MMP Plan that may include coverage for both Medicare and Medicaid Covered Services, Contracted Provider's maximum compensation is as follows:

1. Where Payor is the Payor for both Medicare Covered Services and Medicaid Covered Services:

    i) For Covered Services that are Medicare Covered Services and Medicaid Covered Services, Contracted Provider's maximum compensation shall be the Allowed Amount. Except as otherwise provided in this Compensation Schedule the Allowed Amount is the lesser of: (i) Allowable Charges; or (ii) Payor's maximum reimbursement schedule, which shall be the amount payable by Medicare, not including Cost-Sharing Amounts, as primary coverage based on 100% of the Medicare payment rate in effect on the date of service, plus the amount payable by Medicaid as a secondary coverage based on the Medicaid payment rate in effect on the date of service; or

    ii) For Covered Services that are Medicare Covered Services and are not Medicaid Covered Services, Contracted Provider's maximum compensation shall be the Allowed Amount. Except as otherwise provided in this Compensation Schedule the Allowed Amount is the lesser of: (i) Allowable Charges; or (ii) Payor's maximum reimbursement schedule, which shall be 100% of the amount payable based on the Medicare payment rate in effect on the date of service, not including Cost-Sharing Amounts; or

    iii) For Covered Services that are Medicaid Covered Services and are not Medicare Covered Services, Contracted Provider's maximum compensation shall be the Allowed Amount. Except as otherwise provided in this Compensation Schedule the Allowed Amount is the lesser of: (i) Allowable Charges; or (ii) Payor's maximum reimbursement schedule, which shall be 100% of the amount payable by Medicaid, not including any Cost-Sharing Amounts that would have been applied by Medicaid, based on the Medicaid payment rate in effect on the date of service.

Additional Provisions:

1. Code Change Updates. Payor utilizes nationally recognized coding structures (including, without limitation, revenue codes, CPT codes, HCPCS codes, ICD codes, national drug codes, ASA relative values, etc., or their

successors) for basic coding and descriptions of the services rendered. Updates to billing-related codes shall become effective on the date ("Code Change Effective Date") that is the later of: (i) the first day of the month following 60 days after publication by the governmental agency having authority over the applicable Product of such governmental agency's acceptance of such code updates, (ii) the effective date of such code updates as determined by such governmental agency or (iii) if a date is not established by such governmental agency or the applicable Product is not regulated by such governmental agency, the date that changes are made to nationally recognized codes. Such updates may include changes to service groupings. Claims processed prior to the Code Change Effective Date shall not be reprocessed to reflect any such code updates.

2. Fee Change Updates. Updates to the fee schedule shall become effective on the effective date of such fee schedule updates, as determined by the Payor ("Fee Change Effective Date"). The date of implementation of any fee schedule updates, i.e. the date on which such fee change is first used for reimbursement ("Fee Change Implementation Date"), shall be the later of: (i) the first date on which Payor is reasonably able to implement the update in the claims payment system; or (ii) the Fee Change Effective Date. Claims processed prior to the Fee Change Implementation Date shall not be reprocessed to reflect any updates to such fee schedule, even if service was provided after the Fee Change Effective Date.

3. Provider Type. Services must be provided by the appropriate provider type or specialty as defined in the Provider Manual. The Allowed Amount may be reduced based on the Contracted Provider's specialty, provider type, licensing/certifications or education as set forth in the Provider Manual.

4. Modifier. Unless specifically indicated otherwise, fee amounts listed in the fee schedule represent global fees and may be subject to reductions based on appropriate Modifier (for example, professional and technical modifiers). As used in the previous sentence, "global fees" refers to services billed without a Modifier, for which the fee amount includes both the professional component and the technical component. Any Cost-Sharing Amounts that the Covered Person is responsible to pay under the Coverage Agreement will be subtracted from the Allowed Amount in determining the amount to be paid.

5. Anesthesia Modifier Pricing Rules. The dollar amount that will be used in the calculation of time-based and non-time based anesthesia management fees in accordance with the anesthesia payment policy. Unless specifically stated otherwise, the anesthesia conversion factor indicated is fixed and will not change. The anesthesia conversion factor is based on an anesthesia time unit value of 15 minutes.

6. Place of Service Pricing Rules. This fee schedule follows CMS guidelines for determining when services are priced at the facility or non-facility fee schedule (with the exception of services performed at Ambulatory Surgery Centers, POS 24, which will be priced at the facility fee schedule).

7. Carve-Out Services. With respect to any "Carve-Out" Covered Services as contemplated in this Agreement, any payment arrangement entered into between Provider and a third party vendor of such services shall supersede compensation hereunder.

8. Payment under this Compensation Schedule. Claims should be coded appropriately according to industry standard coding guidelines (including but not limited to UB Editor, AMA, CPT, CPT Assistant, HCPCS, DRG guidelines, CMS' National Correct Coding Initiative (CCI) Policy Manual, CCI table edits and other CMS guidelines). All payments under this Compensation Schedule are subject to the terms and conditions set forth in the Agreement, the Provider Manual, and any applicable billing manual and claims processing policies.

9. Fee Sources. In the event CMS contains no published fee amount, alternate (or "gap fill") fee sources may be used to supply the fee basis amount for deriving fee amount (the "Alternative Fee Source Amount"). Health Plan will utilize such Alternative Fee Source Amount until such time that CMS publishes its own resource-based relative value scale (RBRVS) value. At such time in the future as CMS publishes its own RBRVS value for that CPT/HCPCS code, Payor will use the CMS fee amount for that code and no longer use the Alternate Fee Source Amount. If CMS has no published fee amount or a gap fill fee source is not available for a Covered Service

provided to a Covered Person, Payor may establish a payment amount to apply in determining the Allowed Amount. Until such time as Payor establishes such a payment amount, the maximum compensation shall be 30% of Allowable Charges.

Definitions:

1. **Allowable Charges** means a Contracted Provider's billed charges for services that qualify as Covered Services.

2. **Allowed Amount** means the amount designated in this Compensation Schedule as the maximum amount payable to a Contracted Provider for any particular Covered Service provided to any particular Covered Person, pursuant to this Agreement or its Attachments.

3. **Cost-Sharing Amounts** means any amounts payable by a Covered Person, such as copayments, cost-sharing, coinsurance, deductibles or other amounts that are the Covered Person's financial responsibility under the applicable Coverage Agreement, if applicable.

Attachment B: Medicare - PPO

EXHIBIT 4
COMPENSATION SCHEDULE
MMP PLAN
PROFESSIONAL SERVICES

County of Tarrant dba Tarrant County Public Health

This compensation schedule ("Compensation Schedule") sets forth the maximum reimbursement amounts for medical and behavioral health Covered Services provided by Contracted Providers to Covered Persons enrolled in a Medicare Product. Provider agrees that in the event that Provider is contracted with a third-party IPA (or other network arrangement) to provide Covered Services to Covered Persons, such third-party IPA agreement will supersede this Agreement as relating to such Covered Services. Where the Contracted Provider's tax identification number ("TIN") has been designated by the Payor as subject to this Compensation Schedule, Payor shall pay or arrange for payment of a Clean Claim for Covered Services rendered by the Contracted Provider according to the terms of, and subject to the requirements set forth in, the Agreement and this Compensation Schedule. Payment under this Compensation Schedule shall consist of the Allowed Amount as set forth herein less all applicable Cost-Sharing Amounts. All capitalized terms used in this Compensation Schedule shall have the meanings set forth in the Agreement, the applicable Product Attachment, or the Definitions section set forth at the end of this Compensation Schedule.

For Covered Services rendered to Covered Person who are eligible for Medicare and enrolled in a MMP Plan that may include coverage for both Medicare and Medicaid Covered Services, Contracted Provider's maximum compensation is as follows:

1. Where Payor is the Payor for both Medicare Covered Services and Medicaid Covered Services:

   i) For Covered Services that are Medicare Covered Services and Medicaid Covered Services, Contracted Provider's maximum compensation shall be the Allowed Amount. Except as otherwise provided in this Compensation Schedule the Allowed Amount is the lesser of: (i) Allowable Charges; or (ii) Payor's maximum reimbursement schedule, which shall be the amount payable by Medicare, not including Cost-Sharing Amounts, as primary coverage based on 100% of the Medicare payment rate in effect on the date of service, plus the amount payable by Medicaid as a secondary coverage based on the Medicaid payment rate in effect on the date of service; or

   ii) For Covered Services that are Medicare Covered Services and are not Medicaid Covered Services, Contracted Provider's maximum compensation shall be the Allowed Amount. Except as otherwise provided in this Compensation Schedule the Allowed Amount is the lesser of: (i) Allowable Charges; or (ii) Payor's maximum reimbursement schedule, which shall be 100% of the amount payable based on the Medicare payment rate in effect on the date of service, not including Cost-Sharing Amounts; or

   iii) For Covered Services that are Medicaid Covered Services and are not Medicare Covered Services, Contracted Provider's maximum compensation shall be the Allowed Amount. Except as otherwise provided in this Compensation Schedule the Allowed Amount is the lesser of: (i) Allowable Charges; or (ii) Payor's maximum reimbursement schedule, which shall be 100% of the amount payable by Medicaid, not including any Cost-Sharing Amounts that would have been applied by Medicaid, based on the Medicaid payment rate in effect on the date of service.

Additional Provisions:

1. Code Change Updates. Payor utilizes nationally recognized coding structures (including, without limitation, revenue codes, CPT codes, HCPCS codes, ICD codes, national drug codes, ASA relative values, etc., or their

successors) for basic coding and descriptions of the services rendered. Updates to billing-related codes shall become effective on the date ("Code Change Effective Date") that is the later of: (i) the first day of the month following sixty (60) days after publication by the governmental agency having authority over the applicable Product of such governmental agency's acceptance of such code updates, (ii) the effective date of such code updates as determined by such governmental agency or (iii) if a date is not established by such governmental agency or the applicable Product is not regulated by such governmental agency, the date that changes are made to nationally recognized codes. Such updates may include changes to service groupings. Claims processed prior to the Code Change Effective Date shall not be reprocessed to reflect any such code updates.

2. Fee Change Updates. Updates to the fee schedule shall become effective on the effective date of such fee schedule updates, as determined by the Payor ("Fee Change Effective Date"). The date of implementation of any fee schedule updates, i.e. the date on which such fee change is first used for reimbursement ("Fee Change Implementation Date"), shall be the later of: (i) the first date on which Payor is reasonably able to implement the update in the claims payment system; or (ii) the Fee Change Effective Date. Claims processed prior to the Fee Change Implementation Date shall not be reprocessed to reflect any updates to such fee schedule, even if service was provided after the Fee Change Effective Date.

3. Provider Type. Services must be provided by the appropriate provider type or specialty as defined in the Provider Manual. The Allowed Amount may be reduced based on the Contracted Provider's specialty, provider type, licensing/certifications or education as set forth in the Provider Manual.

4. Modifier. Unless specifically indicated otherwise, fee amounts listed in the fee schedule represent global fees and may be subject to reductions based on appropriate Modifier (for example, professional and technical modifiers). As used in the previous sentence, "global fees" refers to services billed without a Modifier, for which the fee amount includes both the professional component and the technical component. Any Cost-Sharing Amounts that the Covered Person is responsible to pay under the Coverage Agreement will be subtracted from the Allowed Amount in determining the amount to be paid.

5. Anesthesia Modifier Pricing Rules. The dollar amount that will be used in the calculation of time-based and non-time based anesthesia management fees in accordance with the anesthesia payment policy. Unless specifically stated otherwise, the anesthesia conversion factor indicated is fixed and will not change. The anesthesia conversion factor is based on an anesthesia time unit value of 15 minutes.

6. Place of Service Pricing Rules. This fee schedule follows CMS guidelines for determining when services are priced at the facility or non-facility fee schedule (with the exception of services performed at Ambulatory Surgery Centers, POS 24, which will be priced at the facility fee schedule).

7. Carve-Out Services. With respect to any "Carve-Out" Covered Services as contemplated in this Agreement, any payment arrangement entered into between Provider and a third party vendor of such services shall supersede compensation hereunder.

8. Payment under this Compensation Schedule. Claims should be coded appropriately according to industry standard coding guidelines (including but not limited to UB Editor, AMA, CPT, CPT Assistant, HCPCS, DRG guidelines, CMS' National Correct Coding Initiative (CCI) Policy Manual, CCI table edits and other CMS guidelines). All payments under this Compensation Schedule are subject to the terms and conditions set forth in the Agreement, the Provider Manual, and any applicable billing manual and claims processing policies.

9. Fee Sources. In the event CMS contains no published fee amount, alternate (or "gap fill") fee sources may be used to supply the fee basis amount for deriving fee amount (the "Alternative Fee Source Amount"). Health Plan will utilize such Alternative Fee Source Amount until such time that CMS publishes its own RBRVS value. At such time in the future as CMS publishes its own RBRVS value for that CPT/HCPCS code, Payor will use the CMS fee amount for that code and no longer use the Alternate Fee Source Amount. If CMS has no published fee amount or a gap fill fee source is not available for a Covered Service provided to a Covered Person, Payor

may establish a payment amount to apply in determining the Allowed Amount. Until such time as Payor establishes such a payment amount, the maximum compensation shall be 30% of Allowable Charges.

Definitions:

1. **Allowable Charges** means a Contracted Provider's billed charges for services that qualify as Covered Services.

2. **Allowed Amount** means the amount designated in this Compensation Schedule as the maximum amount payable to a Contracted Provider for any particular Covered Service provided to any particular Covered Person, pursuant to this Agreement or its Attachments.

3. **Cost-Sharing Amounts** means any amounts payable by a Covered Person, such as copayments, cost-sharing, coinsurance, deductibles or other amounts that are the Covered Person's financial responsibility under the applicable Coverage Agreement, if applicable.

Attachment C: Commercial-Exchange

PRODUCT ATTACHMENT
(INCLUDING REGULATORY REQUIREMENTS AND COMPENSATION SCHEDULE)

THIS PRODUCT ATTACHMENT (this "***Product Attachment***") is made and entered between Superior HealthPlan, Inc. ("***Health Plan***") and Provider.

WHEREAS, Health Plan and Provider entered into that certain provider agreement, as the same may have been amended and supplemented from time to time (the "***Agreement***"), pursuant to which Provider and its Contracted Providers or other Downstream Entities (defined herein) participate in certain Products offered by or available from or through a Company; and

WHEREAS, Contracted Providers will be designated and participate as Participating Providers in the Product described in this Product Attachment, and will be considered to be and will be governed under this Product Attachment as Downstream Entities as defined in this Product Attachment; and

WHEREAS, the Agreement is modified or supplemented as hereafter provided.

NOW THEREFORE, in consideration of the recitals, the mutual promises herein stated, the parties hereby agree to the provisions set forth below.

1. Defined Terms. For purposes of the Commercial Exchange Product, the following terms have the meanings set forth below. All capitalized terms not specifically defined in this Product Attachment will have the meanings given to such terms in the Agreement. Citations to governmental authority requirements provided herein are for convenience only and shall not affect the meaning or interpretation of the terms of this Product Attachment. Such citations may become outdated as these governmental authority requirements are amended from time to time.

1.1 "***Commercial-Exchange Product***" refers to those programs and health benefit arrangements offered by a Company that provide incentives to Covered Persons to utilize the services of certain contracted providers. The Commercial-Exchange Product includes those Coverage Agreements entered into, issued or agreed to by a Payor under which a Company furnishes administrative services or other services in support of a health care program for an individual or group of individuals, which may include access to one or more of the Company's provider networks or vendor arrangements, and which may be provided in connection with a state or governmental-sponsored, employer-sponsored or other private health insurance exchange, except those excluded by Health Plan. The Commercial-Exchange Product does not apply to any Coverage Agreements that are specifically covered by another Product Attachment to the Agreement.

1.2 "***Delegated Entity***" means any party, including an agent or broker, that enters into an agreement with Health Plan to provide administrative services or health care services to qualified individuals, qualified employers or qualified employees and their dependents (as such terms are defined in 45 C.F.R. §156.20).

1.3 "***Downstream Entity***" means any party, including an agent or broker, that enters into an agreement with a Delegated Entity or with another Downstream Entity for purposes of providing administrative or health care services related to the agreement between the Delegated Entity and Health Plan. The term "Downstream Entity" is intended to reach the entity that directly provides administrative services or health care services to qualified individuals, qualified employers, or qualified employees and their dependents (as such terms are defined in 45 C.F.R. §156.20).

1.4 "***Emergency***" or "***Emergency Care***" has the meaning set forth in the Covered Person's Coverage Agreement.

1.5 "***Emergency Medical Condition***" has the meaning set forth in the Covered Person's Coverage Agreement.

1.6 "***State***" means the State of Texas, or such other state to the extent that a Coverage Agreement or Covered Person is subject to such other state's law.

2. Commercial-Exchange Product. This Product Attachment constitutes the "Commercial-Exchange Product Attachment" and is incorporated into the Agreement between Provider and Health Plan. It supplements the Agreement by setting forth specific terms and conditions that apply to the Commercial-Exchange Product with respect to which a Participating Provider has agreed to participate, and with which a Participating Provider must comply in order to maintain such participation. This Product Attachment applies with respect to the provision of health care services, supplies or accommodations (including Covered Services) to Covered Persons enrolled in or covered by a Commercial-Exchange Product.

3. Participation. Except as otherwise provided in this Product Attachment or the Agreement, all Contracted Providers under the Agreement will participate as Participating Providers in this Commercial-Exchange Product, and will provide to Covered Persons enrolled in or covered by a Commercial-Exchange Product, upon the same terms and conditions contained in the Agreement, as supplemented or modified by this Product Attachment, those Covered Services that are provided by Contracted Providers pursuant to the Agreement. In providing such services, Provider shall, and shall cause Contracted Providers, to comply with and abide by the provisions of this Product Attachment and the Agreement (including the Provider Manual).

4. Attachments. This Product Attachment includes the Regulatory Requirements with which Participating Providers are required to comply based on State laws governing the applicable Coverage Agreement or Covered Person, and Compensation Schedule(s) for the Commercial-Exchange Product, which are incorporated herein by reference.

5. Construction. This Product Attachment supplements and forms a part of the Agreement. Except as otherwise provided herein or in the terms of the Agreement, the terms and conditions of the Agreement will remain unchanged and in full force and effect as a result of this Product Attachment. In the event of a conflict between the provisions of the Agreement and the provisions of this Product Attachment, this Product Attachment will govern with respect to health care services, supplies or accommodations (including Covered Services) rendered to Covered Persons enrolled in or covered by a Commercial-Exchange Product. To the extent Provider or any Contracted Provider is unclear about its, his or her respective duties and obligations, Provider or the applicable Contracted Provider shall request clarification from the Company.

6. Term. This Product Attachment will be coterminous with the Agreement unless a Party terminates the participation of the Contracted Provider in this Commercial-Exchange Product in accordance with the applicable provisions of the Agreement or this Product Attachment.

7. Federal Requirements. The following requirements apply to Delegated and Downstream Entities under this Commercial Exchange Product Attachment, which includes but is not limited to Provider and all Contracted Providers.

7.1 Provider's delegated activities and reporting responsibilities, if any, are specified in the Agreement or applicable attachment to the Agreement (e.g., Delegated Credentialing Agreement, Delegated Services Agreement, Statement or Work, or other scope of services attachment). If such attachment is not executed, no administrative functions shall be deemed as delegated.

7.2 CMS, Health Plan and Payor reserve the right to revoke the delegation activities and reporting requirements or to specify other remedies in instances where CMS, Health Plan or the Payor determine that Provider or any Downstream Entity has not performed satisfactorily.

7.3 Provider and all Downstream Entities must comply with all applicable laws and regulations relating to the standards specified under 45 CFR §156.340(a);

7.4 Provider and all Downstream Entities must permit access by the Secretary and Office of Inspector General (OIG) or their designees in connection with their right to evaluate through audit, inspection or other means, to the Provider's or Downstream Entities' books, contracts, computers, or any other electronic systems including medical records and documentation, relating to Health Plan's obligations in accordance with federal standards under 45 CFR §156.340(a) until 10 years from the termination date of this Product Attachment.

8. Other Terms and Conditions. Except as modified or supplemented by this Product Attachment, the compensation hereunder for the provision of Covered Services by Contracted Providers to Covered Persons enrolled in or covered by the Commercial-Exchange Product is subject to all of the other provisions in the Agreement (including the Provider Manual) that affect or relate to compensation for Covered Services provided to Covered Persons.

Attachment C: Commercial-Exchange

SCHEDULE A
REGULATORY REQUIREMENTS

This schedule sets forth the provisions that are required by State or federal law to be included in the Agreement with respect to this Commercial-Exchange Product. Any additional Regulatory Requirements that may apply to the Coverage Agreements or Covered Persons enrolled in or covered by this Product may be set forth in the Provider Manual or another Attachment. To the extent that a Coverage Agreement, or a Covered Person, is subject to the law cited in the parenthetical at the end of a provision on this Schedule A, such provision will apply to the rendering of Covered Services to a Covered Person with such Coverage Agreement, or to such Covered Person, as applicable.

A. Health Plan Requirements. For a Commercial-Exchange Product that is a Health Plan Product, Participating Providers and Health Plan are required to comply with the provisions of the "Contracted Provider-Specific Provisions" and "State-Mandated Provisions" schedules of the Agreement, as applicable, with the following exception described below:

1. "State-Mandated Provisions" schedule, Section 5 ("Compliance with Prompt Payment Regulations") shall be revised to delete the reference to "Medicaid Covered Persons" and to replace it with "Covered Persons" and revised to replace the phrase "within 30 days of its receipt" with "within 45 days of its receipt."

B. Insurance Company Requirements. For a Commercial-Exchange Product for which the Payor is not Health Plan, Participating Providers and the Payor are required to comply with the following provisions:

The following provisions are only applicable to HMO product lines:

TX-1 Batched Claims. No Payor or delegate or clearinghouse of a Payor or delegate may refuse to process or pay an electronically submitted clean claim, as that term is defined in Tex. Ins. Code Ann. § 843.336, as may be amended, because the claim is submitted together with or in a batch submission with a claim that is not a clean claim. (Tex. Ins. Code Ann. §§ 843.323; 1301.0641)

TX-2 Upon the giving or receipt of any notice to termination or non-renewal of a Participating Provider's participation under a Coverage Agreement, the Participating Provider will immediately provide the Health Plan or Payor with a list of the Covered Persons currently being treated by the Participating Provider. If the Health Plan or Payor terminates the participation of a Participating Provider under a Coverage Agreement, the Health Plan, Payor or its delegate will provide notice to each Covered Person currently being treated by the affected Participating Provider of the impending termination of the Participating Provider's participation as a Participating Provider under the Covered Person's Coverage Agreement. If Provider or a Participating Provider terminates the participation of the Participating Provider under a Coverage Agreement, the Participating Provider will provide notice to each Covered Person currently being treated by the affected Participating Provider of the impending termination of the Participating Provider's participation as a Participating Provider under the Covered Person's Coverage Agreement. (Tex. Ins. Code Ann. §§ 1301.152; 1301.160)

TX-3 Podiatrists. If a Participating Provider is a podiatrist licensed by the Texas State Board of Podiatric Medical Examiners, the provisions set forth in this Section apply. The Participating Provider may request, and the Payor shall provide not later than the 30th day after the date of the request, a copy of the coding guidelines and payment schedules applicable to the compensation that the Participating Provider receives or will receive under this Attachment. The Payor may not unilaterally make material retroactive revisions to the coding guidelines and payment schedules. The Participating Provider may, while practicing within the scope of the law regulating podiatry, provide x-rays and nonprefabricated orthotics covered by the Coverage Agreement. (TEX. INS. CODE ANN. §§ 843.311, 1301.062)

TX-4 Claim Submission; Prompt Payment.

TX-4.1 As required by applicable State law, Provider and each Participating Provider shall submit a claim no later than the 95th day after the date of service. A claim not submitted within such time frame may be denied for payment, unless the failure to submit the claim in compliance with this section is a result of a catastrophic event that substantially interferes with the normal business operations of the Provider or the Participating Provider. Neither Provider nor a Participating Provider (or any delegate) shall submit a duplicate claim for payment before the 46th day after the date the original claim was submitted. (Tex. Ins. Code Ann. §§ 843.337, 1301.102)

TX-4.2 Except as otherwise provided in applicable State law, Payor shall determine whether a clean claim submitted by Provider or a Participating Provider for Covered Services is payable not later than the 45th day after the date on which a clean claim in a nonelectronic format is received, or not later than the 30th day after the date on which a clean claim in an electronic format is received. Except as otherwise provided in applicable State law, Payor shall pay clean claims submitted by Provider or a Participating Provider for Covered Services on or before the later of (i) the 45th day after the date on which the claim for payment is received with the documentation reasonably necessary to process the claim, or (ii) the last day in the time period specified in the Agreement or the Provider Manual for payment of claims. (TEX. INS. CODE ANN. §§ 843.336-843.354; 1301.064, and 1301.101-109)

TX-5 Waiver of Electronic Claims. When expressly required by applicable State law, a waiver of any requirement under the Agreement or this Product Attachment for the electronic submission of a claim made with respect to a Coverage Agreement may be obtained in accordance with the process set forth in the Provider Manual. (TEX. INS. CODE ANN. § 1213.003)

TX-6 Gag Clause. Neither Health Plan nor Payor shall limit, prohibit, or attempt to prohibit Provider or a Participating Provider from discussing with or communicating in good faith with Covered Persons that are patients or a person designated by a Covered Person that is a patient with respect to: (a) information or opinions regarding the Covered Person's health care, including the patient's medical condition or treatment options; (b) information or opinions regarding the terms, requirements, or services of the Coverage Agreement as they relate to the medical needs of the Covered Person; or (c) the termination of the Agreement or the fact that the Participating Provider will otherwise no longer be providing medical care, dental care, or health care services under the Coverage Agreement. Neither Health Plan nor Payor shall in any manner penalize, terminate, or refuse to compensate for Covered Services a Provider or Participating Provider for communicating in a manner protected by this section with a current, prospective, or former patient that is a Covered Person, or a person designated by a patient that is a Covered Person. (TEX. INS. CODE ANN. §§ 843.363, 1301.067)

TX-7 Complaint Resolution. The Agreement or Provider Manual, as applicable, sets forth or identifies the mechanism to be used utilized in resolving complaints initiated by a Covered Person, Provider or a Participating Provider. (TEX. INS. CODE ANN. § 1301.055)

TX-8 Discounted Fees. Provider and each Participating Provider agree that to the extent that Provider or a Participating Provider is compensated on a discounted fee basis, the Covered Person may be billed only on the discounted fee and not the full charge for services. (TEX. INS. CODE ANN. § 1301.061)

TX-9 Overpayments. Neither Health Plan nor Payor may recover an overpayment to Provider or a Participating Provider if, not later than the 180th day after the date the Participating Provider receives the payment, the Payor, Health Plan or one of their delegates provides written notice of the overpayment to Provider or the Participating Provider that includes the basis and specific reasons for the request for recovery of funds, and either Provider or the Participating Provider makes arrangements for repayment of the requested funds on or before the 45th day after the date the notice is received. (TEX. INS. CODE ANN. §§ 843.350, 1301.132)

TX-10 Access by Payors. Pursuant to the Agreement and notwithstanding anything herein to the contrary, Health Plan has Provider's permission and express authority to provide access to the health care products and services

to be provided pursuant hereto, and the contractual discounts provided for herein, to any and all persons who are Payors, including without limitation, Health Plan, and all group customers of Health Plan (including self-funded employers and other organizations). Health Plan may sell, lease, or otherwise transfer information regarding the payment or reimbursement terms of the Agreement (and its Attachments) to such persons and Payors. Health Plan will provide prior notification to Provider of the persons and Payors to whom access is granted by providing the name of the Payor by electronic mail, through its provider newsletter or on its provider website; provided, however, Provider acknowledges that prior adequate notice has been provided with respect to Health Plan, and all self-funded groups existing as of the date hereof. Provider expressly acknowledges that Health Plan may provide the persons and Payors described above with access to Health Plan's rights and responsibilities under the Agreement. On request of Provider or a Contracted Provider, Health Plan will provide information necessary to determine whether a particular person has been authorized to access the Provider's or a Contracted Provider's health care services and the contractual discounts provided for herein. To the extent required by applicable law, the Agreement specifies the applicable fee schedule for each Product and/or line of business contemplated by the Agreement. Each person or Payor granted access to the health care products and services and the contractual discounts hereunder must comply with all applicable terms, limitations, and conditions of the Agreement. Health Plan will provide such person or Payor with reasonable access, including electronic access, during normal business hours for the review of the Agreement, which access will be allowed only for the purposes of complying with the terms of the Agreement or applicable state law. Pursuant to its signature to the Agreement, Provider provides its express authority with respect to each line of business and the fee schedule applicable to each such line of business.

The following provisions are only applicable to EPO product line:

TX-11 Contracting with Others. The Agreement does not restrict a participating provider from contracting with other insurers, preferred provider plans, preferred provider networks or organizations, exclusive provider benefit plans, exclusive provider networks or organizations, health care collaboratives, or HMOs. (28 TEX. ADMIN. CODE § 3.3703(a)(1))

TX-12 Limitation on Participation. Any term or condition of the Agreement limiting participation on the basis of quality considerations shall be construed to be consistent with established standards of care for the applicable profession. (28 TEX. ADMIN. CODE § 3.3703(a)(2))

TX-13 Provider Privileges. In the case of participating providers who provide a significant portion of care in a hospital or institutional provider setting, the Agreement may require the possession of practice privileges at participating hospitals or institutions, provided, however, if no participating hospital or facility offers privileges to a certain class of physicians or providers, the lack of hospital or facility provider privileges may not be a basis for denial of participation as a participating provider to such physicians or providers of that class. (28 TEX. ADMIN. CODE § 3.3703(a)(3))

TX-14 Staff Membership or Privileges. A physician or provider is not required to enter into a participating provider agreement as a condition of staff membership or privileges at a particular hospital or facility. This prohibition does not apply to requirements concerning practice conditions other than conditions of membership or privileges. (28 TEX. ADMIN. CODE § 3.3703(a)(4))

TX-15 Billing for Unnecessary Care. A participating provider will not bill the member for unnecessary care, if the care has been determined to be unnecessary, provided, however, the participating provider will not be required to pay for hospital, institutional, laboratory, x-ray, or like charges resulting from the provision of services lawfully ordered by a physician or provider, even though such service may be determined to be unnecessary. (28 Tex. ADMIN. Code § 3.3703(a)(5))

TX-16 Referrals to Other Providers. The Agreement does not impose restrictions on the classes of physicians and providers who may refer a member to another physician or provider. The Agreement does not require a referring physician or provider to bear the expenses of a referral for specialty care in or out of the participating provider network. (28 TEX. ADMIN. CODE § 3.3703(a)(6))

TX-17 Financial Incentives. Financial incentives will not be provided to a physician or a provider that act directly or indirectly as an inducement to limit medically necessary services. The requirements of TX-16 (above) and this Paragraph TX-17 do not prohibit the savings from cost-effective utilization of health services from being shared with participating providers in the aggregate. (28 TEX. ADMIN. CODE § 3.3703(a)(7))

TX-18 Resolution of Complaints. The Agreement provides for a mechanism for the resolution of complaints initiated by a member, a physician, physician group, or provider, which mechanism provides for reasonable due process including, in an advisory role only, a review panel selected in accordance with Section 3.3706(b)(2) of the PPO/EPO Regulations. (28 TEX. ADMIN. CODE § 3.3703(a)(8))

TX-19 Hold Harmless. A provider, physician, or physician group will not be required to execute a hold harmless clause that shifts the tort liability resulting from acts or omissions of Health Plan to the participating provider. (28 TEX. ADMIN. CODE § 3.3703(a)(9))

TX-20 Member Billing. Any participating provider who is compensated on a discounted fee basis agrees to bill the member only on the discounted fee and not the full charge. (28 TEX. ADMIN. CODE § 3.3703(a)(10))

TX-21 Prompt Payment. Health Plan will comply with all applicable statutes and rules pertaining to prompt payment of clean claims with respect to payment to the provider for covered services rendered to members. (28 TEX. ADM. CODE § 3.3703(a)(11))

TX-22 Continuity of Care. Health Plan and the participating provider will comply with Tex. Ins. Code §§1301.152 - 1301.154, relating to continuity of care. (28 TEX. ADM. CODE §3.3703(a)(12))

TX-23 Member Communication. Health Plan will not, as a condition of the Agreement or in any other manner, prohibit, attempt to prohibit, or discourage a physician or provider from discussing with or communicating to a current, prospective, or former member, or a person designated by a member, information or an opinion: (a) regarding the member's health care, including the member's medical condition or treatment options; or (2) in good faith regarding the provisions, terms, requirements, or services of the health insurance coverage as they relate to the member's medical needs. Health Plan may not in any way penalize, terminate the participation of, or refuse to compensate for covered services, a physician or health care provider for discussing or communicating with a current, prospective, or former member, or a person designated by a member. (28 TEX. ADM. CODE § 3.3703(a)(13))

TX-24 Economic Profiles. To the extent Health Plan conducts, uses or relies upon economic profiling to terminate physicians or providers from a plan, it will make available to a physician or provider on request the economic profile of that physician or provider, including the written criteria by which the physician's or provider's performance is to be measured. An economic profile must be adjusted to recognize the characteristics of a physician's or provider's practice that may account for variations from expected costs. (28 TEX. ADMIN. CODE § 3.3703(a)(14))

TX-25 Quality Assessments. To the extent Health Plan engages in quality assessments, it will do so in accordance with the requirements of applicable law through a panel of at least three physicians selected by Health Plan from among a list of participating physicians. The participating physicians in the applicable service area shall provide the list of physicians to Health Plan. (28 TEX. ADMIN. CODE § 3.3703(a)(15))

TX-26 Immunization and Vaccination Protocol. A participating physician is not required to issue an immunization or vaccination protocol for an immunization or vaccination to be administered to a member by a pharmacist. (28 TEX. ADMIN. CODE § 3.3703(a)(16))

TX-27 Immunizations and Vaccinations by Pharmacist. A pharmacist will not be prohibited from administering immunizations or vaccinations if such immunizations or vaccinations are administered in accordance with the Tex. Occ. Code Chapters 551-566 and 568-569, and applicable rules promulgated thereunder. (28 TEX. ADMIN. CODE § 3.3703(a)(17))

TX-28 Member Notice Upon Termination. If the participating provider voluntarily terminates the Agreement, the participating provider must provide reasonable notice to the member, and Health Plan will provide assistance to the participating provider in assuring that such notice is provided. (28 TEX. ADMIN. CODE § 3.3703(a)(18))

TX-29 Termination Review. Written notice will be provided to the participating provider on termination of the Agreement by Health Plan, and such notice will include the participating provider's right to request a review. (TEX. ADMIN. CODE § 3.3703(a)(19))

TX-30 Information on Compensation. The participating provider is entitled, upon request, to all information necessary to determine that the participating provider is being compensated in accordance with the terms of the Agreement. The participating provider may make the request for information by any reasonable and verifiable means. The information must include a level of detail sufficient to enable a reasonable person with sufficient training, experience, and competence in claims processing to determine the payment to be made for covered services that are rendered to members. Health Plan may provide the required information by any reasonable method through which the participating provider can access the information, including e-mail, website, computer disks, paper, or access to an electronic database. Health Plan will provide the fee schedules and other required information by the 30th day after receipt of the request.

a. This information will include a specific summary and explanation of all payment and reimbursement methodologies that will be used to pay claims submitted by the participating provider, including the information required in Section 3.3703(a)(20) of the PPO/EPO Regulations.

b. In the case of a reference to source information as the basis for fee computation that is outside the control of Health Plan, such as state Medicaid or federal Medicare fee schedules, the information will clearly identify the source and explain the procedure by which the participating provider may readily access the source electronically, telephonically, or as otherwise agreed to by the parties.

c. Nothing herein may be construed to require Health Plan to provide specific information that would violate any applicable copyright law or licensing agreement. However, Health Plan will supply, in lieu of any information withheld on the basis of copyright law or licensing agreement, a summary of the information that will allow a reasonable person with sufficient training, experience, and competence in claims processing to determine the payment to be made for covered services that are rendered to members.

d. No amendment, revision, or substitution of claims payment procedures or any of the information required to be provided will be effective as to the participating provider, unless Health Plan provides at least 90 calendar days written notice to the participating provider identifying with specificity the amendment, revision or substitution. Health Plan will not make retroactive changes to claims payment procedures or to any of the information required to be provided as described above.

e. A participating provider that receives the information described above (i) may not use or disclose the information for any purpose other than for practice management, billing activities, other business operations, or communications with a governmental agency involved in the regulation of health care or insurance; (ii) may not use the information to knowingly submit a claim for payment that does not accurately represent the level, type or amount of services that were actually provided to a member or to misrepresent any aspect of the services; and (iii) may not rely upon the information as a representation that a member is covered for that service under the terms of the member's policy or certificate.

f. A participating provider that receives the information described above may terminate the Agreement on or before the 30th day after the date the participating provider receives the information without penalty or discrimination with respect to the participation in other health care products or plans of Health Plan. If a

participating provider chooses to terminate the Agreement, Health Plan is required to assist the participating provider in providing the notice required by Paragraph TX-28 above. (28 Tex. ADMIN. Code § 3.3703(a)(20))

TX-31 Other Health Benefit Coverage. A participating provider must retain in its records updated information concerning a member's other health benefit plan coverage. (28 Tex. ADMIN. Code § 3.3703(a)(21))

TX-32 Claim Submission. Upon request by a participating provider, Health Plan agrees that it and its clearinghouse will not refuse to process or pay an electronically submitted clean claim because the claim is submitted together with or in a batch submission with a claim that is deficient. As used in this paragraph, the term batch submission is a group of electronic claims submitted for processing at the same time within a HIPAA standard ASC X12N 837 Transaction Set and identified by a batch control number. (28 Tex. ADMIN. Code § 3.3703(a)(22))

TX-33 Referral Information. A referring physician or provider, or a designee, must disclose to the member (a) that the physician, provider, or facility to whom the member is being referred might not be a participating provider; and (b) if applicable, that the referring physician or provider has an ownership interest in the facility to which the member is being referred. The notice specified in (a) will allow for exceptions for emergency care and as necessary to avoid interruption or delay of medically necessary care and will not limit access to nonparticipating providers. (28 Tex. ADMIN. Code § 3.3703(a)(23) and (24))

TX-34 Overpayments. The participating provider who receives an overpayment from a member must refund the amount of the overpayment to the member not later than the 30th day after the date the participating provider determines that an overpayment has been made. (28 Tex. ADMIN. Code § 3.3703(a)(25))

TX-35 Facility Based Physician Groups. A participating hospital or facility must provide notice to Health Plan of the termination of a contract with a facility-based physician group (that is a participating provider) as soon as reasonably practicable, but not later than the fifth business day following termination of the contract. (28 Tex. ADMIN. Code § 3.3703(a)(26))

TX-36 Referrals to Out-Of-Network Providers. Except for instances of emergency care, a participating provider referring a member to a hospital or facility for surgery must (a) notify the member of the possibility that out-of-network providers may provide treatment and that the member may contact Health Plan for more information; (b) notify Health Plan that surgery has been recommended; and (c) notify Health Plan of the hospital or facility that has been recommended for the surgery. (28 Tex. ADMIN. Code § 3.3703(a)(27))

TX-37 Referrals to Out-Of-Network Facilities. Except for instances of emergency care, when scheduling surgery, a hospital or facility must (a) notify the member of the possibility that out-of-network providers may provide treatment and that the member may contact Health Plan for more information; and (b) notify Health Plan that surgery has been scheduled. (28 Tex. ADMIN. Code § 3.3703(a)(28))

Attachment C: Commercial-Exchange - EPO

EXHIBIT 1
COMPENSATION SCHEDULE
PROFESSIONAL SERVICES

County of Tarrant dba Tarrant County Public Health

This compensation schedule ("Compensation Schedule") sets forth the maximum reimbursement amounts for medical and behavioral health Covered Services provided by Contracted Providers to Covered Persons enrolled in a Commercial-Exchange Product. Where the Contracted Provider's tax identification number ("TIN") has been designated by the Payor as subject to this Compensation Schedule, Payor shall pay or arrange for payment of a Clean Claim for Covered Services rendered by the Contracted Provider according to the terms of, and subject to the requirements set forth in, the Agreement and this Compensation Schedule. Payment under this Compensation Schedule shall consist of the Allowed Amount as set forth herein less all applicable Cost-Sharing Amounts. All capitalized terms used in this Compensation Schedule shall have the meanings set forth in the Agreement, the applicable Product Attachment, or the Definitions section set forth at the end of this Compensation Schedule.

The maximum compensation for professional Covered Services rendered to a Covered Person shall be the "Allowed Amount." Except as otherwise provided in this Compensation Schedule, the Allowed Amount for professional Covered Services is the lesser of: (i) Allowable Charges; or (ii) the applicable "Contracted Rate" set forth below in Table 1, in accordance with the hierarchy of current year versions of these publicly made federal schedules.

Table 1.

Schedule	Source	Carrier/Locality	Contracted Rate
CMS Clinical Laboratory Fee Schedule	www.cms.gov	04412/99	50%
CMS DMEPOS Fee Schedule	www.cms.gov	TX	50%
CMS Medicare Part B Drug Average Sales Price	www.cms.gov	N/A	100%
CMS RBRVS (PT/OT/ST Services)	www.cms.gov	04412/99	70%
CMS RBRVS (Radiology Services)	www.cms.gov	04412/99	70%
CMS RBRVS	www.cms.gov	04412/99	100%
MCO Gap Fill Schedule	www.superiorhealthplan.com	N/A	100%

Anesthesia Contracted Providers. The maximum compensation for anesthesia Covered Services rendered to a Covered Person shall be the "Allowed Amount." Except as otherwise provided in this Compensation Schedule, the Allowed Amount for anesthesia Covered Services is the anesthesia conversion factor for physician and CRNA services which is based on an anesthesia time unit value of 15 minutes and set at a conversion factor of $65.00 per unit and will be calculated in accordance with the American Society of Anesthesiologists ("ASA") Coding and Billing Policy. Payment of Anesthesia/CRNA services for obstetrics will be subject to the following cap limits: Labor & Vaginal Delivery 26 units or $1,690 and Labor & C-Section Delivery 31 units or $2,015.

Default. If there is no established payment amount set forth above in Table 1 or in the "Anesthesia Contracted Providers" subsection above, for a Covered Service provided to a Covered Person, Payor may establish a payment

amount to apply in determining the Allowed Amount. Until such time as Payor establishes such a payment amount, the maximum compensation shall be 30% of Allowable Charges.

Therapy Assistants. The maximum compensation for therapy assistant Covered Services rendered to a Covered Person shall be the "Allowed Amount." Except as otherwise provided in this Compensation Schedule, the Allowed Amount for therapy assistant Covered Services is 70% of the applicable professional "Contracted Rate" set forth above in Table 1 for like services rendered by a licensed Physical Therapy, Occupational Therapy or Speech Therapy Provider(s).

Mid-Level Behavioral Health Professionals. The maximum compensation for mid-level behavioral health professional Covered Services rendered to a Covered Person shall be the "Allowed Amount." Except as otherwise provided in this Compensation Schedule, the Allowed Amount for Covered Services provided by a Licensed Professional Counselor (LPC), a Licensed Clinical Social Worker (LCSW), or a Licensed Marriage and Family Therapist (LMFT), in compliance with applicable professional licensing laws and regulations, is 85% of the applicable professional "Contracted Rate" set forth above in Table 1 for like services rendered by a Psychiatrist and Psychologists.

Mid-Level Medical Health Professionals. The maximum compensation for mid-level medical professional Covered Services rendered to a Covered Person shall be the "Allowed Amount." Except as otherwise provided in this Compensation Schedule, the Allowed Amount for Covered Services provided by a Physician Assistant (PA), Nurse Practitioner (NP) or Clinical Nurse Specialist (CNS), in compliance with applicable professional licensing laws and regulations, is 85% of the applicable professional "Contracted Rate" set forth above in Table 1 for like services rendered by a Physician (M.D. or D.O.).

Additional Provisions:

1. Therapy Services. Therapy services include any durable medical equipment or medical supplies billed by Provider and/or Contracted Provider.

2. Code Change Updates. Payor utilizes nationally recognized coding structures (including, without limitation, revenue codes, CPT codes, HCPCS codes, ICD codes, national drug codes, ASA relative values, etc., or their successors) for basic coding and descriptions of the services rendered. Updates to billing-related codes shall become effective on the date ("Code Change Effective Date") that is the later of: (i) the first day of the month following sixty (60) days after publication by the governmental agency having authority over the applicable Product of such governmental agency's acceptance of such code updates, (ii) the effective date of such code updates as determined by such governmental agency or (iii) if a date is not established by such governmental agency or the applicable Product is not regulated by such governmental agency, the date that changes are made to nationally recognized codes. Such updates may include changes to service groupings. Claims processed prior to the Code Change Effective Date shall not be reprocessed to reflect any such code updates.

3. Fee Change Updates. Updates to the fee schedule shall become effective on the effective date of such fee schedule updates, as determined by the Payor ("Fee Change Effective Date"). The date of implementation of any fee schedule updates, i.e. the date on which such fee change is first used for reimbursement ("Fee Change Implementation Date"), shall be the later of: (i) the first date on which Payor is reasonably able to implement the update in the claims payment system; or (ii) the Fee Change Effective Date. Claims processed prior to the Fee Change Implementation Date shall not be reprocessed to reflect any updates to such fee schedule, even if service was provided after the Fee Change Effective Date.

4. Payment under this Compensation Schedule. All payments under this Compensation Schedule are subject to the terms and conditions set forth in the Agreement, the Provider Manual and any applicable billing manual.

Definitions:

1. **Allowed Amount** means the amount designated in this Compensation Schedule as the maximum amount payable to a Contracted Provider for any particular Covered Service provided to any particular Covered Person, pursuant to this Agreement or its Attachments.

2. **Allowable Charges** means a Contracted Provider's billed charges for services that qualify as Covered Services.

3. **Cost-Sharing Amounts** means any amounts payable by a Covered Person, such as copayments, cost-sharing, coinsurance, deductibles or other amounts that are the Covered Person's financial responsibility under the applicable Coverage Agreement, if applicable.

EXHIBIT 2
COMPENSATION SCHEDULE
PROFESSIONAL SERVICES

County of Tarrant dba Tarrant County Public Health

Provider participation in MCO's "Ambetter Value" HMO requires a SEPARATE Compensation Schedule and is specifically not contemplated by the Parties under this Agreement; absent said separate Compensation Schedule, all members whose ID card indicate member's benefits are under the MCO's "Ambetter Value" HMO are not covered under this Compensation Schedule.

This compensation schedule ("Compensation Schedule") sets forth the maximum reimbursement amounts for medical and behavioral health Covered Services provided by Contracted Providers to Covered Persons enrolled in a Commercial-Exchange Product. Where the Contracted Provider's tax identification number ("TIN") has been designated by the Payor as subject to this Compensation Schedule, Payor shall pay or arrange for payment of a Clean Claim for Covered Services rendered by the Contracted Provider according to the terms of, and subject to the requirements set forth in, the Agreement and this Compensation Schedule. Payment under this Compensation Schedule shall consist of the Allowed Amount as set forth herein less all applicable Cost-Sharing Amounts. All capitalized terms used in this Compensation Schedule shall have the meanings set forth in the Agreement, the applicable Product Attachment, or the Definitions section set forth at the end of this Compensation Schedule.

The maximum compensation for professional Covered Services rendered to a Covered Person shall be the "Allowed Amount." Except as otherwise provided in this Compensation Schedule, the Allowed Amount for professional Covered Services is the lesser of: (i) Allowable Charges; or (ii) the applicable "Contracted Rate" set forth below in Table 1, in accordance with the hierarchy of current year versions of these publicly made federal schedules.

Table 1.

Schedule	Source	Carrier/Locality	Contracted Rate
CMS Clinical Laboratory Fee Schedule	www.cms.gov	04412/99	50%
CMS DMEPOS Fee Schedule	www.cms.gov	TX	50%
CMS Medicare Part B Drug Average Sales Price	www.cms.gov	N/A	100%
CMS RBRVS (PT/OT/ST Services)	www.cms.gov	04412/99	70%
CMS RBRVS (Radiology Services)	www.cms.gov	04412/99	70%
CMS RBRVS	www.cms.gov	04412/99	100%
MCO Gap Fill Schedule	www.superiorhealthplan.com	N/A	100%

Anesthesia Contracted Providers. The maximum compensation for anesthesia Covered Services rendered to a Covered Person shall be the "Allowed Amount." Except as otherwise provided in this Compensation Schedule, the Allowed Amount for anesthesia Covered Services is the anesthesia conversion factor for physician and CRNA services which is based on an anesthesia time unit value of 15 minutes and set at a conversion factor of $65.00 per unit and will be calculated in accordance with the American Society of Anesthesiologists ("ASA") Coding and Billing

Policy. Payment of Anesthesia/CRNA services for obstetrics will be subject to the following cap limits: Labor & Vaginal Delivery 26 units or $1,690 and Labor & C-Section Delivery 31 units or $2,015.

Default. If there is no established payment amount set forth above in Table 1 or in the "Anesthesia Contracted Providers" subsection above, for a Covered Service provided to a Covered Person, Payor may establish a payment amount to apply in determining the Allowed Amount. Until such time as Payor establishes such a payment amount, the maximum compensation shall be 30% of Allowable Charges.

Therapy Assistants. The maximum compensation for therapy assistant Covered Services rendered to a Covered Person shall be the "Allowed Amount." Except as otherwise provided in this Compensation Schedule, the Allowed Amount for therapy assistant Covered Services is 70% of the applicable professional "Contracted Rate" set forth above in Table 1 for like services rendered by a licensed Physical Therapy, Occupational Therapy or Speech Therapy Provider(s).

Mid-Level Behavioral Health Professionals. The maximum compensation for mid-level behavioral health professional Covered Services rendered to a Covered Person shall be the "Allowed Amount." Except as otherwise provided in this Compensation Schedule, the Allowed Amount for Covered Services provided by a Licensed Professional Counselor (LPC), a Licensed Clinical Social Worker (LCSW), or a Licensed Marriage and Family Therapist (LMFT), in compliance with applicable professional licensing laws and regulations, is 85% of the applicable professional "Contracted Rate" set forth above in Table 1 for like services rendered by a Psychiatrist and Psychologists.

Mid-Level Medical Health Professionals. The maximum compensation for mid-level medical professional Covered Services rendered to a Covered Person shall be the "Allowed Amount." Except as otherwise provided in this Compensation Schedule, the Allowed Amount for Covered Services provided by a Physician Assistant (PA), Nurse Practitioner (NP) or Clinical Nurse Specialist (CNS), in compliance with applicable professional licensing laws and regulations, is 85% of the applicable professional "Contracted Rate" set forth above in Table 1 for like services rendered by a Physician (M.D. or D.O.).

Additional Provisions:

1. Therapy Services. Therapy services include any durable medical equipment or medical supplies billed by Provider and/or Contracted Provider.

2. Code Change Updates. Payor utilizes nationally recognized coding structures (including, without limitation, revenue codes, CPT codes, HCPCS codes, ICD codes, national drug codes, ASA relative values, etc., or their successors) for basic coding and descriptions of the services rendered. Updates to billing-related codes shall become effective on the date ("Code Change Effective Date") that is the later of: (i) the first day of the month following sixty (60) days after publication by the governmental agency having authority over the applicable Product of such governmental agency's acceptance of such code updates, (ii) the effective date of such code updates as determined by such governmental agency or (iii) if a date is not established by such governmental agency or the applicable Product is not regulated by such governmental agency, the date that changes are made to nationally recognized codes. Such updates may include changes to service groupings. Claims processed prior to the Code Change Effective Date shall not be reprocessed to reflect any such code updates.

3. Fee Change Updates. Updates to the fee schedule shall become effective on the effective date of such fee schedule updates, as determined by the Payor ("Fee Change Effective Date"). The date of implementation of any fee schedule updates, i.e. the date on which such fee change is first used for reimbursement ("Fee Change Implementation Date"), shall be the later of: (i) the first date on which Payor is reasonably able to implement the update in the claims payment system; or (ii) the Fee Change Effective Date. Claims processed prior to the Fee Change Implementation Date shall not be reprocessed to reflect any updates to such fee schedule, even if service was provided after the Fee Change Effective Date.

4. Payment under this Compensation Schedule. All payments under this Compensation Schedule are subject to the terms and conditions set forth in the Agreement, the Provider Manual and any applicable billing manual.

Definitions:

1. **Allowed Amount** means the amount designated in this Compensation Schedule as the maximum amount payable to a Contracted Provider for any particular Covered Service provided to any particular Covered Person, pursuant to this Agreement or its Attachments.

2. **Allowable Charges** means a Contracted Provider's billed charges for services that qualify as Covered Services.

3. **Cost-Sharing Amounts** means any amounts payable by a Covered Person, such as copayments, cost-sharing, coinsurance, deductibles or other amounts that are the Covered Person's financial responsibility under the applicable Coverage Agreement, if applicable.

EXHIBIT 3
COMPENSATION SCHEDULE
PROFESSIONAL SERVICES

County of Tarrant dba Tarrant County Public Health

This compensation schedule ("Compensation Schedule") sets forth the maximum reimbursement amounts for medical and behavioral health Covered Services provided by Contracted Providers to Covered Persons enrolled in MCO's Ambetter Value HMO Commercial-Exchange Product. Where the Contracted Provider's tax identification number ("TIN") has been designated by the Payor as subject to this Compensation Schedule, Payor shall pay or arrange for payment of a Clean Claim for Covered Services rendered by the Contracted Provider according to the terms of, and subject to the requirements set forth in, the Agreement and this Compensation Schedule. Payment under this Compensation Schedule shall consist of the Allowed Amount as set forth herein less all applicable Cost-Sharing Amounts. All capitalized terms used in this Compensation Schedule shall have the meanings set forth in the Agreement, the applicable Product Attachment, or the Definitions section set forth at the end of this Compensation Schedule.

The maximum compensation for professional Covered Services rendered to a Covered Person shall be the "Allowed Amount." Except as otherwise provided in this Compensation Schedule, the Allowed Amount for professional Covered Services is the lesser of: (i) Allowable Charges; or (ii) the applicable "Contracted Rate" set forth below in Table 1, in accordance with the hierarchy of current year versions of these publicly made federal schedules.

Table 1.

Schedule	Source	Carrier/Locality	Contracted Rate
CMS Clinical Laboratory Fee Schedule	www.cms.gov	04412/99	50%
CMS DMEPOS Fee Schedule	www.cms.gov	TX	50%
CMS Medicare Part B Drug Average Sales Price	www.cms.gov	N/A	100%
CMS RBRVS (PT/OT/ST Services)	www.cms.gov	04412/99	70%
CMS RBRVS (Radiology Services)	www.cms.gov	04412/99	70%
CMS RBRVS	www.cms.gov	04412/99	100%
MCO Gap Fill Schedule	www.superiorhealthplan.com	N/A	100%

Anesthesia Contracted Providers. The maximum compensation for anesthesia Covered Services rendered to a Covered Person shall be the "Allowed Amount." Except as otherwise provided in this Compensation Schedule, the Allowed Amount for anesthesia Covered Services is the anesthesia conversion factor for physician and CRNA services which is based on an anesthesia time unit value of 15 minutes and set at a conversion factor of $65.00 per unit and will be calculated in accordance with the American Society of Anesthesiologists ("ASA") Coding and Billing Policy. Payment of Anesthesia/CRNA services for obstetrics will be subject to the following cap limits: Labor & Vaginal Delivery 26 units or $1,690 and Labor & C-Section Delivery 31 units or $2,015.

Default. If there is no established payment amount set forth above in Table 1 or in the "Anesthesia Contracted Providers" subsection above, for a Covered Service provided to a Covered Person, Payor may establish a payment amount to apply in determining the Allowed Amount. Until such time as Payor establishes such a payment amount, the maximum compensation shall be 30% of Allowable Charges.

Therapy Assistants. The maximum compensation for therapy assistant Covered Services rendered to a Covered Person shall be the "Allowed Amount." Except as otherwise provided in this Compensation Schedule, the Allowed Amount for therapy assistant Covered Services is 70% of the applicable professional "Contracted Rate" set forth above in Table 1 for like services rendered by a licensed Physical Therapy, Occupational Therapy or Speech Therapy Provider(s).

Mid-Level Behavioral Health Professionals. The maximum compensation for mid-level behavioral health professional Covered Services rendered to a Covered Person shall be the "Allowed Amount." Except as otherwise provided in this Compensation Schedule, the Allowed Amount for Covered Services provided by a Licensed Professional Counselor (LPC), a Licensed Clinical Social Worker (LCSW), or a Licensed Marriage and Family Therapist (LMFT), in compliance with applicable professional licensing laws and regulations, is 85% of the applicable professional "Contracted Rate" set forth above in Table 1 for like services rendered by a Psychiatrist and Psychologists.

Mid-Level Medical Health Professionals. The maximum compensation for mid-level medical professional Covered Services rendered to a Covered Person shall be the "Allowed Amount." Except as otherwise provided in this Compensation Schedule, the Allowed Amount for Covered Services provided by a Physician Assistant (PA), Nurse Practitioner (NP) or Clinical Nurse Specialist (CNS), in compliance with applicable professional licensing laws and regulations, is 85% of the applicable professional "Contracted Rate" set forth above in Table 1 for like services rendered by a Physician (M.D. or D.O.).

Additional Provisions:

1. Therapy Services. Therapy services include any durable medical equipment or medical supplies billed by Provider and/or Contracted Provider.

2. Code Change Updates. Payor utilizes nationally recognized coding structures (including, without limitation, revenue codes, CPT codes, HCPCS codes, ICD codes, national drug codes, ASA relative values, etc., or their successors) for basic coding and descriptions of the services rendered. Updates to billing-related codes shall become effective on the date ("Code Change Effective Date") that is the later of: (i) the first day of the month following sixty (60) days after publication by the governmental agency having authority over the applicable Product of such governmental agency's acceptance of such code updates, (ii) the effective date of such code updates as determined by such governmental agency or (iii) if a date is not established by such governmental agency or the applicable Product is not regulated by such governmental agency, the date that changes are made to nationally recognized codes. Such updates may include changes to service groupings. Claims processed prior to the Code Change Effective Date shall not be reprocessed to reflect any such code updates.

3. Fee Change Updates. Updates to the fee schedule shall become effective on the effective date of such fee schedule updates, as determined by the Payor ("Fee Change Effective Date"). The date of implementation of any fee schedule updates, i.e. the date on which such fee change is first used for reimbursement ("Fee Change Implementation Date"), shall be the later of: (i) the first date on which Payor is reasonably able to implement the update in the claims payment system; or (ii) the Fee Change Effective Date. Claims processed prior to the Fee Change Implementation Date shall not be reprocessed to reflect any updates to such fee schedule, even if service was provided after the Fee Change Effective Date.

4. Payment under this Compensation Schedule. All payments under this Compensation Schedule are subject to the terms and conditions set forth in the Agreement, the Provider Manual and any applicable billing manual.

Definitions:

1. **Allowed Amount** means the amount designated in this Compensation Schedule as the maximum amount payable to a Contracted Provider for any particular Covered Service provided to any particular Covered Person, pursuant to this Agreement or its Attachments.

2. **Allowable Charges** means a Contracted Provider's billed charges for services that qualify as Covered Services.

3. **Cost-Sharing Amounts** means any amounts payable by a Covered Person, such as copayments, cost-sharing, coinsurance, deductibles or other amounts that are the Covered Person's financial responsibility under the applicable Coverage Agreement, if applicable.

SIGNED AND EXECUTED this _____ day of _____, 2025.

COUNTY OF TARRANT
STATE OF TEXAS

By: Separate Electronic Signature Page
Tim O'Hare
County Judge

APPROVED AS TO FORM:

Kimberly Colliet Wesley
Criminal District Attorney's Office*

*By law, the Criminal District Attorney's Office may only approve contracts for its clients. We reviewed this document as to form from our client's legal perspective. Other parties may not rely on this approval. Instead, those parties should seek contract review from independent counsel.

TARRANT COUNTY
COMMISSIONERS COURT COMMUNICATION

Court Date: December 9, 2025	**Court Order #:**	**Page:** 1 of 51
Department: Public Health	**Prepared By:** Gary Collins, Contracts Specialist	**Approved By:** Amanda Campbell

SUBJECT:

Consideration of a Participating Provider Agreement with Oscar Insurance Company and its Affiliates and Third-Party Administrator for Reimbursement of Eligible Clinical Health Care Services Provided by Tarrant County Public Health

*****CONSENT AGENDA *****

COMMISSIONERS COURT ACTION REQUESTED

It is requested that the Commissioners Court consider a Provider Participation Agreement with Oscar Insurance Company, and its Affiliates and its third-party administrator Oscar Management Corporation, to allow Tarrant County Public Health (TCPH) to enroll as a provider, accept the Oscar Insurance Company benefit plan and receive reimbursement for eligible clinical health care services provided to TCPH clients.

BACKGROUND

TCPH provides clinical health care services to the residents of Tarrant County through various clinics and programs. To better serve patients and enhance billing options, TCPH continues to pursue enrollment and participation with both commercial and state health plans.

The proposed Participating Provider Agreement will authorize TCPH to bill and receive reimbursement for eligible clinical health care services provided to clients insured by Oscar Insurance Company and its Affiliates, and its third-party administrator, Oscar Management Corporation. This expands the insurance plans accepted by TCPH and supports continued access to care for clients.

The initial term of the agreement will begin January 1, 2026, for a period of three (3) years, and will automatically renew for successive one (1)-year terms unless either party provides at least nine months (9) months written notice of non-renewal. All other terms and conditions not amended will remain in full force and effect.

The Criminal District Attorney's Office has reviewed and approved this agreement as to form.

FISCAL IMPACT

All associated reimbursements will be deposited in the T0400-2026 Public Health / 5100011000 Public Health / 428054 Health Private Ins.

PASSED AND APPROVED on December 9, 2025.

COUNTY OF TARRANT
STATE OF TEXAS

By: Separate Electronic Signature Page
Tim O'Hare
County Judge

APPROVED AS TO FORM:

_____
District Attorney's Office*

*By law, the District Attorney's Office may only approve contracts for its clients. We reviewed this document as to form from our client's legal perspective. Other parties may not rely on this approval. Instead, those parties should seek contract review from independent counsel.

Attachments

Contract_Oscar_Tarrant County Public Health - Provider Agreement.pdf

Dear **Tarrant County Public Health**,

We think health insurance should be smart, simple, and friendly. That's why we built Oscar. Our goal is to change the way providers and consumers interact with healthcare through technology, data, and design.

We invite you to join our Provider Network, and help us continue making a healthier life **accessible and affordable for all**. Oscar is the first health insurance company built around a robust technology platform with a relentless focus on serving our members - and none of this would be possible without you, our Valued Community Providers. We are outreaching to request your participation in our network of more than **600,000** providers.

To participate in Oscar's 2026 Network please review, complete, and sign the attached agreement or request a DocuSign copy of the agreement, by June 1, 2025, or reply to providercontracting@hioscar.com as soon as possible for assistance!

Please follow the instructions below to review, complete and sign the agreement, and provide the necessary attachments by Email or Mail:

1. Using the attached PDF, complete the following sections of the Provider Participation Agreement:
    a. Group legal entity name on pages 1 and 2
    b. Notice Information in Section 12.12
    c. Provider Signature block on page 23
    d. Participating Provider Entity table in Exhibit 3.1
    e. Review Schedule of Programs Exhibit 4.2
2. Supply a signed and dated copy of the W9 (must match the business entity on the contract)
3. Submit a copy of your roster by following the instructions on the Roster Guide and by filling out the roster template attached

Email: providercontracting@hioscar.com
Mail: ATTN: Provider Network Management
75 Varick St
5th Floor
New York, NY 10013

Want to learn more about Oscar's Provider Experience or have any questions?
Visit hioscar.com/providers.

Sincerely,
The Oscar Provider Network Management Team

ECP Mailer ID: TX-010344

PROVIDER PARTICIPATION AGREEMENT
BETWEEN OSCAR AND Tarrant County

TABLE OF CONTENTS

1. Definitions
2. Oscar Obligations
3. Provider, Provider Entities and Employed Professionals
4. Provider Obligations for the Provision of Provider Services
5. Financial Considerations
6. Records Maintenance and Access
7. Compliance with Laws
8. Confidentiality
9. Insurance and Indemnification
10. Term and Termination
11. Dispute Resolution
12. Miscellaneous

EXHIBITS

Exhibit 3.1	Provider, Provider Entities and Employed Professionals
Exhibit 4.2	Schedule of Programs
Exhibit 4.3	Covered Services Excluded from this Agreement
Exhibit 5.1	Compensation for Provider Services
Exhibit 5.1.2	Quality Incentive Programs
Exhibit 7.3	State Requirements
Exhibit 7.3E	Qualified Health Plan Requirements
Exhibit 7.4	Medicare Advantage Requirements

THIS AGREEMENT CONTAINS TRADE SECRETS CONFIDENTIAL AND PROPRIETARY TO OSCAR

PROVIDER PARTICIPATION AGREEMENT

This Provider Participation Agreement (the "Agreement") is made and entered into as of the Effective Date, by and between Oscar Insurance Company on behalf of itself and its insurance Affiliates, and its third party administrator Oscar Management Corporation ("Oscar") and Tarrant County, including its Employed Professionals and Affiliates (collectively, "Provider"), each individually a "Party" and, together, "Parties."

WHEREAS, Oscar is licensed pursuant to applicable State law to offer health insurance;

WHEREAS, Oscar enters into contracts with individuals, employer groups and other group purchasers under which Oscar agrees to provide or Covered Services to Members;

WHEREAS, Provider desires to participate in Oscar's network of Participating Providers by providing or arranging for Provider Services to Members; and

WHEREAS, this Agreement and its exhibits set forth the obligations of both Parties related to Provider's provision of Provider Services.

NOW THEREFORE, in consideration of the foregoing and incorporating the above recitals and for other good and valuable consideration, the undersigned Parties hereto agree the definitions, mutual covenants and promises contained in this Agreement.

1. DEFINITIONS

The following terms shall have the following definitions. Terms used in this Agreement which are defined by Law shall be interpreted consistent with such Laws.

1.1. "Affiliate" means an entity controlled by, controlling, or under common control with another entity, including through ownership of stock, joint venture, or membership interest.

1.2. "Authorization/Authorized" means approval pursuant to Oscar's Utilization Review program for the provision of Covered Services.

1.3. "Benefit Plan" means a health benefit policy, contract or coverage document issued by Oscar pursuant to a Program. Benefit Plans are subject to change periodically.

1.4. "Care Management" means services provided by Oscar or a delegate, including, but not limited to population health services, case management, on-site reviews and quality improvement initiatives.

1.5. "Clean Claim" means a claim for payment for Covered Services rendered by Provider that has no defect or impropriety, lack of information, lack of required substantiating documentation (including the substantiating documentation needed to meet the requirements for encounter data) or particular circumstances requiring special treatment that prevents Oscar's timely adjudication of the claim.

THIS AGREEMENT CONTAINS TRADE SECRETS CONFIDENTIAL AND PROPRIETARY TO OSCAR

1.6."Covered Services" means those Medically Necessary health care services covered under the terms of a Member's Benefit Plan and subject to each Benefit Plan's limitations and exclusions.

1.7."Effective Date" is August 1, 2025.

1.8."Emergency or Emergency Services" means health care services provided in a hospital emergency facility, emergency medical care facility, or comparable emergency facility to evaluate and stabilize a medical condition of a recent onset and severity, including severe pain, that would lead a prudent layperson possessing an average knowledge of medicine and health to believe that the person's condition, sickness, or injury is of such a nature that failure to get immediate medical care could result in: (1) placing the patient's health in serious jeopardy; (2) serious impairment to bodily functions; (3) serious dysfunction of a bodily organ or part; (4) serious disfigurement; (5) in the case of a pregnant woman, serious jeopardy to the health of the woman or the fetus; or (6) in the case of a behavioral condition, placing the health or life of the person or others in serious jeopardy.

1.9."Employed Professionals" mean the health care providers, including physicians, nurse practitioners, and physician's assistants, who are Provider's or Provider Entities' full or part-time employees providing health care services to patients of Provider. Provider agrees that all Employed Professionals for which Provider or Provider Entities will submit claims to Oscar for reimbursement of Providers Services are Participating Providers under this Agreement.

1.10. "Facility Based Providers" means health care providers which provide health care services to Provider's patients at Provider's locations, but which are not Provider Entities or Employed Professionals.

1.11. "Law" means any statute, code, regulation, rule, court order or mandate, or sub-regulatory guidance issued by a federal, state or local governmental authority which has jurisdiction over this Agreement.

1.12. "Medically Necessary/Medical Necessity" means services, procedures, treatments, supplies, devices, equipment, or drugs that a health care provider, exercising prudent clinical judgment, would provide to a Member for the purpose of preventing, evaluating, diagnosing or treating an illness, injury, or disease or its symptoms, and that are (i) in accordance with generally accepted standards of medical practice; (ii) clinically appropriate in terms of type, frequency, extent, site and duration and considered effective for the Member's illness, injury or disease; (iii) not primarily for the convenience of the Member, physician or other health care provider; and (iv) at the most appropriate level of care, depending on the Member's medical condition; and (v) not investigational or experimental. For purposes of this definition, "generally accepted standards of medical practice" means standards that are based on credible scientific evidence published in peer-reviewed medical literature generally recognized by the relevant medical community, national physician specialty society recommendations and the views of medical practitioners practicing in relevant clinical areas and any other relevant factors. A determination that a service is Medically Necessary does not however mean that a particular service is a Covered Service if the service is otherwise excluded under the Member's Benefit Plan.

1.13. "Member" means an individual enrolled in a Benefit Plan as of the date the Covered Services are provided.

THIS AGREEMENT CONTAINS TRADE SECRETS CONFIDENTIAL AND PROPRIETARY TO OSCAR

1.14. "Member Responsibility" means an amount that a Member is obligated to pay directly to a Participating Provider pursuant to the Member's Benefit Plan including, but not be limited to, coinsurance, copayments and/or deductibles.

1.15. "Participating Provider" means Provider, Provider Entities, Employed Professionals, Facility Based Providers and any other health care facility, physician, or other health care provider which has contracted with, or on whose behalf a contract has been entered with, Oscar to provide Covered Services.

1.16. "Program" means a commercial, federal or employer self-insured health care plan which Oscar offers or administers.

1.17. "Provider Entities" means the Provider's Affiliates, such as ambulatory surgery centers, physician groups, home health agencies, professional corporations and skilled nursing facilities, which provide health care services to Provider's patients. Provider agrees that all Provider Entities set forth in Exhibit 3.1 are Participating Providers under this Agreement. Other Provider Entities may be Participating Providers in one or more separate participation agreement as agreed to by Oscar and Provider.

1.18. "Provider Manual" means the documents maintained by Oscar setting forth Oscar's requirements for Participating Providers which includes, but is not limited to Oscar's reimbursement policies and clinical guidelines. Provider will comply with the Provider Manuals and requirements applicable to Provider and Provider Services. The Provider Manual is incorporated into and made a part of this Agreement. Oscar will provide no less than thirty (30) days prior written notice of material changes to the Provider Manual unless applicable Law requires a different notice period. The Parties agree that changes to the Provider Manual necessary comply with Laws do not require thirty (30) days prior notice and shall be effective as stated in such notice.

1.19. "Provider Services" means those Covered Services which Provider is licensed or certified to render to Members and which Provider will provide pursuant to this Agreement. Provider Services does not include the Covered Services which are excluded from this Agreement and set forth in Exhibit 4.3.

1.20. "Risk Adjustment" means the process by which Oscar collects diagnosis codes and other risk adjustment data regarding Members from acceptable data sources, including but not limited to health records maintained by Provider, to ensure the accuracy and integrity of risk adjustment data submitted to CMS.

1.21. "State" means the State of Texas.

1.22. "Utilization Review" means the process by which Oscar, or its third-party vendor, determines the Medical Necessity of Covered Services, including Provider Services.

2. OSCAR OBLIGATIONS

THIS AGREEMENT CONTAINS TRADE SECRETS CONFIDENTIAL AND PROPRIETARY TO OSCAR

2.1.Claims Adjudication and Payment. Oscar will reimburse Provider for Provider Services rendered to Members in accordance with applicable Law, the terms of the Provider Manual, the applicable Benefit Plan and this Agreement.

2.2.Member Identification. Oscar will issue identification cards identifying Members and stating the Member's name, an identification number and any other information, as required by the applicable Benefit Plan and Law.

2.3.Eligibility and Benefit Determinations. Oscar will provide Members with information regarding benefit determinations, eligibility, bills and other matters relating to their status as Members. Oscar will maintain a telephone and/or website that enables Participating Providers to confirm Member eligibility.

2.4.Authorization and Utilization Review. Oscar will perform, or have a third party vendor perform on Oscar's behalf, Utilization Review in accordance with Law and the applicable Benefit Plan. Oscar will not rescind any Authorization once issued unless such Authorization was based on a material misrepresentation or omission of clinical information by Provider, a Provider Entity or an Employed Professional.

2.5.Care Management. Oscar will perform, or have a third party vendor perform on Oscar's behalf, Care Management in accordance with Law and the applicable Benefit Plan.

2.6.Quality Improvement. Oscar will maintain various programs designed to improve (i) the quality of care, including but not limited the quality of Provider Services, rendered to Members and (ii) Member satisfaction with Oscar and its Participating Providers.

2.7.Provider Directory. Oscar may, in its discretion, use information pertaining to Provider, Provider Entities and its Employed Professionals (including name, logo, address and telephone number) in Oscar's directory of Participating Providers.

3. PROVIDER, PROVIDER ENTITIES AND EMPLOYED PROFESSIONALS

3.1.Provider and Provider Entities Subject to this Agreement. This Agreement applies to Provider and its Provider Entities set forth in Exhibit 3.1. Provider represents and warrants that the Provider Entities listed in Exhibit 3.1 reflect all Provider Entities covered under this Agreement. In the event that an Provider Entities not set forth in Exhibit 3.1 provides Covered Services to a Member, neither Provider nor the Provider Entities will bill or seek compensation from Oscar or any Member. Provider will require all Provider Entities and Employed Professionals to comply with the terms and conditions of this Agreement as applicable to each.

3.2.Change in Provider Entities.

3.2.1. Notice to Oscar. Provider will notify Oscar of any change in Provider Entities, including the creation or acquisition of new Provider Entities, sale of existing Provider Entities and Provider Entities which cease operations. Provider will provide such notice to Oscar no later than thirty (30) days before such change. In the event that Provider fails to provide Oscar with notice of any new Provider Entities, neither Provider nor such Provider Entities will bill or seek compensation from Oscar or the Member if the Provider Entities

THIS AGREEMENT CONTAINS TRADE SECRETS CONFIDENTIAL AND PROPRIETARY TO OSCAR

provides Covered Services to a Member. Provider shall indemnify Oscar for any regulatory fines related to the Provider's breach of this section in failing to update those Provider Entities listed in Exhibit 3.1.

3.2.2. New Provider Entities. Oscar will determine the participation status of each new Provider Entities, including whether the new Provider Entities will (i) be subject to this Agreement and listed in Exhibit 3.1; (ii) be subject to a separate Participating Provider agreement between such Provider Entities and Oscar or (iii) will not become a Participating Provider. If the new Provider Entities is already a Participating Provider through another agreement, Oscar will choose whether this Agreement or the other agreement will apply to Covered Services provided to Members.

3.2.3. Provider Entities Which Cease Operations. Provider will provide not less than ninety (90) days prior written notice of any Provider Entities which ceases operations or is no longer an Affiliate of Provider. If such notice is not possible, Provider will provide notice as soon as is reasonably possible. Any such Provider Entities shall continue to provide Provider Services pursuant to the continuation of care provisions set forth in Section 10.4 of this Agreement.

3.3.Change in Control. If Provider or any Provider Entities undergoes a change in control through merger, acquisition, consolidation, or other transaction or series of transactions which results in Provider or any Provider Entities being merged into, acquired by or coming under common control of another entity (a "Transaction Event") with whom Oscar has a Participating Provider agreement, Oscar will determine, in its sole discretion, whether Provider and Provider Entities will provide Covered Services under this Agreement or the other Participating Provider Agreement. For purposes of this Section 3.3, "control" means the possession, direct or indirect, of the power to direct or cause the direction of the management and policies of a person or entity, whether through the ownership of voting securities, by contract, or otherwise. Provider may not terminate or non-renew this Agreement for twelve (12) months subsequent to the effective date of any Transaction Event.

3.4.Facility Based Providers. If a Facility Based Provider is not a Participating Provider, Provider will use best efforts to assist Oscar in obtaining a Participating Provider agreement with the Facility Based Provider prior to the Facility Based Provider providing Covered Services to Members. If Oscar is unable to negotiate a Participating Provider agreement with a Facility Based Provider, Provider agrees to meet with Oscar in good faith to discuss potential resolution.

3.5.Provider, Provider Entities and Employed Professional Information. Provider agrees to provide Oscar with information regarding Provider, Provider Entities and Employed Professionals as reasonably required by Oscar for the administration of this Agreement and Benefit Plans and as set forth in the Provider Manual. Provider will provide such information in Oscar's standard format i) at least thirty (30) days prior to any change in information; ii) within thirty (30) days of Oscar's request; and iii) on a monthly basis during the term of this Agreement. Provider agrees that failure to provide such information may result in the removal of Provider, Provider Entities and Employed Professionals from Oscar's directory of Participating Providers.

3.6.Service Changes/Site of Service Reclassification. Provider will provide no less than ninety (90) days prior written notice for any change, expansion or reduction in services, or site of service reclassification. If such change occurs and (i) services are added that are Provider Services and/or (ii) a site of service covered

THIS AGREEMENT CONTAINS TRADE SECRETS CONFIDENTIAL AND PROPRIETARY TO OSCAR

under this Agreement is reclassified, Provider will work with Oscar to preserve revenue neutrality if such change in service would result in higher costs to Oscar. For new services that are Provider Services where specific rates are not set forth in Exhibit 5.1, Provider agrees to negotiate such rate with Oscar before providing such Provider Services.

3.7. Credentialing.

3.7.1. Oscar Credentialing. All Provider Entities and Employed Professionals must meet Oscar's credentialing criteria ("Credentialing Requirements") applicable to each subject to Laws and Program requirements. Provider will require Provider Entities and Employed Professionals to consent to and cooperate with the Credentialing Requirements, which may include site reviews. Upon request and at no cost to Oscar, Provider and Employed Professionals shall provide Oscar, or its designee, all information necessary to ensure compliance with the Credentialing Requirements. Provider Entities and Employed Professionals which do not meet the Credentialing Requirements are not Participating Providers under this Agreement. Neither Provider nor any Provider Entities will bill or seek compensation from Oscar or any Member for Covered Services rendered to Members by a Provider Entity or Employed Professional which does not meet the Credentialing Requirements.

3.7.2. Credentialing of Provider and Employed Professionals. If applicable to Provider, Provider will maintain a credentialing program for all Employed Professionals which complies with applicable Laws and national standards, including those established by NCQA.

3.7.3. Material Change in Status of Provider, Provider Entities and Employed Professionals. In addition to any other notices required under this Agreement, Provider will immediately notify Oscar of the occurrence of any event that could reasonably be expected to impair the ability of Provider, any Provider Entities or any Employed Professional to comply with the obligations of this Agreement, including any of the following: (i) an occurrence that causes a breach of any of Provider's representations or warranties in this Agreement; (ii) Provider's failure to maintain insurance as required by this Agreement; (iii) an Employed Professional's license, certification or accreditation expires or is suspended, revoked, conditioned or otherwise restricted; (iv) a disciplinary or regulatory action is initiated by the State or any government authority against Provider, Provider Entities or any Employed Professional; (v) a grievance or legal action relating to Provider, any Provider Entities or any Employed Professional is filed by a Member; (vi) Provider, Provider Entities or an Employed Professional is under investigation for suspected fraud or a felony; or (vii) Provider, Provider Entities or an Employed Professional enters into a settlement related to any of the foregoing. If Provider discovers that Provider, any Provider Entities or any Employed Professional has already provided services to a Member while in violation of the provisions of this Section, Provider agrees to work with Oscar to resolve any financial, legal or regulatory issues that may arise with regard to the provision of such services after the commencement of such violation (the "Violation Period"), including the repayment to Oscar of any amounts paid to Provider or Professional during such Violation Period and any related fines and penalties.

3.7.4. Delegation of Credentialing to Provider. In the event that Oscar delegates to Provider the credentialing of Provider Entities, Employed Providers, Facility Based Providers and other Participating Providers, the Parties shall execute a separate delegated credentialing agreement. Any such delegation shall not

THIS AGREEMENT CONTAINS TRADE SECRETS CONFIDENTIAL AND PROPRIETARY TO OSCAR

relieve Provider, Provider Entities and Employed Professionals from their obligations under Sections 3.7.1 through 3.7.3 above.

3.7.5. Staff Privileges. If Provider requires health care providers to maintain admitting privileges in order to practice at Provider facilities, then in the event that Oscar reasonably requests that a Participating Provider other than an Employed Professional be credentialed by and granted clinical privileges at Provider, Provider will not unreasonably deny such privileges, provided that such Participating Providers meet the reasonable standards of practice and credentialing established by Provider medical staff and the bylaws, rules, and regulations of Provider.

3.8. Provider Representations and Warranties.

3.8.1. Provider represents and warrants, for itself and for each Provider Entities as applicable, that Provider and the applicable Provider Entities:

3.8.1.1. is duly licensed and qualified to provide Provider Services;

3.8.1.2. provides Provider Services in compliance with all applicable Laws and professional standards of care;

3.8.1.3. has not (i) been terminated, suspended, excluded, barred, voluntarily withdrawn as part of a settlement agreement, from participation in Medicare or any other federal health care program or (ii) not opted out of participation in the Medicare program;

3.8.1.4. complies with all Laws related to Stark physician self-referral prohibitions set forth at 42 U.S.C. § 1395nn and anti-kickback provisions set forth at 42 USC Section 1320a-7b(b).

Provider will provide Oscar (or its designee) all information necessary to ensure compliance with the above representations and warranties at no cost.

4. PROVIDER'S OBLIGATIONS FOR THE PROVISION OF PROVIDER SERVICES

4.1. Provider Services. Provider will render, and will require Provider Entities and Employed Professionals to render, Provider Services (i) pursuant to this Agreement, the applicable Benefit Plans and the Provider Manual; (ii) consistent with Provider's, Provider Entities and Employed Professionals licenses, qualifications, training and experience and (iii) within the professional standards of practice for care generally recognized within the health care community in which Provider operates.

4.2. Schedule of Programs. Provider will participate in the Programs set forth in Exhibit 4.2.

4.3. Covered Services Excluded From this Agreement. A list of Covered Services which are not Provider Services and are carved-out from this Agreement is set forth in Exhibit 4.3. Exhibit 4.3 may be updated by

THIS AGREEMENT CONTAINS TRADE SECRETS CONFIDENTIAL AND PROPRIETARY TO OSCAR

Oscar upon reasonable prior notice to Provider. Oscar shall reasonably assist Provider in entering into a written agreement with any third parties which provide the Covered Services set forth in Exhibit 4.3.

4.4.Responsibility for Provider Services. Provider, Provider Entities and Employed Professionals will exercise independent judgment and be responsible for the provision of Provider Services to Members. Provider understands that Oscar's determinations, if any, to deny payments for (i) health care services which Oscar determines are not Covered Services or (ii) Provider Services which were not Authorized or provided in accordance with the requirements of this Agreement, in no way limit, restrict or relieve Provider of its responsibilities as a health care provider rendering health care services to Provider's patients.

4.5.Accessibility.

4.5.1. Provider, Provider Entities and Employed Professionals will provide Provider Services to Members twenty-four (24) hours a day, seven (7) days a week where applicable to the particular Provider Service.

4.5.2. Provider, Provider Entities and Employed Professionals will provide sixty (60) days' notice to Oscar prior to closing any panels to Members. Provider and Employed Professionals must provide notice within forty-eight (48) hours of opening panels.

4.6.Determination of Member Eligibility. Provider, Provider Entities and Employed Professionals will verify that a patient seeking Provider Services is a Member in accordance with the procedures specified in the Provider Manual. If Oscar determines, subsequent to Provider Services being rendered, that such person was not a Member on the date of service, Oscar shall make best efforts to promptly notify Provider and will be permitted to recover payment made by Oscar pursuant to Section 5.8 of this Agreement.

4.7.Member Protections and Non-Discrimination.

4.7.1. Protection of Members from Out of Network Charges. Provider agrees to refer Members for Covered Services only to Participating Providers, except as Authorized by Oscar. All referrals will be made in accordance with the provisions of this Agreement and the Provider Manual. Notwithstanding the foregoing, Emergency Services do not require referrals or Authorization from Oscar.

4.7.2. Member Non-Discrimination. Provider agrees that Provider, Provider Entities and Employed Professionals will render Provider Services to Members in the same manner that Provider provides health care services to other patients of Provider. Provider, Provider Entities and Employed Professionals will not discriminate in the performance of its obligations under this Agreement based on a Member's race, color, national origin, sex, sexual orientation, age, religion, place of residence, health status, disability-status, type of Benefit Plan, or source of payment, and agrees to observe, protect and promote the rights of Members as patients as is done for all Provider's patients. Provider, Provider Entities and Employed Professionals may not impose any limitations or requirements on Members that it does not impose on other patients of Provider. Provider will not discriminate against any patient, with regard to quality of service or accessibility of services, on the basis that the patient is a Member.

THIS AGREEMENT CONTAINS TRADE SECRETS CONFIDENTIAL AND PROPRIETARY TO OSCAR

4.8. Authorization. Except for Emergency Services, Provider, Provider Entities and Employed Professionals must seek Authorization from Oscar or its delegate prior to providing Covered Services to Members to the extent required by, and in accordance with, the terms of the Provider Manual. Subject to applicable Laws, Provider will provide to Oscar or its third-party vendor, copies of health records or access to electronic health records and other information as reasonably required by Oscar, and according to timeframes set by Oscar, determine Medical Necessity and issue Authorizations. Provider will provide such health records and information at no charge to Oscar. Provider's failure to obtain Authorization may result in reduced reimbursement by Oscar.

4.9. Care Management and Clinical Programs.

4.9.1. Care Management. Provider will participate in Care Management programs established by Oscar. Oscar may use Provider, Provider Entity and Employed Professional performance data for Care Management. Further, Provider agrees to participate in government and/or accreditation entity programs that require Provider to participate and/or provide applicable data or other information (e.g., HEDIS, NCQA, CMS programs). Subject to applicable Laws, Provider will provide to Oscar or its designee, copies of health records or access to electronic health records and other information as reasonably required by Oscar, and according to timeframes set by Oscar, to issue Authorizations, determine Medical Necessity and administer clinical programs as set forth in this Section 4.8. Provider will provide such health records and information at no charge to Oscar.

4.9.2. Quality Improvement. Provider will participate in and cooperate with Oscar programs related to quality of care, including but not limited to the quality of Provider Services rendered to Members. This shall include participation in Oscar's provider engagement initiatives, at Oscar's discretion, unless opted-out by Provider.

4.10. Risk Adjustment. Provider will provide copies of Member health records, or access to Provider's electronic health record, as well as supplemental data regarding Members as required by Oscar for Risk Adjustment.

4.11. Provider Inpatient Admissions and Discharge Planning. If Provider or any Provider Entities provides Provider Services which are inpatient acute care services, each Provider and each Provider Entities providing such Provider Services shall comply with the requirements of this Section 4.9.

4.11.1. Provider agrees to admit Members to Provider: (i) upon the orders of a Participating Provider; (ii) if a Member requires inpatient services after Emergency Services; or (iii) as requested by Oscar.

4.11.2. For scheduled inpatient admissions, Provider will notify Oscar at least seventy-two (72) hours prior to the admission.

4.11.3. If an inpatient admission is the result of an Emergency, Provider will notify Oscar within twenty-four (24) hours.

THIS AGREEMENT CONTAINS TRADE SECRETS CONFIDENTIAL AND PROPRIETARY TO OSCAR

4.11.4. Emergency Services. Provider will meet all legal obligations with respect to the provision of Emergency Services, and shall use best efforts to obtain verification of eligibility prior to rendering Provider Services. Provider will notify Oscar within twenty-four (24) hours of rendering or learning of the rendering of Emergency Services to a Member.

4.11.5. Discharge Planning. Provider, in collaboration with Participating Providers and Oscar's Care Management staff, will utilize a system for the coordinated discharge planning of Members, including the planning of such continuing care as may be necessary.

4.12. Member Communications. Provider, Provider Entities and Employed Professionals may communicate freely with Members about all treatment options, regardless of Benefit Plan limitations, send mailings to Members regarding health status, medical care, or treatment options. However, Provider, Provider Entities and Employed Professionals will not directly or indirectly engage in conduct intended to persuade a Member to disenroll from any Benefit Plan or discontinue a Member's relationship with Oscar.

4.13. Marketing. Provider will provide comparable treatment to Oscar as to any other payor with respect to listings, marketing or the display of cards, plaques or other logos, including any online or other electronic or digital media to identify Provider's participation status. Provider agrees that Oscar may use Provider, Provider Entities and Employed Professionals' information (e.g., name, logo, address and telephone number) in Oscar's marketing, informational, and educational materials. Provider also agrees to provide Oscar with the most-current information, any requested assets for marketing purposes (such as high-resolution logos and brand guidelines), and any updates thereto. Provider and Employed Professionals agree to allow Oscar to distribute a public announcement of Provider and Employed Professionals' affiliation with Oscar.

4.14. Account Representative. Provider will appoint an account representative to facilitate communication between Oscar and Provider. Such account representative shall provide timely responses to requests by Oscar, including with regard to resolving issues related to performance under this Agreement and advertising/marketing requests.

5. FINANCIAL CONSIDERATIONS

5.1. Compensation.

5.1.1. Compensation for Provider Services.

5.1.1.1. Oscar will reimburse Provider and Provider Entities the amounts set forth in Exhibit 5.1, less any applicable Member Responsibility for Provider Services rendered to Members. Oscar will not reimburse Employed Professionals directly. Provider acknowledges that compensation of Employed Professionals is the sole responsibility of Provider or the applicable Provider Entities. Provider and Provider Entities will accept the amounts set forth in Exhibit 5.1 plus any Member Responsibility as payment in full for providing Provider Services to Members. The Parties agree that such compensation is not designed to directly or indirectly provide incentives to Provider, Provider Entities or Employed Professionals to deny, limit or discontinue Medically Necessary Provider Services to any Member.

THIS AGREEMENT CONTAINS TRADE SECRETS CONFIDENTIAL AND PROPRIETARY TO OSCAR

5.1.1.2. Compensation by Oscar Affiliates. In the event that Provider (i) renders services to an individual enrolled with an Affiliate of Oscar and (ii) Oscar is required by Law to compensate Provider for such services or Oscar has authorized such services, Provider agrees to accept the lesser of Provider's Billed Charges or the amount set forth in Exhibit 5.1. The terms if this Section 5.1.1.2 will not apply to any individual enrolled in a Medicare Advantage plan offered by an Affiliate of Oscar.

5.1.2. Quality Incentive Programs. Oscar may also compensate Provider pursuant to one or more quality incentive programs as set forth in Exhibit 5.1.2. Oscar will determine, in its sole discretion which quality incentive programs Provider will participate in from time to time.

5.2.Claims Submission. Unless otherwise required by applicable Law, Provider will submit Clean Claims to Oscar within one hundred and twenty (120) days of rendering Provider Services, or, in the event of coordination of benefits, within one hundred and twenty (120) days of receipt of an explanation of benefits from a primary payor. If additional information is required to process a claim, such claim shall not be considered a Clean Claim and Provider will provide additional information requested by Oscar within thirty (30) days of Oscar's request. Provider will submit Clean Claims electronically and in compliance with the terms of the Provider Manual. Clean Claims that are submitted in a manner that is inconsistent with the applicable provisions set forth in this Agreement and the Provider Manual may be denied or reimbursement may be reduced by Oscar consistent with applicable Law.

5.3.Adjudication and Payment of Claims. Oscar will adjudicate claims and reimburse Provider in accordance with the timeframes set forth in the Provider Manual or as otherwise required by Law Provider acknowledges that any claim submitted by Provider which is not paid correctly or timely by Oscar due to Provider's failure to notify Oscar timely of changes to provider or location information as required by Sections 3.5 and 3.6 of this Agreement are not Clean Claims and are not subject to any claim payment penalties and/or interest to the extent permitted by Law. Provider will indemnify Oscar for any penalties or fines imposed on Oscar under applicable Law for failure to maintain accurate provider, location, or other information that are the result of Provider to provide Oscar with timely or accurate information.

5.4.Claims Reviews and Audits. Oscar may review and/or audit any claims submitted by Provider for payment of Provider Services either prior to or after adjudication, including claims which are paid by Oscar, in order to verify the accuracy of claims submitted ("Claims Reviews"). Provider will make available to Oscar, all records and information reasonably by Oscar for Claims Reviews according to timeframes and formats reasonably required by Oscar. Oscar will conduct Claims Reviews as set forth in the Provider Manual, subject to the limitations and requirements of applicable Law.

5.5.Other Agreements. Provider agrees that in the event that Oscar has access to Provider and Provider Entities' services through an arrangement, including but not limited to another Participating Provider agreement, network access agreement or reinsurance contract, other than this Agreement, Oscar will determine under which agreement or arrangement payment will be made.

5.6.Member Hold Harmless. Provider agrees that in no event, including non-payment by Oscar, insolvency of Oscar or breach of this Agreement, will Provider, any Provider Entities or any Employed Professional bill, charge, collect a deposit from, seek compensation, remuneration or reimbursement from, or have any recourse

THIS AGREEMENT CONTAINS TRADE SECRETS CONFIDENTIAL AND PROPRIETARY TO OSCAR

against a Member, or any person acting on behalf of the Member other than Oscar, for Provider Services provided under this Agreement or any Covered Services otherwise provided to Members. Provider's obligations under this Section 5.6 applies in all instances including where Provider believes that Oscar has made an incorrect determination. In such cases, Provider may pursue Provider's remedies under this Agreement against Oscar, but in no event will pursue payment from the Member, or any person acting on behalf of the Member. Provider is responsible for the actions of Provider's agents, including any third party billing service, law firm or collection agency acting on behalf of Provider. Provider will immediately direct such third parties to cease seeking payment from a Member as directed by Oscar. This Section 5.6 will supersede any oral or written agreement now existing or hereafter entered between Provider, any Provider Entities or Employed Professional and a Member, or person acting on behalf of a Member other than Oscar. Provider must refund all amounts incorrectly collected from Members or from others on behalf of the Member. In the event that Provider fails to refund such amounts to a Member, Oscar will recoup payments inappropriately made by a Member from Provider's future claims payments pursuant to Section 5.9.

5.7. Collection of Amounts from Members.

5.7.1. Collection of Member Responsibility. Provider, Provider Entities and Employed Professionals will use best efforts (including making use of all information reasonably available from Oscar) to determine or estimate, in good faith, the amount of Member Responsibility before collection from the Member. In the event Provider, Provider Entities or Employed Professional learns (through receipt of the provider remittance advice, explanation of benefits or otherwise) that it has collected an amount in excess of the applicable Member Responsibility, Provider, Provider Entities or Employed Professional must remit such overpayment to the Member no later than thirty (30) calendar days from the date that Provider, Provider Entities or Employed Professional first learned of such overpayment. If any reduction in, or recoupment of payment to Provider, Provider Entities or Professional by Oscar decreases the applicable Member Responsibility amount, Provider, Provider Entities or Employed Professional shall reimburse the Members for the Member Responsibility within a reasonable timeframe thereafter.

5.7.2. Collection for non-Covered Services. For health care services which are not Covered Services, Provider, Provider Entities and Employed Professionals may bill Members or any other responsible party only if the Provider, Provider Entities or Employed Professional, as applicable, has obtained explicit written consent from the Member or the Member's responsible party. If non-payment for health care services rendered is due to the individual not being an eligible Member, as determined by Oscar, then Provider, Provider Entities or the Employed Professional may bill and collect from the individual.

5.8. Coordination of Benefits, Third Party Liability, Subrogation and Workers' Compensation. Provider will comply with Oscar's coordination of benefits, third party liability subrogation or right of recovery and workers' compensation policies as set forth in the Provider Manual and in accordance with applicable Law.

5.9. Recoupment and Offset. As permitted or required by applicable Law, Oscar will recoup or offset all amounts owed to Oscar due to overpayments or incorrect payments made under this Agreement, including retroactive adjustments to payments to Provider due to errors and omissions relating to data entry, incorrectly submitted claims or applied discounts. Oscar will provide Provider with thirty (30) days prior written notice of such recoupment or offset. Oscar may immediately initiate overpayment recovery efforts if such efforts are

based on the reasonable belief of Provider's (i) fraud or other intentional misconduct or abusive billing or (ii) breach of the Member hold harmless provisions in Section 5.5.

5.10. Financial Responsibility for Acquired Conditions/Never Events.

5.10.1. Acquired Conditions. Provider shall be responsible for all costs related to health care services and Provider Services rendered resulting from Provider's, any Provider Entities or Employed Professional's error(s) or a quality of care issue ("Acquired Conditions"). Provider agrees not to bill Oscar or the Member for any costs incurred in connection with the treatment of Acquired Conditions.

5.10.2. Never Events. Any non-reimbursable, serious hospital-acquired condition ("Never Event") outlined by the National Quality Forum (NQF) that occurs while Provider is providing health care services and/or Provider Services to a Member will be handled as follows:

5.10.2.1. Provider must immediately report the event to Oscar and any applicable regulatory or licensing agency;

5.10.2.2. Provider shall not submit a claim for such services to Oscar and shall not seek or accept payment for such costs from the Member;

5.10.2.3. Provider must perform a root cause analysis, consistent with instructions from the applicable regulatory or licensing agency; and

5.10.2.4. Provider must communicate with and apologize to the Member and/or Member's family affected by the Never Event.

6. RECORDS MAINTENANCE AND ACCESS

6.1.Maintenance of Business Records. Provider will maintain all books, documents, information and records, including financial and accounting records ("Provider Records") regarding the provision of Provider Services and required for the proper administration of this Agreement in accordance with Laws. Provider will maintain Provider Records for periods as is required by applicable Laws, but in no event less than the later of seven (7) years from the date the service was rendered or the termination or expiration of this Agreement.

6.2.Health Records/Advance Directives. Provider will maintain complete and accurate heath care records relating to the Provider Services rendered under this Agreement and will maintain and include in that record all documentation required by applicable Law and the Provider Manual ("Health Records"). Health Records will indicate whether Member has executed an advance directive. Provider shall obtain the consent of any Members, if required by Law, to permit Oscar or its designee, and/or any state or federal agency, to obtain a copy and have access, upon reasonable request, to any Health Record of Member related to Provider Services provided by Provider. Provider will maintain Health Records for periods as is required by applicable Laws, but in no event less than the later of seven (7) years from the date the service was rendered or the termination or expiration of this Agreement. Copies of such Health Records for the purpose of claims processing shall be made and provided Provider at no cost to Oscar or the Member.

THIS AGREEMENT CONTAINS TRADE SECRETS CONFIDENTIAL AND PROPRIETARY TO OSCAR

6.3.Access to Records. Provider will make available to Oscar, and any federal or state agency having jurisdiction over this Agreement, Provider Records and Health Records. Within three (3) business days of Oscar's written request for Provider Records and/or Health Records, or such shorter time period required for Oscar to comply with Law or requests of government agencies having jurisdiction over this Agreement. Provider will compile and prepare all Provider Records and Health Records and make such Provider Records and Health Records available to Oscar in a format reasonably requested by Oscar.
Provider's refusal to grant access to Provider Records and Health Records to Oscar and government agencies having jurisdiction over this Agreement constitutes a material breach of this Agreement subject to termination for cause pursuant to Section 10.2 of this Agreement. In the event of such termination for cause, Provider will not be entitled to any consequential, general, or specific costs, expenses, or damages of any kind. The terms and conditions of this Section 6.3 do not apply to any access to Provider Records and Health Records required by Oscar to (i) review and/or audit claims for payment pursuant to Section 5.4 or (ii) make any determination regarding Medical Necessity.

7. COMPLIANCE WITH LAWS.

7.1.Compliance with Laws Generally. Oscar, Provider, Provider Entities and Employed Professionals will comply with the Laws. Provider will (i) cooperate with Oscar with respect to Oscar's compliance with Laws and the requirements of accrediting bodies and (ii) not knowingly take any action contrary to Oscar's obligations under Laws or the requirements of accrediting bodies.

7.2.Oscar Compliance Plan. Provider will report to Oscar's compliance officer any suspected fraud, waste and abuse or compliance issues relating to this Agreement or the provision of Provider Services to Members. Provider will cooperate with Oscar' compliance officer in regards to any investigation conducted pursuant to Oscar's compliance program regardless of whether the source of the investigation is Provider, a third party or initiated by Oscar. Provider's failure to report or cooperate as set forth in this Section shall be grounds for termination of this Agreement pursuant to Section 10.3. The termination of this Agreement, regardless of cause, will not relieve Provider of its obligations under this Section 7.2.

7.3.State Program Requirements. The Parties will comply with the requirements for Oscar's state plans as set forth in Exhibit 7.3 as applicable to the State and Programs in which Provider participates pursuant to this Agreement. In the event of a conflict between the provisions set forth in Exhibit 7.3 and this Agreement, the requirements in Exhibit 7.3 shall control.

7.4.Medicare Advantage Requirements. In the event that Provider participates in any Program which is a Medicare Advantage plan, Oscar, Provider, Provider Entities and Employed Professionals will comply with the requirements for Oscar's Medicare Advantage plans as set forth in Exhibit 7.4. In the event of a conflict between the provisions set forth in Exhibit 7.4 and this Agreement, the requirements in Exhibit 7.4 shall control.

8. CONFIDENTIALITY.

THIS AGREEMENT CONTAINS TRADE SECRETS CONFIDENTIAL AND PROPRIETARY TO OSCAR

8.1.Confidential Information. In connection with this Agreement, Oscar and Provider will disclose to the other Party, directly or indirectly, certain information that the disclosing Party has taken reasonable measures to maintain as confidential and which derives independent economic value from not being generally known or readily ascertainable by the public ("Confidential Information"). Confidential Information includes Member and patient lists, the compensation rates and related terms of this Agreement, research and development and related strategies, market studies, computer software and programs (including object code and source code), computer software and database technologies, systems, structures and architectures (and related processes, formulae, composition, improvements, devices, inventions, discoveries, concepts, ideas, designs, methods and information and other information relating to Oscar or its Affiliates' business that is not generally available to the public.

8.2.Permitted Disclosures. All Parties will treat Confidential Information as confidential and shall not disclose Confidential Information to any third-party, except (i) as may be necessary to administer the terms of the Agreement or (ii) as required by Law or legal or regulatory process. Each Party shall provide the other Party with prior notice of any such disclosure required by Laws or legal or regulatory process so that other Party can seek an appropriate protective order; provided however, that a Party shall not be required to provide such notice if the Party subject to such disclosure is advised by legal counsel that such notice is not permitted.

8.3.Member Responsibility. The Parties understand and agree that advising Members of their Member Responsibility by Provider, Employed Professionals or Oscar, including Member Responsibility based on compensation paid under this Agreement, does not constitute the disclosure of Confidential Information.

8.4.HIPAA/HITECH Compliance. Each Party represents and warrants to the other party that it will comply with the provisions of the Health Insurance Portability and Accountability Act ("HIPAA"), including the effective dates of regulations adopted to implement HIPAA and the Health Information Technology for Economic and Clinical Health ("HITECH") Act, or other such amendments. The Parties acknowledge, with respect to all protected health information (as that term is defined under the Standards for Privacy of Individually Identifiable Health Information (December 28, 2000; 65 F. Reg. 82462), that each is a covered entity (and not a business associate of the other Party) under the HIPAA Privacy Regulations and that it will protect the privacy, integrity, security, confidentiality and availability of the protected health information disclosed to, used by, or exchanged by the Parties by implementing appropriate privacy and security policies, procedures, and practices and physical and technological safeguards and security mechanisms, all as required by, and set forth more specifically in, the HIPAA Privacy Regulations and the HIPAA Security Regulations. The Parties agree that, upon the request of the other Party, they will provide written verification of compliance with all applicable Laws. If applicable, and where the provider performs administrative duties as part of either its delegated case management, or population health management, Exhibit 8.4 Business Associate Agreement - shall apply to those duties.

9. INSURANCE AND INDEMNIFICATION

9.1.Insurance

THIS AGREEMENT CONTAINS TRADE SECRETS CONFIDENTIAL AND PROPRIETARY TO OSCAR

9.1.1. Oscar Insurance. Oscar, at its sole cost and expense, will procure and maintain such policies of general liability, managed care errors and omissions, cyber-liability/network security and other insurance reasonable and customary for a managed care plan offering the Programs and as may otherwise be required by Law.

9.1.2. Provider Insurance. Provider represents and warrants that it shall, at its sole cost and expense, insure its activities in connection with this Agreement and obtain, keep in force, and maintain comprehensive general liability, professional liability, cyber-liability/network security and workers' compensation insurance at least at the levels necessary and required by Law or applicable commercial standards to insure Provider, Provider Entities, Employed Professionals and their employees and agents, against any claim for damages directly or indirectly related to performance under this Agreement or directly or indirectly related to the provision of Provider Services. In the event that Provider provides this coverage through self-insurance, such self-insurance will be supported by a written self-insurance plan and trust documents, funded in accordance with prudent actuarial projections and holding appropriate levels of net excess coverage. Upon request and within five (5) business days, Provider shall provide evidence of coverage to Oscar (or change to coverage) and will provide to Oscar, within five (5) business days from the date of service (or any shorter timeframe as required by law), notice of any Member lawsuit alleging malpractice. Upon termination of any claims made policy for professional liability insurance, Provider, Provider Entities and each Employed Professionals shall, at its sole cost and expense, obtain and maintain a "tail" policy for a period of not less than five (5) years following the effective termination of any claims made policy. The "tail" policy shall have the same policy limits as the professional liability policy.

9.2. Indemnification.

9.2.1. Indemnification by Oscar. Oscar will indemnify, defend and hold harmless Provider from all claims, judgments, costs, liabilities, damages, fines, and expenses whatsoever, including reasonable attorneys' fees, arising from any negligent acts or omissions in the fulfillment by Oscar of its obligations pursuant to this Agreement.

9.2.2. Indemnification by Provider. Provider will indemnify, defend and hold harmless Oscar, its Affiliates, representatives, Board members, contractors, employees, and agents from all claims, judgments, costs, liabilities, damages, fines, and expenses whatsoever, including reasonable attorneys' fees, arising from any acts or omissions by Provider, Provider Entities or Employed Professionals in (i) the fulfillment by Provider, Provider Entities or Employed Professionals of their obligations pursuant to this Agreement or (ii) in the provision of Provider Services to Members.

10. TERM AND TERMINATION

10.1. Term. The initial term of this Agreement will be for a period of three (3) years (the "Initial Term") beginning on the Effective Date. Following the Initial Term, the Agreement will renew for successive one (1) year terms (each a "Renewal Term") unless either Party provides notice of non-renewal at least nine months prior to the end of the Initial or any Renewal Term.

10.2. Termination for Cause. Either Party may terminate this Agreement at any time for cause as follows:

10.2.1. Upon ninety (90) days prior written notice in the event that the other Party is in material breach in the performance of any provision of this Agreement, and such breach has not been cured within sixty (60) days after the defaulting party received such written notice stating the specific default, except if such default relates to imminent harm to Member health or reasonable belief of fraud, intentional misconduct, abusive billing or malfeasance, in which case termination will be effective immediately upon written notice of default;

10.2.2. Immediately, upon written notice, in the event that either Party will apply for, or consent, to the appointment of a receiver, trustee, or liquidator of all, or of a substantial part, of its assets, file an involuntary petition in bankruptcy, or admits in writing its inability to pay its debts as they become due, make a general assignment for the benefit of creditors, file a petition or answer seeking reorganization or arrangement with creditors, or take advantage of any insolvency law or, if an order, judgment or decree will be entered by a court of competent jurisdiction adjudicating such party bankrupt or insolvent, or approving a petition seeking reorganization of the party or appointment of a receiver, trustee, or liquidator of all or a substantial part of its assets; or

10.2.3. Immediately upon written notice if Oscar or Provider will lose, relinquish, or have materially affected its certificate of authority to operate as an insurer or its license to provide Provider Services in the State, respectively.

10.3. Termination by Oscar. Notwithstanding anything in this Agreement to the contrary, Oscar may terminate this Agreement, or any Provider Entities or Employed Professional's participation under this Agreement, as set forth below. The termination of any Provider Entities or Employed Professional's participation shall not terminate this Agreement.

10.3.1. Oscar may terminate any Provider Entities' or Employed Professional's participation under this agreement upon notice to, and with the approval of, Provider.

10.3.2. Immediately upon notice if Provider or any Provider Entities fails to meet to Oscar's credentialing criteria or if a material number of Employed Professionals fails to meet Oscar's credentialing criteria.

10.3.3. Immediately upon notice in the event of Provider's breach of any representation or warranty made in this Agreement.

10.3.4. Immediately upon notice if (i) Provider or Provider Entities; (ii) any of their officers, directors, shareholders, interest holders, members, partners, or (iii) Employed Professional is arrested, charged or convicted of a criminal offense related to that person's involvement in any program under Titles XVIII, XIX, XX, or XXI of the Social Security Act, or has been terminated, suspended, barred, voluntarily withdrawn as part of a settlement agreement, or otherwise excluded in any program under Titles XVIII, XIX, XX or XXI of the Social Security Act.

10.3.5. Immediately upon the occurrence of a change in control as described in Section 3.3 of this Agreement.

THIS AGREEMENT CONTAINS TRADE SECRETS CONFIDENTIAL AND PROPRIETARY TO OSCAR

10.3.6. Immediately in the event that Provider does not comply with the requirements of Section 7.2.

10.3.7. On no less than ninety (90) calendar days' notice without cause.

10.4. Continuation of Care. If this Agreement expires or terminates for any reason, Provider will continue to provide Provider Services to Members for the period following the effective date of expiration or termination as required by applicable Law and Benefit Plans (the "Continuation Period"). During the Continuation Period the Parties will comply with the terms of this Agreement including compensation amounts and terms.

10.5. Survival of Obligations. The provisions and obligations contained in Sections 6, 7, 8 , 9, and 11 will survive any termination or expiration of this Agreement.

11. DISPUTE RESOLUTION

11.1. Member Grievance and Appeal Procedures. As set forth in the Provider Manual, Provider will cooperate with Oscar's grievance and appeal procedures as set forth in the Provider Manual and agrees that all communications and documents relating to benefit determinations, complaints, grievances, appeals and related records will be referred to Oscar in accordance with the procedures set forth within.

11.2. Provider Dispute Resolution. Oscar has established a dispute resolution mechanism ("Dispute Resolution Process") to resolve Participating Provider disputes regarding (i) claims adjudication and payment ("Payment Disputes"); (ii) Medical Necessity and Authorizations disputes ("Clinical Disputes") and (iii) credentialing disputes ("Credentialing Disputes"). Provider must submit all Payment, Clinical and Credentialing Disputes through the Dispute Resolution Process as outlined in the Provider Manual. Provider may not submit any Dispute to the meet and confer process pursuant to Section 11.4 or arbitration pursuant to Section 11.5 which Provider has not first submitted to the Dispute Resolution Process.

11.3. External Review of Clinical Disputes. Provider may submit a Clinical Dispute which has not been resolved to Provider's satisfaction through the Dispute Resolution Process to the independent medical review organization as set forth in the Provider Manual. Clinical Disputes may not be submitted to the meet and confer process set forth in Section 11.4 or the arbitration set forth in Section 11.5.

11.4. Meet and Confer Regarding Payment, Credentialing and Contractual Disputes. For all Payment and Credentialing Disputes not resolved through Oscar's Dispute Resolution Process and for any dispute arising from or concerning the interpretation and application of this Agreement, including a concern that Oscar did not follow the Dispute Resolution Process or that the Dispute Resolution Process is defective ("Contractual Disputes"), the Parties must, prior to submitting any Dispute to arbitration pursuant to Section 11.5, meet and confer in an attempt to resolve the Dispute. The Party requesting the meet and confer process will provide written notice to the other Party pursuant to Section 12.12 describing the Dispute in reasonable detail, the procedural history and outcome of the Dispute Resolution Process for Payment and Credentialing Disputes, and the remedy which the Party seeks to resolve the Dispute. Within thirty (30) days of the receiving Party's receipt of such notice, each Party will designate a representative at the senior vice president or equivalent level

to meet and confer in order to resolve the Dispute. The meet and confer process will continue as long as it remains productive or the Dispute is resolved to the mutual satisfaction of the Parties. Neither Party will cease or diminish its performance under this Agreement pending the resolution of the Dispute. If a Party determines that the meet and confer process is no longer productive that Party may end the meet and confer process by providing written notice to the other Party setting forth in reasonable detail why the meet and confer process is no longer productive. Either Party may then submit the unresolved Dispute to binding arbitration pursuant to Section 11.5.

11.5. Arbitration of Payment, Credentialing and Contractual Disputes. Payment, Credentialing and Contractual Disputes not resolved to a Party's satisfaction pursuant to Sections 11.2 and 11.3 above, may be submitted to binding arbitration administered by the American Arbitration Association in accordance with its Commercial Arbitration Rules ("AAA Rules"). The arbitration proceeding shall be held in New York, New York and will be conducted before a single arbitrator jointly agreed to by the Parties. If the Parties are unable to agree upon an arbitrator, the arbitrator shall be chosen in accordance with the AAA Rules. The Party initiating arbitration must do so within two (2) years after the Dispute arose, or it shall be deemed to have waived its right to pursue the Dispute in any forum. Payment Disputes shall be deemed to arise at the time of Oscar's unequivocal adjudication paying or denying the claim in whole or in part of the claim. The arbitration shall be subject to the Laws where the Provider Services were performed without regard to conflict of law provisions. The decision of the arbitrator will be final, conclusive and binding. The arbitrator shall have no authority to award punitive, exemplary, indirect or special damages. The Parties acknowledge that the Federal Arbitration Act applies. The arbitrator shall have the power to award any appropriate injunctive or equitable relief necessary. The Parties agree to equally share the administrative expenses of arbitration and the arbitrators' fees, however each Party will assume its own costs related to the arbitration, including any costs and fees (including attorneys' and consultants' fees), and expenses of any kind. The Parties expressly intend that any dispute relating to this Agreement be resolved on an individual basis, such that no other dispute with any third party(ies) may be consolidated or joined with this dispute in any arbitration. The Parties acknowledge that this arbitration provision precludes any Party from participating in a class action or class arbitration involving any other third party(ies), and agrees to opt-out of any class action or class arbitration filed against Oscar that raises claims in connection with this Agreement, including, but not limited to, class actions or class arbitrations that are currently pending. This arbitration provision shall survive termination or expiration of this Agreement.

12. MISCELLANEOUS

12.1. Governing Law. This Agreement will be governed by and construed and enforced in accordance with the Laws of the state where the Provider Services occurred, except where federal law applies, without regard to principles of conflicts of laws.

12.2. Conflicts between Certain Documents. If there is any conflict between this Agreement and the Provider Manual, the Provider Manual will control. In the event of any conflicts between this Agreement and the applicable Benefit Plan with respect to what services constitute Covered Services, the Benefit Plan will control. Finally, if there is any conflict between the State Program Requirements set forth Exhibit 7.3 or the Medicare Advantage Provisions attached hereto as Exhibit 7.4 and the Agreement or the Provider Manual, the State Program Requirements or Medicare Advantage Provisions shall control as required under Law. If

THIS AGREEMENT CONTAINS TRADE SECRETS CONFIDENTIAL AND PROPRIETARY TO OSCAR

applicable, if there is any conflict between this Agreement and the terms of any agreement between Oscar and the related Accountable Care Organization/Clinically Integrated Network ("ACO/CIN"), the terms of such Oscar/ACO/CIN agreement shall control.

12.3. Amendment. This Agreement may be amended at any time by mutual written agreement of both Parties. This Agreement may also be amended on written notice by Oscar.

12.4. Assignment; Delegation of Duties. This Agreement will be binding upon, and inure to the benefit of, the Parties' respective successors and assigns. This Agreement may not be assigned by Provider without the prior written consent of Oscar and any applicable governmental agencies. Provider will not subcontract or otherwise delegate its duties under this Agreement unless it obtains Oscar's prior written consent. This agreement may be assigned by Oscar to an internal corporate Affiliate upon written notice to Provider.

12.5. Relationship of the Parties. The Parties are independent contractors. This Agreement will not be deemed to create a partnership or joint venture, or an employment or agency relationship between the Parties. No Party has the right or authority to assume or create any obligation or responsibility on behalf of the other.

12.6. Third Party Beneficiary. Except as otherwise provided in this Agreement, this Agreement is not a third-party beneficiary contract and no provision of this Agreement is intended to create or may be construed to create any third-party beneficiary rights in any third party, including any Member.

12.7. Headings. This Agreement's headings are for convenience and do not, expressly or by implication, limit, define, or extend the specific terms of the section so designated.

12.8. Enforceability; No Waiver. The invalidity or unenforceability of any term or provision of this Agreement will not affect the validity or enforceability of any other term or provision. The failure of the Parties to object to or to take action with respect to any conduct of the other which is a breach of this Agreement will not be construed as a waiver of that breach or of any prior or future breaches of this Agreement.

12.9. Force Majeure. Neither Party will be liable or deemed to be in default for any delay or failure to perform any act under this Agreement resulting, directly or indirectly, from acts of God, civil or military authority, acts of public enemy, war, accidents, fires, explosions, earthquakes, flood, strikes or other work stoppages by either party's employees, or any other similar cause beyond the reasonable control of such party.

12.10. Entire Contract. This Agreement contains all the terms and conditions agreed upon by the Parties and supersedes all other agreements, oral or otherwise, of the Parties regarding the subject matter of this Agreement.

12.11. Non-Exclusivity. This Agreement is not exclusive. Either Party may contract with any other person or entity for any purpose.

12.12. Notice. Any notice required or permitted pursuant to this Agreement must be in writing, sent electronically to the addresses set forth below and effective two (2) business days after receipt. Any notice

THIS AGREEMENT CONTAINS TRADE SECRETS CONFIDENTIAL AND PROPRIETARY TO OSCAR

provided to Provider pursuant to this Section 12.12 constitutes notice to each Provider Entities and Employed Professional.

If to Oscar: providerrelations@hioscar.com

With a copy to: legal@hioscar.com

Notice Address:
Attention To:Provider Relations
75 Varick St. New York, 5th Floor NY 10013

If to Provider:
ATTN: Tim O'Hare
Address: 100 E Weatherford Street
Fort Worth, Texas 76196-0103

Phone: 817-884-1040
Email: countyjudgegrants@tarrantcountytx.gov

Any Party may at any time change its address for notification purposes by providing written notice stating the change and setting forth the new email address.

12.13. Authority. The parties whose sign this Agreement represent and warrant that they are authorized to execute this Agreement.

12.14. Counterparts. This Agreement may be signed in any number of counterparts, each of which is an original and all of which taken together form one single document.

THIS AGREEMENT CONTAINS TRADE SECRETS CONFIDENTIAL AND PROPRIETARY TO OSCAR

THIS AGREEMENT CONTAINS A BINDING ARBITRATION PROVISION THAT MAY BE ENFORCED BY THE PARTIES

IN WITNESS WHEREOF, the Parties have executed this Agreement as of the Effective Date.

OSCAR INSURANCE COMPANY	Tarrant County
_____ Signature:	_____ Signature:
_____ Name:	Tim O'Hare Name:
_____ Title:	County Judge Title:
_____ Date:	12/16/2025 Date:

THIS AGREEMENT CONTAINS TRADE SECRETS CONFIDENTIAL AND PROPRIETARY TO OSCAR

EXHIBIT 3.1
PROVIDER AND PROVIDER ENTITIES SUBJECT TO THIS AGREEMENT

LEGAL NAME	DBA	TAX IDENTIFICATION NUMBER
Tarrant County		17560011706

Provider is obligated to update this exhibit within 30 days of any change to this exhibit.

THIS AGREEMENT CONTAINS TRADE SECRETS CONFIDENTIAL AND PROPRIETARY TO OSCAR

EXHIBIT 4.2
SCHEDULE OF PROGRAMS

Unless designated otherwise, Provider agrees to participate in the following Product panels:

Defined terms set forth in this Exhibit 4.2 have the meanings set forth in 45 CFR 155.20 and 45 CFR 155.100.

Product	Fee Schedule
PPO/EPO/POS	Exhibit 5.1 Compensation
HMO	Exhibit 5.1 Compensation
Medicare Advantage	Exhibit 5.1 Compensation

1. All Qualified Health Plans offered by Oscar to Qualified Individuals as a Qualified Health Plan Issuer through a state or federally-facilitated Exchange or Off Exchange.*

☐	NO - I do not wish to participate in EPO / PPO / POS.
☐	NO - I do not wish to participate in HMO.

2. All Medicare Advantage Plans

☐	NO - I do not wish to participate in Medicare Advantage Plans

*Tiered benefit plans and tiered networks: Certain plans have defined tiered health care providers. Check for tier participation status on Oscar's provider portal when verifying members' eligibility and benefits. Members may have lower out-of-pocket costs for services provided by a tier health care provider or facility.

THIS AGREEMENT CONTAINS TRADE SECRETS CONFIDENTIAL AND PROPRIETARY TO OSCAR

EXHIBIT 4.3
COVERED SERVICES EXCLUDED FROM THIS AGREEMENT

- Behavioral Health Covered Services
- Pharmacy Covered Services
- Dental Covered Services
- Vision Covered Services
- Transplant Covered Services
- Infusion Covered Services

THIS AGREEMENT CONTAINS TRADE SECRETS CONFIDENTIAL AND PROPRIETARY TO OSCAR

EXHIBIT 5.1
COMPENSATION

Reimbursement to Provider for Provider Services shall be the lesser of either Provider's Billed Charges or the reimbursement rates set forth in this Exhibit. Either reimbursement methodology shall remove any applicable Member Responsibility.

For the purposes of this Exhibit 5.1 "Billed Charges" means the fee Provider charges for services provided to Members by Provider or Employed Professionals as set forth in the Provider's chargemaster or list of charges, which fees do not vary based on payor or source of payment. The fees charged to Members by Provider or Employed Professionals will not exceed the fee charged to patients not covered.

Reimbursement Scope & Matching Criteria

Network	TINs/NPIs	Additional Criteria
	[Applies to all TINS in contract you may reference exhibit 3.1]	N/A

Rate Sheet

Lesser of Language		Yes			
Professional Services					
Priority	**Description/Service Category**	**Codes**	**Methodology**	**Rate**	**Fee Schedule Details**
Rates					
1	**Anesthesia**	CPT Codes: All Anesthesia Codes	% of CMS Fee Schedule	65%	Prevailing
2	**Drugs**	CPT Codes: All CMS ASP Fee Schedule Codes	% of CMS ASP Fee Schedule	100%	Prevailing
3	**Durable Medical Equipment (DME)**	CPT Codes: All Durable Medical Equipment (DME) Codes	% of CMS Fee Schedule	65%	Prevailing
4	**Laboratory and Pathology**	CPT Codes: All Laboratory and Pathology Codes	% of CMS Fee Schedule	65%	Prevailing
5	**Occupational Therapy**	CPT Codes: All Occupational Therapy Codes	% of CMS Fee Schedule	75%	Prevailing

THIS AGREEMENT CONTAINS TRADE SECRETS CONFIDENTIAL AND PROPRIETARY TO OSCAR

6	**Physical Therapy**	CPT Codes: All Physical Therapy Codes	% of CMS Fee Schedule	75%	Prevailing
7	**Radiology**	CPT Codes: Radiology Codes	% of CMS Fee Schedule	65%	Prevailing
8	**Any Service not captured above**	CPT Codes: All Medicare Codes	% of CMS Fee Schedule	100%	Prevailing
9	**Any service for which there is no corresponding CMS rate**	CPT Codes: All OFS Codes	% of OFS Fee Schedule	100%	Prevailing
10	**Any service for which there is no corresponding CMS rate and no Oscar Fee Schedule rate**	All Codes	% of Billed Charges	25%	

THIS AGREEMENT CONTAINS TRADE SECRETS CONFIDENTIAL AND PROPRIETARY TO OSCAR

EXHIBIT 5.1.2
QUALITY INCENTIVE PROGRAMS

1. Quality Incentive Program Generally. Oscar will maintain a quality improvement program ("Quality Incentive Program" or "QIP") whose goal is to meet and exceed certain clinical and customer quality standards in order to improve (i) the quality of care provided to Members and (ii) Member satisfaction with Oscar and its Participating Providers. As part of Oscar's quality improvement program, Oscar will develop from time to time certain QIPs designed to provide additional compensation "(Quality Based Compensation") to Participating Providers, including Provider as applicable to each QIP, as an incentive to improve the quality of care provided to Members and increase Member satisfaction.

2. Provider Eligibility for Quality Incentive Programs. Oscar will develop QIPs from time to time based on a variety of factors including but not limited to the Member populations, Programs, Rating Areas, and Covered Services targeted by each QIP. Provider acknowledges that not all QIPs will apply to Provider and the Covered Services it provides to Members. Oscar will provide at least thirty days' written notice to Provider of each QIP in which Provider is eligible to participate. Provider will be deemed to participate in those QIPs unless Provider provides written notice to Oscar within thirty days of receiving Oscar's notice that it will not participate. Provider acknowledges however that if Provider opts out of any QIP Provider may be disqualified from receiving any Quality Based Compensation as determined by Oscar in its sole discretion.

3. Development of Quality Targets. Oscar will develop and determine the Quality Targets for each Measurement Year. The Quality Targets determined by Oscar will be based on nationally recognized standards such as Healthcare Effectiveness Data and Information Set (HEDIS), Consumer Assessment of Healthcare Providers and Systems (CAHPS) and CMS Stars. Oscar may also utilize nationally recognized evidence-based clinical practice guidelines such as those published by The American Congress of Obstetricians and Gynecologists (ACOG), the American Academy of Pediatrics, the United States Preventive Services Task Force and other professional organizations. Oscar will consult with Provider in the development of Quality Targets and Quality Adjustment Percentages for each Measurement Year but will retain authority to determine each. Oscar will provide the Quality Targets to Provider in writing prior to the beginning of each Measurement Year.

4. Reporting.

4.1. Periodic Reporting During the Measurement Year. Oscar will provide periodic reports regarding Provider's performance under each QIP during the applicable Measurement Year. Oscar's reports will set forth in reasonable detail the Quality Targets on which Provider is measured, Provider's year to date performance against those Quality Targets and other information reasonably required by Provider in regards to the QIPs.

4.2. Final QIP Report. Oscar will provide a Final QIP Report within (60) days of Oscar's receipt of all information Oscar requires in order to complete the Final QIP Report for the applicable Measurement Year.

THIS AGREEMENT CONTAINS TRADE SECRETS CONFIDENTIAL AND PROPRIETARY TO OSCAR

The Final QIP Report will set forth Provider's final performance for each Quality Target for the applicable Measurement Year.

4.3. Appeals/Dispute Resolution. In the event that Provider disagrees with the Final QIP Report, Provider may file a written appeal with Oscar's Chief Medical Officer within thirty (30) days of receiving the Final QIP Report. Provider's appeal must set forth in reasonable detail how Provider believes the Final QIP Report is inaccurate, the specific change which Provider recommends be made in the Final QIP Report, and the Provider's senior executive, who must be a licensed health care professional, who will serve as Provider's designated representative for resolution of the appeal. Oscar's Chief Medical Officer or his/her designee, and Provider's designated representative, will work together in good faith to resolve Provider's appeal. Oscar's payment of any Quality Based Compensation will be withheld until resolution of Provider's appeal regarding the Final QIP Report.

THIS AGREEMENT CONTAINS TRADE SECRETS CONFIDENTIAL AND PROPRIETARY TO OSCAR

EXHIBIT 7.3

TEXAS REGULATORY REQUIREMENTS

This "Texas Regulatory Requirements" is made part of the Participating Provider Agreement or Network Access Agreement entered into with Oscar contracting on behalf of itself or one of its affiliates.

In the event of any inconsistency between the terms and conditions of this Exhibit and the terms and conditions in the Agreement, the terms and conditions of this Exhibit will govern. The defined terms in this Exhibit will have the meaning set forth in the Agreement unless otherwise defined in this Exhibit. Each provision or requirement in the Exhibit references the relevant Texas statute or regulation.

HMO PLANS

For those products that are Health Maintenance Organization (HMO) plans, the following conditions apply:

Oscar and Provider will comply with the requirements set forth in Tex. Ins. Code (TIC) §§ 843 and 1272, and 28 Tex. Admin. Code (TAC) Chapters 11 and 21 as applicable and as may be amended from time to time including but not limited to the following:

1. **Hold Harmless.** Provider will look only to Oscar and agree to hold Members harmless for compensation for all Covered Services provided to Members during the term of this Agreement. Under no circumstances, including but not limited to, nonpayment by Oscar, Oscar insolvency, or breach of this Agreement or an Attachment, will Provider bill, charge, collect a deposit from, or seek compensation, remuneration, or reimbursement from, or have any recourse against, Medicare, Medicaid, Members or persons (other than Oscar) acting on the Members' behalf (including but not limited to the applicable participating employer group or Payor) for Covered Services provided pursuant to this Agreement. This provision does not prohibit collection of Member Responsibility in accordance with the terms of the applicable Coverage or fees for services provided to Members which do not constitute Covered Services (unless Oscar denied payment on the basis of lack of Medical Necessity or Provider's failure to comply with the terms and conditions of this Agreement or any Attachment) or for which Member has specifically otherwise assumed financial responsibility, in writing, prior to the time that services were rendered. This section shall: (i) survive the termination of this Agreement or any Attachment, regardless of the reason for termination; (ii) supersede any oral or written agreement now existing or hereafter entered into between Provider and a Member, persons acting on the Members' behalf (other than Oscar), and Oscar or a group contract holder; and (iii) be construed to be for the benefit of Members, persons acting on the Member's behalf (other than Oscar), Oscar, or a group contract holder. (TAC 11.901(a))

THIS AGREEMENT CONTAINS TRADE SECRETS CONFIDENTIAL AND PROPRIETARY TO OSCAR

2. **Retaliation.** Oscar shall not engage in retaliatory action, including refusal to renew or cancellation of coverage, against a Member because the Member or a person acting on behalf of the Member has filed a complaint or appealed a decision by Oscar. (TIC 843.281)

3. **Notice for Continuity of Care.** Oscar will provide reasonable advance notice to Members of the impending termination from the network of a physician or provider who is currently treating the Member. (TIC 843.309, 843.362)

4. **Notice to Members of Provider Termination.** If Provider is to be terminated from Oscar's network for a reason other than Provider's request, Oscar will not notify Provider's patients of the termination until the effective date of the termination or the advisory review panel makes a formal recommendation. If the termination is for a reason related to imminent harm, Oscar will notify patients immediately. (TIC 843.308)

5. **Complaint Notices.** Provider agrees to post complaint notices in Provider's offices as required by TIC § 843.283.

6. **Claims Processing, Submission, and Prompt Payment.**

    a. Oscar and Provider shall comply with the statutes and regulations regarding prompt payment of claims as described in TIC Chapter 542, Subchapter B, (concerning Prompt Payment of Claims); §1271.005 (concerning Applicability of Other Law); and all applicable statutes and rules pertaining to prompt payment of clean claims, including Insurance Code Chapter 843, Subchapter J, (concerning Payment of Claims to Physicians and Providers); and 28 TAC Chapter 21, Subchapter T (relating to Submission of Clean Claims) with respect to payment to Provider for covered services rendered to enrollees.
    b. Provider must submit claims submitted for Provider Services as follows no later than the later of (i) the time period set forth in the Agreement or (ii) ninety-five days (95) after the date of the Provider Services were rendered. Provider will not submit a duplicate claim for payment before the forty-sixth (46) day after the original claim was submitted. (TAC 21.2806)

7. **Capitation.** If capitation is used as a form of compensation in the Agreement, Provider and Oscar agree to comply with TIC §§ 843.315 and 843.316.

8. **Primary Care Provider.** Oscar shall include a space in its application form for a Member to select a primary care provider. A Member shall at all times have the right to select or change a primary care provider within Oscar's network of available primary care providers, except that Oscar may limit a Member's request to change primary care providers to not more than four changes in a

THIS AGREEMENT CONTAINS TRADE SECRETS CONFIDENTIAL AND PROPRIETARY TO OSCAR

12-month period. Oscar will not consider an applicant provider, as defined by TIC Chapter 1452, as an available primary care provider for selection by a Member. (TIC 843.203)

9. **Podiatrists.** A podiatrist, practicing within the scope of the law regulating podiatry, is permitted to furnish X-rays and non-prefabricated orthotics covered by the evidence of coverage. (TIC 843.311)

10. **Electronic Claims Filing.** Oscar and Provider agree to comply with the requirements of TAC §21.3701, including the waiver request process, regarding any requirement in the Agreement related to electronic claims filing. (TIC Chapter 1213 and TAC 21.3701)

11. **Overpayments from Members.** Provider agrees to comply with all applicable requirements of TIC §1661.005 regarding refunds of overpayments from Members. (TAC 11.901(b)(11))

12. **Other Coverage.** Provider shall retain in Provider's records updated information concerning a patient's other health benefit plan coverage. (TAC 11.901(b)(12))

13. **Information Available to Provider.** Provider may, by any reasonable and verifiable means, request from Oscar all information necessary to determine that Provider is being compensated in compliance with the Agreement ("Fee Information"). (TAC 11.901(c))

    a. Oscar shall provide information that includes a level of detail sufficient to enable a reasonable person with sufficient training, experience, and competence in claims processing to determine the payment to be made under the terms of the contract for covered services rendered to enrollees.
    b. Oscar may provide the required information by any reasonable method through which the physician or provider can access the information, including email, computer disks, or other electronic storage and transfer technology, paper, or access to an electronic database.
    c. Oscar will provide the required information by the 30th day after the date Oscar receives Provider's request.
    d. The information provided by Oscar will include all information necessary for compliance with the requirements of 28 TAC 11.901(c), as applicable.

14. **Changes to Fee Information.** No amendment, revision, or substitution of any of the claims payment procedures or any of the Fee Information will be effective as to Provider unless Oscar provides at least 90-calendar-days written notice to Provider identifying with specificity the amendment, revision, or substitution. Oscar may not make retroactive changes to claims payment procedures or any of the Fee Information. (TAC 11.901(c))

15. Provider Use of Fee Information. Provider may not:

THIS AGREEMENT CONTAINS TRADE SECRETS CONFIDENTIAL AND PROPRIETARY TO OSCAR

a. use or disclose the Fee Information for any purpose other than:
    i. the physician's or provider's practice management,
    ii. billing activities, or
    iii. other business operations, or
    iv. communications with a governmental agency involved in the regulation of health care or insurance;
b. use the Fee Information to knowingly submit a claim for payment that does not accurately represent the level, type, or amount of services that were actually provided to an enrollee or to misrepresent any aspect of the services; or
c. rely on the Fee Information as a representation that a Member is covered for that service under the terms of the Member's evidence of coverage. (TAC 11.901(b)(6))

16. **Texas Termination Requirements.** Oscar shall provide notice of termination of Provider by the HMO to the physician or provider at least 90 days before the effective date of the termination. Not later than 30 days following receipt of the written notification of termination, Provider may request a review by Oscar's advisory review panel except in a case involving: (A) imminent harm to patient health; (B) an action by a state medical or dental board, another medical or dental licensing board, or another licensing board or government agency that effectively impairs the physician's or provider's ability to practice medicine, dentistry, or another profession; or (C) fraud or malfeasance. Within 60 days after receipt of Provider's request for review, the advisory review panel must make its formal recommendation and the HMO must communicate its decision to Provider. Upon request by Provider, the review process will be expedited according to the requirements of TIC § 843.307.

PPO/EPO PLANS

For those products that are Preferred Provider Benefit Plans or Exclusive Provider Benefit Plans (referred to herein as "PPO" plans), Oscar and Provider will comply with the requirements set forth in Tex. Ins. Code (TIC) § 1301 and 28 Tex. Admin. Code (TAC) Chapters 3 and 21 as applicable and as may be amended from time to time including but not limited to the following:

1. **Member Hold Harmless.** As required by TIC §1301.060, Provider will look only to Oscar and agree to hold Members harmless for compensation for all Covered Services provided to Members during the term of this Agreement. Under no circumstances, including but not limited to, nonpayment by Oscar, Oscar insolvency, or breach of this Agreement or an Attachment, will Provider bill, charge, collect a deposit from, or seek compensation, remuneration, or reimbursement from, or have any recourse against, Medicare, Medicaid, Members or persons (other than Oscar) acting on the Members' behalf (including but not limited to the applicable participating employer group or Payor) for Covered Services provided pursuant to this Agreement. This provision will not prohibit collection of Member Responsibility (including copayments, coinsurance or deductibles) made in accordance with the terms of the applicable Coverage, nor does this provision affect the right of Provider to collect fees for services provided to

THIS AGREEMENT CONTAINS TRADE SECRETS CONFIDENTIAL AND PROPRIETARY TO OSCAR

Members which do not constitute Covered Services (unless Oscar denied payment on the basis of lack of Medical Necessity or Provider's failure to comply with the terms and conditions of this Agreement or any Attachment) or for which Member has specifically otherwise assumed financial responsibility, in writing, prior to the time that services were rendered. Provider further agrees that this section will: (i) survive the termination of this Agreement or any Attachment, regardless of the reason for termination; (ii) supersede any oral or written agreement now existing or hereafter entered into between Provider and a Member, persons acting on the Members' behalf (other than Oscar), and the participating employer, Oscar, or group contract holder; and (iii) be construed to be for the benefit of Members, persons acting on the Member's behalf (other than Oscar), and the participating employer, Oscar, or group contract holder.

2. **No Retaliation.** As required by TIC §1301.066 and §1301.161, Oscar will not terminate, refuse to renew this Agreement or take any retaliatory action against Provider as a result of any complaints filed by Provider on behalf of a Member or policyholder, against Oscar or due to an appeal of a decision made by Oscar.

3. Interference with Relationship Between Patient and Physician or Health Care Provider Prohibited. Oscar will not attempt to prohibit, or discourage Provider from discussing with or communicating to a current, prospective, or former Member, or a person designated by a Member, information or an opinion that are protected under TIC § 1301.067.

4. Protected Communications by Provider. As required by Tex. Ins. Code Ann. § 1301.0058, Oscar will not in any manner prohibit, attempt to prohibit, penalize, terminate, or otherwise restrict Provider from communicating with a Member about the availability of out-of-network providers for the provision of the Member's medical or health care services or other communications protected under TIC § 1301.0058.

5. Claims Processing, Submission, and Prompt Payment.

a. Oscar and Provider shall comply with the statutes and regulations regarding prompt payment of claims as described in TIC Chapter 542, Subchapter B, (concerning Prompt Payment of Claims); TIC Chapter 1301 - Subchapters C and C-1 (concerning Prompt Payment of Claims and Other Provisions Relating to Payment of Claims); and 28 TAC Chapter 21, Subchapter T (relating to Submission of Clean Claims) with respect to payment to Provider for covered services rendered to enrollees.
b. Provider must submit claims submitted for Provider Services as follows no later than the later of (i) the time period set forth in the Agreement or (ii) ninety-five days (95) after the date of the Provider Services were rendered. Provider will not submit a duplicate claim for payment before the forty-sixth (46) day after the original claim was submitted. (TAC 21.2806)

THIS AGREEMENT CONTAINS TRADE SECRETS CONFIDENTIAL AND PROPRIETARY TO OSCAR

6. Coordination of Payment or Benefits. Coordination of payments or benefits shall be conducted according to TIC §1301.134.

7. Information Available to Provider. Provider may, by any reasonable and verifiable means, request from Oscar all information necessary to determine that Provider is being compensated in compliance with the Agreement ("Fee Information"). (TAC 3.3703(a))

c. Oscar shall provide information that includes a level of detail sufficient to enable a reasonable person with sufficient training, experience, and competence in claims processing to determine the payment to be made under the terms of the contract for covered services rendered to enrollees.
d. Oscar may provide the required information by any reasonable method through which the physician or provider can access the information, including email, computer disks, or other electronic storage and transfer technology, paper, or access to an electronic database.
e. Oscar will provide the required information by the 30th day after the date Oscar receives the Provider's request.
f. The information provided by Oscar will include all information necessary for compliance with the requirements of 28 TAC 3.3703(a)(20), as applicable.

8. Changes to Fee Information. No amendment, revision, or substitution of any of the claims payment procedures or any of the Fee Information will be effective as to Provider unless Oscar provides at least 90-calendar-days written notice to Provider identifying with specificity the amendment, revision, or substitution. Oscar may not make retroactive changes to claims payment procedures or any of the Fee Information. (TAC 3.3703(a)(20))

9. Provider Use of Fee Information. Provider may not:

g. use or disclose the Fee Information for any purpose other than:
    i. the physician's or provider's practice management,
    ii. billing activities, or
    iii. other business operations, or
    iv. communications with a governmental agency involved in the regulation of health care or insurance;
h. use the Fee Information to knowingly submit a claim for payment that does not accurately represent the level, type, or amount of services that were actually provided to an enrollee or to misrepresent any aspect of the services; or
i. rely on the Fee Information as a representation that a Member is covered for that service under the terms of the Member's evidence of coverage. (TAC 3.3703(a)(20))

THIS AGREEMENT CONTAINS TRADE SECRETS CONFIDENTIAL AND PROPRIETARY TO OSCAR

10. Termination of this Agreement; Provider Rights to Notice and Review. As required by TIC §1301.053 and §1301.057 and TAC 3.3706(d), prior to the termination of this Agreement by Oscar, Oscar will provide a written explanation to Provider of the reasons for termination. Prior to the effective date of the termination and within a period not to exceed sixty (60) days, Provider is entitled to a review by an advisory review panel of Oscar's proposed termination. Upon Provider's request, Oscar will provide (i) a copy of the recommendation of the advisory review panel and Oscar's determination and (ii) a written explanation of Oscar's determination if that determination is contrary to the advisory panel's recommendation. Review by an advisory panel will not be required for termination under circumstances involving (i) imminent harm to a Member's health; (ii) an action by a state medical or other physician licensing board or other government agency that effectively impairs the ability of a provider to practice medicine; or (iii) fraud or malfeasance. Oscar will offer Provider an expedited review conducted in accordance with a process that complies with rules established by the Texas Commissioner of Insurance; all information on which Oscar wholly or partly based the termination, including the economic profile of Provider, the standards by which the provider is measured, and the statistics underlying the profile and standards. Oscar will not notify Members of the termination until the earlier of the effective date of termination or the date that the advisory review panel makes its recommendations except in situations involving Imminent Harm.

11. Continuity of Treatment. Both Oscar's obligations for claims payment and Providers obligation for continuing treatment involving the termination of this Agreement shall be governed by TIC §§ 1301.152 – 1301.154.

12. Records Relating to Other Insurance. As required by 28 Tex. Admin. Code § 3.3703(a)(21), Provider will retain in Provider's records updated information concerning a Member's other health benefit Oscar coverage.

13. Notice. As required by TAC §3.3703(a)(18) and TIC §1301.160, for notices required under Section 12.12 of the Agreement, Oscar will provide assistance to Provider in ensuring that regulatory requirements are met.

14. Electronic Health Transactions. Oscar and Provider agree to comply with the requirements of TAC §21.3701, including the waiver request process, regarding any requirement in the Agreement related to electronic claims filing.

15. Complaint Resolution. As required by TIC §1301.055, the mechanism for Oscar to resolve complaints by a Member and Provider are set forth in Section 11 of the Agreement. The complaint resolution process in Section 11 will, at a minimum, provide for reasonable due process that includes, in an advisory role only, a review panel selected pursuant to TIC §1301.053(b).

16. Economic Profiling. As required by TIC § 1301.058, in the event that Oscar conducts, uses, or relies on economic profiling to admit or terminate the participation of physicians or health care

THIS AGREEMENT CONTAINS TRADE SECRETS CONFIDENTIAL AND PROPRIETARY TO OSCAR

providers in a benefit plan, Oscar will make available to Provider on request the economic profile of Provider, including the written criteria by which Provider's performance is measured. The economic profile must be adjusted to recognize the characteristics of a Provider's practice that may account for variations from expected costs.

17. Contract Provisions Relating To Use Of Hospitalist. Oscar will not require a Provider who is the Member's physician to use a hospitalist for a hospitalized patient. In this section, "hospitalist" means a physician who (i) serves as physician of record at a hospital for a hospitalized patient of another physician and (ii)) returns the care of the patient to that other physician at the end of the patient's hospitalization. (TIC 1301.063)

18. Inducements to Limit Medically Necessary Services. The Agreement shall not be interpreted in a manner that provides an incentive to Provider to directly or indirectly limit medically necessary services. (TIC 1301.068)

19. Changes To Preauthorization Requirements. Oscar shall provide notice to Provider of a new or amended preauthorization requirement as required by law not later than the 60th day before the date a new or amended preauthorization requirement takes effect. For changes to a preauthorization requirement or process that removes or changes preauthorization requirement in a way that is less burdensome to Provider, Oscar will provide notice of the change to Provider as required by law not later than the fifth day before the date the change takes effect. (TIC 1301.1352)

20. Adverse Material Change to Agreement. Any Adverse Material Change to the Agreement impacting Provider's participation in Oscar's preferred provider or exclusive provider benefit plans shall be made consistent with the requirements of Texas law at TIC §1301.0642. "Adverse Material Change" shall be understood consistent with the provisions at TIC §1301.0642.

21. Discounted Charges to Members. Provider agrees to bill Members based on the discounted fee described in this Agreement and not Provider's full or billed charge. (TIC 1301.060)

22. Overpayments from Members. Provider agrees to comply with all applicable requirements of TIC §1661.005 regarding refunds of overpayments from Members. (TAC 3.3703(a)(25))

23. Facility Notice of Terminated Facility-Based Provider. If Provider is a facility, Provider shall give notice to Oscar of the termination of a contract between Provider and a facility-based physician group that is a participating provider in Oscar's network as soon as reasonably practicable, but not later than the fifth business day following termination of the contract. (TAC 3.3703(a)(26))

24. Referral to Facility - Member Notice Requirements. Upon referring a Member to a facility for surgery (other than emergency care as defined at TIC 1301.155), Provider shall:

THIS AGREEMENT CONTAINS TRADE SECRETS CONFIDENTIAL AND PROPRIETARY TO OSCAR

a. notify Member of the possibility that out-of-network providers may provide treatment and that Member can contact Oscar for more information;
b. notify Oscar that surgery has been recommended; and
c. notify Oscar of the facility that has been recommended for the surgery. (TAC 3.3703(a)(27))

25. Facility Notice to Members When Scheduling Surgery. Upon scheduling a Member for surgery (other than emergency care as defined at TIC 1301.155), a Provider that is a facility shall:

a. notify Member of the possibility that out-of-network providers may provide treatment and that Member can contact Oscar for more information; and
b. notify Oscar that surgery has been scheduled. (TAC 3.3703(a)(28))

THIS AGREEMENT CONTAINS TRADE SECRETS CONFIDENTIAL AND PROPRIETARY TO OSCAR

EXHIBIT 7.3E
QUALIFIED HEALTH PLAN REQUIREMENTS

Oscar (for the purposes of this Exhibit "QHP Issuer") and Provider (for the purposes of this Exhibit "Delegate Entity" or "Downstream Entity") will comply with the terms and conditions set forth in Exhibit 7.3E for Oscar's Qualified Health Benefit Plans. In the event of a conflict between the terms and conditions in this Exhibit 7.3E and the Agreement, the terms and conditions of this Exhibit 7.3E will control.

The Parties understand and agree that Oscar as a Qualified Health Plan Issuer may delegate some of Oscar's responsibilities to Provider as Delegate Entity or Downstream Entity pursuant to this Agreement. In the event that Oscar delegates any of its responsibilities to Provider as a Delegated and Downstream Entity, in such case, the delegation requirements set forth in 42 CFR 156.340 will be incorporated into such amendment or separate agreement.

I.

1. Definitions:

1.1 Delegated Entity means any party, including an agent or broker, that enters into an agreement with a QHP issuer to provide administrative services or health care services to qualified individuals, qualified employers, or qualified employees and their dependents.

1.2 Downstream Entity means any party, including an agent or broker, that enters into an agreement with a delegated entity or with another downstream entity for purposes of providing administrative or health care services related to the agreement between the delegated entity and the QHP Issuer. The term "Downstream Entity" is intended to reach the entity that directly provides administrative services or health care services to qualified individuals, qualified employers, or qualified employees and their dependents.

1.3 Exchange means a governmental agency or non-profit entity that meets the applicable standards of this part and makes QHPs available to Qualified Individuals and/or qualified employers. Unless otherwise identified, this term includes an Exchange serving the individual market for Qualified Individuals and a SHOP serving the small group market for qualified employers, regardless of whether the Exchange is established and operated by a State (including a regional Exchange or subsidiary Exchange) or by HHS.

1.4 Group Health Insurance Coverage means health insurance coverage offered in connection with a group health plan. Individual health insurance coverage reimbursed by the arrangements described in 29 CFR 2510.3–1(l) is not offered in connection with a group health plan, and is not group health insurance coverage, provided all the conditions in 29 CFR 2510.3–1(l) are satisfied.

1.5 Group Health Plan or Plan means a group health plan within the meaning of 45 CFR 146.145(a).

THIS AGREEMENT CONTAINS TRADE SECRETS CONFIDENTIAL AND PROPRIETARY TO OSCAR

1.6 Health Insurance Issuer or Issuer means an insurance company, insurance service, or insurance organization (including an HMO) that is required to be licensed to engage in the business of insurance in a State and that is subject to State law that regulates insurance (within the meaning of section 514(b)(2) of ERISA). This term does not include a group health plan.

1.7 Issuer means a health insurance issuer.

1.8 Qualified Health Pan (QHP)has the meaning given to the term in 42 CFR § 155.20.

1.9 Qualified Health Plan Issuer has the meaning given to the term in 42 CFR § 155.20.

1.10 Qualified Individual has the meaning given to the term in 42 CFR § 155.20 of this subchapter.

2. Required Provisions under 45 C.F.R. § 156.340

Notwithstanding any relationship(s) that QHP Issuer may have with Delegated and Downstream Entity, QHP Issuer maintains responsibility for its compliance and the compliance of any of its Delegated and Downstream Entity with all applicable Federal standards related to Exchanges. The applicable standards depend on the Exchange model type in which the QHP is offered.

3. Delegation agreement specifications.

If any of the QHP Issuer's activities or obligations, in accordance with paragraph 2 of this section, are delegated to Delegated and Downstream Entity, the QHP Issuer's Agreement with any Delegated and Downstream Entity will:
(1) Specify the delegated activities and reporting responsibilities in the Agreement or amend the Agreement to reflect such delegation;
(2) The QHP Insurer shall have the right to revoke any of the delegated activities and reporting standards or specify other remedies in instances where HHS or the QHP Issuer determines that such parties have not performed satisfactorily;
(3) Delegated and Downstream Entity must comply with all applicable laws and regulations relating to the standards specified under paragraph 2 of this section;
(4) Delegated and Downstream Entity must permit access by the HHS Secretary and the OIG or their designees in connection with their right to evaluate through an audit, inspection, or other means, to the Delegated and Downstream Entity’s books, contracts, computers, or other electronic systems, including medical records and documentation, relating to the QHP Issuer's obligations in accordance with Federal standards under paragraph 2 of this section until 10 years from the final date of the agreement period;
(5) Delegated and Downstream Entity agree that the relevant Exchange authority may demand and receive Delegated and Downstream Entity’s books, contracts, computers, or other electronic

THIS AGREEMENT CONTAINS TRADE SECRETS CONFIDENTIAL AND PROPRIETARY TO OSCAR

systems, including medical records and documentation, relating to the QHP Issuer's obligations in accordance with Federal standards under paragraph 2 of this section until 10 years from the final date of the Agreement period.

II.
For those Facilities with more than 50 beds, the additional requirements are as follows:

1. If Provider is a licensed hospital, as defined under 42 CFR § 124.2 with fifty (50) beds or more, it certifies that it is in compliance with the patient safety standards as articulated in 45 CFR § 156.1110 and in accordance with section 131I(h) of the Affordable Care Act for plan years beginning on or after January 1, 2017. To acknowledge its compliance with these requirements, Provider affirms to Oscar Health that it:

a. Utilizes a patient safety evaluation system as defined in 42 CFR § 3.20; and
b. Implements a mechanism for comprehensive person-centered hospital discharge to improve care coordination and health care quality for each of its patients; or it
c. Implements an evidence-based initiative, to improve health care quality through the collection, management and analysis of patient safety events that reduces all cause preventable harm, prevents hospital readmission, or improves care coordination.

2. Provider acknowledges that Oscar may rely on this affirmation to demonstrate its compliance with its federal and state requirements as a Qualified Health Plan and may make this certification available to CMS and applicable state regulators to demonstrate its compliance with these requirements.

THIS AGREEMENT CONTAINS TRADE SECRETS CONFIDENTIAL AND PROPRIETARY TO OSCAR

EXHIBIT 7.4
MEDICARE ADVANTAGE REQUIREMENTS

Oscar and Provider will comply with the terms and conditions set forth in Exhibit 7.4 for Oscar's Medicare Advantage Benefit Plans. In the event of a conflict between the terms and conditions in this Exhibit 7.4 and the Agreement, the terms and conditions of this Exhibit 7.4 will control.

The Parties understand and agree that Oscar is not delegating any of Oscar's responsibilities to Provider pursuant to this Agreement. In the event that Oscar delegates any of its responsibilities to Provider it will do so through an amendment this Agreement or executing a separate agreement. In each case, the delegation requirements set forth in 42 CFR 422.504 will be incorporated into such amendment or separate agreement.

1. Definitions:

1.1. Centers for Medicare and Medicaid Services ("CMS"): the agency within the Department of Health and Human Services that administers the Medicare program.

1.2. Downstream Entity: any party that enters into a written arrangement, acceptable to CMS, with persons or entities involved with the MA benefit, below the level of the arrangement between Oscar and a First Tier Entity, including Provider and Provider Entities. These written arrangements continue down to the level of the ultimate provider of both health and administrative services.

1.3. First Tier Entity: any party that enters into a written arrangement, acceptable to CMS, with Oscar to provide administrative services or health care services for a Medicare eligible individual under the MA program. For the purpose of this Exhibit, Provider and Provider Entities are First Tier Entities of Oscar.

1.4. HHS: the United States Department of Health and Human Services.

1.5. Medicare Advantage ("MA"): an alternative to the traditional Medicare program in which private plans run by health insurance companies provide health care benefits that eligible beneficiaries would otherwise receive directly from the Medicare program.

1.6. Medicare Advantage Organization ("MA organization"): a public or private entity organized and licensed by a State as a risk-bearing entity (with the exception of provider-sponsored organizations receiving waivers) that is certified by CMS as meeting the MA contract requirements. For the purpose of this Exhibit, Oscar is a Medicare Advantage Organization.

1.7. Member or Enrollee: a Medicare Advantage eligible individual who has enrolled in or elected coverage through a Medicare Advantage Organization.

THIS AGREEMENT CONTAINS TRADE SECRETS CONFIDENTIAL AND PROPRIETARY TO OSCAR

1.8.Provider: (1) any individual who is engaged in the delivery of health care services in a State and is licensed or certified by the State to engage in that activity in the State; and (2) any entity that is engaged in the delivery of health care services in a State and is licensed or certified to deliver those services if such licensing or certification is required by State law or regulation.

1.9. Related Entity: any entity that is related to the MA organization by common ownership or control and (1) performs some of the MA organization's management functions under contract or delegation; (2) furnishes services to Medicare enrollees under an oral or written agreement; or (3) leases real property or sells materials to the MA organization at a cost of more than $2,500 during a contract period.

2. Required Provisions

2.1.Maintenance of Records. Provider agrees to maintain books; contracts; computer or other electronic systems; records, including medical records; and other documentation regarding this Agreement and Provider Services rendered to Members involving matters related to CMS' contract with Oscar for a period of ten (10) years following termination or expiration of this Agreement, or until completion of an audit, whichever is later. [42 C.F.R. § 422.504(i)(2)]

2.2.Access to Records. HHS, the Comptroller General, or their designees have the right to audit, evaluate, collect, and inspect any pertinent information for any particular contract period, including, but not limited to, any books, contracts, computer or other electronic systems, including medical records and documentation of the First Tier, Downstream, and Related Entities related to CMS' contract with Oscar through ten (10) years from the final date of the final contract period of the contract entered into between CMS and Oscar or from the date of completion of any audit, whichever is later. Provider, Provider Entities and Employed Professionals shall, and shall require that their Downstream Entities will provide all such information to HHS, the Comptroller General or their designees. [42 C.F.R. §§ 422.504(i)(2)(i) and (iv)]

2.3.Audits. HHS, the Comptroller General, or their designees have the right to audit, evaluate, collect, and inspect any records under Section 2.2 of this Exhibit directly from Provider, Provider Entities, Employed Professionals and any Downstream Entity. For records subject to audit, except in exceptional circumstances, CMS will provide notification to Oscar that a direct request for information has been initiated. [42 C.F.R. §§ 422.504(i)(2)(ii) and (iii)]

2.4.Confidentiality and Accuracy of Member Information. Provider, Provider Entities and Employed Professionals will comply with the confidentiality and enrollee record accuracy requirements, including: (1) abiding by all Federal and State laws regarding confidentiality and disclosure of medical records, or other health and enrollment information, (2) ensuring that medical information is released only in accordance with applicable Federal or State law, or pursuant to court orders or subpoenas, (3) maintaining the records and information in an accurate and timely manner, and (4) ensuring timely access by enrollees to the records and information that pertain to them. [42 C.F.R. §§ 422.504(a)(13) and 422.118]

2.5.Member Hold Harmless. Members will not be held liable for payment of any fees that are the legal obligation of the Oscar. The provisions of this Section 2.5 shall apply in the event of the insolvency of Oscar, any breach of this Agreement by Oscar or Provider.[42 C.F.R. §§ 422.504(i)(3)(i) and 422.504(g)(1)(i)]. For all enrollees eligible for both Medicare and Medicaid, enrollees will not be held liable for Medicare Part A and B cost sharing when the State is responsible for paying such amounts. Providers will be informed of Medicare and Medicaid benefits and rules for enrollees eligible for Medicare and Medicaid. Provider may not impose cost-sharing that exceeds the amount of cost-sharing that would be permitted with respect to the individual under title XIX if the individual were not enrolled in such a plan. Providers will: (1) accept the MA plan payment as payment in full, or (2) bill the appropriate State source. [42 C.F.R. §§ 422.504(i)(3)(i) and 422.504(g)(1)(i)]

2.6.Oscar's Contract with CMS. Any services or other activity performed in accordance with this Agreement by Provider will be performed consistent and comply with the Oscar's obligations under its contract with CMS. [42 C.F.R. § 422.504(i)(3)(iii)]

2.7.Prompt Pay. Contracts or other written agreements between Oscar and providers or between First Tier and Downstream Entities must contain a prompt payment provision, the terms of which are developed and agreed to by the contracting parties. Oscar is obligated to pay contracted providers under the terms of the contract between the Oscar and Provider. [42 C.F.R. §§ 422.520(b)(1) and (2)]. Section 5.3 of this Agreement states that Oscar will adjudicate claims and reimburse Provider in accordance with the timeframes set forth in the Provider Manual or as otherwise required by Law.

2.8.Compliance with Medicare Laws and CMS Instructions. Provider, Provider Entities, Employed Professionals, and Provider's Downstream Entities will comply with all applicable Medicare laws, regulations, and CMS instructions. [42 C.F.R. §§ 422.504(i)(4)(v)] Further, Provider agrees to comply with Oscar's policies and procedures as set forth in this Exhibit and the Agreement.

2.9.Selection of Participating Providers. If Oscar delegates the selection of providers, contractors, or subcontractor, Oscar retains the right to approve, suspend, or terminate any such arrangement. [42 C.F.R. §§ 422.504(i)(4) and (5)]

2.10. Exclusion and Preclusion from Federal Health Programs.

2.10.1. Exclusion. Provider represents and warrants that neither Provider, Provider Entities, nor any of their Employed Professionals, officers, directors, managers, employees, contractors, Downstream Entities, or any members or shareholders appear in the list of excluded individuals/entities as published by HHS' Office of the Inspector General (OIG List) or the GSA Excluded Parties List. Provider shall routinely, but no less than at hire and on a monthly basis, thereafter, review the referenced required lists to ensure that no officers, directors, managers, employees, contractors, Related Entities, and any members or shareholders are excluded or have become excluded from participation in Federal programs and shall report to Medicare Advantage Organization on the results of such exclusion checks as directed.

THIS AGREEMENT CONTAINS TRADE SECRETS CONFIDENTIAL AND PROPRIETARY TO OSCAR

2.10.2. Preclusion. Provider will not permit any Provider Entities or Employed Professional who has been precluded pursuant to 42 CFR § 422.2 to provide, order or prescribe Covered Services to Members. Oscar will not make any payments to Provider or any Provider Entities for services provided, ordered or prescribed by any Provider Entities or Employed Professional which has been precluded. For any Provider Entities or Employed Professional excluded during the term of this Agreement, after the expiration of the sixty (60) day period specified in 42 CFR § 422.222, Provider, Provider Entities and Employed Professionals, as applicable, will no longer be eligible for payment from Oscar and will be prohibited from pursuing payment from the Member as stipulated by the terms of Oscar's contract with CMS and 42 CFR §422.504(g)(1)(iv). Provider, Provider Entities and Employed Professionals will hold financial liability for services, items, and drugs that are furnished, ordered, or prescribed after this sixty (60) day period, at which point the Employed Professional or Affiliated Professional and Member will have already received notification of the preclusion pursuant to 42 CFR §422.504(g)(1)(v).

2.11. Oscar's Responsibilities Notwithstanding any relationships that Oscar may have with Provider, Provider Entities and Employed Professionals, Oscar maintains ultimate responsibility for adhering to and otherwise fully complying with all terms and conditions of its contract with the Centers for Medicare & Medicaid Services ("CMS"). Provider, Provider Entities and Employed Professionals shall participate in and comply with Oscar's Medicare Advantage/Part D oversight program, including but not limited to: attending meetings; providing attestations; responding to document, policy, and procedure review requests; implementing corrective action plans suggested by Oscar or CMS; participating in monitoring and reviews; and providing Oscar with similar information about Provider's Downstream Entities. [42 C.F.R. §§ 422.504(i)(1)]

2.12. Disclosure of Physician Incentive Plan Arrangements. Provider agrees to disclose to Oscar, upon request and within thirty (30) days or such lesser period of time required for Oscar to comply with all applicable state or federal laws, all of the terms and conditions of any payment arrangement that constitutes a "physician incentive plan" as defined by CMS and/or any federal law or regulation. Such disclosure should identify, at a minimum, whether services not furnished by the physician/provider are included, the type of incentive plan including the amount, identified as a percentage, of any withhold or bonus, the amount and type of any stop-loss coverage provided for or required of the physician/provider, and the patient panel size broken down by total group or individual physician/provider panel size, and by the type of insurance coverage (i.e., Commercial HMO, Medicare Advantage HMO, Medicare Advantage PPO, and Medicaid HMO).

2.13. Continuation of Care. Provider agrees to provide or arrange for continued treatment, including, but not limited to, medication therapy, to Medicare Advantage Members upon expiration or termination of the Agreement. In accordance with all applicable state and federal laws, rules and/or regulations, treatment must continue until the Member: (i) has been evaluated by a new participating provider who has had a reasonable opportunity to review or modify the Medicare Advantage Member's course of treatment, or until Oscar has made arrangements for substitute care for the Medicare Advantage Member; and (ii) until the date of discharge for Medicare Advantage Members on the effective date of termination or expiration of the Agreement.

THIS AGREEMENT CONTAINS TRADE SECRETS CONFIDENTIAL AND PROPRIETARY TO OSCAR

Provider agrees to accept as payment in full from Oscar for Covered Services rendered to Oscar's Medicare Advantage Members, the rates set forth in the payment attachment which are applicable to such Member.

2.14. Provision of Accurate Data. Provider agrees to provide to Oscar accurate and complete information regarding the provision of Covered Services by Provider to Members ("Data") on a complete CMS 1500 or UB 92 form, or their respective successor forms as may be required by CMS, or such other form as may be required by law when submitting claims and encounters in an electronic format, or such other format as is mutually agreed upon by both parties. The Data shall be provided to Oscar on or before the last day of each month for encounters occurring in the immediately preceding month, or such lesser period of time as may be required in the Agreement, or as is otherwise agreed upon by the parties in writing. The submission of the Data to Oscar and/or CMS shall include a certification from Provider that the Data is accurate, complete and truthful. In the event the Data is not submitted to Oscar by the date and in the form specified above, Oscar may, in its sole option, withhold payment otherwise required to be made under the terms of the Agreement until the Data is submitted to Oscar.

2.15. Downstream Entities. Provider and Provider Entities agree to maintain written agreements with their Downstream Entities providing services under the Agreement in a form comparable to, and consistent with, the terms and conditions of this Agreement. Provider's Downstream provider agreements shall include terms and conditions which comply with all applicable requirements for provider agreements under state and federal laws, rules and regulations including, without limitation, the Medicare Advantage rules, and regulations, and CMS or Medicare Agreement terms to which Oscar is subject. In the event of a conflict between the language of the Downstream provider agreements and the Agreement, the language in the Agreement shall control.

2.16. Other Requirements. Provider and Oscar will amend the Agreement and this Exhibit 7.4 to include an such other terms and conditions as CMS may find necessary and appropriate for this Agreement and the MA program. Oscar may incorporate such requirements by amending this Exhibit 7.4 on notice to Provider. [42 C.F.R. §§ 422.504(j)]

THIS AGREEMENT CONTAINS TRADE SECRETS CONFIDENTIAL AND PROPRIETARY TO OSCAR

TARRANT COUNTY
COMMISSIONERS COURT COMMUNICATION

Court Date: December 9, 2025	**Court Order #:**	**Page:** 1 of 18
Department: Public Health	**Prepared By:** Gary Collins, Contracts Specialist	**Approved By:** Amanda Campbell

SUBJECT:

Consideration of a Service Provider Agreement between Tarrant County and Dr. Daniel E. Rousch, DO, to Provide Psychiatric Services

*****CONSENT AGENDA *****

COMMISSIONERS COURT ACTION REQUESTED

It is requested that the Commissioners Court consider a service provider agreement between Tarrant County and Dr. Daniel E. Rousch, DO, to provide psychiatric services to clients of Tarrant County Public Health (TCPH).

BACKGROUND

TCPH Preventive Medicine Clinic (PMC) offers medical and case management services for adults living with HIV. As part of this patient care, psychiatric diagnosis, treatment, medication management, and counseling services are often needed.

On December 10, 2019, the Commissioner's Court, through Court Order #131782, approved a service provider agreement with Dr. Daniel E. Rousch, DO. The service provider agreement included two (2) twenty-four (24) month renewal options. The vendor renewed the service provider agreement for the first twenty-four (24) month renewal period thru December 31, 2021.

On March 24, 2020, the Commissioner's Court through Court Order #132465, approved Amendment No. 1 to the service provider agreement with Dr. Daniel E. Rousch, DO. This agreement corrected the CPT codes in paragraph 2.a to 99205 and 90792 be used for billing purposes.

On November 23, 2021, the Commissioner's Court, through Court Order #136936, approved renewal of service provider agreement with Dr. Daniel E. Rousch, DO. The service provider agreement included two (2) twenty-four (24) month renewal options.

On December 19, 2023, the Commissioners' Court, through Court Order #142330, approved renewal of the service provider agreement with Dr. Daniel E. Rousch, DO, fulfilling the final twenty-four (24) month renewal. The service provider has notified Tarrant County Public Health of his desire to renew the service provider agreement for the first twenty-four (24) month renewal period.

With approval of the service provider agreement TCPH PMC will continue to utilize Dr. Daniel E. Rousch for psychiatric services. The contract term begins with a fully executed contract through December 31, 2027, and includes two (2) twenty-four (24) month renewal options. Services are not to exceed $20,000.00 annually. For billing purposes, CPT codes 90792 and 99213 will be utilized.

The Criminal District Attorney's Office has reviewed this agreement as to form.

FISCAL IMPACT

Funding in the amount of $20,000.00 is available in accounts GRTPI-2004 Grant Related Program Income / F0028-2026 Ryan White Part A / 5100904000 Public Health / 569011 Professional Services and Grant-2004/ F0028-2026 Ryan White Part A / 5100904000 Public Health /569011 Professional Services.

PASSED AND APPROVED on December 9, 2025.

COUNTY OF TARRANT
STATE OF TEXAS

By: Separate Electronic Signature Page
Tim O'Hare
County Judge

APPROVED AS TO FORM:

_____
District Attorney's Office*

*By law, the District Attorney's Office may only approve contracts for its clients. We reviewed this document as to form from our client's legal perspective. Other parties may not rely on this approval. Instead, those parties should seek contract review from independent counsel.

Attachments

ROUSCH_Service Provider Agreement.pdf

SERVICE PROVIDER AGREEMENT
Between Tarrant County and Dr. Daniel Rousch

This agreement is by and between Tarrant County **(COUNTY)**
and Dr Daniel Rousch D.O.
(SERVICE PROVIDER)

Term: This agreement shall be in effect from the date of the award and will expire on December 31, 2027. At **COUNTY'S** option and approval by the **SERVICE PROVIDER**, the contract may be renewed for two (2) additional twenty-four (24) month periods.

1. SERVICE PROVIDER RESPONSIBILITIES

SERVICE PROVIDER will provide psychiatric diagnostic and therapeutic services for referred patients of the Tarrant County Public Health Department (TCPH), which may include diagnosis, treatment and/or medication therapy services as needed.

SERVICE PROVIDER should have current experience, or similar experience, providing services to adults living with HIV.

SERVICE PROVIDER will have current, valid Texas Licensure for all clinical personnel involved in the diagnosis and treatment of a patient as appropriate. And will provide copies, when requested, to TCPH.

- Psychiatrist: Current, valid Texas Medical License and qualified by education and clinical training in psychiatry with certification by American Board of Psychiatry and Neurology.

SERVICE PROVIDER will provide copies of malpractice insurance certificates for all Providers used under this contract. Please submit these certificates by secure fax to: 682-255-3976

SERVICE PROVIDER will not accept patients, under this contract, without a referral from TCPH.

SERVICE PROVIDER should provide the services in a group or individual setting.

SERVICE PROVIDER may provide services at the Service Provider's office, or Tarrant County, or via tele-heath or tele-medicine.

SERVICE PROVIDER will periodically require saliva or urine drug screens for clients needing controlled substances.

SERVICE PROVIDER may use supervised clinicians to conduct portions of the diagnostic and therapeutic services, provided that the mental health professional with the direct appointment does meet directly with the patient and is ultimately responsible for the evaluation and final

report. The final report should specify any portions of the evaluation conducted by a supervised clinician as well as providing the name, title, and credentials of that person.

SERVICE PROVIDER must maintain and release assessment and treatment records in compliance with applicable local, state and federal laws. This includes the release of information necessary to meet the National RWHAP Part A mental health monitoring standards.

SERVICE PROVIDER may release a copy of progress/visit notes/medical records to the client per the PROVIDER'S release and privacy policies, as permitted by law.

SERVICE PROVIDER In order to facilitate clear communication to the various audiences of these evaluations, the following general format should be followed. While there may be modifications needed according to the specific referral questions or specific issues relevant to the patient, these general report sections should be included, and appropriate sub-headings should be used within the sections.

PMC provides Mental Health services to PLWH. These services are the provision of outpatient psychological and psychiatric screening, assessment, diagnosis, treatment, and counseling services. National monitoring standards for the RWHAP Part A, state that each eligible client receiving mental health services will have the following:

Comprehensive Mental Health Provider Record Template

1. REASON FOR REFERRAL

State the reason the client was referred for mental health services. Include referral source (e.g., primary care provider, case manager, self-referral).

Attach client orientation documentation:

- Services available
- Clinic hours and emergency procedures
- Contact methods
- Appointment scheduling
- Client/agency responsibilities
- Client rights and grievance process
- Behavioral expectations and suspension policy

2. ASSESSMENT PROCEDURES / SOURCES OF INFORMATION

- Clinical interviews (dates and providers)
- Standardized screening tools used

- Collateral sources (e.g., family, caseworkers, medical records)
- Orientation acknowledgment form (signed)
- Mental health assessment completed by 3rd session

3. BACKGROUND INFORMATION

a) Psychiatric Review of Systems Document symptoms across mood, anxiety, psychotic, cognitive, and behavioral domains

b) Psychiatric Treatment History Prior diagnoses, providers, medications, hospitalizations, therapy types

c) Substance Abuse History Substances used, frequency, duration, treatment history, impact on functioning

d) Identifying Data and Family History Demographics, cultural background, family mental health history

e) Developmental and Social History Milestones, education, employment, military service, relationships, leisure activities

f) History of Presenting Problems Onset, duration, severity, triggers, previous coping strategies

g) Medical History Chronic conditions, surgeries, hospitalizations, current medications

3A. PROVIDER PROGRESS NOTES

Mental Health Visit/Progress Notes are to be completed according to the agency's standardized format and must include:

- **Client Name** Record the full legal name of the client.
- **Session Date** Indicate the date the session occurred.
- **Focus of the Session** Describe the primary topic, concern, or therapeutic goal addressed during the session.
- **Interventions Used** List clinical techniques, strategies, or modalities applied (e.g., CBT, motivational interviewing, psychoeducation).
- **Progress on Treatment Goals** Summarize the client's movement toward established goals, including any measurable outcomes or behavioral changes.
- **Newly Identified Issues/Goals (if applicable)** Note any emerging concerns or goals discussed during the session that may require updates to the treatment plan.
- **Counselor Signature and Credentials** Include the full name, professional designation (e.g., LPC, LCSW), and signature of the provider rendering services.

4. TEST RESULTS (IF APPLICABLE)

- Neuropsychological testing
- Psychiatric evaluations
- Lab results
- Screening scores (e.g., PHQ-9, GAD-7)

5. DIAGNOSIS (ICD-10 CM / F01 to F99)

- Primary diagnosis
- Secondary diagnoses (if applicable)
- Diagnostic justification based on assessment findings

6. SUMMARY AND RECOMMENDATIONS

Summary:

- Synthesis of assessment findings
- Client strengths and challenges
- Risk assessment outcomes

Recommendations:

- Initiate individual therapy (weekly sessions)
- Refer for psychiatric evaluation for medication management
- Provide psychoeducation on diagnosis and coping strategies
- Engage family in treatment planning (if applicable)
- Reassess progress in 90 days
- Consider referral to day treatment program if symptoms persist
- Document all referrals in treatment plan or progress notes
- Begin discharge planning when goals are met or upon non-attendance

2. COUNTY RESPONSIBILITIES

COUNTY will reimburse **SERVICE PROVIDER** based on the following fee schedule

a) **COUNTY** will pay for services provided to patients with no insurance at $400.00 for CPT code 90792, and $200.00 for CPT code 99213.

	Evaluation and Management
CPT Code	Name
90792	Psychiatric Diagnostic Evaluation with Medical Services
99213	Established patient or outpatient services

b) **COUNTY** will pay SERVICE PROVIDER within thirty (30) days of receipt of invoice when the SERVICE PROVIDER satisfies the following conditions.

i. **SERVICE PROVIDER** will bill for services performed in accordance with this contract.

ii. **SERVICE PROVIDER** has billed using only clinical personnel for which Tarrant County has received a copy of Curriculum Vita, a copy of current Texas Professional License, and Certificate of Insurance coverage prior to date of service.

iii. **SERVICE PROVIDER** should submit a separate monthly itemized invoice/statement to the following secure fax number. Each invoice should include:

- Agency letterhead
- Invoice date and invoice number
- CPT code with date of service, patient name and date of birth, CPT code, and who conducted the session.
- Amount of each service with a total at the bottom.
- If a request includes payment for an individual's copayments or deductible amounts, the requesting party shall also provide a copy of the applicable Explanation of Benefits (EOB) issued by the insurance carrier, clearly indicating the remaining balance owed.
    - Invoices and documentation must be directed to:
        - Fax: 682-255-3976
        - Tarrant County Public Health
        - Attn: Melody Cordell

3. CONFIDENTIALITY OF PATIENT RECORDS

All patient records of services provided to a patient of TCPH **SERVICE PROVIDER** are the property of **SERVICE PROVIDER**. Confidentiality of patient records will be maintained at all times as required by applicable law and the terms of this contract. **SERVICE PROVIDER** will have a system in order to protect from inappropriate disclosure of patient records and all other documents deemed confidential by law which are maintained in connection with the activities funded under this contract. Any disclosure of confidential patient information by **SERVICE PROVIDER**, including information required by the Inspections Section, will be in accordance with applicable law.

SERVICE PROVIDER agrees to waive subrogation against Tarrant County, its officers, employees, and elected representatives for injuries, including death, property damage, or any other loss to the extent the loss, if any, is covered by the proceeds of insurance.

SERVICE PROVIDER is responsible for making sure any sub-contractor(s) performing work under this agreement has the required insurance coverage(s).

SERVICE PROVIDER agrees that all persons providing a service under this agreement will commit no damage to **COUNTY'S** facilities/property and that if such damage occurs, **SERVICE PROVIDER** will reimburse **COUNTY** the cost of repair.

SERVICE PROVIDER agrees to indemnify, defend and hold harmless COUNTY, its agents, servants, employees, trustees, officers and representatives from any liability, loss, or damage which COUNTY may suffer as a result of any claims, demands, costs, actions, causes of actions, or judgments, including attorneys' fees, asserted against or incurred by COUNTY arising out of, during, or as a result of SERVICE PROVIDER using COUNTY'S facilities, except such liability, loss or damage which is the result of or arising out of the sole negligence of COUNTY.

4. INSURANCE

SERVICE PROVIDER agrees to take out, pay for and maintain at all times during the performance of the work under the agreement, the following forms of insurance, in carriers acceptable to and approved by County:

a) Commercial General Liability:

i. Bodily Injury/Personal Injury/Property Damage- $1,000,000 per occurrence/$2,000,000 aggregate

5. COMPLIANCE

While providing the agreed service, **SERVICE PROVIDER** agrees to comply with all applicable laws, rules and regulations and the rules and regulations of **COUNTY** and any special instructions given to **SERVICE PROVIDER** by representative(s) of **COUNTY**.

6. NO WAIVER OF IMMUNITY

This Agreement does not waive COUNTY rights under a legal theory of sovereign immunity. This Agreement does not waive CITY rights under a legal theory of sovereign immunity.

7. INSPECTION

Authorized representatives of local, state or federal government have the right, at all reasonable times, to inspect or otherwise evaluate the work performed or being performed hereunder and the premises in which it is being performed. Service Provider(s) will participate in and provide reasonable access, facilities and assistance for the representatives. All inspections and evaluations will be performed in such a manner as will not unduly delay the work or violate the privacy of the patient.

8. CONSENT

While providing the agreed service, **SERVICE PROVIDER** agrees to comply with all applicable laws, rules and regulations and the rules and regulations of **COUNTY** and any special instructions given to **SERVICE PROVIDER** by representative(s) of **COUNTY**.

9. THIRD PARTY

The parties do not enter into this contract to protect any specific third party. The intent of this contract excludes the idea of a suit by a third-party beneficiary.

10.JOINT VENTURE & AGENCY

The relationship between the parties to this contract does not create a partnership or joint venture between the parties. This Agreement does not appoint any party as agent for the other party.

11. EFFECTIVE DATE

This agreement becomes effective when signed by the last party whose signing makes the agreement fully executed.

12. NOTICES

All notices required to be given under this Agreement shall be addressed as follows and delivered by certified mail, postage prepaid or by hand delivery:

13. ASSIGNMENT

VENDOR may not assign or subcontract any of its rights, duties, and/or obligations arising out of this Agreement without prior written consent of COUNTY which consent shall not be unreasonably withheld.

14. CONFIDENTIALITY OF INFORMATION AND DATA & REQUIRED DISCLOSURE

Both parties are responsible for responsible for protecting and preserving the confidentiality, integrity and availability of the information and data of the other party if they access it. Notwithstanding the foregoing, both parties agree Confidential Information or Data will not include information that belongs to the County or is (i) already known by County without an obligation of confidentiality other than under this Agreement; (ii) publicly known or becomes publicly known through no unauthorized act of the County; (iii) rightfully received from a third party under no duty of confidentiality; (iv) independently developed by the County without use of the Vendor's Confidential Information; (v) disclosed without similar restrictions to a third party by Vendor; (vi) approved by the Vendor for disclosure; or (vii) required to be disclosed pursuant to a requirement of a governmental agency or law, or any governmental or political subdivision thereof, so long as the party required to disclose the information provides the other party with timely notice to the Vendor prior to disclosure to such governmental agency.

15. TERMINATION

This Agreement may be terminated for convenience by the either party upon written thirty (30) days' notice prior to cancellation.

16. APPLICABLE LAW

This Agreement shall be construed under and in accordance with the laws of the State of Texas, and all obligations of the parties created hereunder are performable in Tarrant County, Texas.

17. VENUE

Exclusive venue for any litigation arising from this Agreement shall be in the district and federal courts physically located in Fort Worth, Texas.

18. FISCAL FUNDING ACKNOWLEDGEMENT

SERVICE PROVIDER acknowledges COUNTY is a governmental entity and agrees COUNTY may terminate for future fiscal years if. services are not funded for any year subsequent to the initial year of this Agreement.

19. AMENDMENTS

The parties may only amend this Agreement by subsequent written amendments.

20. LEGAL CONSTRUCTION

In case any one or more of the provisions contained in the Agreement shall for any reason be held to be invalid, illegal, or unenforceable in any respect, such invalidity, illegality or unenforceable provision shall not affect any other provision thereof and this Agreement shall be construed as if such invalid, illegal, or unenforceable provision had never been contained therein.

21. CERTIFICATE OF INTERESTED PARTIES

SERVICE PROVIDER acknowledges and agrees that it has fully, accurately, and completely disclosed all interested parties in Form 1295, and has acknowledged the completeness of this disclosure by filing Form 1295, certified to as shown in **Attachment A**, with the Texas Ethics Commission as required by law.

Execution of Agreement. This agreement may be executed in one or more counterparts, each of which will be deemed to be an original copy of this agreement, and all of which, when taken together, shall be deemed to constitute one and the same agreement. The exchange of copies of this agreement and of signature pages by electronic transmission shall constitute effective execution and delivery of this agreement to the parties and may be used in lieu of the original agreement for all purposes. Signatures of the parties transmitted or executed electronically shall be deemed to be their original signatures for any purpose whatsoever.

Dated this 7th day of November, 2025.

Dr. Daniel Rousch D.O.
("SERVICE PROVIDER")

Tarrant County ("COUNTY")

By: _____
Dr. Daniel Rousch D.O.

By: See Separate Electronic Signature Page
Tim O'Hare, County Judge

DANIEL ROUSCH DO
Printed Name & Title of Representative

11/7/25
Date

SIGNED AND EXECUTED this _____ day of _____, 2025.

COUNTY OF TARRANT
STATE OF TEXAS

By: Separate Electronic Signature Page
Tim O'Hare
County Judge

APPROVED AS TO FORM:

Kimberly Colliet Wesley
Criminal District Attorney's Office*

*By law, the Criminal District Attorney's Office may only approve contracts for its clients. We reviewed this document as to form from our client's legal perspective. Other parties may not rely on this approval. Instead, those parties should seek contract review from independent counsel.

CERTIFICATION OF FUNDS IN THE AMOUNT OF $_____

_____ Date: _____
Auditor

Debarment/suspension certification indicating that you are in compliance with the below Federal Executive Order.

Debarment:
Federal Executive Order (E.O.) 12549 "Debarment and Suspension" requires that all contractors receiving individual awards, using federal funds, and all sub-recipients certify that the organization and its principals are not debarred, suspended, proposed for debarment, declared ineligible, or voluntarily excluded by any Federal department or agency from doing business with the Federal Government.

Your signature certifies that neither you or your principal is presently debarred, suspended, proposed for debarment, declared ineligible, or voluntarily excluded from participation in this transaction by any federal department or agency.

DANIEL ROESCH DO (Name)
midcities psychiatric center (Company) MCPC
1236 Southridge ct #2.1 (Address)
Hurst, Tx 76053 (Address)
(DUNS Number)

PHONE 817-585-1802 FAX 817-354-2118
EMAIL info@midcitypsych.com

Signature 11/7/25 Date

CERTIFICATE OF INTERESTED PARTIES

FORM 1295

Complete Nos. 1 - 4 and 6 if there are interested parties.
Complete Nos. 1, 2, 3, 5, and 6 if there are no interested parties.

OFFICE USE ONLY
CERTIFICATION OF FILING

Certificate Number:
2025-1386711

Date Filed:
11/07/2025

Date Acknowledged:

1 Name of business entity filing form, and the city, state and country of the business entity's place of business.
Mid Cities Psychiatric Center
Hurst, TX United States

2 Name of governmental entity or state agency that is a party to the contract for which the form is being filed.
Tarrant County Public health

3 Provide the identification number used by the governmental entity or state agency to track or identify the contract, and provide a description of the services, goods, or other property to be provided under the contract.
2025-463152842-psychiatry
psychiatric care

4 Name of Interested Party	City, State, Country (place of business)	Nature of interest (check applicable)	
		Controlling	Intermediary

5 Check only if there is NO Interested Party. [X]

6 UNSWORN DECLARATION

My name is DANIEL Rousch, and my date of birth is 4-6-67.

My address is 1236 Southridge Ct #201, Hurst, TX, 76053, USA.
(city) (state) (zip code) (country)

I declare under penalty of perjury that the foregoing is true and correct.

Executed in Tarrant County, State of TX, on the 7 day of November 2025.
(month) (year)

Signature of authorized agent of contracting business entity
(Declarant)

Vendor Certification Addendum to Tarrant County Contracts Entered into on or After September 1, 2021 Required by New Texas State Laws [Not required if all contracting parties are governments]

This Addendum relates to the following contract: Mid Cities Psychiatric Center, Dr. Daniel Rousch, D.O.

FISCAL FUNDING ACKNOWLEDGMENT
Notwithstanding any language to the contrary, Vendor acknowledges TARRANT COUNTY is a governmental entity and agrees TARRANT COUNTY (customer) may terminate this Agreement for future fiscal years if sufficient funding is not appropriated or allocated.

LEGAL COMPLIANCE
In providing the services required by this Agreement, Vendor must observe and comply with all applicable federal, state, and local statutes, ordinances, rules, and regulations, including, without limitation, workers' compensation laws, minimum and maximum salary and wage statutes and regulations, and non- discrimination laws and regulations. Vendor shall be responsible for ensuring its compliance with any laws and regulations applicable to its business, including maintaining any necessary licenses and permits.

For All County Contracts Entered into on or after September 1, 2021, Vendor Must Certify:

Vendor is EXEMPT from Certification regarding Energy Companies and Firearm Entities or Firearm Trade Associations:

Vendor is a sole proprietorship OR is a non-profit entity OR Vendor is a company that does NOT have 10 or more full-time employees AND/OR this contract does NOT have a value of $ 100,000.00 or more that is to be paid wholly or partly from public funds of the governmental entity.

If the Vendor Cannot Certify that it is EXEMPT as Above, Vendor Must Certify as Follows:

Vendor is NOT EXEMPT and Certifies as follows:

Boycott of Energy Companies Prohibited. In compliance with Section 2274.002 of the Texas Government Code (added by 87th Legislature, S.B. 13), Vendor verifies that it does not boycott energy companies and will not boycott energy companies during the term of the above-described contract. "Boycott energy company" is defined in Section 809.001(1) (added by 87th Legislature, S.B. 13) and means, without an ordinary business purpose, refusing to deal with, terminating business activities with, or otherwise taking any action that is intended to penalize, inflict economic harm on, or limit commercial relations with a company because the company: (A) engages in the exploration, production, utilization, transportation, sale, or manufacturing of fossil fuel-based

energy and does not commit or pledge to meet environmental standards beyond applicable federal and state law; or (B) does business with a company described by subsection (A).

Discrimination against Firearm Entities or Firearm Trade Associations Prohibited. In compliance with Section 2274.002 of the Texas Government Code (added by 87th Legislature, S.B. 19), Vendor verifies that it does not have a practice, policy, guidance, or directive that discriminates against a firearm entity or firearm trade association; and will not discriminate during the term of the above- described contract] against a firearm entity or firearm trade association. "Discriminate against a firearm entity or firearm trade association" is defined in Section 2274.001(3) (added by 87th Legislature, S.B. 19) and means, with respect to the entity or association, to: (i) refuse to engage in the trade of any goods or services with the entity or association based solely on its status as a firearm entity or firearm trade association; (ii) refrain from continuing an existing business relationship with the entity or association based solely on its status as a firearm entity or firearm trade association; or (iii) terminate an existing business relationship with the entity or association based solely on its status as a firearm entity or firearm trade association; the term *does not include*:
(i) the established policies of a merchant, retail seller, or platform that restrict or prohibit the listing or selling of ammunition, firearms, or firearm accessories; and (ii) a company's refusal to engage in the trade of any goods or services, decision to refrain from continuing an existing business relationship, or decision to terminate an existing business relationship: (aa) to comply with federal, state, or local law, policy, or regulations or a directive by a regulatory agency; or (bb) for any traditional business reason that is specific to the customer or potential customer and not based solely on an entity's or association's status as a firearm entity or firearm trade association.

Vendor Hereby Certifies (Mark Applicable Certification):

X Vendor is EXEMPT from Certification as set out above.

_____ Vendor is NOT EXEMPT from Certification as set out above, and Vendor Certifies that it does not and will not Boycott Energy Companies and that it does not and will not engage in prohibited Discrimination against Firearm Entities or Firearm Trade Associations.

CERTIFIED by: _____

_____ Signature of Certifying Person

DANIEL R. VSC Printed Name of Certifying Person

CO Title of Certifying Person

MCPC Name of Vendor Company/Organization

11/7/25 Date Certified

TARRANT COUNTY
COMMISSIONERS COURT COMMUNICATION

Court Date: December 16, 2025	**Court Order #:**	**Page:** 1 of 5
Department: Purchasing	**Prepared By:** Erin N. Dawdy	**Approved By:** Christopher Lax, CPSM, CPSD, CPCP

SUBJECT:

RFO No. F2026036 - Purchase of Palo Alto Premium Support Renewals- #DIR-CPO-4846 - Information Technology - Kudelski Security, Inc.

***** CONSENT AGENDA *****

COMMISSIONERS COURT ACTION REQUESTED

It is requested that the Commissioners Court award RFO No. F2026036, Purchase of Palo Alto Premium Support Renewals, utilizing the State of Texas Department of Information Resources (DIR) Contract #DIR-CPO-4846, for Information Technology, to Kudelski Security for $147,950.24.

BACKGROUND

Nine hundred nine (909) vendors were contacted and requested to submit written offers for RFO No. F2026036, Purchase of Palo Alto Premium Support Renewals, for Information Technology, under DIR Contract #DIR-CPO-4846.

Two (2) offers and four (4) no-bids were received. The offers were evaluated by Information Technology and Purchasing representatives. The offer received from Kudelski Security, Inc. meets all specifications and is acceptable to Information Technology.

Palo Alto Premium Support Renewals provides a network security platform to help organizations prevent cyber breaches. This software provides Information Technology IOS updates on firewall appliances and scheduled hourly update reports of applications and threats that help protect the network.

Kudelksi Security, Inc. offers the services through the State of Texas DIR Contract #DIR-CPO-4846.

The DIR contract is effective through January 25, 2027.

The term of the contract is twelve (12) months, effective January 12, 2026.

DIR's cooperative contracts program is open for state and local government in accordance with Texas Government Code Title 10, Subtitle B, Chapter 2054, Subchapter A, Section 2054.0565, Use of Contracts by Other Entities, "(a) The department may include terms in a procurement contract entered into by the department, including a contract entered into under Section 2157.068, that allow the contract to be used by another state agency, a political subdivision of this state, a governmental entity of another state, or an assistance organization as defined by Section 2175.001. (b) A political subdivision that purchases an item or service using a contract under this section satisfies any other law requiring the political subdivision to seek competitive bids for that item or service".

FISCAL IMPACT:

Funding in the amount of $147,950.24 is avaliable in the following accounts:

10000-2026 General Fund/1810201000 Network Oper/Communication/578021 Hardware Maintenance
10000-2026 General Fund/1810500000 Disaster Mgmt/Business Cont./578021 Hardware Maintenance

Attachments

F2026036 Backup.pdf

						Award			
						Kudelski Security, Inc. Phoenix, AZ HUB: No CO-OP: Yes		Axelliant LLC Torrance, CA HUB: No	
						Total Price	**$147,950.24**	Total Price	$164,926.14
Line #	**Description**	**Mfgr**	**Mfgno**	**QTY**	**UOM**	**Unit**	**Extended**	Unit	Extended
1	Premium Support renewal Panorama 25 devices Serial #000702231887 Term: 1/12/2025 - 1/12/2026	Palo Alto	PAN-SVC-PREM-PRA-25-R	1	EA	**$2,071.84**	**$2,071.84**	$2,191.62	$2,191.62
2	Premium Support Renewal, PA-5220 Serial #013201001243 Term: 1/12/2025 - 1/12/2026	Palo Alto	PAN-SVC-PREM-5220-R	1	EA	**$10,837.60**	**$10,837.60**	$11,464.11	$11,464.11
3	Palo Alto Networks: Advanced WildFire subscription for device in an HA pair renewal, PA-5220 Serial #013201001243 Term: 1/12/2025 - 1/12/2026	Palo Alto	PAN-PA-5220-AWF-HA2-R	1	EA	**$12,816.00**	**$12,816.00**	$14,609.76	$14,609.76
4	Palo Alto Networks: Advanced Threat Prevention subscription for device in HA pair renewal, PA-5220 Serial #013201001243 Term: 1/12/2025 - 1/12/2026	Palo Alto	PAN-PA-5220-ATP-HA2-R	1	EA	**$12,816.00**	**$12,816.00**	$14,609.76	$14,609.76
5	Premium support renewal, PA-5220 Serial #013201001438 Term: 1/12/2025 - 1/12/2026	Palo Alto	PAN-SVC-PREM-5220-R	1	EA	**$10,837.60**	**$10,837.60**	$11,464.11	$11,464.11
6	Palo Alto Networks: Advanced WildFire subscription for device in HA pair renewal, PA-5220 Serial #013201001438 Term: 1/12/2025 - 1/12/2026	Palo Alto	PAN-PA-5220-AWF-HA2-R	1	EA	**$12,816.00**	**$12,816.00**	$14,609.76	$14,609.76
7	Palo Alto Networks: Advanced Threat Prevention subscription for device in an HA pair renewal, PA-5220 Serial #013201001438 Term: 1/12/2025 - 1/12/2026	Palo Alto	PAN-PA-5220-ATP-HA2-R	1	EA	**$12,816.00**	**$12,816.00**	$14,609.76	$14,609.76
8	Premium support renewal, PA-5220 Serial #013201011180 Term: 1/12/2025 - 1/12/2026	Palo Alto	PAN-SVC-PREM-5220-R	1	EA	**$10,837.60**	**$10,837.60**	$11,464.11	$11,464.11
9	Palo Alto Networks: Advanced Threat Prevention subscription for device in an HA pair renewal, PA-5220 Serial #013201011180 Term: 1/12/2025 - 1/12/2026	Palo Alto	PAN-PA-5220-ATP-HA2-R	1	EA	**$12,816.00**	**$12,816.00**	$14,609.76	$14,609.76
10	Palo Alto Networks: Advanced WildFire subscription for device in an HA pair renewal, PA-5220 Serial #013201011180 Term: 1/12/2025 - 1/12/2026	Palo Alto	PAN-PA-5220-AWF-HA2-R	1	EA	**$12,816.00**	**$12,816.00**	$14,609.76	$14,609.76
11	Premium support renewal, PA-5220 Serial #013201019236 Term: 1/12/2025 - 1/12/2026	Palo Alto	PAN-SVC-PREM-5220-R	1	EA	**$10,837.60**	**$10,837.60**	$11,464.11	$11,464.11
12	Palo Alto Networks: Advanced Threat Prevention subscription for device in an HA pair renewal, PA-5220 Serial #013201019236 Term: 1/12/2025 - 1/12/2026	Palo Alto	PAN-PA-5220-ATP-HA2-R	1	EA	**$12,816.00**	**$12,816.00**	$14,609.76	$14,609.76
13	Palo Alto Networks: Advanced WildFire subscription for device in an HA pair renewal, PA-5220 Serial #013201019236 Term: 1/12/2025 - 1/12/2026	Palo Alto	PAN-PA-5220-AWF-HA2-R	1	EA	**$12,816.00**	**$12,816.00**	$14,609.76	$14,609.76

Note: Four (4) No-bids were received from GOOGOZ.COM, 3-C Technology, SecurityScorecard, and BUI Consulting

INFORMATION TECHNOLOGY
Empowering Innovation
Driving Excellence

Chief Information & Artificial Intelligence Officer
André Mendes

Chief Administrative Officer
Cecilia Webb

Chief Information Security Officer
Russell Scott

Deputy CIO Cloud, Infrastructure & Operations
Anthony Jackson

Deputy CIO Enterprise Applications
Michael Webb

Assistant CIO Governance
Adepeju Ajunwon

Assistant CIO Organizational Change Management & Support Services
Carolyn J. Bogan

Our vision is to be the best IT organization in state and local government within the United States.

200 Taylor Street
Fort Worth, TX 76196

Phone: 817.884.3888
Fax: 817.212.3060

www.tarrantcountytx.gov

11/18/2025

Erin Dawdy
Senior Buyer
100 E. Weatherford Street, Suite 303
Fort Worth, Texas 76196

Re: F2026036 – Purchase of Palo Alto Premium Support Renewal

Dear Ms. Dawdy:

After evaluation of the information provided in the responses, Tarrant County Information Technology Department recommends award of bid F2026036 to Kudelski SA.

Very sincerely,

Anthony Jackson
Anthony Jackson (11/18/2025 16:45:23 CST)

Anthony Jackson
Deputy CIO Cloud, Infrastructure & Operations

TAKINGS IMPACT ASSESSMENT CHECKLIST

Complete this form for any county action that involves the adoption of a regulation, policy, guideline, court resolution, or order.

Project/Regulation Name: RFO No.F2026036 – Purchase of Palo Alto Premium Support Renewal - #DIR-CPO-4846 - Information Technology – Kudelski Security, Inc.

County Department: PURCHASING

Contact Person: Melissa Lee, C.P.M., A.P.P.

Phone Number for Contact Person: (817) 884-3245

Type of TIA Performed: (SHORT TIA) or FULL TIA. Circle one after answering the questions in Sections II and III below.

****

I. Stated Purpose

Attach to this checklist an explanation of the purpose of the regulation, policy, guideline, court resolution or order.

****

Note: The remainder of this Takings Impact Assessment Checklist should be completed in consultation with the Criminal District Attorney's Office.

II. Potential Effect on Private Real Property

1. Does the county action require a physical invasion, occupation or dedication of real property?

   Yes_____ No √

2. Does the county action limit or restrict a real property right, even partially or temporarily?

   Yes_____ No √

If you answered yes to either question, go to Section III. If you answered no to both, STOP HERE and circle SHORT TIA at the top of the form.

****

TARRANT COUNTY
COMMISSIONERS COURT COMMUNICATION

Court Date: December 16, 2025	**Court Order #:**	**Page:** 1 of 5
Department: Purchasing	**Prepared By:** Wanyu Chen	**Approved By:** Christopher Lax, CPSM, CPSD, CPCP

SUBJECT:

Approval of Exemption from Competitive Bidding Requirements - Purchase of Reagents, Controls, Equipment Parts, and Proficiency Testing Materials - Public Health - Various Vendors

***** CONSENT AGENDA *****

COMMISSIONERS COURT ACTION REQUESTED

It is requested that the Commissioners Court approve an exemption from Competitive Bidding Requirements for the Purchase of Reagents, Controls, Equipment Parts, and Proficiency Testing Materials, for Public Health. The vendors that provide these supplies are the following:

Bio-Rad Laboratories, Inc.	Supplies, reagents, and controls
College of American Pathologists	Proficiency testing materials
Hardy Diagnostics	Reagents and supplies
IDEXX Distribution, Inc.	Supplies, reagents, and controls
Integrated DNA Technologies	Reagents
Life Technologies Corporation	Supplies, reagents, controls, and equipment parts
Phenova, Inc.	Proficiency testing materials
Qiagen LLC	Controls and reagents
Revvity, Inc.	Supplies, reagents, controls, and equipment parts
Roche Diagnostics Corporation	Supplies, reagents, controls, and equipment parts
Wisconsin State Laboratory of Hygiene	Proficiency testing materials

BACKGROUND

Under the County Purchasing Act. exemptions to the competitive bidding requirements are allowed for certain types of purchases. State bidding statute, Section 262.024(a)(2) deals with those exemptions allowable when approved by the Commissioners Court.

The Public Health Department provided a letter of explanation, citing regulatory agency-established protocols which dictate the use of specific reagents and controls and participation in proficiency testing.

The exemption is twelve (12) months, effective March 7, 2026 through March 6, 2027.

Therefore, it is the joint recommendation of Public Health and Purchasing that the Commissioners Court grant an exemption from Competitive Bidding Requirements for Purchase of Reagents, Controls, Equipment Parts, and Proficiency Testing Materials.

FISCAL IMPACT

Expenses for the last twelve (12) months were $409,285.30. Funding is available in the following accounts:

T0400-2026 Public Health/5100011000 Public Health/521061 Lab Supplies
F0038-2026 DSHS-Bureau of STD/HIV Prevention/5100011000 Public Health/521061 Lab Supplies
F0042-2026 DSHS-CPS-Bioterrorism Preparedness - LAB CPS/LRN-PHEP/5100011000 Public Health/521061 Lab Supplies
F0043-2026 DSHS-CPS-Bioterrorism Preparedness/5100011000 Public Health/521061 Lab Supplies
F0054-2026 DSHS-Infectious Disease Control Unit/FLU-LAB/5100011000 Public Health/521061 Lab Supplies
F0071-2026 DSHS-Milk & Dairy Products Division/Fee for Service/5100011000 Public Health/521061 Lab Supplies
F0105-2026 DSHS-STD/HIV Disease Intervention Specialist/5100011000 Public Health/521061 Lab Supplies
F0108-2026 CDC Public Health Infrastructure, Workforce, Data Modernization Program/5100011000 Public Health/521061 Lab Supplies

Attachments

Backup.pdf

All 1295.pdf

Public Health

W. BRIAN BYRD, M.D., Local Health Authority & Health Director CATHERINE A. COLQUITT, M.D., Medical Director

October 13, 2025

Melissa Lee, C.P.M., A.P.P.
Tarrant County Purchasing Agent 100
East Weatherford, Suite 303
Fort Worth, Texas 76196

Dear Ms. Lee:

The North Texas Regional Laboratory (NTRL) is requesting that the following vendors be exempted from the competitive bid process because of the special needs of the laboratory.

Bio-Rad Laboratories, Inc.	Supplies, reagents, and controls
College of American Pathologists	Proficiency testing materials
Hardy Diagnostics	Reagents and supplies
IDEXX Distribution, Inc.	Supplies, reagents, and controls
Integrated DNA Technologies	Reagents
Life Technologies Corporation	Supplies, reagents, controls, and equipment parts
Phenova, Inc.	Proficiency testing materials
Revvity, Inc.	Supplies, reagents, controls, and equipment parts
Qiagen LLC	Controls and reagents
Roche Diagnostics Corporation	Supplies, reagents, controls, and equipment parts
Wisconsin State Laboratory of Hygiene	Proficiency testing materials

The NTRL receives public health emergency preparedness funding for participating in the Centers for Disease Control and Prevention's Laboratory Response Network (LRN). To participate in the LRN our laboratory must complete a requalification process annually. One of the requalification requirements states that "Our laboratory agrees to adhere to the LRN-established standard testing algorithm or method within each agent-specific protocol and agrees to use LRN standardized reagents/analytical materials and controls when testing for and reporting on the designated biological and/or chemical threat agent." To ensure the validity of our biological threat testing, the NTRL must strictly adhere to the LRN test protocols.

The NTRL also performs certain clinical diagnostic and infectious disease surveillance tests by using test methods developed in-house. The Clinical Laboratory Improvement Amendments (CLIA)

program published the final rule on the laboratory requirements relating to quality systems in 42 CFR Part 493 on January 24, 2003. In section 493.1253(b)(2) Establishment of performance specifications, the CLIA regulations state that "Each laboratory that modifies an FDA-cleared or approved test system, or introduces a test system not subject to FDA clearance or approval (including methods developed in-house and standardized methods such as text book procedures, or uses a test system in which performance specifications are not provided by the manufacturer) must, before reporting patient test results, establish for each test system the performance specification for the following performance characteristics, as applicable: "...provide evidence that the accuracy, precision, analytical sensitivity, and analytical specificity of the procedure is adequate to meet the clients' needs as determined by the laboratory director and clinical consultant." To comply with these regulations any change in the reagent, analytical material, standard, or control of a test method developed in-house requires a re-verification of the performance specifications at considerable expense to Tarrant County.

The NTRL must also participate in proficiency testing annually to demonstrate competency in clinical diagnostic, environmental, and biological threat testing. Various regulatory programs including CLIA, the National Environmental Laboratory Accreditation Program (NELAP), and the LRN mandate that certified and/or accredited laboratories register and participate with the regulatory agency's approved proficiency testing providers. Changes made to the proficiency testing providers that the NTRL uses could result in unexpected proficiency testing failures with the subsequent burden and cost of corrective actions and the possible suspension of impacted laboratory services.

Rune-Par Nilsson, Ph.D., HCLD (ABB)
Laboratory Services Division Manager

TAKINGS IMPACT ASSESSMENT CHECKLIST

Complete this form for any county action that involves the adoption of a regulation, policy, guideline, court resolution, or order.

Project/Regulation Name: Approval of Exemption from Competitive Bidding Requirements - Purchase of Reagents, Controls, Equipment Parts, and Proficiency Testing Materials - Public Health - Various Vendors

County Department: PURCHASING

Contact Person: Melissa Lee, C.P.M., A.P.P.

Phone Number for Contact Person: (817) 884-3245

Type of TIA Performed: (SHORT TIA) or FULL TIA. Circle one after answering the questions in Sections II and III below.

****

I. Stated Purpose

Attach to this checklist an explanation of the purpose of the regulation, policy, guideline, court resolution or order.

****

Note: The remainder of this Takings Impact Assessment Checklist should be completed in consultation with the Criminal District Attorney's Office.

II. Potential Effect on Private Real Property

1. Does the county action require a physical invasion, occupation or dedication of real property?

   Yes _____ No √

2. Does the county action limit or restrict a real property right, even partially or temporarily?

   Yes _____ No √

If you answered yes to either question, go to Section III. If you answered no to both, STOP HERE and circle SHORT TIA at the top of the form.

****

CERTIFICATE OF INTERESTED PARTIES

FORM 1295

Complete Nos. 1 - 4 and 6 if there are interested parties.
Complete Nos. 1, 2, 3, 5, and 6 if there are no interested parties.

OFFICE USE ONLY
CERTIFICATION OF FILING

Certificate Number:
2025-1379136

Date Filed:
10/20/2025

Date Acknowledged:

1 Name of business entity filing form, and the city, state and country of the business entity's place of business.
Bio-Rad Laboratories,Inc
Hercules, CA United States

2 Name of governmental entity or state agency that is a party to the contract for which the form is being filed.
Tarrant County

3 Provide the identification number used by the governmental entity or state agency to track or identify the contract, and provide a description of the services, goods, or other property to be provided under the contract.
EXEMPT
NTRL Laboratory Supplies

4 Name of Interested Party	City, State, Country (place of business)	Nature of interest (check applicable)	
		Controlling	Intermediary

5 Check only if there is NO Interested Party. [X]

6 UNSWORN DECLARATION

My name is Sean Dumlao, and my date of birth is 11/19/1979.

My address is 1000 Alfred Nobel Drive, Hercules (city), CA (state), 94547 (zip code), USA (country).

I declare under penalty of perjury that the foregoing is true and correct.

Executed in Solano County, State of CA, on the 20 day of Oct (month), 20 25 (year).

Sean Dumlao
Digitally signed by Sean Dumlao
Date: 2025.10.20 14:40:34 -07'00'

Signature of authorized agent of contracting business entity
(Declarant)

Docusign Envelope ID: 65D82E5B-B4E1-46AF-87CB-A52891FFBC8E

CERTIFICATE OF INTERESTED PARTIES

FORM 1295

Complete Nos. 1 - 4 and 6 if there are interested parties.
Complete Nos. 1, 2, 3, 5, and 6 if there are no interested parties.

OFFICE USE ONLY
CERTIFICATION OF FILING

Certificate Number:
2025-1353075

Date Filed:
08/21/2025

Date Acknowledged:

1 Name of business entity filing form, and the city, state and country of the business entity's place of business.
The College of American Pathologists
Northfield, IL United States

2 Name of governmental entity or state agency that is a party to the contract for which the form is being filed.
Tarrant County

3 Provide the identification number used by the governmental entity or state agency to track or identify the contract, and provide a description of the services, goods, or other property to be provided under the contract.
Purchase of Drug Standards....
Purchase of Drug Standards and Controls, Instrument Parts, Non-Routine Lab Testing, and Consumables.

4 Name of Interested Party	City, State, Country (place of business)	Nature of interest (check applicable)	
		Controlling	Intermediary
The College of American Pathologists	Northfield, IL United States	X	

5 Check only if there is NO Interested Party. ☐

6 UNSWORN DECLARATION

My name is Calvin Boyd, and my date of birth is 05/12/1988.

My address is 325 Waukegan Road, Northfield, Cook, Illinois, 60093, _____.
(city) (state) (zip code) (country)

I declare under penalty of perjury that the foregoing is true and correct.

Executed in Cook County, State of Illinois, on the 21.00 day of 8.00 (month), 20 25.00 (year).

DocuSigned by:
Calvin Boyd
5D8A93D9FF2642E1...

August 21, 2025 | 10:23 AM CDT

Signature of authorized agent of contracting business entity
(Declarant)

CERTIFICATE OF INTERESTED PARTIES

FORM 1295

Complete Nos. 1 - 4 and 6 if there are interested parties.
Complete Nos. 1, 2, 3, 5, and 6 if there are no interested parties.

OFFICE USE ONLY
CERTIFICATION OF FILING

Certificate Number:
2025-1387794

Date Filed:
11/11/2025

Date Acknowledged:

1 Name of business entity filing form, and the city, state and country of the business entity's place of business.

Hardy Diagnostics
Santa Maria, CA United States

2 Name of governmental entity or state agency that is a party to the contract for which the form is being filed.

Tarrant County

3 Provide the identification number used by the governmental entity or state agency to track or identify the contract, and provide a description of the services, goods, or other property to be provided under the contract.

EXEMPT
NTRL Laboratory Supplies

4 Name of Interested Party	City, State, Country (place of business)	Nature of interest (check applicable)	
		Controlling	Intermediary

5 Check only if there is NO Interested Party. [X]

6 UNSWORN DECLARATION

My name is Jeffrey Schroder, and my date of birth is 09/23/1964.

My address is 429 S. Pioneer Blvd., Springboro (city), OH (state), 45066 (zip code), USA (country).

I declare under penalty of perjury that the foregoing is true and correct.

Executed in Warren County, State of Ohio, on the 11 day of Nov (month), 20 25 (year).

Jeffrey Schroder

Signature of authorized agent of contracting business entity
(Declarant)

CERTIFICATE OF INTERESTED PARTIES

FORM 1295

Complete Nos. 1 - 4 and 6 if there are interested parties.
Complete Nos. 1, 2, 3, 5, and 6 if there are no interested parties.

OFFICE USE ONLY
CERTIFICATION OF FILING

Certificate Number:
2025-1377015

Date Filed:
10/15/2025

Date Acknowledged:

1 Name of business entity filing form, and the city, state and country of the business entity's place of business.
IDEXX Distribution, Inc
Westbrook, ME United States

2 Name of governmental entity or state agency that is a party to the contract for which the form is being filed.
Tarrant County

3 Provide the identification number used by the governmental entity or state agency to track or identify the contract, and provide a description of the services, goods, or other property to be provided under the contract.
Exempt
NTRL Laboratory Supplies

4 Name of Interested Party	City, State, Country (place of business)	Nature of interest (check applicable)	
		Controlling	Intermediary

5 Check only if there is NO Interested Party. [X]

6 UNSWORN DECLARATION

My name is Chun-Ming Chen, and my date of birth is 06/17/1957.

My address is One IDEXX Drive, Westbrook (city), ME (state), 04092 (zip code), USA (country).

I declare under penalty of perjury that the foregoing is true and correct.

Executed in Cumberland County, State of ME, on the 15 day of October (month), 20 25 (year).

Signature of authorized agent of contracting business entity
(Declarant)

CERTIFICATE OF INTERESTED PARTIES

FORM 1295

Complete Nos. 1 - 4 and 6 if there are interested parties.
Complete Nos. 1, 2, 3, 5, and 6 if there are no interested parties.

OFFICE USE ONLY
CERTIFICATION OF FILING

Certificate Number:
2025-1379181

Date Filed:
10/20/2025

Date Acknowledged:

1 Name of business entity filing form, and the city, state and country of the business entity's place of business.

Integrated DNA Technologies, Inc.
Coralville, IA United States

2 Name of governmental entity or state agency that is a party to the contract for which the form is being filed.

Tarrant County

3 Provide the identification number used by the governmental entity or state agency to track or identify the contract, and provide a description of the services, goods, or other property to be provided under the contract.

EXEMPT
NTRL Laboratory Supplies

4 Name of Interested Party	City, State, Country (place of business)	Nature of interest (check applicable)	
		Controlling	Intermediary

5 Check only if there is NO Interested Party. [X]

6 UNSWORN DECLARATION

My name is Charles Chang, and my date of birth is 5/18/1991.

My address is 1710 Commercial Park, Coralville (city), IA (state), 52241 (zip code), Johnson (country).

I declare under penalty of perjury that the foregoing is true and correct.

Executed in Orange County, State of CA, on the 20 day of October (month), 2025 (year).

Charles Chang

Signature of authorized agent of contracting business entity
(Declarant)

CERTIFICATE OF INTERESTED PARTIES

FORM 1295

Complete Nos. 1 - 4 and 6 if there are interested parties.
Complete Nos. 1, 2, 3, 5, and 6 if there are no interested parties.

OFFICE USE ONLY
CERTIFICATION OF FILING

Certificate Number:
2025-1377357

Date Filed:
10/15/2025

Date Acknowledged:

1 Name of business entity filing form, and the city, state and country of the business entity's place of business.

Phenova, Inc.
Golden, CO United States

2 Name of governmental entity or state agency that is a party to the contract for which the form is being filed.

Tarrant County

3 Provide the identification number used by the governmental entity or state agency to track or identify the contract, and provide a description of the services, goods, or other property to be provided under the contract.

Exempt
NTRL Laboratory Supplies

4 Name of Interested Party	City, State, Country (place of business)	Nature of interest (check applicable)	
		Controlling	Intermediary
Phenova, Inc.	Golden, CO United States	X	

5 Check only if there is NO Interested Party. ☐

6 UNSWORN DECLARATION

My name is Vineet Nikrad, and my date of birth is 10/30/1995.

My address is 6390 Joyce Dr. Suite 100, Golden, CO, 80403, USA.
(city) (state) (zip code) (country)

I declare under penalty of perjury that the foregoing is true and correct.

Executed in USA County, State of CO, on the 15 day of Oct. (month), 20 25 (year).

Signature of authorized agent of contracting business entity
(Declarant)

CERTIFICATE OF INTERESTED PARTIES

FORM 1295

Complete Nos. 1 - 4 and 6 if there are interested parties.
Complete Nos. 1, 2, 3, 5, and 6 if there are no interested parties.

OFFICE USE ONLY
CERTIFICATION OF FILING

Certificate Number:
2025-1377513

Date Filed:
10/15/2025

Date Acknowledged:

1 Name of business entity filing form, and the city, state and country of the business entity's place of business.
QIAGEN LLC
Germantown, MD United States

2 Name of governmental entity or state agency that is a party to the contract for which the form is being filed.
Tarrant County

3 Provide the identification number used by the governmental entity or state agency to track or identify the contract, and provide a description of the services, goods, or other property to be provided under the contract.
EXEMPT
NTRL Laboratory Supplies

4 Name of Interested Party	City, State, Country (place of business)	Nature of interest (check applicable)	
		Controlling	Intermediary

5 Check only if there is NO Interested Party. [X]

6 UNSWORN DECLARATION

My name is GARY Nealey, and my date of birth is 1/4/67.

My address is 19300 Germantown Road, Germantown (city) MD (state) 20874 (zip code) USA (country).

I declare under penalty of perjury that the foregoing is true and correct.

Executed in Montgomery County, State of MD, on the 23 day of October (month), 2025 (year).

Signature of authorized agent of contracting business entity
(Declarant)

TARRANT COUNTY
COMMISSIONERS COURT COMMUNICATION

Court Date: December 9, 2025	**Court Order #:**	**Page:** 1 of 6
Department: Purchasing	**Prepared By:** Emily Salter, CPPB	**Approved By:** Christopher Lax, CPSM, CPSD, CPCP

SUBJECT:

RFP No. F2023193 - Annual Contract for Inmate Commissary, Banking, and Deposit/Release Services - Sheriff's Office - Keefe Commissary Network LLC - Exercise Second Option for Renewal - Same Contract Terms

***** CONSENT AGENDA *****

COMMISSIONERS COURT ACTION REQUESTED

It is requested that the Commissioners Court approve renewal of RFP No. F2023193, Annual Contract for Inmate Commissary, Banking, and Deposit/Release Services, for the second optional twelve (12) month period at the same contract terms.

BACKGROUND

On November 7, 2023, the Commissioners Court, through Court Order #142099, awarded RFP No. F2023193, Annual Contract for Inmate Commissary, Banking, and Deposit/Release Services, for the Sheriff 's Office, to Keefe Commissary Network LLC.

The award was based upon evaluation criteria set forth in the RFP specifications and contained options to renew for four (4) additional twelve (12) month periods.

On November 19, 2024, the Commissioners Court, through Court Order #144278, approved the first renewal option.

This contract provides inmates the ability to purchase various items from commissary carts such as beverages, snacks, clothing, personal hygiene, stationery, and other items. Purchases by inmates are facilitated by the banking and deposit/release services that are also provided by this contract.

The vendor notified Purchasing in writing that they will extend the same contract terms through December 31, 2026. The Sheriff's Office notified Purchasing in writing that they are pleased with the vendor and wants to renew.

Therefore, it is the joint recommendation of the Sheriff 's Office and Purchasing that the Commissioners Court approve renewal of RFP No. F2023193, Annual Contract for Inmate Commissary, Banking, and Deposit/Release Services, for another twelve (12) month period.

Subject to continued funding by the Commissioners Court, this agreement shall automatically renew January 1, 2027 and January 1, 2028, hereafter for two (2) twelve (12) month periods ending on December 31, 2028, unless sooner terminated by either party as provided herein.

FISCAL IMPACT

This contract constitutes revenue to Tarrant County. Funds will be deposited into account S8700-2026 Sheriff Inmate Commissary/2120910000 Confinement - Administration/482001 Vending Concessions.

Attachments

F2023193 Renewal 2 of 4 Backup.pdf

TARRANT COUNTY PURCHASING DEPARTMENT
100 E. Weatherford St. #303 • Fort Worth, TX 76196 • (817) 884-1414 • (817) 884-2629 (Fax)

Melissa Lee, C.P.M., A.P.P.
Purchasing Agent

Chris Lax, CPSM, CPSD, CPCP
Assistant Purchasing Agent

November 11, 2025

John Puricelli
Executive Vice President
Keefe Commissary Network LLC
3101 Marquis Dr
Garland, TX 75042

Re: RFP No. F2023193 – Annual Contract for Inmate Commissary, Banking, and Deposit/Release Services

Dear Mr. Puricelli:

Referenced bid was for twelve (12) months with four (4) options to renew for additional twelve (12) months each. The original contract was for the period of January 1, 2024, through December 31, 2024. The effective dates for the second renewal option will run from January 1, 2026, through December 31, 2026.

Tarrant County Purchasing Department hereby extends an invitation to Keefe Commissary Network LLC to accept the first option for an additional one (1) year period as the primary vendor for this bid as awarded on November 7, 2023. Keefe Commissary Network LLC acknowledges formal renewal of the option and any contract is contingent upon review and approval by the Tarrant County Commissioner's Court at a later date. Please mark the appropriate response below and provide your signature above your printed name. All prices must remain firm for the optional renewal period through December 31, 2026.

☒ Yes, Keefe Commissary Network LLC will accept the offer to extend the same contract terms through December 31, 2026. **Please include a current 1295 Form with your response.**

☐ No, Keefe Commissary Network LLC will NOT accept the offer to extend the same contract terms through December 31, 2026.

Please email your signed response.

Sincerely,

Emily Salter
Emily Salter, Sr. Contracts Admin
Tarrant County
817-884-1143

John Puricelli, Executive Vice President
Keefe Commissary Network LLC

11/11/2025
Date

Memorandum

To: Calvin Bond

Dept: Sheriff's Office

From: Emily Salter, Sr. Contracts Admin, Purchasing Department

Date: 11/7/2025

Re: Renewal of RFP F2023193, Annual Contract for Inmate Commissary, Banking, and Deposit/Release Services

---

The above-mentioned contract will expire on December 31, 2025. This contract included four (4) options to renew with the vendor for additional twelve (12) month terms. The first renewal term would commence January 1, 2026, and would expire December 31, 2026.

If you wish to exercise this option to renew and continue this contract with the vendor listed below for twelve more months, please check the appropriate item and email this form back to me at ejsalter@tarrantcountytx.gov.

Keefe Commissary Network LLC

X Yes, I wish to continue the current contract with the above-mentioned vendor for the first renewal term of the contract.

This contract constitutes revenue to the Sheriff's Commissary Fund.

_____No, I do not wish to continue the current contract with the above-mentioned vendor for the following reason(s).

_____

SIGNATURE: Calvin C. Bond DATE: 11/10/2025

RFP F2023193 Annual Contract for Inmate Commissary, Banking, and Deposit/Release Services

Award

		Keefe Commissary Network LLC Garland, TX HUB - No	Correct Commissary, LLC Ruston, LA HUB - No	Union Supply Group, Inc. Dallas, TX HUB - No
Evaluation Criteria	Max Points	Score	Score	Score
Qualifications and Demonstrated Experience	30	**26.43**	18.83	22.07
Demonstrated Expertise of Key Personnel	10	**8.37**	7.17	7.77
Product Pricing, Quality, and Choices	20	**18.00**	15.33	15.33
Pricing - Monthly Minimum Guaranteed Reimbursement	25	**25.00**	21.95	16.20
Pricing - Percentage of Overages and Fees	5	**3.33**	3.17	3.17
Financial Stability	5	**2.50**	3.00	3.00
References	5	**3.24**	2.27	1.50
Total Score	100	**86.87**	71.72	69.04

Notes: No-bids were received from CTU OF DFW and CSI Leasing, Inc.

TAKINGS IMPACT ASSESSMENT CHECKLIST

Complete this form for any county action that involves the adoption of a regulation, policy, guideline, court resolution, or order.

Project/Regulation Name: RFP No. F2023193 - Annual Contract for Inmate Commissary, Banking, and Deposit/Release Services - Sheriff's Office - Keefe Commissary Network LLC - Exercise Second Option for Renewal - Same Contract Terms

County Department: PURCHASING
Contact Person: Melissa Lee, C.P.M., A.P.P.
Phone Number for Contact Person: (817) 884-3245

Type of TIA Performed: (SHORT TIA) or FULL TIA. Circle one after answering the questions in Sections II and III below.

****

I.Stated Purpose

Attach to this checklist an explanation of the purpose of the regulation, policy, guideline, court resolution or order.

****

Note: The remainder of this Takings Impact Assessment Checklist should be completed in consultation with the Criminal District Attorney's Office.

II. Potential Effect on Private Real Property

1. Does the county action require a physical invasion, occupation or dedication of real property?

   Yes_____ No __√__

2. Does the county action limit or restrict a real property right, even partially or temporarily?

   Yes_____ No __√__

If you answered yes to either question, go to Section III. If you answered no to both, STOP HERE and circle SHORT TIA at the top of the form.

****

TARRANT COUNTY
COMMISSIONERS COURT COMMUNICATION

Court Date: December 9, 2025	**Court Order #:**	**Page:** 1 of 9
Department: Purchasing	**Prepared By:** Kehinde Olugbile	**Approved By:** Christopher Lax, CPSM, CPSD, CPCP

SUBJECT:

RFP No. F2024017 - Annual Contract for Defendant-Paid Substance Abuse Outpatient Treatment Services - Community Supervision and Corrections Department - Various Vendors - Exercise Second and Final Renewal Option for Renewal - Same Contract Terms

***** CONSENT AGENDA *****

COMMISSIONERS COURT ACTION REQUESTED

It is requested that the Commissioners Court approve renewal of RFP No. F2024017, Annual Contract for Defendant-Paid Substance Abuse Outpatient Treatment Services, for the second and final optional twelve (12) month period to the following vendors at the same contract terms:

Recovery Resource Council
The Polo Group, LLC

BACKGROUND

On January 9, 2024, the Commissioners Court, through Court Order #142412, awarded RFP No. F2024017, Annual Contract for Defendant-Paid Substance Abuse Outpatient Treatment Services, for Community Supervision and Corrections Department (CSCD), to the following vendors:

Atlas Counseling and Education, LLC
Opportunities Counseling Center, Inc.
Recovery Resource Council
The Polo Group, LLC.

The awards were based upon evaluation criteria set forth in the RFP specifications and contained options to renew for two (2) additional twelve (12) month periods.

On March 5, 2024, the Commissioners Court, through Court Order #142769, canceled the award made to Atlas Counseling and Education, LLC, when it was discovered that Atlas Counseling and Education, LLC does not hold a facility license and therefore, does not meet contract requirements.

On September 9, 2024, the Commissioners Court, through Court Order #143819, approved the first renewal option.

On March 5, 2025, a letter of termination was sent to Opportunities Counseling Center Inc.

This contract is for CSCD to use substance abuse outpatient treatment services as a supervision tool for defendants and as an alternative measure for sentencing and confinement.

The remaining vendors notified Purchasing in writing that they will extend the same contract terms through January 31, 2027. CSCD notified Purchasing in writing that they are pleased with the vendors and want to renew.

Therefore, it is the joint recommendation of CSCD and Purchasing that the Commissioners Court approve renewal of RFP No. F2024017, Annual Contract for Defendant-Paid Substance Abuse Outpatient Treatment Services, for another twelve (12) month period.

FISCAL IMPACT

No Tarrant County funds are required. Services are paid by defendants.

Attachments

F2024017 Back Up.pdf

TARRANT COUNTY PURCHASING DEPARTMENT
100 E. Weatherford St. #303 • Fort Worth, TX 76196 • (817) 884-1414 • (817) 884-2629 (Fax)

Melissa Lee, C.P.M., A.P.P.
Purchasing Agent

Chris Lax, MS.SCM, CPSM, CPSD, CPCP
Assistant Purchasing Agent

November 11, 2025

Eric Niedermayer
Recovery Resource Council
2700 Airport Freeway
Fort Worth, TX 76111

Re: RFP No. F2024017 – Annual Contract for Defendant-Paid Substance Abuse Outpatient Treatment Services

Dear Eric:

Referenced bid was for twelve (12) months with two (2) options to renew for an additional twelve (12) months each. The original contract was for the period of February 1, 2024 through January 31, 2025. The effective dates for the second and final renewal option will run from February 1, 2026 through January 31, 2027.

Tarrant County Purchasing Department hereby extends an invitation to Recovery Resource Council to accept the second and final option for an additional one (1) year period as the vendor for this bid as awarded on January 9, 2024. Recovery Resource Council acknowledges formal renewal of the option and any contract is contingent upon review and approval by the Tarrant County Commissioners Court at a later date. Please mark the appropriate response below and provide your signature above your printed name. All prices must remain firm for the optional renewal period through January 31, 2027.

☒ Yes, Recovery Resource Council will accept the offer to extend the same contract terms through January 31, 2027.
Please include a current 1295 Form with your response.

☐ No, Recovery Resource Council will NOT accept the offer to extend the same contract terms through January 31, 2027.

Are any other governmental entities currently utilizing this contract? ☐ Yes ☒ No

If Yes, please return a listing of the participating entities with this letter.

Please email your signed response.

Sincerely,

Kehinde Olugbile, Senior Buyer
Tarrant County

Lisa Reiling Acting CEO
Eric Niedermayer,
Recovery Resource Council

11-5-25
Date

TARRANT COUNTY PURCHASING DEPARTMENT
100 E. Weatherford St. #303 • Fort Worth, TX 76196 • (817) 884-1414 • (817)

Melissa Lee, C.P.M., A.P.P.
Purchasing Agent

Chris Lax, MS.SCM, CPSM, CPSD, CPCP
Assistant Purchasing Agent

November 11, 2025

Lilliam Polo
The Polo Group LLC
209 E Main St,
Waxahachie, TX 75165

Re: RFP No. F2024017 – Annual Contract for Defendant-Paid Substance Abuse Outpatient Treatment Services

Dear Lilliam:

Referenced bid was for twelve (12) months with two (2) options to renew for an additional twelve (12) months each. The original contract was for the period of February 1, 2024 through January 31, 2025. The effective dates for the second and final renewal option will run from February 1, 2026 through January 31, 2027.

Tarrant County Purchasing Department hereby extends an invitation to The Polo Group LLC to accept the second and final option for an additional one (1) year period as the vendor for this bid as awarded on January 9, 2024. The Polo Group LLC acknowledges formal renewal of the option and any contract is contingent upon review and approval by the Tarrant County Commissioners Court at a later date. Please mark the appropriate response below and provide your signature above your printed name. All prices must remain firm for the optional renewal period through January 31, 2027.

(Yes), The Polo Group LLC will accept the offer to extend the same contract terms through January 31, 2027.
Please include a current 1295 Form with your response.

No, The Polo Group LLC will NOT accept the offer to extend the same contract terms through January 31, 2027.

Are any other governmental entities currently utilizing this contract? Yes (No)

If Yes, please return a listing of the participating entities with this letter.

Please email your signed response.

Sincerely,

Kehinde Olugbile, Senior Buyer
Tarrant County

Lilliam Polo,
The Polo Group LLC

11. 04. 2025
Date

Memorandum

To: Elaine Johnson

Dept: Community Supervision and Corrections Department

From: Kehinde Olugbile, Sr. Buyer, Purchasing Department

Date: 10/30/2025

Re: Renewal of RFP No. F2024017 – Annual Contract for Defendant – Paid Substance Abuse Outpatient Treatment Services

---

The above referenced contract will expire on January 31, 2026. This contract included two (2) options to renew with the vendor for additional twelve (12) month terms. The second and final renewal term would commence February 1, 2026 and would expire January 31, 2027.

If you wish to exercise this option to renew and continue this contract with the vendor listed below for twelve more months, please check the appropriate item and email this form back to me at kolugbile@tarrantcountytx.gov by November 6, 2025

Recovery Resource Council
The Polo Group, LLC

X_____ Yes, I wish to continue the current contract with the above mentioned vendor for the second and final renewal term of the contract.

Funds to support this contract will be provided by the following accounts:

_____Defendant Paid_____

_____No, I do not wish to continue the current contract with the above-mentioned vendor for the following reason(s).

_____

SIGNATURE: Elaine Johnson _____ DATE: 11/03/2025

RFP No. F2024017 Annual Contract for Defendant-Paid Substance Abuse Outpatient Treatment Services

Best and Final Offer Scores

				Award	
		Anomaly Therapy Services, Inc. Lancaster, TX HUB - No	Ascendus Behavioral Health dba Phoenix Associates Counseling Services, Inc. Fort Worth, TX HUB - No	**Atlas Counseling and Education, LLC Fort Worth, TX HUB - No CO-OP - Yes**	Balance Beacon, LLC Euless, TX HUB - Yes
Evaluation Criteria	Max Points	Score	Score	Score	Score
Vendor Qualifications and Experience	200	48.00	25.67	**118.33**	144.33
Responsiveness to the RFP Requirements and Specifications	200	61.33	37.33	**122.67**	93.33
Proposed Approach and Management	200	37.67	25.67	**140.00**	121.33
References	50	13.36	0.00	**16.67**	33.33
Proposed Price	350	38.01	157.95	**350.00**	43.05
Total Score	1000	198.37	246.62	**747.67**	435.38

			Award	Award	Award
		Divine Intervention Recovery, LLC Hurst, TX HUB - No	**Opportunities Counseling Center, Inc. Fort Worth, TX HUB - No CO-OP - Yes**	**Recovery Resource Council Fort Worth, TX HUB - No CO-OP - Yes**	**The Polo Group, LLC Waxahachie, TX HUB - No CO-OP - Yes**
Evaluation Criteria	Max Points	Score	Score	Score	Score
Vendor Qualifications and Experience	200	82.67	**153.00**	**154.33**	**156.00**
Responsiveness to the RFP Requirements and Specifications	200	132.00	**146.67**	**152.00**	**152.00**
Proposed Approach and Management	200	130.67	**131.67**	**142.67**	**146.00**
References	50	43.39	**31.70**	**50.00**	**33.33**
Proposed Price	350	93.56	**206.85**	**139.00**	**270.88**
Total Score	1000	482.28	**669.88**	**638.00**	**758.21**

Notes: No-bids received from Helping Open People's Eyes Inc., Solution Focused Psychological Services, PLLC, and Unipak Corp.
The proposal received from North Texas Addiction Counseling and Education, Inc. is not being considered for award since the Commissioners Court approved contract termination regarding RFP No. 2023-088 with this vendor on December 5, 2023.

RFP No. F2024017 Annual Contract for Defendant-Paid Substance Abuse Outpatient Treatment Services

Initial Scores

		Anomaly Therapy Services, Inc. Lancaster, TX HUB - No	Ascendus Behavioral Health dba Phoenix Associates Counseling Services, Inc. Fort Worth, TX HUB - No	Atlas Counseling and Education, LLC Fort Worth, TX HUB - No	Balance Beacon, LLC Euless, TX HUB - Yes
Evaluation Criteria	Max Points	Score	Score	Score	Score
Vendor Qualifications and Experience	200	48.00	25.67	118.33	144.33
Responsiveness to the RFP Requirements and Specifications	200	61.33	37.33	122.67	93.33
Proposed Approach and Management	200	37.67	25.67	140.00	121.33
References	50	13.36	0.00	16.67	33.33
Proposed Price	350	38.01	157.95	350.00	43.05
Total Score	1000	198.37	246.62	747.67	435.38

		Divine Intervention Recovery, LLC Hurst, TX HUB - No	Opportunities Counseling Center, Inc. Fort Worth, TX HUB - No	Recovery Resource Council Fort Worth, TX HUB - No	The Polo Group, LLC Waxahachie, TX HUB - No
Evaluation Criteria	Max Points	Score	Score	Score	Score
Vendor Qualifications and Experience	200	82.67	153.00	154.33	156.00
Responsiveness to the RFP Requirements and Specifications	200	132.00	146.67	152.00	152.00
Proposed Approach and Management	200	130.67	131.67	142.67	146.00
References	50	43.39	31.70	50.00	33.33
Proposed Price	350	93.56	190.04	110.91	245.71
Total Score	1000	482.28	653.07	609.91	733.04

Notes: No-bids received from Helping Open People's Eyes Inc., Solution Focused Psychological Services, PLLC, and Unipak Corp.
The proposal received from North Texas Addiction Counseling and Education, Inc. is not being considered for award since the Commissioners Court approved contract termination regarding RFP No. 2023-088 with this vendor on December 5, 2023.

RFP No. F2024017 A/C for Defendant-Paid Substance Abuse Outpatient Treatment Services	Atlas Counseling and Education Fort Worth, TX HUB - No CO-OP - Yes		Opportunities Counseling Center, Inc. Fort Worth, TX HUB - No CO-OP - Yes		Recovery Resource Council Fort Worth, TX HUB - No CO-OP - Yes		The Polo Group, LLC Waxahachie, TX HUB - No CO-OP - Yes	
Initial Price	Per hr	Total	Per hr	Total	Per hr	Total	Per hr	Total
Group Counseling 4,600 hrs	$12.50	$57,500.00	$20.00	$92,000.00	$30.10	$138,460.00	$15.00	$69,000.00
Individual Counseling 600 hrs	$20.00	$12,000.00	$60.00	$36,000.00	$134.76	$80,856.00	$50.00	$30,000.00
Total	$69,500.00		$128,000.00		$219,316.00		$99,000.00	
BAFO: Price	Per hr	Total	Per hr	Total	Per hr	Total	Per hr	Total
Group Counseling 4,600 hrs	$12.50	$57,500.00	$18.00	$82,800.00	$25.00	$115,000.00	$13.00	$59,800.00
Individual Counseling 600 hrs	$20.00	$12,000.00	$58.00	$34,800.00	$100.00	$60,000.00	$50.00	$30,000.00
Total	$69,500.00		$117,600.00		$175,000.00		$89,800.00	

Additional Fee Schedule					
Group Session(Supportive Out Patient Program	$ 25.00	N/A	N/A	Intake Fee	$ 50.00
Individual Session(Supportive Out Patient Program	$ 40.00			Orientation	Free
Group Session(Intensive Out Patient Program	$ 25.00			Individual Sessions "No Show Fee"	$ 50.00
Individual Session(Intensive Out Patient Program	$ 40.00			Re-admission Fee	$ 30.00
Substance Abuse Evaluation	$ 60.00				
In-Take Session	$ 25.00				
Urine/Oral Swab Analysis	$ 15.00				
Make-up Session IOP/SOP	$ 35.00				

TAKINGS IMPACT ASSESSMENT CHECKLIST

Complete this form for any county action that involves the adoption of a regulation, policy, guideline, court resolution, or order.

Project/Regulation Name: RFP No. F2024017 - Annual Contract for Defendant-Paid Substance Abuse Outpatient Treatment Services - Community Supervision and Corrections Department - Various Vendors - Exercise Second and Final Renewal Option for Renewal - Same Contract Terms

County Department: PURCHASING

Contact Person: Melissa Lee, C.P.M., A.P.P.

Phone Number for Contact Person: (817) 884-3245

Type of TIA Performed: (SHORT TIA) or FULL TIA. Circle one after answering the questions in Sections II and III below.

****

I. Stated Purpose

Attach to this checklist an explanation of the purpose of the regulation, policy, guideline, court resolution or order.

****

Note: The remainder of this Takings Impact Assessment Checklist should be completed in consultation with the Criminal District Attorney's Office.

II. Potential Effect on Private Real Property

1. Does the county action require a physical invasion, occupation or dedication of real property?

   Yes _____ No ___√___

2. Does the county action limit or restrict a real property right, even partially or temporarily?

   Yes _____ No ___√___

If you answered yes to either question, go to Section III. If you answered no to both, STOP HERE and circle SHORT TIA at the top of the form.

****

TARRANT COUNTY
COMMISSIONERS COURT COMMUNICATION

Court Date: December 9, 2025	**Court Order #:**	**Page:** 1 of 10
Department: Purchasing	**Prepared By:** James Bocks, CPPB	**Approved By:** Christopher Lax, CPSM, CPSD, CPCP

SUBJECT:

RFP No. F2024023 - Annual Contract for Disaster Debris Removal, Reduction, Disposal, and Other Emergency Related Services - Emergency Management - Various Vendors - Exercise Second and Final Option for Renewal - Same Contract Terms

***** CONSENT AGENDA *****

COMMISSIONERS COURT ACTION REQUESTED

It is requested that the Commissioners Court approve renewal of RFP No. F2024023, Annual Contract for Disaster Debris Removal, Reduction, Disposal, and Other Emergency Related Services, for the second and final optional twelve (12) month period at the same contract terms.

BACKGROUND

On March 5, 2024, the Commissioners Court, through Court Order #142766, awarded RFP No. F2024023, Annual Contract for Disaster Debris Removal, Reduction, Disposal, and Other Emergency Related Services, for the Emergency Management, to the following vendors:

Primary	DRC Emergency Services, LLC
Secondary	TFR Enterprises, Inc.
Alternate	Ceres Environmental Services, Inc.

The awards were based upon evaluation criteria set forth in the RFP specifications and contained options to renew for two (2) additional twelve (12) month periods.

On December 17, 2024, the Commissioners Court, through Court Order #144499, approved the first renewal option.

This contract is used for clearance, demolition, removal, reduction, and disposal of debris during and after a disaster event. Services provided include removal of debris, reduction of debris into smaller volumes, and the disposal of debris material.

The vendors notified Purchasing in writing that they will extend the same contract terms through March 12, 2027. The Emergency Managment notified Purchasing in writing that they are pleased with the vendors and want to renew.

Therefore, it is the joint recommendation of the Emergency Management and Purchasing that the Commissioners Court approve renewal of RFP No. F2024023, Annual Contract for Disaster Debris Removal, Reduction, Disposal, and other Emergency Related Services, for another twelve (12) month period.

FISCAL IMPACT

There were no expenses for last year. Funding is available in account 61500-2026 Self Insurance/1912000000 Self Insurance/569011 Professional Services.

Attachments

Backup

TARRANT COUNTY PURCHASING DEPARTMENT
100 E. Weatherford St. #303 • Fort Worth, TX 76196 • (817) 884-1414 • (817) 884-2629 (Fax)

Melissa Lee, C.P.M., A.P.P.
Purchasing Agent

Chris Lax, CPSM, CPSD, CPCP
Assistant Purchasing Agent

November 3, 2025

DRC Emergency Services, LLC
6702 Broadway Street
Galveston, TX 77554

Re: RFP F2024023, Annual Contract for Disaster Debris Removal, Reduction, Disposal, and Other Emergency Related Services

Dear Sir/Madam:

Referenced bid was for twelve (12) months with two (2) options to renew for additional twelve (12) months each. The original contract was for the period of 03/13/2024 through 03/12/2025. The effective dates for the first renewal option ran from 03/13/2025 through 03/12/2026. The effective dates for the second and final renewal option will run from 03/13/2026 through 03/12/2027.

☑ Yes, DRC Emergency Services, LLC will accept the offer to extend the same contract terms through the renewal period. **Please include a current 1295 Form with your response.**

☐ No, DRC Emergency Services, LLC will NOT accept the offer to extend the same contract terms through the renewal period.

Are any other governmental entities currently utilizing this contract? ☐ Yes ☑ No
If yes, please return a listing of the participating entities with this letter.

Please fax or email your signed response.

Sincerely,

James L. Bocks, MBA, CPPB
Senior Contract Administrator
(P) 817.884.1738
(E) jlbocks@tarrantcounty.com

Kristy Fuentes
Name: Vice President, Treasurer, Secretary
DRC Emergency Services, LLC
(P) (888) 721-4372
(E) kfuentes@drcusa.com

TARRANT COUNTY PURCHASING DEPARTMENT
100 E. Weatherford St. #303 • Fort Worth, TX 76196 • (817) 884-1414 • (817) 884-2629 (Fax)

Melissa Lee, C.P.M., A.P.P.
Purchasing Agent

Chris Lax, CPSM, CPSD, CPCP
Assistant Purchasing Agent

November 3, 2025

TFR Enterprises, Inc
601 Leander Drive
Leander, TX 78641

Re: RFP F2024023, Annual Contract for Disaster Debris Removal, Reduction, Disposal, and Other Emergency Related Services

Dear Sir/Madam:

Referenced bid was for twelve (12) months with two (2) options to renew for additional twelve (12) months each. The original contract was for the period of 03/13/2024 through 03/12/2025. The effective dates for the first renewal option ran from 03/13/2025 through 03/12/2026. The effective dates for the second and final renewal option will run from 03/13/2026 through 03/12/2027.

☒ Yes, TFR Enterprises, Inc will accept the offer to extend the same contract terms through the renewal period. **Please include a current 1295 Form with your response.**

☐ No, TFR Enterprises, Inc will NOT accept the offer to extend the same contract terms through the renewal period.

Are any other governmental entities currently utilizing this contract? ☐ Yes ☒ No
If yes, please return a listing of the participating entities with this letter.

Please fax or email your signed response.

Sincerely,

James L. Bocks, MBA, CPPB
Senior Contract Administrator
(P) 817.884.1738
(E) jlbocks@tarrantcounty.com

Tiffany Jean 11/03/2025

Name: Tiffany Jean
TFR Enterprises, Inc
(P) 512-565-0710
(E) tiffany@tfrinc.com

TARRANT COUNTY PURCHASING DEPARTMENT
100 E. Weatherford St. #303 • Fort Worth, TX 76196 • (817) 884-1414 • (817) 884-2629 (Fax)

Melissa Lee, C.P.M., A.P.P.
Purchasing Agent

Chris Lax, CPSM, CPSD, CPCP
Assistant Purchasing Agent

November 3, 2025

Ceres Environmental Services, Inc.
6968 Professional Parkway
Sarasota, FL 34240

Re: RFP F2024023, Annual Contract for Disaster Debris Removal, Reduction, Disposal, and Other Emergency Related Services

Dear Sir/Madam:

Referenced bid was for twelve (12) months with two (2) options to renew for additional twelve (12) months each. The original contract was for the period of 03/13/2024 through 03/12/2025. The effective dates for the first renewal option ran from 03/13/2025 through 03/12/2026. The effective dates for the second and final renewal option will run from 03/13/2026 through 03/12/2027.

☒ Yes, Ceres Environmental Services, Inc. will accept the offer to extend the same contract terms through the renewal period. **Please include a current 1295 Form with your response.**

☐ No, Ceres Environmental Services, Inc. will NOT accept the offer to extend the same contract terms through the renewal period.

Are any other governmental entities currently utilizing this contract? ☐ Yes ☒ No
If yes, please return a listing of the participating entities with this letter.

Please fax or email your signed response.

Sincerely,

James L. Bocks, MBA, CPPB
Senior Contract Administrator
(P) 817.884.1738
(E) jlbocks@tarrantcounty.com

Name: Tia Laurie, Corporate Secretary
Ceres Environmental Services, Inc.
(P) 941-358-1303
(E) TLaurie@ceresenv.com

Signature:

Email: rfp@ceresenv.com

Memorandum

To: Tom Stallings

Dept.: County Administrator's Office

From: James Bocks, MBA, CPPB, Senior Buyer, Purchasing Department

Date: November 3, 2025

Re: RFP F2024023 Annual Contract for Disaster Debris Removal, Reduction, Disposal, and Other Emergency Related Service

---

The above referenced contract will expire on 03/12/2026. This contract included options to renew with the vendor for two (2) additional twelve (12) month terms. The second and final renewal term will commence 03/13/2023 and would expire 03/12/2027.

If you wish to exercise this first option to renew and continue this contract with the vendor(s) listed below for twelve (12) more months, please check the appropriate boxes and email this form **back to me on or before 10/31/2026**

DRC Emergency Services, LLC (Primary)
TFR Enterprises, Inc (Secondary)
Ceres Environmental Services, Inc (Alternate)

● Yes, I wish to continue the current contract with the above mentioned vendor(s) for the referenced term of the contract.

☐ No, I do not wish to continue the current contract with the above mentioned vendor(s) for the following reason(s).

_____

_____

SIGNATURE: _____ DATE: ___October 31, 2025____

RFP No. F2024023 Annual Contract for Disaster Debris Removal, Reduction, Disposal, and Other Emergency Related Services

		Primary Award	Secondary Award	Alternate Award
		DRC Emergency Services, LLC Galveston, TX HUB - No	TFR Enterprises, Inc Leander, TX HUB - No	Ceres Environmental Services, Inc. Sarasota, FL HUB - No
Evaluation Criteria	Max. Points	Score	Score	Score
Company Experience & Preparedness	10	**7.24**	7.16	7.94
Service Summary	15	**8.88**	7.70	10.48
Work Product Samples	5	**2.98**	2.60	3.10
Vendor Staffing Plan	15	**9.24**	7.76	10.80
Safety Questionnaire	15	**10.20**	10.20	10.20
References	5	**4.80**	2.00	4.00
Pricing	35	**33.15**	35.00	17.01
Total Score	100	**76.49**	72.42	63.53

RFP No. F2024023 Annual Contract for Disaster Debris Removal, Reduction, Disposal, and Other Emergency Related Services

		Phillips and Jordan, Inc. Knoxville, TN HUB - Yes	CrowderGulf, LLC Mobile, AL HUB - No	AshBritt, Inc. Deerfield Beach, FL HUB - No
Evaluation Criteria	Max. Points	Score	Score	Score
Company Experience & Preparedness	10	7.10	7.70	7.40
Service Summary	15	9.20	7.42	9.72
Work Product Samples	5	2.88	2.70	3.10
Vendor Staffing Plan	15	9.78	6.70	10.96
Safety Questionnaire	15	10.20	10.50	10.50
References	5	4.00	4.00	4.80
Pricing	35	16.59	20.71	11.08
Total Score	100	59.75	59.73	57.56

RFP No. F2024023 Annual Contract for Disaster Debris Removal, Reduction, Disposal, and Other Emergency Related Services

		CTC Disaster Response, Inc. Topeka, KS HUB - No	Southern Disaster Recovery Greenville, SC HUB - No	Aftermath Disaster Recovery, Inc. Prosper, TX HUB - Yes
Evaluation Criteria	Max. Points	Score	Score	Score
Company Experience & Preparedness	10	5.52	4.80	5.12
Service Summary	15	4.84	5.64	8.02
Work Product Samples	5	0.50	2.90	2.96
Vendor Staffing Plan	15	5.20	4.92	7.82
Safety Questionnaire	15	10.20	9.90	9.60
References	5	4.00	4.00	2.85
Pricing	35	24.95	16.05	9.38
Total Score	100	55.21	48.21	45.75

Notes: No-bid responses were received from Green Planet, Inc., BELFOR USA Group, Inc dba BELFOR Property Restoration, SERVPRO of North Irving, and Unipak Corp.

TAKINGS IMPACT ASSESSMENT CHECKLIST

Complete this form for any county action that involves the adoption of a regulation, policy, guideline, court resolution, or order.

Project/Regulation Name: RFP No. F2024023 – Annual Contract for Disaster Debris Removal, Reduction, Disposal, and Other Emergency Related Services – County Administrator's Office – Various Vendors – Exercise Second and Final Option for Renewal – Same Contract Terms

County Department: PURCHASING

Contact Person: Melissa Lee, C.P.M., A.P.P.

Phone Number for Contact Person: (817) 884-3245

Type of TIA Performed: (SHORT TIA) or FULL TIA. Circle one after answering the questions in Sections II and III below.

****

I. Stated Purpose

Attach to this checklist an explanation of the purpose of the regulation, policy, guideline, court resolution or order.

****

Note: The remainder of this Takings Impact Assessment Checklist should be completed in consultation with the Criminal District Attorney's Office.

II. Potential Effect on Private Real Property

1. Does the county action require a physical invasion, occupation or dedication of real property?

   Yes_____ No __√__

2. Does the county action limit or restrict a real property right, even partially or temporarily?

   Yes_____ No __√__

If you answered yes to either question, go to Section III. If you answered no to both, STOP HERE and circle SHORT TIA at the top of the form.

****

TARRANT COUNTY
COMMISSIONERS COURT COMMUNICATION

Court Date: December 9, 2025	**Court Order #:**	**Page:** 1 of 8
Department: Purchasing	**Prepared By:** Kehinde Olugbile	**Approved By:** Christopher Lax, CPSM, CPSD, CPCP

SUBJECT:

RFP No. F2024026 - Annual Contract for Marketing Services - Countywide - Various Vendors - Exercise Second and Final Option for Renewal - Same Contract Terms

***** CONSENT AGENDA *****

COMMISSIONERS COURT ACTION REQUESTED

It is requested that the Commissioners Court approve renewal of RFP No. F2024026, Annual Contract for Marketing Services, for the second and final optional twelve (12) month period, at the same contract terms.

BACKGROUND

On January 23, 2024, the Commissioners Court, through Court Order #142495, awarded RFP No. F2024026, Annual Contract for Marketing Services, Countywide, to the following vendors:

Belmont Icehouse, LLC
Proscalara, LLC

The awards were based upon evaluation criteria set forth in the RFP specifications and contained options to renew for two (2) additional twelve (12) month periods..

On November 19, 2024, the Commissioners Court, through Court Order #144280, approved the first renewal option.

This service is to assist Tarrant County with marketing needs for large-scale projects where the ultimate aim is public education and outreach. The vendor then proposes a quote detailing a workplan, activities, and deliverables according to the contracted hourly rates according to labor category.

The vendors notified Purchasing in writing that they will extend the same contract terms through January 22, 2027. The County Administration's Office notified Purchasing in writing that they are pleased with the vendors and want to renew.

Therefore, it is the joint recommendation of the County Administrator's Office and Purchasing that the Commissioners Court approve renewal of RFP No. F2024026, Annual Contract for Marketing Services, for another twelve (12) month period.

FISCAL IMPACT

Expenses for last twelve (12) months were $358,974.85. Funding is available in account Various Funds/Various Cost Centers/579031 Advertising/Public Service.

Attachments

F2024026 Backup.pdf

TARRANT COUNTY PURCHASING DEPARTMENT
100 E. Weatherford St. #303 • Fort Worth, TX 76196 • (817) 884-1414 • (817) 884-2629 (Fax)

Melissa Lee, C.P.M., A.P.P.
Purchasing Agent

Chris Lax, CPSM, CPSD, CPCP
Assistant Purchasing Agent

November 12, 2025

Tim Hudson
Belmont Icehouse
3116 Commerce Street Suite D,
Dallas, TX 75226

Re: RFP No. F2024026 **ANNUAL CONTRACT FOR MARKETING SERVICES**

Dear Tim:

The contract referenced above will expire on January 22, 2026. The contract includes two (2) options to renew for an additional twelve (12) months. The effective dates for the second and final renewal option will run from January 23, 2026 through January 22, 2027.

Tarrant County Purchasing Department hereby extends an invitation to Belmont Icehouse to accept the second and final renewal option for an additional one (1) year period as the vendor for this bid as awarded on January 23, 2024. Belmont Icehouse acknowledges formal renewal of the option, and any contract is contingent upon review and approval by the Tarrant County Commissioner's Court at a later date. Please mark the appropriate response below and provide your signature above your printed name. All prices must remain firm for the optional renewal period through January 22, 2027.

1.

☒ Yes, Belmont Icehouse will accept the offer to extend the same contract terms through January 22, 2027. **Please include a current 1295 form with your response.**

☐ No, Belmont Icehouse will NOT accept the offer to extend the same contract terms through January 22, 2027.

Are any other governmental entities currently utilizing this contract? ☐ Yes ☒ No
If yes, please return a listing of the participating entities with this letter.

Please email your signed response.

Sincerely,

Damio
Kehinde Olugbile- Senior Buyer
Tarrant County

Tim Hudson
Belmont Icehouse

11.13.25
Date

TARRANT COUNTY PURCHASING DEPARTMENT
100 E. Weatherford St. #303 • Fort Worth, TX 76196 • (817) 884-1414 • (817) 884-2629 (Fax)

Melissa Lee, C.P.M., A.P.P.
Purchasing Agent

Chris Lax, CPSM, CPSD, CPCP
Assistant Purchasing Agent

November 12, 2025

Stephen Smith
Proscalar LLC
2415 W Grapevine Mills Ct Suite 593,
Grapevine, TX 76051

Re: RFP No. F2024026 **ANNUAL CONTRACT FOR MARKETING SERVICES**

Dear Stephen:

The contract referenced above will expire on January 22, 2026. The contract includes two (2) options to renew for an additional twelve (12) months. The effective dates for the second and final renewal option will run from January 23, 2026 through January 22, 2027.

Tarrant County Purchasing Department hereby extends an invitation to Proscalar LLC to accept the second and final renewal option for an additional one (1) year period as the vendor for this bid as awarded on January 23, 2024. Proscalar LLC acknowledges formal renewal of the option, and any contract is contingent upon review and approval by the Tarrant County Commissioner's Court at a later date. Please mark the appropriate response below and provide your signature above your printed name. All prices must remain firm for the optional renewal period through January 22, 2027.

☑ Yes, Proscalar LLC will accept the offer to extend the same contract terms through January 22, 2027.
Please include a current 1295 Form with your response.

☐ No, Proscalar LLC will NOT accept the offer to extend the same contract terms through January 22, 2027.

Are any other governmental entities currently utilizing this contract? ☐ Yes ☑ No
If yes, please return a listing of the participating entities with this letter.

Please email your signed response.

Sincerely,

Damio
Kehinde Olugbile- Senior Buyer
Tarrant County

Stephen Smith
Proscalar LLC

11/12/2025
Date

Memorandum

To: Tom Stallings

Dept: Administration Department

From: Kehinde Olugbile, Sr. Buyer, Purchasing Department

Date: 11/10/2025

Re: Second and Final Renewal of RFP No. F2024026, Annual Contract for Marketing Services

---

The above referenced contract will expire on January 22, 2026. This contract included two (2) options to renew with the vendor for additional twelve (12) month terms. The second and final renewal term would commence January 23, 2026 and would expire January 22, 2027.

If you wish to exercise this option to renew and continue this contract with the vendor listed below for twelve more months, please check the appropriate item and email this form back to me by November 13, 2025:

Primary: Belmont Icehouse, LLC
Proscalar, LLC

X Yes, I wish to continue the current contract with the above mentioned vendor for the first renewal term of the contract.

Funds to support this contract will be provided by the following accounts:

As needed, per department.

_____ No, I do not wish to continue the current contract with the above-mentioned vendor for the following reason(s).

SIGNATURE: _____ DATE: Nov 17, 2025

RFP NO. F2024026 Annual Contract for Marketing Services
Best and Final Offer Scores

		Primary Award	Primary Award
		Belmont Icehouse Dallas, TX HUB - No CO-OP - Yes	**Proscalar, LLC Grapevine, TX HUB - No CO-OP - Yes**
Evaluation Criteria	Max Points	Score	Score
Qualifications and Experience	300	**253.5**	**240.7**
Sample Work Submission (Portfolio)	300	**270**	**243.8**
References	50	**50**	**50**
Price	350	**207.6**	**196.5**
Total Score	1000	**781.1**	**731**

Notes: Clear Channel was deemed non- responsive for failure to provide all submittal requirements necessary for evaluation, including proposal pricing and agency requirement.

RFP NO. F2024026 Annual Contract for Marketing Services
Initial Scores

		Primary Award Belmont Icehouse Dallas, TX HUB - No CO-OP - Yes	**Primary Award** Proscalar, LLC Grapevine, TX HUB - No CO-OP - Yes	Medium Giant Dallas, TX HUB - No	JBJ Management Dallas, TX HUB - Yes	WeUsThem Inc. Halifax, NS HUB - Yes	Arrowhead Consulting Tulsa, Ok HUB - No	KO Communications LLC Plano, TX HUB - No
Evaluation Criteria	Max Points	Score	Score	Score	Score	Score	Score	Score
Qualifications and Experience	300	**253.5**	**240.7**	182.3	198.6	172.6	131.2	36.9
Sample Work Submission (Portfolio)	300	**270**	**243.8**	210	150	172.5	101.3	15
References	50	**50**	**50**	50	50	16.7	33.4	33.4
Price	350	**207.6**	**194.3**	186.9	191.1	131.3	170.1	350
Total Score	1000	**781.1**	**728.8**	629.2	589.7	493.1	436	435.3

Notes: Clear Channel Outdoor was deemed non-responsive for failure to provide all submittal requirements necessary for evaluation, including proposal pricing and agency requirement.

TAKINGS IMPACT ASSESSMENT CHECKLIST

Complete this form for any county action that involves the adoption of a regulation, policy, guideline, court resolution, or order.

Project/Regulation Name: RFP No. F2024026 - Annual Contract for Marketing Services - Countywide - Various Vendors - Exercise Second and Final Option for Renewal - Same Contract Terms

County Department: PURCHASING

Contact Person: Melissa Lee, C.P.M., A.P.P.

Phone Number for Contact Person: (817) 884-3245

Type of TIA Performed: (SHORT TIA) or FULL TIA. Circle one after answering the questions in Sections II and III below.

****

I. Stated Purpose

Attach to this checklist an explanation of the purpose of the regulation, policy, guideline, court resolution or order.

****

Note: The remainder of this Takings Impact Assessment Checklist should be completed in consultation with the Criminal District Attorney's Office.

II. Potential Effect on Private Real Property

1. Does the county action require a physical invasion, occupation or dedication of real property?

   Yes_____ No __√__

2. Does the county action limit or restrict a real property right, even partially or temporarily?

   Yes_____ No __√__

If you answered yes to either question, go to Section III. If you answered no to both, STOP HERE and circle SHORT TIA at the top of the form.

****

TARRANT COUNTY
COMMISSIONERS COURT COMMUNICATION

Court Date: December 9, 2025	**Court Order #:**	**Page:** 1 of 7
Department: Purchasing	**Prepared By:** Kehinde Olugbile	**Approved By:** Christopher Lax, CPSM, CPSD, CPCP

SUBJECT:

RFQ No. F2024091 - Annual Contract for Tissue Bank Services - Medical Examiner's Office - Various Vendors - Exercise First Option for Renewal - Same Contract Terms

***** CONSENT AGENDA *****

COMMISSIONERS COURT ACTION REQUESTED

It is requested that the Commissioners Court approve renewal of RFQ No. F2024091, Annual Contract for Tissue Bank Services, for the first optional twelve (12) month period at the same contract terms.

BACKGROUND

On October 1, 2024, the Commissioners Court, through Court Order #144012, awarded RFQ No. F2024091, Annual Contract for Tissue Bank Services, for the Medical Examiner's Office, to the following vendors:

LifeGift Organ Donation Center
The University of Texas Southwestern Medical Center d/b/a Transplant Services Center

The awards were based upon each vendor's high ranking in the evaluation procedure as outlined in the RFQ specifications and contained options to renew for two (2) additional twelve (12) month periods.

The purpose of this contract is to utilize a qualified organization to provide tissue bank services to obtain cadaver tissue from donors that are in the custody of the Medical Examiner's Office. The selected organization shall be responsible for contacting the net kin of the deceased and offering the services for tissue donation as defined in the Texas Health and Safety Code Section 693.002.

The vendors notified Purchasing in writing that they will extend the same contract terms through December 2, 2026. The Medical Examiner's Office notified Purchasing in writing that they are pleased with the vendors and want to renew.

Therefore, it is the joint recommendation of the Medical Examiner's Office and Purchasing that the Commissioners Court approve renewal of RFQ No. F2024091, Annual Contract for Tissue Bank Services, for another twelve (12) month period.

Subject to continued funding by the Commissioners Court, this agreement shall automatically renew December 3, 2026, hereafter for one (1) twelve (12) month period ending on December 3, 2027, unless sooner terminated by either party as provided herein.

FISCAL IMPACT

This contract generated revenue of $37,444.00 in FY25 to account 10000-2025 General Fund/2310100000 Medical Examiner/429323 Facility Utilization

.

Attachments

F2024091 Backup.pdf

TARRANT COUNTY PURCHASING DEPARTMENT
100 E. Weatherford St. #303 • Fort Worth, TX 76196 • (817) 884-1414 • (817) 884-2629 (Fax)

Melissa Lee, C.P.M., A.P.P.
Purchasing Agent

Chris Lax, MS.SCM, CPSM, CPSD, CPCP
Assistant Purchasing Agent

November 7, 2025

Kevin Myer
LifeGift
2510 Westridge Street
Houston, TX 77054

Re: RFQ No. F2024091 – Annual Contract for Tissue Bank Services

Dear Kevin:

Referenced bid was for twelve (12) months with two (2) options to renew for an additional twelve (12) months each. The original contract was for the period of December 3, 2024 through December 2, 2025. The effective dates for the first renewal option will run from December 9, 2025 through December 2, 2026.

Tarrant County Purchasing Department hereby extends an invitation to LifeGift to accept the first option for an additional one (1) year period as the vendor for this bid as awarded on December 3, 2024. LifeGift acknowledges formal renewal of the option and any contract is contingent upon review and approval by the Tarrant County Commissioners Court at a later date. Please mark the appropriate response below and provide your signature above your printed name. All prices must remain firm for the optional renewal period through December 2, 2026.

☒ Yes, LifeGift will accept the offer to extend the same contract terms through December 2, 2026.
Please include a current 1295 Form with your response.

☐ No, LifeGift will NOT accept the offer to extend the same contract terms through December 2, 2026.

Are any other governmental entities currently utilizing this contract? ☐ Yes ☒ No

If Yes, please return a listing of the participating entities with this letter.

Please email your signed response.

Sincerely,

Kehinde Olugbile, Senior Buyer
Tarrant County

Kevin Myer (Nov 11, 2025 14:37:56 CST)
Kevin Myer, President and CEO
LifeGift

11/11/2025
Date

Docusign Envelope ID: 7D85CADD-49E6-4F6B-9ADC-2BBA9D898995

TARRANT COUNTY PURCHASING DEPARTMENT
100 E. Weatherford St. #303 • Fort Worth, TX 76196 • (817) 884-1414 • (817) 884-2629 (Fax)

Melissa Lee, C.P.M., A.P.P.
Purchasing Agent

Chris Lax, MS.SCM, CPSM, CPSD, CPCP
Assistant Purchasing Agent

UTSW Contract ID #FY2025-MOU2-06274-NP.1

November 7, 2025

Donna Drury
Transplant Services Center, UT Southwestern Medical Center
5323 Harry Hines Blvd MC 9074
Dallas, TX 75390

Re: RFQ No. F2024091 – Annual Contract for Tissue Bank Services

Dear Donna:

Referenced bid was for twelve (12) months with two (2) options to renew for an additional twelve (12) months each. The original contract was for the period of December 3, 2024 through December 2, 2025. The effective dates for the first renewal option will run from December 9, 2025 through December 2, 2026.

Tarrant County Purchasing Department hereby extends an invitation to Transplant Services Center, UT Southwestern Medical Center to accept the first option for an additional one (1) year period as the vendor for this bid as awarded on December 3, 2024. Transplant Services Center, UT Southwestern Medical Center acknowledges formal renewal of the option and any contract is contingent upon review and approval by the Tarrant County Commissioners Court at a later date. Please mark the appropriate response below and provide your signature above your printed name. All prices must remain firm for the optional renewal period through December 2, 2026.

☒ Yes, Transplant Services Center, UT Southwestern Medical Center will accept the offer to extend the same contract terms through December 2, 2026.
Please include a current 1295 Form with your response.

☐ No, Transplant Services Center, UT Southwestern Medical Center will NOT accept the offer to extend the same contract terms through December 2, 2026.

Are any other governmental entities currently utilizing this contract? ☐ Yes ☒ No

If Yes, please return a listing of the participating entities with this letter.

Please email your signed response.

Sincerely,

Kehinde Olugbile, Senior Buyer
Tarrant County

DocuSigned by:
William Ward
AE18...

William Ward, Senior Manager
Legal Contract Services,
UT Southwestern Medical Center

11/14/2025
Date

Memorandum

To: Dr Crowns

Dept: Medical Examiners Office

From: Kehinde Olugbile, Sr. Buyer, Purchasing Department

Date: 11/5/2025

Re: Renewal of RFQ No. F2024091 – Annual Contract for Tissue Bank Services

---

The above referenced contract will expire on December 3, 2025. This contract included two (2) options to renew with the vendor for additional twelve (12) month terms. The first renewal term would commence December 9, 2025, and would expire December 2, 2026

If you wish to exercise this option to renew and continue this contract with the vendor listed below for twelve more months, please check the appropriate item and email this form back to me at kolugbile@tarrantcountytx.gov by November 11, 2025

LifeGift Organ Donation Center
The University of Texas Southwestern Medical Center d/b/a Transplant Service Center

✓ Yes, I wish to continue the current contract with the above mentioned vendor for the second and final renewal term of the contract.

Funds to support this contract will be provided by the following accounts:

_____No, I do not wish to continue the current contract with the above-mentioned vendor for the following reason(s).

SIGNATURE: _____ DATE: 11/6/25

RFQ No. F2024091 Annual Contract for Tissue Bank Services

Post-Presentation Scores

		LifeGift Organ Donation Center Houston, TX HUB - No	The University of Texas Southwestern Medical Center d/b/a Transplant Services Center Dallas, TX HUB - No
Evaluation Criteria	Max Points	Score	Score
Qualifications & Experience	400	376	362
Scope of Service	450	413	382
References	150	150	150
Total Score	1000	940	894

Notes: No-bids were received from Ameda, Inc., Fisher Healthcare, Green Light Group Tours, Medco Supply Company, Medline Industries, LP, Petroserv Inc., Unipak Corp.
Texas Procurement Inc. is not considered for award because they did not meet requirements regarding minimum experience and certification for American Association of Tissue Banks Accreditation.

RFQ No. F2024091 Annual Contract for Tissue Bank Services

Initial Scores

		Tarrant Eye Resources Inc. d/b/a Fort Worth Eye and Tissue Bank Fort Worth, TX HUB - No	LifeGift Organ Donation Center Houston, TX HUB - No	The University of Texas Southwestern Medical Center d/b/a Transplant Services Center Dallas, TX HUB - No
Evaluation Criteria	Max Points	Score	Score	Score
Qualifications & Experience	400	228	268	253
Scope of Service	450	214	295	277
References	150	150	150	150
Total Score	1000	593	713	680

Notes: No-bids were received from Ameda, Inc., Fisher Healthcare, Green Light Group Tours, Medco Supply Company, Medline Industries, LP, Petroserv Inc., Unipak Corp.
Texas Procurement Inc. is not considered for award because they did not meet requirements regarding minimum experience and certification for American Association of Tissue Banks Accreditation.

TAKINGS IMPACT ASSESSMENT CHECKLIST

Complete this form for any county action that involves the adoption of a regulation, policy, guideline, court resolution, or order.

Project/Regulation Name: RFQ No. F2024091- Annual Contract for Tissue Bank Services – Medical Examiner's Office - Various Vendors - Exercise First Option for Renewal - Same Contract Terms

County Department: PURCHASING

Contact Person: Melissa Lee, C.P.M., A.P.P.

Phone Number for Contact Person: (817) 884-3245

Type of TIA Performed: (SHORT TIA) or FULL TIA. Circle one after answering the questions in Sections II and III below.

****

I. Stated Purpose

Attach to this checklist an explanation of the purpose of the regulation, policy, guideline, court resolution or order.

****

Note: The remainder of this Takings Impact Assessment Checklist should be completed in consultation with the Criminal District Attorney's Office.

II. Potential Effect on Private Real Property

1. Does the county action require a physical invasion, occupation or dedication of real property?

   Yes_____ No __√__

2. Does the county action limit or restrict a real property right, even partially or temporarily?

   Yes_____ No __√__

If you answered yes to either question, go to Section III. If you answered no to both, STOP HERE and circle SHORT TIA at the top of the form.

****

TARRANT COUNTY
COMMISSIONERS COURT COMMUNICATION

Court Date: December 16, 2025	**Court Order #:**	**Page:** 1 of 21
Department: Purchasing	**Prepared By:** Julie Nichols	**Approved By:** Christopher Lax, CPSM, CPSD, CPCP

SUBJECT:

Bid No. F2024111 - Annual Contract for Aftermarket Automotive Parts - Countywide - Various Vendors - Exercise Second and Final Option for Renewal - Same Firm Fixed Prices and Discount from List Price

***** CONSENT AGENDA *****

COMMISSIONERS COURT ACTION REQUESTED

It is requested that the Commissioners Court approve renewal of Bid No. F2024111, Annual Contract for Aftermarket Automotive Parts, for the second and final optional twelve (12) month period at the same firm fixed prices and discount from list price.

BACKGROUND

On July 16, 2024, the Commissioners Court, through Court Order # 143508, awarded Bid No. F2024111, Annual Contract for Aftermarket Automotive Parts, Countywide, to the following vendors:

Bumper to Bumper
NAPA Auto Parts
Parts Authority LLC
XL Parts LLC

The awards were based upon low bid meeting specifications and contained options to renew for two (2) additional twelve (12) month periods.

On May 20, 2025, the Commissioners Court, through Court Order #145277, approved the first renewal option.

The purpose of this bid is to purchase aftermarket vehicle parts to repair vehicles as needed throughout the year. Examples of parts purchased through this contract include automotive batteries, air filters, and brake pads.

The vendors notified Purchasing in writing that their prices will remain firm through September 30, 2027. Fleet Services and the four (4) Maintenance Precincts notified Purchasing in writing that they are pleased with the vendors and want to renew.

Therefore, it is the joint recommendation of Fleet Services, the four (4) Maintenance Precincts, and Purchasing that the Commissioners Court approve renewal of Bid No. F2024111, Annual Contract for Aftermarket Automotive Parts, for another twelve (12) month period.

FISCAL IMPACT

Expenses for the last twelve (12) months were $ 283,293.04. Funding is available in the following accounts:

10000-2026 General Fund/6840200000 Fleet Services/576171 Vehicle Maintenance
26100-2026 Road and Bridge Fund/6110300000 Precinct 1 Maintenance/523011 Parts and Supplies
26100-2026 Road and Bridge Fund/6210300000 Precinct 2 Maintenance/523011 Parts and Supplies
26100-2026 Road and Bridge Fund/6310300000 Precinct 3 Maintenance/523011 Parts and Supplies
26100-2026 Road and Bridge Fund/6410300000 Precinct 4 Maintenance/523011 Parts and Supplies

Attachments

F2024111-Backup.pdf

TARRANT COUNTY PURCHASING DEPARTMENT
100 E. Weatherford St. #303 • Fort Worth, TX 76196 • (817) 884-1414 • (817) 884-2629 (Fax)

Melissa Lee, C.P.M., A.P.P.
Purchasing Agent

Chris Lax, CPSM, CPSD, CPCP
Assistant Purchasing Agent

October 20, 2025

Bumper to Bumper
402 East Chambers
Cleburne, TX 76031
(214) 348-4461
Contact Name: Tyler Carter
tylerc@4mparts.com
Vendor # 7016752

Re: BID NO. F2024111 Annual Contract for Aftermarket Automotive Parts

Dear Tyler Carter:

Referenced bid was for twelve (12) months with two (2) options to renew for additional twelve (12) months each. The original contract was for the period of October 1, 2024 through September 30, 2025. The effective dates of the first renewal option took place October 1, 2025 through September 30, 2026. The second and final renewal option will be effective October 1, 2026 through September 30, 2027.

☑ Yes, Bumper to Bumper will accept the offer to extend the same firm fixed prices and discount from list price through the renewal period. **Please include a current 1295 Form with your response.**

☐ No, Bumper to Bumper will NOT accept the offer to extend the same firm fixed prices and discount from list price through the renewal period.

Are any other governmental entities currently utilizing this contract? ☐ Yes ☑ No
If yes, please return a listing of the participating entities with this letter.

Please fax or email your signed response.

Sincerely,

Julie Nichols

Julie Nichols, Senior Buyer
(P) 817.884.1133
(F) 817.884.1133
(E) jmnichols@tarrantcountytx.gov

Name: Tyler Carter
Tyler Carter
Phone number: 214-348-4461
E-mail: tcarter@nexamotiongroup.com
Date: 10/21/25

TARRANT COUNTY PURCHASING DEPARTMENT
100 E. Weatherford St. #303 • Fort Worth, TX 76196 • (817) 884-1414 • (817) 884-2629 (Fax)

Melissa Lee, C.P.M., A.P.P.
Purchasing Agent

Chris Lax, CPSM, CPSD, CPCP
Assistant Purchasing Agent

October 20, 2025

NAPA Auto Parts
3021 Alta Mere Drive
Fort Worth, TX. 76116
(817) 731-5582
Contact Name: Brandy Fowler
Brandy_fowler@napastore.com
Vendor # 7014727

Re: BID NO. F2024111 Annual Contract for Aftermarket Automotive Parts

Dear Brandy Fowler:

Referenced bid was for twelve (12) months with two (2) options to renew for additional twelve (12) months each. The original contract was for the period of October 1, 2024 through September 30, 2025. The effective dates of the first renewal option took place October 1, 2025 through September 30, 2026. The second and final renewal option will be effective October 1, 2026 through September 30, 2027.

☒ Yes, NAPA Auto Parts will accept the offer to extend the same firm fixed prices and discount from list price through the renewal period. **Please include a current 1295 Form with your response.**

☐ No, NAPA Auto Parts will NOT accept the offer to extend the same firm fixed prices and discount from list price through the renewal period.

Are any other governmental entities currently utilizing this contract? ☐ Yes ☒ No
If yes, please return a listing of the participating entities with this letter.

Please fax or email your signed response.

Sincerely,

Julie Nichols

Julie Nichols, Senior Buyer
(P) 817.884.1133
(F) 817.884.1133
(E) jmnichols@tarrantcountytx.gov

Name: Brandy Fowler
Brandy Fowler
Phone number: 817-731-5594
E-mail: brandy_fowler@napastore.com
Date: 10-22-25

TARRANT COUNTY PURCHASING DEPARTMENT
100 E. Weatherford St. #303 • Fort Worth, TX 76196 • (817) 884-1414 • (817) 884-2629 (Fax)

Melissa Lee, C.P.M., A.P.P.
Purchasing Agent

Chris Lax, CPSM, CPSD, CPCP
Assistant Purchasing Agent

October 20, 2025

Parts Authority
3 Dakota Dr Ste 110
New Hyde Park, NY 11042
(718) 740-4455 x7532
Contact Name: Dave LaBarre
fleetbids@partsauthority.com
Vendor # 7016235

Re: BID NO. F2024111 Annual Contract for Aftermarket Automotive Parts

Dear Dave LaBarre:

Referenced bid was for twelve (12) months with two (2) options to renew for additional twelve (12) months each. The original contract was for the period of October 1, 2024 through September 30, 2025. The effective dates of the first renewal option took place October 1, 2025 through September 30, 2026. The second and final renewal option will be effective October 1, 2026 through September 30, 2027.

☑ Yes, Parts Authority will accept the offer to extend the same firm fixed prices and discount from list price through the renewal period. **Please include a current 1295 Form with your response.**

☐ No, Parts Authority will NOT accept the offer to extend the same firm fixed prices and discount from list price through the renewal period.

Are any other governmental entities currently utilizing this contract? ☐ Yes ☑ No
If yes, please return a listing of the participating entities with this letter.

Please fax or email your signed response.

Sincerely,

Julie Nichols

Julie Nichols, Senior Buyer
(P) 817.884.1133
(F) 817.884.1133
(E) jmnichols@tarrantcountytx.gov

Name: Dave LaBarre
Phone number: 410-789-6571 x7532
E-mail: fleetbids@partsauthority.com
Date: 10/20/2025

TARRANT COUNTY PURCHASING DEPARTMENT
100 E. Weatherford St. #303 • Fort Worth, TX 76196 • (817) 884-1414 • (817) 884-2629 (Fax)

Melissa Lee, C.P.M., A.P.P.
Purchasing Agent

Chris Lax, CPSM, CPSD, CPCP
Assistant Purchasing Agent

October 21, 2025

XL Parts
15701 Northwest Freeway
Houston, TX 77040
(713) 983-1100
Contact Name: Richard Kilpatrick
rkilpatrick@thepartshouse.com
Vendor # 7011614

Re: BID NO. F2024111 Annual Contract for Aftermarket Automotive Parts

Dear Richard Kilpatrick:

Referenced bid was for twelve (12) months with two (2) options to renew for additional twelve (12) months each. The original contract was for the period of October 1, 2024 through September 30, 2025. The effective dates of the first renewal option took place October 1, 2025 through September 30, 2026. The second and final renewal option will be effective October 1, 2026 through September 30, 2027.

☑ Yes, XL Parts will accept the offer to extend the same firm fixed prices and discount from list price through the renewal period. **Please include a current 1295 Form with your response.**

☐ No, XL Parts will NOT accept the offer to extend the same firm fixed prices and discount from list price through the renewal period.

Are any other governmental entities currently utilizing this contract? ☐ Yes ☑ No
If yes, please return a listing of the participating entities with this letter.

Please fax or email your signed response.

Sincerely,

Julie Nichols

Julie Nichols, Senior Buyer
(P) 817.884.1133
(F) 817.884.1133
(E) jmnichols@tarrantcountytx.gov

Name: Richard Kilpatrick
Richard Kilpatrick
Phone number: 727-573-1580 x 3818
E-mail: rkilpatrick@thepartshouse.com
Date: 10/21/25

Memorandum

To: Keith Harris
Dept: Fleet Services
From: Julie Nichols, Sr. Buyer, Purchasing Department
Date: 10/20/2025
Re: Bid No. F2024111, Annual Contract for Aftermarket Automotive Parts

---

The above referenced contract will expire on September 30, 2026. This contract included two (2) options to renew with the vendor for additional twelve (12) month terms. The original contract was for the period of October 1, 2024 through September 30, 2025. The first renewal term commenced October 1, 2025 through September 30, 2026. The second and final renewal term will commence October 1, 2026 and expire September 30, 2027.

If you wish to exercise this option to renew and continue this contract with the vendor listed below for twelve more months, please check the appropriate item and email or fax this form back to me at (817) 884-1133 by October 24, 2025:

Bumper to Bumper
NAPA Auto Parts
Parts Authority LLC
XL Parts LLC

_X_ Yes, I wish to continue the current contract with the above mentioned vendor for the second and final renewal term of the contract. Funds to support this contract will be provided by the following account:

10000-2026 General Fund/6840200000 Central Garage/576171 Vehicle Maintenance

_____No, I do not wish to continue the current contract with the above-mentioned vendor for the following reason(s).

_____

SIGNATURE: Keith W. Harris _____ DATE: 10/20/2025

Memorandum

To: Richard Hatcher or Misael Linan
Dept: Precinct 1 Maintenance
From: Julie Nichols, Sr. Buyer, Purchasing Department
Date: 10/20/2025
Re: Bid No. F2024111, Annual Contract for Aftermarket Automotive Parts

---

The above-mentioned contract will expire on September 30, 2026. This contract included two (2) options to renew with the vendor for additional twelve (12) month terms. The original contract was for the period of October 1, 2024, through September 30, 2025. The first renewal term commenced October 1, 2025, through September 30, 2026. The second and final renewal term will commence October 1, 2026, and expire September 30, 2027.

If you wish to exercise this option to renew and continue this contract with the vendor listed below for twelve more months, please check the appropriate item and email or fax this form back to me at (817) 884-1133 by October 24, 2025:

Bumper to Bumper
NAPA Auto Parts
Parts Authority LLC
XL Parts LLC

/ Yes, I wish to continue the current contract with the above-mentioned vendor for the second and final renewal term of the contract. Funds to support this contract will be provided by the following account:

26100-2026 Road and Bridge Fund/6110300000 Precinct 1 Maintenance/523011 Parts and Supplies

_____ No, I do not wish to continue the current contract with the above-mentioned vendor for the following reason(s).

SIGNATURE: _____ DATE: Oct 20, 2025
Richard T. Hatcher

Memorandum

To: Ronald (Ron) Edwards or Jason Murphy
Dept: Precinct 2 Maintenance
From: Julie Nichols, Sr. Buyer, Purchasing Department
Date: 10/20/2025
Re: Bid No. F2024111, Annual Contract for Aftermarket Automotive Parts

---

The above referenced contract will expire on September 30, 2026. This contract included two (2) options to renew with the vendor for additional twelve (12) month terms. The original contract was for the period of October 1, 2024 through September 30, 2025. The first renewal term commenced October 1, 2025 through September 30, 2026. The second and final renewal term will commence October 1, 2026 and expire September 30, 2027.

If you wish to exercise this option to renew and continue this contract with the vendor listed below for twelve more months, please check the appropriate item and email or fax this form back to me at (817) 884-1133 by October 24, 2025:

Bumper to Bumper
NAPA Auto Parts
Parts Authority LLC
XL Parts LLC

✓ Yes, I wish to continue the current contract with the above mentioned vendor for the second and final renewal term of the contract. Funds to support this contract will be provided by the following account:

26100-2026 Road and Bridge Fund/6210300000 Precinct 2 Maintenance/523011 Parts and Supplies

____ No, I do not wish to continue the current contract with the above-mentioned vendor for the following reason(s).

SIGNATURE: Ron Edwards DATE: 10-20-25

Memorandum

To: Mayo Perez Jr
Dept: Precinct 3 Maintenance
From: Julie Nichols, Sr. Buyer, Purchasing Department
Date: 10/20/2025
Re: Bid No. F2024111, Annual Contract for Aftermarket Automotive Parts

---

The above referenced contract will expire on September 30, 2026. This contract included two (2) options to renew with the vendor for additional twelve (12) month terms. The original contract was for the period of October 1, 2024 through September 30, 2025. The first renewal term commenced October 1, 2025 through September 30, 2026. The second and final renewal term will commence October 1, 2026 and expire September 30, 2027.

If you wish to exercise this option to renew and continue this contract with the vendor listed below for twelve more months, please check the appropriate item and email or fax this form back to me at (817) 884-1133 by October 24, 2025:

Bumper to Bumper
NAPA Auto Parts
Parts Authority LLC
XL Parts LLC

✓ Yes, I wish to continue the current contract with the above mentioned vendor for the second and final renewal term of the contract. Funds to support this contract will be provided by the following account:

26100-2026 Road and Bridge Fund/6310300000 Precinct 3 Maintenance/523011 Parts and Supplies

_____ No, I do not wish to continue the current contract with the above-mentioned vendor for the following reason(s).

SIGNATURE: Mayo Perez Jr DATE: 10/20/25

Memorandum

To: Ned Pyle
Dept: Precinct 4 Maintenance
From: Julie Nichols, Sr. Buyer, Purchasing Department
Date: 10/20/2025
Re: Bid No. F2024111, Annual Contract for Aftermarket Automotive Parts

---

The above referenced contract will expire on September 30, 2026. This contract included two (2) options to renew with the vendor for additional twelve (12) month terms. The original contract was for the period of October 1, 2024 through September 30, 2025. The first renewal term commenced October 1, 2025 through September 30, 2026. The second and final renewal term will commence October 1, 2026 and expire September 30, 2027.

If you wish to exercise this option to renew and continue this contract with the vendor listed below for twelve more months, please check the appropriate item and email or fax this form back to me at (817) 884-1133 by October 24, 2025:

Bumper to Bumper
NAPA Auto Parts
Parts Authority LLC
XL Parts LLC

__✓__ Yes, I wish to continue the current contract with the above mentioned vendor for the second and final renewal term of the contract. Funds to support this contract will be provided by the following account:

26100-2026 Road and Bridge Fund/6410300000 Precinct 4 Maintenance/523011 Parts and Supplies

_____ No, I do not wish to continue the current contract with the above-mentioned vendor for the following reason(s).

SIGNATURE: Ned Pyle DATE: 10-20-25

Bid No. F2024111 Annual Contract for Aftermarket Automotive Parts

				Award		Award		Award	
				NAPA Auto Parts Fort Worth, TX HUB - No CO-OP - Yes		Parts Authority LLC New Hyde Park, NY HUB - No CO-OP - Yes		XL Parts LLC Houston, TX HUB - No CO-OP - Yes	
				Total Price	$19,967.93	Total Price	$30,185.32	Total Price	$24,544.92
Line #	Description	QTY	UOM	Unit	Extended	Unit	Extended	Unit	Extended
1	Battery Group 65, brand: AC Delco	11	EA	No Bid		No Bid		$103.26	$1,135.86
	Alternative Part Price			147.48	$1,622.28	$87.06	$957.66	No Bid	
	Alternate Make/Part Number			East Penn/Battery Group 65		Exide/Battery Group 65		No Bid	
2	Battery Group 31T, brand: AC Delco	12	EA	No Bid		No Bid		$112.52	$1,350.24
	Alternative Part Price			$155.63	$1,867.56	$116.26	$1,395.12	No Bid	
	Alternate Make/Part Number			East Penn/Battery Group 31T		Exide/Battery Group 31T		No Bid	
3	Air Filter, brand: WIX, part # 42488	39	EA	$14.45	$563.55	No Bid		No Bid	
	Alternative Part Price			No Bid		$9.76	$380.64	$10.88	$424.32
	Alternate Make/Part Number			No Bid		Premium Guard/PA5315		Baldwin/PA4113	
4	Air Filter, brand: WIX, part # 46935	19	EA	$10.00	$190.00	No Bid		No Bid	
	Alternative Part Price			No Bid		$5.89	$111.91	$7.93	$150.67
	Alternate Make/Part Number			No Bid		Premium Guard/PA2366		Baldwin/PA4321	
5	Cabin Air Filter, brand: WIX, part # 24579	9	EA	$8.89	$80.01	No Bid		No Bid	
	Alternative Part Price			No Bid		$9.61	$86.49	$7.20	$64.80
	Alternate Make/Part Number			No Bid		Premium Guard/PC4579		Baldwin/PA10136	
6	Cabin Air Filter, brand: WIX, part # 24068	6	EA	$6.66	$39.96	No Bid		No Bid	
	Alternative Part Price			No Bid		$6.97	$41.82	$5.36	$32.16
	Alternate Make/Part Number			No Bid		Premium Guard/PC4068		Baldwin/PA4461	
7	Cabin Air Filter, brand: WIX, part # 49082	25	EA	$13.13	$328.25	No Bid		No Bid	
	Alternative Part Price			No Bid		$6.31	$157.75	$10.65	$266.25
	Alternate Make/Part Number			No Bid		Premium Guard/HC49082		Baldwin/PA5359	
8	Brake Pad, brand: Wagner, part # SX1707	43	EA	No Bid		No Bid		No Bid	
	Alternative Part Price			$32.99	$1,418.57	$55.77	$2,398.11	$55.89	$2,403.27
	Alternate Make/Part Number			NAPA/SG8312X		Centric/307.17070		PowerStop Top Cop/Z37-1707	
9	Brake Pad,brand: Wagner, part # SX1363	79	EA	No Bid		No Bid		No Bid	

Bid No. F2024111 Annual Contract for Aftermarket Automotive Parts

				Award					
				Bumper to Bumper Cleburne, TX HUB - No CO-OP - Yes		Buck's Wheel & Equipment Co. Fort Worth, TX HUB - No		Custom Trucks Unlimited Of NRH Haltom City, TX HUB - No	
				Total Price	$32,825.55	Total Price	*$29,003.92	Total Price	$39,347.79
Line #	Description	QTY	UOM	Unit	Extended	Unit	Extended	Unit	Extended
1	Battery Group 65, brand: AC Delco	11	EA	No Bid		No Bid		$164.96	$1,814.56
	Alternative Part Price			$136.20	$1,498.20	$115.00	$1,265.00	No Bid	
	Alternate Make/Part Number			Continental/Battery Group 65		Continental/Battery Group 65		No Bid	
2	Battery Group 31T, brand: AC Delco	12	EA	No Bid		No Bid		$164.96	$1,979.52
	Alternative Part Price			$143.01	$1,716.12	$85.00	$1,020.00	No Bid	
	Alternate Make/Part Number			Continental/Battery Group 31T		FVP/Battery Group 31T		No Bid	
3	Air Filter, brand: WIX, part # 42488	39	EA	$11.44	$446.16	$26.60	$1,037.40	$34.49	$1,345.11
	Alternative Part Price			No Bid		No Bid		No Bid	
	Alternate Make/Part Number			No Bid		No Bid		No Bid	
4	Air Filter, brand: WIX, part # 46935	19	EA	$7.93	$150.67	$20.99	$398.81	$26.24	$498.56
	Alternative Part Price			No Bid		No Bid		No Bid	
	Alternate Make/Part Number			No Bid		No Bid		No Bid	
5	Cabin Air Filter, brand: WIX, part # 24579	9	EA	$7.04	$63.36	$16.80	$151.20	$23.24	$209.16
	Alternative Part Price			No Bid		No Bid		No Bid	
	Alternate Make/Part Number			No Bid		No Bid		No Bid	
6	Cabin Air Filter, brand: WIX, part # 24068	6	EA	$5.28	$31.68	$13.29	$79.74	$17.24	$103.44
	Alternative Part Price			No Bid		No Bid		No Bid	
	Alternate Make/Part Number			No Bid		No Bid		No Bid	
7	Cabin Air Filter, brand: WIX, part # 49082	25	EA	$11.91	$297.75	$20.21	$505.25	$34.49	$862.25
	Alternative Part Price			No Bid		No Bid		No Bid	
	Alternate Make/Part Number			No Bid		No Bid		No Bid	
8	Brake Pad, brand: Wagner, part # SX1707	43	EA	$59.84	$2,573.12	$57.64	$2,478.52	No Bid	
	Alternative Part Price			No Bid		No Bid		$68.99	$2,966.57
	Alternate Make/Part Number			No Bid		No Bid		Raybestos/SP1707PPH	
9	Brake Pad,brand: Wagner, part # SX1363	79	EA	$61.64	$4,869.56	$51.79	$4,091.41	No Bid	

Bid No. F2024111 Annual Contract for Aftermarket Automotive Parts

				O'Reilly Auto Parts Springfield, MO HUB - No		Straus-Frank Enterprises, LLC Raleigh, NC HUB - No	
				Total Price	$53,582.50	Total Price	*$23,392.97
Line #	Description	QTY	UOM	Unit	Extended	Unit	Extended
1	Battery Group 65, brand: AC Delco	11	EA	No Bid		No Bid	
Alternative Part Price				$85.34	$938.74	$150.34	$1,653.74
Alternate Make/Part Number				East Penn/Battery Group 65		Diehard/Battery Group 65	
2	Battery Group 31T, brand: AC Delco	12	EA	No Bid		No Bid	
Alternative Part Price				$119.15	$1,429.80	$132.84	$1,594.08
Alternate Make/Part Number				East Penn/Battery Group 31T		Diehard/Battery Group 31T	
3	Air Filter, brand: WIX, part # 42488	39	EA	$17.15	$668.85	No Bid	
Alternative Part Price				No Bid		$9.28	$361.92
Alternate Make/Part Number				No Bid		Carquest/87488	
4	Air Filter, brand: WIX, part # 46935	19	EA	$11.89	$225.91	No Bid	
Alternative Part Price				No Bid		$7.04	$133.76
Alternate Make/Part Number				No Bid		Carquest/88935	
5	Cabin Air Filter, brand: WIX, part # 24579	9	EA	$10.57	$95.13	No Bid	
Alternative Part Price				No Bid		$9.28	$83.52
Alternate Make/Part Number				No Bid		Carquest/90206P	
6	Cabin Air Filter, brand: WIX, part # 24068	6	EA	$7.92	$47.52	No Bid	
Alternative Part Price				No Bid		$7.30	$43.80
Alternate Make/Part Number				No Bid		Carquest/90273P	
7	Cabin Air Filter, brand: WIX, part # 49082	25	EA	$15.75	$393.75	No Bid	
Alternative Part Price				No Bid		$12.84	$321.00
Alternate Make/Part Number				No Bid		Carquest/83082	
8	Brake Pad, brand: Wagner, part # SX1707	43	EA	No Bid		No Bid	
Alternative Part Price				$70.66	$3,038.38	$51.18	$2,200.74
Alternate Make/Part Number				Raybestos/SP1707TRH		Carquest/FLD1707	
9	Brake Pad,brand: Wagner, part # SX1363	79	EA	No Bid		No Bid	

Bid No. F2024111 Annual Contract for Aftermarket Automotive Parts

				Award		Award		Award	
				NAPA Auto Parts Fort Worth, TX HUB - No CO-OP - Yes		Parts Authority LLC New Hyde Park, NY HUB - No CO-OP - Yes		XL Parts LLC Houston, TX HUB - No CO-OP - Yes	
				Total Price	$19,967.93	Total Price	$30,185.32	Total Price	$24,544.92
Line #	Description	QTY	UOM	Unit	Extended	Unit	Extended	Unit	Extended
	Alternative Part Price			$32.99	$2,606.21	$67.22	$5,310.38	$61.05	$4,822.95
	Alternate Make/Part Number			NAPA/SG8472X		Centric/307.13630		PowerStop Top Cop/Z37-1367	
10	Brake Rotor,brand: Wagner, part # BD126457E	58	EA	No Bid		No Bid		No Bid	
	Alternative Part Price			$43.00	$2,494.00	$75.06	$4,353.48	$57.00	$3,306.00
	Alternate Make/Part Number			NAPA/48880422		Brembo/09.B534.11		Durago DTS/BR5513301	
11	Brake Rotor,brand: Wagner, part # BD180535E	16	EA	No Bid		No Bid		No Bid	
	Alternative Part Price			$43.00	$688.00	$76.38	$1,222.08	$57.00	$912.00
	Alternate Make/Part Number			NAPA/48880982		MPA/BR75010G		Durago DTS/BR90115801	
12	Brake Rotor,brand: Wagner, part # BD180409E	141	EA	No Bid		No Bid		No Bid	
	Alternative Part Price			$43.00	$6,063.00	$84.32	$11,889.12	$57.00	$8,037.00
	Alternate Make/Part Number			NAPA/48880279		Brembo/09.A406.21		Durago DTS/BR5509701	
13	Fuel Filter, brand: AC Delco, part #TP1015	10	EA	No Bid		$32.99	$329.90	No Bid	
	Alternative Part Price			$28.34	$283.40	No Bid		$22.68	$226.80
	Alternate Make/Part Number			WIX/600451		No Bid		Baldwin/PF46126	
14	Fuel Filter, brand: WIX, part # WF10255NP	9	EA	No Bid		$59.94	$539.46	No Bid	
	Alternative Part Price			$38.98	$350.82	No Bid		$31.00	$279.00
	Alternate Make/Part Number			NAPA/600255NP		No Bid		Baldwin/PF46108	
15	Wiper blade, brand: Trico, part # 14-1HB	10	EA	No Bid		No Bid		$5.60	$56.00
	Alternative Part Price			$11.12	$111.20	$2.96	$29.60	No Bid	
	Alternate Make/Part Number			NAPA/60141		Anco/31-14		No Bid	
16	Wiper Blade, brand: ANCO, part # 31-13	20	EA	No Bid		No Bid		No Bid	
	Alternative Part Price			$11.12	$222.40	$5.13	$102.60	$4.20	$84.00
	Alternate Make/Part Number			NAPA/60131		Trico/13.1		Trico/13-1	
17	Brake Cleaner, brand: Berrymans, part # 1420	180	EA	No Bid		No Bid		No Bid	
	Alternative Part Price			$4.39	$790.20	$2.76	$496.80	$3.40	$612.00
	Alternate Make/Part Number			CRC Chemical/05089		Johnsens/2417		Johnsens/2413	
18	Miniature Lamp, brand: Philips, part # 194CP	40	EA	No Bid		$2.90	$116.00	$3.60	$144.00
	Alternative Part Price			$3.27	$130.80	No Bid		No Bid	

Bid No. F2024111 Annual Contract for Aftermarket Automotive Parts

				Award					
				Bumper to Bumper Cleburne, TX HUB - No CO-OP - Yes		Buck's Wheel & Equipment Co. Fort Worth, TX HUB - No		Custom Trucks Unlimited Of NRH Haltom City, TX HUB - No	
				Total Price	$32,825.55	Total Price	*$29,003.92	Total Price	$39,347.79
Line #	Description	QTY	UOM	Unit	Extended	Unit	Extended	Unit	Extended
Alternative Part Price				No Bid		No Bid		$109.49	$8,649.71
Alternate Make/Part Number				No Bid		No Bid		Raybestos/SP1367APPH	
10	Brake Rotor,brand: Wagner, part # BD126457E	58	EA	$75.59	$4,384.22	$51.51	$2,987.58	No Bid	
Alternative Part Price				No Bid		No Bid		$86.24	$5,001.92
Alternate Make/Part Number				No Bid		No Bid		Power Stop/AR8658EVC	
11	Brake Rotor,brand: Wagner, part # BD180535E	16	EA	$94.49	$1,511.84	$81.16	$1,298.56	No Bid	
Alternative Part Price				No Bid		No Bid		$112.49	$1,799.84
Alternate Make/Part Number				No Bid		No Bid		DFC/604-54266	
12	Brake Rotor,brand: Wagner, part # BD180409E	141	EA	$91.34	$12,878.94	$82.24	$11,595.84	No Bid	
Alternative Part Price				No Bid		No Bid		$89.99	$12,688.59
Alternate Make/Part Number				No Bid		No Bid		Power Stop/AR8654EVC	
13	Fuel Filter, brand: AC Delco, part #TP1015	10	EA	$30.59	$305.90	$36.61	$366.10	$58.49	$584.90
Alternative Part Price				No Bid		No Bid		No Bid	
Alternate Make/Part Number				No Bid		No Bid		No Bid	
14	Fuel Filter, brand: WIX, part # WF10255NP	9	EA	$36.33	$326.97	$63.79	$574.11	$93.74	$843.66
Alternative Part Price				No Bid		No Bid		No Bid	
Alternate Make/Part Number				No Bid		No Bid		No Bid	
15	Wiper blade, brand: Trico, part # 14-1HB	10	EA	$6.97	$69.70	$6.56	$65.60	No Bid	
Alternative Part Price				No Bid		No Bid		No Bid	
Alternate Make/Part Number				No Bid		No Bid		No Bid	
16	Wiper Blade, brand: ANCO, part # 31-13	20	EA	$4.37	$87.40	$4.67	$93.40	No Bid	
Alternative Part Price				No Bid		No Bid		No Bid	
Alternate Make/Part Number				No Bid		No Bid		No Bid	
17	Brake Cleaner, brand: Berrymans, part # 1420	180	EA	$8.54	$1,537.20	$5.53	$995.40	No Bid	
Alternative Part Price				No Bid		No Bid		No Bid	
Alternate Make/Part Number				No Bid		No Bid		No Bid	
18	Miniature Lamp, brand: Philips, part # 194CP	40	EA	$0.74	$29.60	No Bid		No Bid	
Alternative Part Price				No Bid		No Bid		No Bid	

Bid No. F2024111 Annual Contract for Aftermarket Automotive Parts

				O'Reilly Auto Parts Springfield, MO HUB - No		Straus-Frank Enterprises, LLC Raleigh, NC HUB - No	
				Total Price	$53,582.50	Total Price	*$23,392.97
Line #	Description	QTY	UOM	Unit	Extended	Unit	Extended
	Alternative Part Price			$72.83	$5,753.57	$51.86	$4,096.94
	Alternate Make/Part Number			Raybestos/SP1363TRH		Carquest/FLD1363	
10	Brake Rotor,brand: Wagner, part # BD126457E	58	EA	No Bid		No Bid	
	Alternative Part Price			$115.50	$6,699.00	$58.49	$3,392.42
	Alternate Make/Part Number			Raybestos/580422P		Carquest/YH145729P	
11	Brake Rotor,brand: Wagner, part # BD180535E	16	EA	No Bid		No Bid	
	Alternative Part Price			$143.50	$2,296.00	No Bid	
	Alternate Make/Part Number			Raybestos/680982P		No Bid	
12	Brake Rotor,brand: Wagner, part # BD180409E	141	EA	No Bid		No Bid	
	Alternative Part Price			$206.50	$29,116.50	$54.40	$7,670.40
	Alternate Make/Part Number			Raybestos/580875PER		Carquest/YH145582P	
13	Fuel Filter, brand: AC Delco, part #TP1015	10	EA	No Bid		No Bid	
	Alternative Part Price			$35.03	$350.30	$27.48	$274.80
	Alternate Make/Part Number			WIX/WF10451		Carquest/96724	
14	Fuel Filter, brand: WIX, part # WF10255NP	9	EA	No Bid		No Bid	
	Alternative Part Price			$47.93	$431.37	$37.83	$340.47
	Alternate Make/Part Number			WIX/WF10255NP		Carquest/96708	
15	Wiper blade, brand: Trico, part # 14-1HB	10	EA	$27.52	$275.20	$10.03	$100.30
	Alternative Part Price			No Bid		No Bid	
	Alternate Make/Part Number			No Bid		No Bid	
16	Wiper Blade, brand: ANCO, part # 31-13	20	EA	No Bid		No Bid	
	Alternative Part Price			$4.50	$90.00	$10.03	$200.60
	Alternate Make/Part Number			Trico/31-130		Trico/13-1	
17	Brake Cleaner, brand: Berrymans, part # 1420	180	EA	$7.99	$1,438.20	No Bid	
	Alternative Part Price			No Bid		$4.99	$898.20
	Alternate Make/Part Number			No Bid		CRC/1005	
18	Miniature Lamp, brand: Philips, part # 194CP	40	EA	No Bid		No Bid	
	Alternative Part Price			$2.20	$88.00	No Bid	

Bid No. F2024111 Annual Contract for Aftermarket Automotive Parts

				Award		Award		Award	
				NAPA Auto Parts Fort Worth, TX HUB - No CO-OP - Yes		Parts Authority LLC New Hyde Park, NY HUB - No CO-OP - Yes		XL Parts LLC Houston, TX HUB - No CO-OP - Yes	
				Total Price	$19,967.93	Total Price	$30,185.32	Total Price	$24,544.92
Line #	Description	QTY	UOM	Unit	Extended	Unit	Extended	Unit	Extended
Alternate Make/Part Number				NAPA/BP194N		No Bid		No Bid	
19	Miniature lamp, brand: Philips, part # 3157CP	36	EA	No Bid		$7.40	$266.40	$6.60	$237.60
Alternative Part Price				$3.27	$117.72	No Bid		No Bid	
Alternate Make/Part Number				NAPA/BP3157N		No Bid		No Bid	
20	Percentage discount for parts not listed			No Bid		50%		50%	
AC Delco brand parts percentage discount offered				No Bid		62%		42.5%	
Exide brand parts percentage discount offered				No Bid		73%		No Bid	
Continental brand parts percentage discount offered				No Bid		No Bid		No Bid	
NAPA brand parts percentage discount offered				61.63%		No Bid		No Bid	
Baldwin brand parts percentage discount offered				No Bid		No Bid		80%	
East Penn brand parts percentage discount offered				38.8%		No Bid		No Bid	
Premium Guard brand parts percentage discount offered				No Bid		77%		60%	
WIX brand parts percentage discount offered				75%		67%		No Bid	
Centric brand parts percentage discount offered				No Bid		71%		51%	
Brembo brand parts percentage discount offered				No Bid		62%		No Bid	
Wagner brand parts percentage discount offered				No Bid		62%		No Bid	
MPA brand parts percentage discount offered				No Bid		71%		57%	
Trico brand parts percentage discount offered				No Bid		69%		65%	
PowerStop Top Cop brand parts percentage discount offered				No Bid		No Bid		57%	
Durago DTS brand parts percentage discount offered				No Bid		No Bid		50%	
Anco brand parts percentage discount offered				No Bid		82%		No Bid	
Berrymans brand parts percentage discount offered				No Bid		58%		50%	
Raybestos brand parts percentage discount offered				No Bid		No Bid		No Bid	
Johnsen's brand parts percentage discount offered				No Bid		58%		50%	
CRC Chemical brand parts percentage discount offered				74%		No Bid		55%	
Eiko brand parts percentage discount offered				No Bid		No Bid		No Bid	
Philips brand parts percentage discount offered				No Bid		50%		70%	

*Straus-Frank Enterprises, LLC and Buck's Wheel & Equipment Co. were deemed nonresponsive for failing to provide pricing for each item as required per specifications.

No bids were submitted by Industrial Power LLC, Hi-Line Electric Co. Inc, and Main Street Signs & Graphics.

Bid No. F2024111 Annual Contract for Aftermarket Automotive Parts

				Award					
				Bumper to Bumper Cleburne, TX HUB - No CO-OP - Yes		Buck's Wheel & Equipment Co. Fort Worth, TX HUB - No		Custom Trucks Unlimited Of NRH Haltom City, TX HUB - No	
				Total Price	$32,825.55	Total Price	*$29,003.92	Total Price	$39,347.79
Line #	Description	QTY	UOM	Unit	Extended	Unit	Extended	Unit	Extended
Alternate Make/Part Number				No Bid		No Bid		No Bid	
19	Miniature lamp, brand: Philips, part # 3157CP	36	EA	$1.31	$47.16	No Bid		No Bid	
Alternative Part Price				No Bid		No Bid		No Bid	
Alternate Make/Part Number				No Bid		No Bid		No Bid	
20	Percentage discount for parts not listed			40%		30%		10.0%	
AC Delco brand parts percentage discount offered				53%		30%		25%	
Exide brand parts percentage discount offered				No Bid		No Bid		No Bid	
Continental brand parts percentage discount offered				51%		No Bid		No Bid	
NAPA brand parts percentage discount offered				No Bid		No Bid		No Bid	
Baldwin brand parts percentage discount offered				No Bid		No Bid		No Bid	
East Penn brand parts percentage discount offered				No Bid		No Bid		No Bid	
Premium Guard brand parts percentage discount offered				No Bid		No Bid		No Bid	
WIX brand parts percentage discount offered				80%		29%		25%	
Centric brand parts percentage discount offered				No Bid		No Bid		No Bid	
Brembo brand parts percentage discount offered				No Bid		No Bid		No Bid	
Wagner brand parts percentage discount offered				55%		25%		25%	
MPA brand parts percentage discount offered				No Bid		No Bid		No Bid	
Trico brand parts percentage discount offered				54.52%		30%		No Bid	
PowerStop Top Cop brand parts percentage discount offered				No Bid		No Bid		No Bid	
Durago DTS brand parts percentage discount offered				No Bid		No Bid		No Bid	
Anco brand parts percentage discount offered				56.19%		20%		No Bid	
Berrymans brand parts percentage discount offered				55%		No Bid		No Bid	
Raybestos brand parts percentage discount offered				No Bid		No Bid		No Bid	
Johnsen's brand parts percentage discount offered				No Bid		No Bid		No Bid	
CRC Chemical brand parts percentage discount offered				No Bid		No Bid		No Bid	
Eiko brand parts percentage discount offered				No Bid		No Bid		No Bid	
Philips brand parts percentage discount offered				55%		30%		No Bid	

*Straus-Frank Enterprises, LLC and Buck's Wheel & Equipment Co. were deemed nonresponsive for failing to provide pricing for each item as required per specifications.

No bids were submitted by Industrial Power LLC, Hi-Line Electric Co. Inc, and Main Street Signs & Graphics.

Bid No. F2024111 Annual Contract for Aftermarket Automotive Parts

Line #	Description	QTY	UOM	O'Reilly Auto Parts Springfield, MO HUB - No		Straus-Frank Enterprises, LLC Raleigh, NC HUB - No	
				Total Price	$53,582.50	Total Price	*$23,392.97
				Unit	Extended	Unit	Extended
	Alternate Make/Part Number			Eiko/194		No Bid	
19	Miniature lamp, brand: Philips, part # 3157CP	36	EA	No Bid		No Bid	
	Alternative Part Price			$5.73	$206.28	$0.73	$26.28
	Alternate Make/Part Number			Eiko/3157		Carquest/CQ-3157	
20	Percentage discount for parts not listed			41%		50%	
	AC Delco brand parts percentage discount offered			No Bid		50%	
	Exide brand parts percentage discount offered			No Bid		No Bid	
	Continental brand parts percentage discount offered			No Bid		No Bid	
	NAPA brand parts percentage discount offered			No Bid		No Bid	
	Baldwin brand parts percentage discount offered			64%		No Bid	
	East Penn brand parts percentage discount offered			No Bid		No Bid	
	Premium Guard brand parts percentage discount offered			No Bid		No Bid	
	WIX brand parts percentage discount offered			66%		65%	
	Centric brand parts percentage discount offered			No Bid		No Bid	
	Brembo brand parts percentage discount offered			No Bid		No Bid	
	Wagner brand parts percentage discount offered			No Bid		50%	
	MPA brand parts percentage discount offered			No Bid		No Bid	
	Trico brand parts percentage discount offered			44%		50%	
	PowerStop Top Cop brand parts percentage discount offered			No Bid		No Bid	
	Durago DTS brand parts percentage discount offered			No Bid		No Bid	
	Anco brand parts percentage discount offered			No Bid		50%	
	Berrymans brand parts percentage discount offered			41%		50%	
	Raybestos brand parts percentage discount offered			44%		No Bid	
	Johnsen's brand parts percentage discount offered			No Bid		No Bid	
	CRC Chemical brand parts percentage discount offered			No Bid		No Bid	
	Eiko brand parts percentage discount offered			67%		No Bid	
	Philips brand parts percentage discount offered			No Bid		50%	

*Straus-Frank Enterprises, LLC and Buck's Wheel & Equipment Co. were deemed nonresponsive for failing to provide pricing for each item as required per specifications.

No bids were submitted by Industrial Power LLC, Hi-Line Electric Co. Inc, and Main Street Signs & Graphics.

TAKINGS IMPACT ASSESSMENT CHECKLIST

Complete this form for any county action that involves the adoption of a regulation, policy, guideline, court resolution, or order.

Project/Regulation Name: Bid No. F2024111 - Annual Contract for Aftermarket Automotive Parts - Countywide - Various Vendors - Exercise Second and Final Option for Renewal - Same Firm Fixed Prices and Discount from List Price

County Department: PURCHASING

Contact Person: Melissa Lee, C.P.M., A.P.P.

Phone Number for Contact Person: (817) 884-3245

Type of TIA Performed: (SHORT TIA) or FULL TIA. Circle one after answering the questions in Sections II and III below.

****

I. Stated Purpose

Attach to this checklist an explanation of the purpose of the regulation, policy, guideline, court resolution or order.

****

Note: The remainder of this Takings Impact Assessment Checklist should be completed in consultation with the Criminal District Attorney's Office.

II. Potential Effect on Private Real Property

1. Does the county action require a physical invasion, occupation or dedication of real property?

   Yes_____ No __√__

2. Does the county action limit or restrict a real property right, even partially or temporarily?

   Yes_____ No __√__

If you answered yes to either question, go to Section III. If you answered no to both, STOP HERE and circle SHORT TIA at the top of the form.

****

TARRANT COUNTY
COMMISSIONERS COURT COMMUNICATION

Court Date: December 9, 2025	**Court Order #:**	**Page:** 1 of 23
Department: Purchasing	**Prepared By:** Julie Nichols	**Approved By:** Christopher Lax, CPSM, CPSD, CPCP

SUBJECT:

Bid No. F2024116 - Annual Contract for OEM Service and Parts - Countywide - Various Vendors - Exercise Second and Final Option for Renewal - Same Firm Fixed Prices and Hourly Rates

***** CONSENT AGENDA *****

COMMISSIONERS COURT ACTION REQUESTED

It is requested that the Commissioners Court approve renewal of Bid No. F2024116, Annual Contract for OEM Service and Parts, for the second and final optional twelve (12) month period at the same firm fixed prices and hourly rates.

BACKGROUND

On July 16, 2024, the Commissioners Court, through Court Order #143509, awarded Bid No. F2024116, Annual Contract for OEM Service and Parts, Countywide, to the following vendors:

AutoNation Chevrolet Bruce Lowrie Chevrolet	Sections 1 and 2
Grapevine DCJ LLC Meador CDJR	Sections 3 and 4
Five Star Ford Rush Truck Centers of Texas, LP d/b/a Rush Truck Center, Dallas Light & Medium Duty	Sections 5 and 6
Fort Worth Nissan	Sections 13 and 14

The awards were based upon low bid meeting specifications and contained options to renew for two (2) additional twelve (12) month periods.

On May 20, 2025, the Commissioners Court, through Court Order #145278, approved the first renewal option to the following vendors:

AutoNation Chevrolet Bruce Lowrie Chevrolet	Sections 1 and 2
Grapevine DCJ LLC	Sections 3 and 4

Five Star Ford	Sections 5 and 6
Rush Truck Centers of Texas, LP d/b/a Rush Truck Center, Dallas Light & Medium Duty	
Fort Worth Nissan	Sections 13 and 14

The purpose of this agreement is to obtain original equipment manufacturer (OEM) parts and services to repair vehicles as needed throughout the year.

The vendors notified Purchasing in writing that their prices will remain firm through September 30, 2027. Fleet Services and the four (4) Maintenance Precincts notified Purchasing in writing that they are pleased with the vendors and want to renew.

Therefore, it is the joint recommendation of Fleet Services, the four (4) Maintenance Precincts, and Purchasing that the Commissioners Court approve renewal of Bid No. F2024116, Annual Contract for OEM Service and Parts, for another twelve (12) month period.

FISCAL IMPACT

Expenses for last twelve (12) months were $138,471.27. Two (2) government entities currently utilize this bid. Expenses for other entities utilizing this contract for the last twelve (12) months were $183,768.17. Funding is available in the following accounts:

10000-2026 General Fund/6840200000 Fleet Services/576171 Vehicle Maintenance
26100-2026 Road and Bridge Fund/6110300000 Precinct 1 Maintenance/523011 Parts and Supplies
26100-2026 Road and Bridge Fund/6210300000 Precinct 2 Maintenance/523011 Parts and Supplies
26100-2026 Road and Bridge Fund/6310300000 Precinct 3 Maintenance/523011 Parts and Supplies
26100-2026 Road and Bridge Fund/6410300000 Precinct 4 Maintenance/523011 Parts and Supplies

Attachments

F2024116-Backup.pdf

TARRANT COUNTY PURCHASING DEPARTMENT
100 E. Weatherford St. #303 • Fort Worth, TX 76196 • (817) 884-1414 • (817) 884-2629 (Fax)

Melissa Lee, C.P.M., A.P.P.
Purchasing Agent

Chris Lax, CPSM, CPSD, CPCP
Assistant Purchasing Agent

October 24, 2025

AutoNation Chevrolet
7769 boulevard 26
North Richland Hills, TX 76180
(817) 605-2470
Contact Name: Jennifer Solis
solisj@autonation.com
Vendor # 7005508

Re: BID NO. F2024116 Annual Contract for OEM Service and Parts

Dear Jennifer Solis:

Referenced bid was for twelve (12) months with two (2) options to renew for additional twelve (12) months each. The original contract was for the period of October 1, 2024 through September 30, 2025. The effective dates of the first renewal option took place October 1, 2025 through September 30, 2026. The second and final renewal option will be effective October 1, 2026 through September 30, 2027.

☑ Yes, AutoNation Chevrolet will accept the offer to extend the same firm fixed prices and hourly rate through the renewal period. **Please include a current 1295 Form with your response.**

☐ No, AutoNation Chevrolet will NOT accept the offer to extend the same firm fixed prices and hourly rate through the renewal period.

Are any other governmental entities currently utilizing this contract? ☐ Yes ☑ No
If yes, please return a listing of the participating entities with this letter.

Please fax or email your signed response.

Sincerely,

Julie Nichols

Julie Nichols, Senior Buyer
(P) 817.884.1133
(F) 817.884.1133
(E) jmnichols@tarrantcountytx.gov

Name: Jennifer Solis
Jennifer Solis
Phone number: 8176052470
E-mail: solisj@autonation.com
Date: 10-24-25

TARRANT COUNTY PURCHASING DEPARTMENT
100 E. Weatherford St. #303 • Fort Worth, TX 76196 • (817) 884-1414 • (817) 884-2629 (Fax)

Melissa Lee, C.P.M., A.P.P.
Purchasing Agent

Chris Lax, CPSM, CPSD, CPCP
Assistant Purchasing Agent

October 20, 2025

Bruce Lowrie Chevrolet
711 SW Loop 820
Fort Worth, TX 76134
(817) 293-5811
Contact Name: Bryan Inman
binman@brucelowrie.com
Vendor # 7000179

Re: BID NO. F2024116 Annual Contract for OEM Service and Parts

Dear Bryan Inman:

Referenced bid was for twelve (12) months with two (2) options to renew for additional twelve (12) months each. The original contract was for the period of October 1, 2024 through September 30, 2025. The effective dates of the first renewal option took place October 1, 2025 through September 30, 2026. The second and final renewal option will be effective October 1, 2026 through September 30, 2027.

☒ Yes, Bruce Lowrie Chevrolet will accept the offer to extend the same firm fixed prices and hourly rate through the renewal period. **Please include a current 1295 Form with your response.**

☐ No, Bruce Lowrie Chevrolet will NOT accept the offer to extend the same firm fixed prices and hourly rate through the renewal period.

Are any other governmental entities currently utilizing this contract? ☐ Yes ☒ No
If yes, please return a listing of the participating entities with this letter.

Please fax or email your signed response.

Sincerely,

Julie Nichols

Julie Nichols, Senior Buyer
(P) 817.884.1133
(F) 817.884.1133
(E) jmnichols@tarrantcountytx.gov

Name: Bryan Inman
Phone number: 817-568-4810
E-mail: binman@brucelowrie.com
Date: 10-20-2025

TARRANT COUNTY PURCHASING DEPARTMENT
100 E. Weatherford St. #303 • Fort Worth, TX 76196 • (817) 884-1414 • (817) 884-2629 (Fax)

Melissa Lee, C.P.M., A.P.P.
Purchasing Agent

Chris Lax, CPSM, CPSD, CPCP
Assistant Purchasing Agent

October 20, 2025

Grapevine DCJ LLC
2601 William D Tate
Grapevine, TX 76034
(817) 410-7500 EX: 7635
Contact Name: Santiago Ramirez
sramirez@grapevinedcj.com
Vendor # 7010416

Re: BID NO. F2024116 Annual Contract for OEM Service and Parts

Dear Santiago Ramirez:

Referenced bid was for twelve (12) months with two (2) options to renew for additional twelve (12) months each. The original contract was for the period of October 1, 2024 through September 30, 2025. The effective dates of the first renewal option took place October 1, 2025 through September 30, 2026. The second and final renewal option will be effective October 1, 2026 through September 30, 2027.

☒ Yes, Grapevine DCJ LLC will accept the offer to extend the same firm fixed prices and hourly rate through the renewal period. **Please include a current 1295 Form with your response.**

☐ No, Grapevine DCJ LLC will NOT accept the offer to extend the same firm fixed prices and hourly rate through the renewal period.

Are any other governmental entities currently utilizing this contract? ☒ Yes ☐ No
If yes, please return a listing of the participating entities with this letter.

Please fax or email your signed response.

Sincerely,

Julie Nichols

Julie Nichols, Senior Buyer
(P) 817.884.1133
(F) 817.884.1133
(E) jmnichols@tarrantcountytx.gov

Name: _____
Santiago Ramirez
Phone number: 817-410-7635
E-mail: sramirez@grapevinedcj.com
Date: 10.20.2025

TARRANT COUNTY PURCHASING DEPARTMENT
100 E. Weatherford St. #303 • Fort Worth, TX 76196 • (817) 884-1414 • (817) 884-2629 (Fax)

Melissa Lee, C.P.M., A.P.P.
Purchasing Agent

Chris Lax, CPSM, CPSD, CPCP
Assistant Purchasing Agent

October 23, 2025

Five Star Ford
6618 NE Loop 820
North Richland Hills, TX 76180
(817) 498-8838
Contact Name: Johnny Tisdale
JTisdale@5starford.com
Additional Contact: Trace Zelt
Tzelt@5starford.com
Vendor # 7001031

Re: BID NO. F2024116 Annual Contract for OEM Service and Parts

Dear Johnny Tisdale and Trace Zelt:

Referenced bid was for twelve (12) months with two (2) options to renew for additional twelve (12) months each. The original contract was for the period of October 1, 2024 through September 30, 2025. The effective dates of the first renewal option took place October 1, 2025 through September 30, 2026. The second and final renewal option will be effective October 1, 2026 through September 30, 2027..

☑ Yes, Five Star Ford will accept the offer to extend the same firm fixed prices and hourly rate through the renewal period. **Please include a current 1295 Form with your response.**

☐ No, Five Star Ford will NOT accept the offer to extend the same firm fixed prices and hourly rate through the renewal period.

Are any other governmental entities currently utilizing this contract? ☐ Yes ☑ No
If yes, please return a listing of the participating entities with this letter.

Please fax or email your signed response.

Sincerely,

Julie Nichols

Julie Nichols, Senior Buyer
(P) 817.884.1133
(F) 817.884.1133
(E) jmnichols@tarrantcountytx.gov

Name: _____
Trace Zelt
Phone number: 817-519-6821
E-mail: tzelt@5starford.com
Date: 10/23/2025

TARRANT COUNTY PURCHASING DEPARTMENT
100 E. Weatherford St. #303 • Fort Worth, TX 76196 • (817) 884-1414 • (817) 884-2629 (Fax)

Melissa Lee, C.P.M., A.P.P.
Purchasing Agent

Chris Lax, CPSM, CPSD, CPCP
Assistant Purchasing Agent

October 21, 2025

Rush Truck Centers of Texas, LP d/b/a Rush Truck Center, Dallas Light & Medium Duty
4000 Irving Blvd.
Dallas, TX 75247
(214) 678-5900 x5925
Contact Name: Richard Sucre
sucrer@rushenterprises.com
Vendor # 7013947

Re: BID NO. F2024116 Annual Contract for OEM Service and Parts

Dear Richard Sucre:

Referenced bid was for twelve (12) months with two (2) options to renew for additional twelve (12) months each. The original contract was for the period of October 1, 2024 through September 30, 2025. The effective dates of the first renewal option took place October 1, 2025 through September 30, 2026. The second and final renewal option will be effective October 1, 2026 through September 30, 2027.

☑ Yes, Rush Truck Centers of Texas, LP d/b/a Rush Truck Center, Dallas Light & Medium Duty will accept the offer to extend the same firm fixed prices and hourly rate through the renewal period. **Please include a current 1295 Form with your response.**

☐ No, Rush Truck Centers of Texas, LP d/b/a Rush Truck Center, Dallas Light & Medium Duty will NOT accept the offer to extend the same firm fixed prices and hourly rate through the renewal period.

Are any other governmental entities currently utilizing this contract? ☐ Yes ☑ No
If yes, please return a listing of the participating entities with this letter.

Please fax or email your signed response.

Sincerely,

Julie Nichols

Julie Nichols, Senior Buyer
(P) 817.884.1133
(F) 817.884.1133
(E) jmnichols@tarrantcountytx.gov

Name: Richard Sucre
Richard Sucre
Phone number: 214-678-5925
E-mail: sucrer@rushenterprises.com
Date: 10/21/25

TARRANT COUNTY PURCHASING DEPARTMENT
100 E. Weatherford St. #303 • Fort Worth, TX 76196 • (817) 884-1414 • (817) 884-2629 (Fax)

Melissa Lee, C.P.M., A.P.P.
Purchasing Agent

Chris Lax, CPSM, CPSD, CPCP
Assistant Purchasing Agent

October 24, 2025

Fort Worth Nissan
3451 W Loop 820 South
Fort Worth, TX 76116
(817) 560-9000
Contact Name: Michelle Rodriguez
mrodriguez@nfwauto.com
Vendor # 7016859

Re: BID NO. F2024116 Annual Contract for OEM Service and Parts

Dear Michelle Rodriguez:

Referenced bid was for twelve (12) months with two (2) options to renew for additional twelve (12) months each. The original contract was for the period of October 1, 2024 through September 30, 2025. The effective dates of the first renewal option took place October 1, 2025 through September 30, 2026. The second and final renewal option will be effective October 1, 2026 through September 30, 2027.

☑ Yes, Fort Worth Nissan will accept the offer to extend the same firm fixed prices and hourly rate through the renewal period. **Please include a current 1295 Form with your response.**

☐ No, Fort Worth Nissan will NOT accept the offer to extend the same firm fixed prices and hourly rate through the renewal period.

Are any other governmental entities currently utilizing this contract? ☐ Yes ☑ No
If yes, please return a listing of the participating entities with this letter.

Please fax or email your signed response.

Sincerely,

Julie Nichols

Julie Nichols, Senior Buyer
(P) 817.884.1133
(F) 817.884.1133
(E) jmnichols@tarrantcountytx.gov

Name: Michelle Rodriguez
Michelle Rodriguez
Phone number: 817-696-4879
E-mail: MRodriguez@nfwauto.com
Date: 10/24/25

GRAPEVINE

DODGE RAM CHRYSLER Jeep

Governmental Agencies Utilizing Contract F2024116

- City of Fort Worth - $145,925.47
- Trinity River Authority - $37,842.70

Grand Total Spending: $183,768.17

Memorandum

To: Keith Harris
Dept: Fleet Services
From: Julie Nichols, Sr. Buyer, Purchasing Department
Date: 10/20/2025
Re: Bid No. F2024116, Annual Contract for OEM Service and Part

---

The above referenced contract will expire on September 30, 2026. This contract included two (2) options to renew with the vendor for additional twelve (12) month terms. The original contract was for the period of October 1, 2024 through September 30, 2025. The first renewal term commenced October 1, 2025 through September 30, 2026. The second and final renewal term will commence October 1, 2026 and expire September 30, 2027.

If you wish to exercise this option to renew and continue this contract with the vendor listed below for twelve more months, please check the appropriate item and email or fax this form back to me at (817) 884-1133 by October 24, 2025:

AutoNation Chevrolet Bruce Lowrie Chevrolet	Sections 1 and 2
Grapevine DCJ LLC	Sections 3 and 4
Five Star Ford Rush Truck Centers of Texas, LP d/b/a Rush Truck Center, Dallas Light & Medium Duty	Sections 5 and 6
Fort Worth Nissan	Sections 13 and 14

__X__ Yes, I wish to continue the current contract with the above mentioned vendor for the second and final renewal term of the contract. Funds to support this contract will be provided by the following account:

10000-2026 General Fund/6840200000 Central Garage/576171 Vehicle Maintenance

_____No, I do not wish to continue the current contract with the above-mentioned vendor for the following reason(s).

SIGNATURE: Keith W. Harris DATE: 10/20/2025

Memorandum

To: Richard Hatcher or Misael Linan
Dept: Precinct 1 Maintenance
From: Julie Nichols, Sr. Buyer, Purchasing Department
Date: 10/20/2025
Re: Bid No. F2024116, Annual Contract for OEM Service and Parts

---

The above-mentioned contract will expire on September 30, 2026. This contract included two (2) options to renew with the vendor for additional twelve (12) month terms. The original contract was for the period of October 1, 2024, through September 30, 2025. The first renewal term commenced October 1, 2025, through September 30, 2026. The second and final renewal term will commence October 1, 2026, and expire September 30, 2027.

If you wish to exercise this option to renew and continue this contract with the vendor listed below for twelve more months, please check the appropriate item and email or fax this form back to me at (817) 884-1133 by October 24, 2025:

AutoNation Chevrolet Sections 1 and 2
Bruce Lowrie Chevrolet

Grapevine DCJ LLC Sections 3 and 4

Five Star Ford Sections 5 and 6
Rush Truck Centers of Texas, LP
d/b/a Rush Truck Center, Dallas Light & Medium Duty

Fort Worth Nissan Sections 13 and 14

✓ Yes, I wish to continue the current contract with the above-mentioned vendor for the second and final renewal term of the contract. Funds to support this contract will be provided by the following account:

26100-2026 Road and Bridge Fund/6110300000 Precinct 1 Maintenance/523011 Parts and Supplies

_____ No, I do not wish to continue the current contract with the above-mentioned vendor for the following reason(s).

SIGNATURE: _____ DATE: Oct 29, 2025
Richard T. Hatcher

Memorandum

To: Ronald (Ron) Edwards or Jason Murphy
Dept: Precinct 2 Maintenance
From: Julie Nichols, Sr. Buyer, Purchasing Department
Date: 10/20/2025
Re: Bid No. F2024116, Annual Contract for OEM Service and Parts

---

The above referenced contract will expire on September 30, 2026. This contract included two (2) options to renew with the vendor for additional twelve (12) month terms. The original contract was for the period of October 1, 2024 through September 30, 2025. The first renewal term commenced October 1, 2025 through September 30, 2026. The second and final renewal term will commence October 1, 2026 and expire September 30, 2027.

If you wish to exercise this option to renew and continue this contract with the vendor listed below for twelve more months, please check the appropriate item and email or fax this form back to me at (817) 884-1133 by October 24, 2025:

AutoNation Chevrolet Bruce Lowrie Chevrolet	Sections 1 and 2
Grapevine DCJ LLC	Sections 3 and 4
Five Star Ford Rush Truck Centers of Texas, LP d/b/a Rush Truck Center, Dallas Light & Medium Duty	Sections 5 and 6
Fort Worth Nissan	Sections 13 and 14

__✓__ Yes, I wish to continue the current contract with the above mentioned vendor for the second and final renewal term of the contract. Funds to support this contract will be provided by the following account:

<u>26100-2026 Road and Bridge Fund/6210300000 Precinct 2 Maintenance/523011 Parts and Supplies</u>

_____ No, I do not wish to continue the current contract with the above-mentioned vendor for the following reason(s).

SIGNATURE: Ron Edwards DATE: 10-20-25

Memorandum

To: Mayo Perez Jr
Dept: Precinct 3 Maintenance
From: Julie Nichols, Sr. Buyer, Purchasing Department
Date: 10/20/2025
Re: Bid No. F2024116, Annual Contract for OEM Service and Parts

---

The above referenced contract will expire on September 30, 2026. This contract included two (2) options to renew with the vendor for additional twelve (12) month terms. The original contract was for the period of October 1, 2024 through September 30, 2025. The first renewal term commenced October 1, 2025 through September 30, 2026. The second and final renewal term will commence October 1, 2026 and expire September 30, 2027.

If you wish to exercise this option to renew and continue this contract with the vendor listed below for twelve more months, please check the appropriate item and email or fax this form back to me at (817) 884-1133 by October 24, 2025:

AutoNation Chevrolet Bruce Lowrie Chevrolet	Sections 1 and 2
Grapevine DCJ LLC	Sections 3 and 4
Five Star Ford Rush Truck Centers of Texas, LP d/b/a Rush Truck Center, Dallas Light & Medium Duty	Sections 5 and 6
Fort Worth Nissan	Sections 13 and 14

✓ Yes, I wish to continue the current contract with the above mentioned vendor for the second and final renewal term of the contract. Funds to support this contract will be provided by the following account:

26100-2026 Road and Bridge Fund/6310300000 Precinct 3 Maintenance/523011 Parts and Supplies

_____ No, I do not wish to continue the current contract with the above-mentioned vendor for the following reason(s).

SIGNATURE: Mayo Perez Jr DATE: 10/20/25

Memorandum

To: Ned Pyle
Dept: Precinct 4 Maintenance
From: Julie Nichols, Sr. Buyer, Purchasing Department
Date: 10/20/2025
Re: Bid No. F2024116, Annual Contract for OEM Service and Parts

---

The above referenced contract will expire on September 30, 2026. This contract included two (2) options to renew with the vendor for additional twelve (12) month terms. The original contract was for the period of October 1, 2024 through September 30, 2025. The first renewal term commenced October 1, 2025 through September 30, 2026. The second and final renewal term will commence October 1, 2026 and expire September 30, 2027.

If you wish to exercise this option to renew and continue this contract with the vendor listed below for twelve more months, please check the appropriate item and email or fax this form back to me at (817) 884-1133 by October 24, 2025:

AutoNation Chevrolet Bruce Lowrie Chevrolet	Sections 1 and 2
Grapevine DCJ LLC	Sections 3 and 4
Five Star Ford Rush Truck Centers of Texas, LP d/b/a Rush Truck Center, Dallas Light & Medium Duty	Sections 5 and 6
Fort Worth Nissan	Sections 13 and 14

✓ Yes, I wish to continue the current contract with the above mentioned vendor for the second and final renewal term of the contract. Funds to support this contract will be provided by the following account:

26100-2026 Road and Bridge Fund/6410300000 Precinct 4 Maintenance/523011 Parts and Supplies

_____ No, I do not wish to continue the current contract with the above-mentioned vendor for the following reason(s).

SIGNATURE: Ned Pyle DATE: 10-20-25

Bid No. F2024116 Annual Contract for OEM Service and Parts

Line #	Description	QTY	UOM	AutoNation Chevrolet North Richland Hills, TX HUB - No CO-OP - Yes		Bruce Lowrie Chevrolet Fort Worth, TX HUB - No CO-OP - Yes		Five Star Ford North Richland Hills, TX HUB - No CO-OP - Yes		Grapevine DCJ LLC Grapevine, TX HUB - No CO-OP - Yes	
				Unit	**Extended**	**Unit**	**Extended**	**Unit**	**Extended**	**Unit**	**Extended**
1	Section 1: Chevrolet and General Motors Service using OEM Parts			**Award**		**Award**		No Bid		No Bid	
1.1	Hourly Labor Rate, 8:00 AM to 5:00 PM, Monday through Friday	21	Hourly Rate	**$185.00**		**$185.00**		No Bid		No Bid	
Total					**$3,885.00**		**$3,885.00**	No Bid		No Bid	
2	Section 2: Chevrolet and General Motors OEM Parts purchased outside of a Repair			**Award**		**Award**		No Bid		No Bid	
2.1	Head Bolt, part # 11547740	20	Unit Price	**$5.26**	**$105.20**	**$5.20**	**$104.00**	No Bid		No Bid	
2.2	Cam Lifter, part # 12698945	16	Unit Price	**$36.39**	**$582.24**	**$34.89**	**$558.24**	No Bid		No Bid	
2.3	Fuel Pump, part # 12728002	6	Unit Price	**$370.98**	**$2,225.88**	**$344.47**	**$2,066.82**	No Bid		No Bid	
Total					**$2,913.32**		**$2,729.06**	No Bid		No Bid	
3	Section 3: Chrysler and DodgeService using OEM Parts			No Bid		No Bid		No Bid		**Award**	
3.1	Hourly Labor Rate, 8:00 AM to 5:00 PM, Monday through Friday	4	Hourly Rate	No Bid		No Bid		No Bid		**$145.00**	
Total				No Bid		No Bid		No Bid			**$580.00**
4	Section 4: Chrysler and DodgeOEM Parts purchased outside of a Repair			No Bid		No Bid		No Bid		**Award**	
4.1	Idler Pulley, part # 5281677AA	1	Unit Price	No Bid		No Bid		No Bid		**$24.50**	**$24.50**
4.2	Converter, part # 68296341AE	2	Unit Price	No Bid		No Bid		No Bid		**$1,612.50**	**$3,225.00**
4.3	Bearing Wheel, part # 5086772AA	2	Unit Price	No Bid		No Bid		No Bid		**$58.38**	**$116.76**
Total				No Bid		No Bid		No Bid			**$3,366.26**
5	Section 5: FordService using OEM Parts			No Bid		No Bid		**Award**		No Bid	
5.1	Hourly Labor Rate, 8:00 AM to 5:00 PM, Monday through Friday	28	Hourly Rate	No Bid		No Bid		**$149.00**		No Bid	
Total				No Bid		No Bid			**$4,172.00**	No Bid	

Bid No. F2024116 Annual Contract for OEM Service and Parts

Line #	Description	QTY	UOM	AutoNation Chevrolet North Richland Hills, TX HUB - No CO-OP - Yes		Bruce Lowrie Chevrolet Fort Worth, TX HUB - No CO-OP - Yes		Five Star Ford North Richland Hills, TX HUB - No CO-OP - Yes		Grapevine DCJ LLC Grapevine, TX HUB - No CO-OP - Yes	
				Unit	Extended	Unit	Extended	Unit	Extended	Unit	Extended
6	Section 6: FordOEM Parts purchased outside of a Repair			No Bid		No Bid		**Award**		No Bid	
6.1	Rear Brake Pads, part # EU2Z2V200B	3	Unit Price	No Bid		No Bid		**$71.99**	**215.97**	No Bid	
6.2	Ignition Coil, part # 7T4Z12029F	1	Unit Price	No Bid		No Bid		**$47.52**	**47.52**	No Bid	
6.3	Fender liner, part # LB5Z16103C	1	Unit Price	No Bid		No Bid		**$86.87**	**86.87**	No Bid	
	Total			No Bid		No Bid			**$350.36**	No Bid	
7	Section 7: HondaService using OEM Parts			No Bid		No Bid		No Bid		No Bid	
7.1	Hourly Labor Rate, 8:00 AM to 5:00 PM, Monday through Friday	1	Hourly Rate	No Bid		No Bid		No Bid		No Bid	
	Total			No Bid		No Bid		No Bid		No Bid	
8	Section 8: HondaOEM Parts purchased outside of a Repair			No Bid		No Bid		No Bid		No Bid	
8.1	Sensor T, part # 37840-RJH-006	1	Unit Price	No Bid		No Bid		No Bid		No Bid	
8.2	Mirror Assembly R Door, part # 76200-S5D-A11	1	Unit Price	No Bid		No Bid		No Bid		No Bid	
8.3	Actuator L, part # 76215-S5D-A11	1	Unit Price	No Bid		No Bid		No Bid		No Bid	
	Total			No Bid		No Bid		No Bid		No Bid	
9	Section 9: HyundaiService using OEM Parts			No Bid		No Bid		No Bid		No Bid	
9.1	Hourly Labor Rate, 8:00 AM to 5:00 PM, Monday through Friday	1	Hourly Rate	No Bid		No Bid		No Bid		No Bid	
	Total			No Bid		No Bid		No Bid		No Bid	
10	Section 10: HyundaiOEM Parts purchased outside of a Repair			No Bid		No Bid		No Bid		No Bid	
10.1	Right Rear Panel, part # 83481-D3001	1	Unit Price	No Bid		No Bid		No Bid		No Bid	
10.2	High Pressure Fuel Pump, part # 35320-2GGAO	1	Unit Price	No Bid		No Bid		No Bid		No Bid	

Bid No. F2024116 Annual Contract for OEM Service and Parts

Line #	Description	QTY	UOM	AutoNation Chevrolet North Richland Hills, TX HUB - No CO-OP - Yes		Bruce Lowrie Chevrolet Fort Worth, TX HUB - No CO-OP - Yes		Five Star Ford North Richland Hills, TX HUB - No CO-OP - Yes		Grapevine DCJ LLC Grapevine, TX HUB - No CO-OP - Yes	
				Unit	Extended	Unit	Extended	Unit	Extended	Unit	Extended
10.3	Latch Assembly, part # 81310-D3010	1	Unit Price	No Bid		No Bid		No Bid		No Bid	
Total				No Bid		No Bid		No Bid		No Bid	
11	Section 11: KiaService using OEM Parts			No Bid		No Bid		No Bid		No Bid	
11.1	Hourly Labor Rate, 8:00 AM to 5:00 PM, Monday through Friday	1	Hourly Rate	No Bid		No Bid		No Bid		No Bid	
Total				No Bid		No Bid		No Bid		No Bid	
12	Section 12: Kia OEM Parts purchased outside of a Repair			No Bid		No Bid		No Bid		No Bid	
12.1	Pole Roof Antenna, part # 96201-B2100	1	Unit Price	No Bid		No Bid		No Bid		No Bid	
12.2	Relay Assembly, part # 95230-2P050	1	Unit Price	No Bid		No Bid		No Bid		No Bid	
12.3	Intake Maniforld Assembly, part # 28310-2GGA0	1	Unit Price	No Bid		No Bid		No Bid		No Bid	
Total				No Bid		No Bid		No Bid		No Bid	
13	Section 13: NissanService using OEM Parts			No Bid		No Bid		No Bid		No Bid	
13.1	Hourly Labor Rate, 8:00 AM to 5:00 PM, Monday through Friday	1	Hourly Rate	No Bid		No Bid		No Bid		No Bid	
Total				No Bid		No Bid		No Bid		No Bid	
14	Section 14: NissanOEM Parts purchased outside of a Repair			No Bid		No Bid		No Bid		No Bid	
14.1	Cover-M, part # 96373-6CA9A	1	Unit Price	No Bid		No Bid		No Bid		No Bid	
14.2	Door Seal R/R, part # 82830-9HS0B	1	Unit Price	No Bid		No Bid		No Bid		No Bid	
14.3	Engine Cooling Fan, part # 21481-3TB0B	1	Unit Price	No Bid		No Bid		No Bid		No Bid	
Total				No Bid		No Bid		No Bid		No Bid	
15	Section 15: ToyotaService using OEM Parts			No Bid		No Bid		No Bid		No Bid	
15.1	Hourly Labor Rate, 8:00 AM to 5:00 PM, Monday through Friday	1	Hourly Rate	No Bid		No Bid		No Bid		No Bid	

Bid No. F2024116 Annual Contract for OEM Service and Parts

Line #	Description	QTY	UOM	AutoNation Chevrolet North Richland Hills, TX HUB - No CO-OP - Yes		Bruce Lowrie Chevrolet Fort Worth, TX HUB - No CO-OP - Yes		Five Star Ford North Richland Hills, TX HUB - No CO-OP - Yes		Grapevine DCJ LLC Grapevine, TX HUB - No CO-OP - Yes	
				Unit	Extended	Unit	Extended	Unit	Extended	Unit	Extended
Total				No Bid		No Bid		No Bid		No Bid	
16	Section 16: ToyotaOEM Parts purchased outside of a Repair			No Bid		No Bid		No Bid		No Bid	
16.1	Visor Assembly, part # 74320-33E80-B0	1	Unit Price	No Bid		No Bid		No Bid		No Bid	
16.2	Tail Light Assembly, part # 81560-06350	1	Unit Price	No Bid		No Bid		No Bid		No Bid	
16.3	Throttle Body, part # 22030-0T070	1	Unit Price	No Bid		No Bid		No Bid		No Bid	
Total				No Bid		No Bid		No Bid		No Bid	
17	Section 17: VolkswagenService using OEM Parts			No Bid		No Bid		No Bid		No Bid	
17.1	Hourly Labor Rate, 8:00 AM to 5:00 PM, Monday through Friday	1	Hourly Rate	No Bid		No Bid		No Bid		No Bid	
Total				No Bid		No Bid		No Bid		No Bid	
18	Section 18: VolkswagenOEM Parts purchased outside of a Repair			No Bid		No Bid		No Bid		No Bid	
18.1	Differential, part # 1EA-901-131-R	1	Unit Price	No Bid		No Bid		No Bid		No Bid	
18.2	Steering Wheel Air Bag, part #10A-880-201-G-XEA	1	Unit Price	No Bid		No Bid		No Bid		No Bid	
18.3	Drive Motor, part #1EA-901-131 N	1	Unit Price	No Bid		No Bid		No Bid		No Bid	
Total				No Bid		No Bid		No Bid		No Bid	

No bids were received from Bobcat of North Texas, Industrial Power LLC, Custom Trucks Unlimited of NRH, and Main Street Signs & Graphics.

Grapevine DCJ LLC withdrew their responses for Sections 1, 2, and 5-18.

Bid No. F2024116 Annual Contract for OEM Service and Parts

				Meador CDJR Fort Worth, TX HUB - No CO-OP - Yes		Rush Truck Centers of Texas, LP dba Rush Truck Center, Dallas Light & Medium Duty Dallas, TX HUB - No CO-OP - Yes		Fort Worth Nissan Fort Worth, TX HUB - No CO-OP - Yes	
Line #	**Description**	**QTY**	**UOM**	**Unit**	**Extended**	**Unit**	**Extended**	**Unit**	**Extended**
1	Section 1: Chevrolet and General Motors Service using OEM Parts			No Bid		No Bid		No Bid	
1.1	Hourly Labor Rate, 8:00 AM to 5:00 PM, Monday through Friday	21	Hourly Rate	No Bid		No Bid		No Bid	
Total				No Bid		No Bid		No Bid	
2	Section 2: Chevrolet and General Motors OEM Parts purchased outside of a Repair			No Bid		No Bid		No Bid	
2.1	Head Bolt, part # 11547740	20	Unit Price	No Bid		No Bid		No Bid	
2.2	Cam Lifter, part # 12698945	16	Unit Price	No Bid		No Bid		No Bid	
2.3	Fuel Pump, part # 12728002	6	Unit Price	No Bid		No Bid		No Bid	
Total				No Bid		No Bid		No Bid	
3	Section 3: Chrysler and DodgeService using OEM Parts			**Award**		No Bid		No Bid	
3.1	Hourly Labor Rate, 8:00 AM to 5:00 PM, Monday through Friday	4	Hourly Rate	**$95.00**		No Bid		No Bid	
Total					**$380.00**	No Bid		No Bid	
4	Section 4: Chrysler and DodgeOEM Parts purchased outside of a Repair			**Award**		No Bid		No Bid	
4.1	Idler Pulley, part # 5281677AA	1	Unit Price	**$30.00**	**$30.00**	No Bid		No Bid	
4.2	Converter, part # 68296341AE	2	Unit Price	**$1,575.00**	**$3,150.00**	No Bid		No Bid	
4.3	Bearing Wheel, part # 5086772AA	2	Unit Price	**$57.00**	**$114.00**	No Bid		No Bid	
Total					**$3,294.00**	No Bid		No Bid	
5	Section 5: FordService using OEM Parts			No Bid		**Award**		No Bid	
5.1	Hourly Labor Rate, 8:00 AM to 5:00 PM, Monday through Friday	28	Hourly Rate	No Bid		**$169.00**		No Bid	
Total				No Bid			**$4,732.00**	No Bid	

Bid No. F2024116 Annual Contract for OEM Service and Parts

				Meador CDJR Fort Worth, TX HUB - No CO-OP - Yes		Rush Truck Centers of Texas, LP dba Rush Truck Center, Dallas Light & Medium Duty Dallas, TX HUB - No CO-OP - Yes		Fort Worth Nissan Fort Worth, TX HUB - No CO-OP - Yes	
Line #	**Description**	**QTY**	**UOM**	**Unit**	**Extended**	**Unit**	**Extended**	**Unit**	**Extended**
6	Section 6: FordOEM Parts purchased outside of a Repair			No Bid		**Award**		No Bid	
6.1	Rear Brake Pads, part # EU2Z2V200B	3	Unit Price	No Bid		**$73.78**	**$221.34**	No Bid	
6.2	Ignition Coil, part # 7T4Z12029F	1	Unit Price	No Bid		**$48.70**	**$48.70**	No Bid	
6.3	Fender liner, part # LB5Z16103C	1	Unit Price	No Bid		**$89.03**	**$89.03**	No Bid	
Total				No Bid			**$359.07**	No Bid	
7	Section 7: HondaService using OEM Parts			No Bid		No Bid		No Bid	
7.1	Hourly Labor Rate, 8:00 AM to 5:00 PM, Monday through Friday	1	Hourly Rate	No Bid		No Bid		No Bid	
Total				No Bid		No Bid		No Bid	
8	Section 8: HondaOEM Parts purchased outside of a Repair			No Bid		No Bid		No Bid	
8.1	Sensor T, part # 37840-RJH-006	1	Unit Price	No Bid		No Bid		No Bid	
8.2	Mirror Assembly R Door, part # 76200-S5D-A11	1	Unit Price	No Bid		No Bid		No Bid	
8.3	Actuator L, part # 76215-S5D-A11	1	Unit Price	No Bid		No Bid		No Bid	
Total				No Bid		No Bid		No Bid	
9	Section 9: HyundaiService using OEM Parts			No Bid		No Bid		No Bid	
9.1	Hourly Labor Rate, 8:00 AM to 5:00 PM, Monday through Friday	1	Hourly Rate	No Bid		No Bid		No Bid	
Total				No Bid		No Bid		No Bid	
10	Section 10: HyundaiOEM Parts purchased outside of a Repair			No Bid		No Bid		No Bid	
10.1	Right Rear Panel, part # 83481-D3001	1	Unit Price	No Bid		No Bid		No Bid	
10.2	High Pressure Fuel Pump, part # 35320-2GGAO	1	Unit Price	No Bid		No Bid		No Bid	

Bid No. F2024116 Annual Contract for OEM Service and Parts

				Meador CDJR Fort Worth, TX HUB - No CO-OP - Yes		Rush Truck Centers of Texas, LP dba Rush Truck Center, Dallas Light & Medium Duty Dallas, TX HUB - No CO-OP - Yes		Fort Worth Nissan Fort Worth, TX HUB - No CO-OP - Yes	
Line #	**Description**	**QTY**	**UOM**	**Unit**	**Extended**	**Unit**	**Extended**	**Unit**	**Extended**
10.3	Latch Assembly, part # 81310-D3010	1	Unit Price	No Bid		No Bid		No Bid	
Total				No Bid		No Bid		No Bid	
11	Section 11: KiaService using OEM Parts			No Bid		No Bid		No Bid	
11.1	Hourly Labor Rate, 8:00 AM to 5:00 PM, Monday through Friday	1	Hourly Rate	No Bid		No Bid		No Bid	
Total				No Bid		No Bid		No Bid	
12	Section 12: Kia OEM Parts purchased outside of a Repair			No Bid		No Bid		No Bid	
12.1	Pole Roof Antenna, part # 96201-B2100	1	Unit Price	No Bid		No Bid		No Bid	
12.2	Relay Assembly, part # 95230-2P050	1	Unit Price	No Bid		No Bid		No Bid	
12.3	Intake Maniforld Assembly, part # 28310-2GGA0	1	Unit Price	No Bid		No Bid		No Bid	
Total				No Bid		No Bid		No Bid	
13	Section 13: NissanService using OEM Parts			No Bid		No Bid		**Award**	
13.1	Hourly Labor Rate, 8:00 AM to 5:00 PM, Monday through Friday	1	Hourly Rate	No Bid		No Bid		**$194.95**	
Total				No Bid		No Bid			**$194.95**
14	Section 14: NissanOEM Parts purchased outside of a Repair			No Bid		No Bid		**Award**	
14.1	Cover-M, part # 96373-6CA9A	1	Unit Price	No Bid		No Bid		**$39.02**	**$39.02**
14.2	Door Seal R/R, part # 82830-9HS0B	1	Unit Price	No Bid		No Bid		**$52.14**	**$52.14**
14.3	Engine Cooling Fan, part # 21481-3TB0B	1	Unit Price	No Bid		No Bid		**$270.90**	**$270.90**
Total				No Bid		No Bid			**$362.06**
15	Section 15: ToyotaService using OEM Parts			No Bid		No Bid		No Bid	
15.1	Hourly Labor Rate, 8:00 AM to 5:00 PM, Monday through Friday	1	Hourly Rate	No Bid		No Bid		No Bid	

Bid No. F2024116 Annual Contract for OEM Service and Parts

Line #	Description	QTY	UOM	Meador CDJR Fort Worth, TX HUB - No CO-OP - Yes		Rush Truck Centers of Texas, LP dba Rush Truck Center, Dallas Light & Medium Duty Dallas, TX HUB - No CO-OP - Yes		Fort Worth Nissan Fort Worth, TX HUB - No CO-OP - Yes	
				Unit	Extended	Unit	Extended	Unit	Extended
Total				No Bid		No Bid		No Bid	
16	Section 16: ToyotaOEM Parts purchased outside of a Repair			No Bid		No Bid		No Bid	
16.1	Visor Assembly, part # 74320-33E80-B0	1	Unit Price	No Bid		No Bid		No Bid	
16.2	Tail Light Assembly, part # 81560-06350	1	Unit Price	No Bid		No Bid		No Bid	
16.3	Throttle Body, part # 22030-0T070	1	Unit Price	No Bid		No Bid		No Bid	
Total				No Bid		No Bid		No Bid	
17	Section 17: VolkswagenService using OEM Parts			No Bid		No Bid		No Bid	
17.1	Hourly Labor Rate, 8:00 AM to 5:00 PM, Monday through Friday	1	Hourly Rate	No Bid		No Bid		No Bid	
Total				No Bid		No Bid		No Bid	
18	Section 18: VolkswagenOEM Parts purchased outside of a Repair			No Bid		No Bid		No Bid	
18.1	Differential, part # 1EA-901-131-R	1	Unit Price	No Bid		No Bid		No Bid	
18.2	Steering Wheel Air Bag, part #10A-880-201-G-XEA	1	Unit Price	No Bid		No Bid		No Bid	
18.3	Drive Motor, part #1EA-901-131 N	1	Unit Price	No Bid		No Bid		No Bid	
Total				No Bid		No Bid		No Bid	

No bids were received from Bobcat of North Texas, Industrial Power LLC, Custom Trucks Unlimited of NRH, and Main Street Signs & Graphics.

Grapevine DCJ LLC withdrew their responses for Sections 1, 2, and 5-18.

TAKINGS IMPACT ASSESSMENT CHECKLIST

Complete this form for any county action that involves the adoption of a regulation, policy, guideline, court resolution, or order.

Project/Regulation Name: Bid No. F2024116 - Annual Contract for OEM Service and Parts - Countywide - Various Vendors - Exercise Second and Final Option for Renewal - Same Firm Fixed Prices and Hourly Rates

County Department: PURCHASING

Contact Person: Melissa Lee, C.P.M., A.P.P.

Phone Number for Contact Person: (817) 884-3245

Type of TIA Performed: (SHORT TIA) or FULL TIA. Circle one after answering the questions in Sections II and III below.

****

I. Stated Purpose

Attach to this checklist an explanation of the purpose of the regulation, policy, guideline, court resolution or order.

****

Note: The remainder of this Takings Impact Assessment Checklist should be completed in consultation with the Criminal District Attorney's Office.

II. Potential Effect on Private Real Property

1. Does the county action require a physical invasion, occupation or dedication of real property?

   Yes_____ No __√__

2. Does the county action limit or restrict a real property right, even partially or temporarily?

   Yes_____ No __√__

If you answered yes to either question, go to Section III. If you answered no to both, STOP HERE and circle SHORT TIA at the top of the form.

****

TARRANT COUNTY
COMMISSIONERS COURT COMMUNICATION

Court Date: December 9, 2025	**Court Order #:**	**Page:** 1 of 20
Department: Purchasing	**Prepared By:** Julie Nichols	**Approved By:** Christopher Lax, CPSM, CPSD, CPCP

SUBJECT:

Bid No. F2024117 - Annual Contract for Emergency Equipment - Countywide - Various Vendors - Exercise Second and Final Option for Renewal - Same Firm Fixed Prices and Discount from List Price

***** CONSENT AGENDA *****

COMMISSIONERS COURT ACTION REQUESTED

It is requested that the Commissioners Court approve renewal of Bid No. F2024117, Annual Contract for Emergency Equipment, for the second and final optional twelve (12) month period at the same firm fixed prices and discount from list price.

BACKGROUND

On July 16, 2024, the Commissioners Court, through Court Order #143510, awarded Bid No. F2024117, Annual Contract for Emergency Equipment, Countywide, to the following vendors:

Dana Safety Supply, Inc.
Defender Supply

The awards were based upon low bid meeting specifications and contained options to renew for two (2) additional twelve (12) month periods.

On May 20, 2025, the Commissioners Court, through Court Order #145279, approved the first renewal option.

The purpose of this agreement is to purchase equipment to outfit emergency vehicles. Examples of equipment that can be purchased includes light bars, surface mounts, spot lamps, and push bumpers.

The vendors notified Purchasing in writing that their prices will remain firm through September 30, 2027. Fleet Services and the four (4) Maintenance Precincts notified Purchasing in writing that they are pleased with the vendors and want to renew.

Therefore, it is the joint recommendation of Fleet Services, the four (4) Maintenance Precincts, and Purchasing that the Commissioners Court approve renewal of Bid No. F2024117, Annual Contract for Emergency Equipment, for another twelve (12) month period.

FISCAL IMPACT

Expenses for last twelve (12) months were $83,506.27. Sixteen (16) government entities currently utilize this bid. Expenses for other entities utilizing this contract last year were $3,575,064.23. Funding is available in the following accounts:

10000-2026 General Fund/6840200000 Fleet Services/576171 Vehicle Maintenance
26100-2026 Road and Bridge Fund/6110300000 Precinct 1 Maintenance/523011 Parts and Supplies
26100-2026 Road and Bridge Fund/6210300000 Precinct 2 Maintenance/523011 Parts and Supplies
26100-2026 Road and Bridge Fund/6310300000 Precinct 3 Maintenance/523011 Parts and Supplies
26100-2026 Road and Bridge Fund/6410300000 Precinct 4 Maintenance/523011 Parts and Supplies

Attachments

F2024117- Backup.pdf

TARRANT COUNTY PURCHASING DEPARTMENT
100 E. Weatherford St. #303 • Fort Worth, TX 76196 • (817) 884-1414 • (817) 884-2629 (Fax)

Melissa Lee, C.P.M., A.P.P.
Purchasing Agent

Chris Lax, CPSM, CPSD, CPCP
Assistant Purchasing Agent

October 21, 2025

Dana Safety Supply, Inc.
4809 Koger Blvd
Greensboro, NC 27409
(813) 348-4866
Contact Name: Mark Sevigny
msevigny@danasafetysupply.com
Vendor # 7014505

Re: BID NO. F2024117 Annual Contract for Emergency Equipment

Dear Mark Sevigny:

Referenced bid was for twelve (12) months with two (2) options to renew for additional twelve (12) months each. The original contract was for the period of October 1, 2024 through September 30, 2025. The effective dates of the first renewal option took place October 1, 2025 through September 30, 2026. The second and final renewal option will be effective October 1, 2026 through September 30, 2027.

☑ Yes, Dana Safety Supply, Inc. will accept the offer to extend the same firm fixed prices and discount from list price through the renewal period. **Please include a current 1295 Form with your response.**

☐ No, Dana Safety Supply, Inc. will NOT accept the offer to extend the same firm fixed prices and discount from list price through the renewal period.

Are any other governmental entities currently utilizing this contract? ☐ Yes ☑ No
If yes, please return a listing of the participating entities with this letter.

Please fax or email your signed response.

Sincerely,

Julie Nichols

Julie Nichols, Senior Buyer
(P) 817.884.1133
(F) 817.884.1133
(E) jmnichols@tarrantcountytx.gov

Name: Mark Sevigny
Phone number: 813-348-4866
E-mail: bids@danasafetysupply.com
Date: 10-21-25

TARRANT COUNTY PURCHASING DEPARTMENT
100 E. Weatherford St. #303 • Fort Worth, TX 76196 • (817) 884-1414 • (817) 884-2629 (Fax)

Melissa Lee, C.P.M., A.P.P.
Purchasing Agent

Chris Lax, CPSM, CPSD, CPCP
Assistant Purchasing Agent

October 23, 2025

Defender Supply
845 FM407 W
Argyle, TX 76226
(903) 564-5641
Contact Name: Bryan Brooks
bryan@defendersupply.com
Vendor # 7011170

Re: BID NO. F2024117 Annual Contract for Emergency Equipment

Dear Bryan Brooks:

Referenced bid was for twelve (12) months with two (2) options to renew for additional twelve (12) months each. The original contract was for the period of October 1, 2024 through September 30, 2025. The effective dates of the first renewal option took place October 1, 2025 through September 30, 2026. The second and final renewal option will be effective October 1, 2026 through September 30, 2027.

☒ Yes, Defender Supply will accept the offer to extend the same firm fixed prices and discount from list price through the renewal period. **Please include a current 1295 Form with your response.**

☐ No, Defender Supply will NOT accept the offer to extend the same firm fixed prices and discount from list price through the renewal period.

Are any other governmental entities currently utilizing this contract? ☒ Yes ☐ No
If yes, please return a listing of the participating entities with this letter.

Please fax or email your signed response.

Sincerely,

Julie Nichols

Julie Nichols, Senior Buyer
(P) 817.884.1133
(F) 817.884.1133
(E) jmnichols@tarrantcountytx.gov

Name: Bryan Brooks / Mike Hewitt
Phone number: 903-771-1089
E-mail: mike@defendersupply.com
Date: 10/23/25

Government Spending

Amarillo Police Department $469,094.61
Collin County $171,232.34
Cook County $247,017.48
Coppell Police Department $309,401.46
Denton County $77,165.43
Town of Flower Mound $380,870.73
Frisco Fire Department $16,037.04
City of Gainesville $143,619.40
Guadalupe County $52,430.62
Irving Police Department $41,888.60
Lewisville Police Department $902,669.58
Lewisville Fire Department $35,316.96
Mansfield Fire Department $47,124.30
City of Mesquite $38,957.14
City of Plano $472,712.05
Rockport Police Department $169,526.49

Grand Total: $3,575,064.23

Memorandum

To: Keith Harris
Dept: Fleet Services
From: Julie Nichols, Sr. Buyer, Purchasing Department
Date: 10/20/2025
Re: Bid No. F2024117, Annual Contract for Emergency Equipment

---

The above referenced contract will expire on September 30, 2026. This contract included two (2) options to renew with the vendor for additional twelve (12) month terms. The original contract was for the period of October 1, 2024 through September 30, 2025. The first renewal term commenced October 1, 2025 through September 30, 2026. The second and final renewal term will commence October 1, 2026 and expire September 30, 2027.

If you wish to exercise this option to renew and continue this contract with the vendor listed below for twelve more months, please check the appropriate item and email or fax this form back to me at (817) 884-1133 by October 24, 2025:

Dana Safety Supply
Defender Supply

_X_ Yes, I wish to continue the current contract with the above mentioned vendor for the second and final renewal term of the contract. Funds to support this contract will be provided by the following account:

10000-2026 General Fund/6840200000 Central Garage/576171 Vehicle Maintenance

_____ No, I do not wish to continue the current contract with the above-mentioned vendor for the following reason(s).

_____

SIGNATURE: Keith W. Harris DATE: 10/20/2025

Memorandum

To: Richard Hatcher or Misael Linan
Dept: Precinct 1 Maintenance
From: Julie Nichols, Sr. Buyer, Purchasing Department
Date: 10/20/2025
Re: Bid No. F2024117, Annual Contract for Emergency Equipment

---

The above-mentioned contract will expire on September 30, 2026. This contract included two (2) options to renew with the vendor for additional twelve (12) month terms. The original contract was for the period of October 1, 2024 through September 30, 2025. The first renewal term commenced October 1, 2025, through September 30, 2026. The second and final renewal term will commence October 1, 2026, and expire September 30, 2027.

If you wish to exercise this option to renew and continue this contract with the vendor listed below for twelve more months, please check the appropriate item and email or fax this form back to me at (817) 884-1133 by October 24, 2025:

Dana Safety Supply
Defender Supply

✓ Yes, I wish to continue the current contract with the above-mentioned vendor for the second and final renewal term of the contract. Funds to support this contract will be provided by the following account:

26100-2026 Road and Bridge Fund/6110300000 Precinct 1 Maintenance/523011 Parts and Supplies

_____ No, I do not wish to continue the current contract with the above-mentioned vendor for the following reason(s).

SIGNATURE: Richard T. Hatcher DATE: Oct 20, 2025

Richard T. Hatcher

Memorandum

To: Ronald (Ron) Edwards or Jason Murphy
Dept: Precinct 2 Maintenance
From: Julie Nichols, Sr. Buyer, Purchasing Department
Date: 10/20/2025
Re: Bid No. F2024117, Annual Contract for Emergency Equipment

---

The above referenced contract will expire on September 30, 2026. This contract included two (2) options to renew with the vendor for additional twelve (12) month terms. The original contract was for the period of October 1, 2024 through September 30, 2025. The first renewal term commenced October 1, 2025 through September 30, 2026. The second and final renewal term will commence October 1, 2026 and expire September 30, 2027.

If you wish to exercise this option to renew and continue this contract with the vendor listed below for twelve more months, please check the appropriate item and email or fax this form back to me at (817) 884-1133 by October 24, 2025:

Dana Safety Supply
Defender Supply

✓ Yes, I wish to continue the current contract with the above mentioned vendor for the second and final renewal term of the contract. Funds to support this contract will be provided by the following account:

26100-2026 Road and Bridge Fund/6210300000 Precinct 2 Maintenance/523011 Parts and Supplies

_____ No, I do not wish to continue the current contract with the above-mentioned vendor for the following reason(s).

SIGNATURE: Ron Edwards DATE: 10-20-25

Memorandum

To: Mayo Perez Jr
Dept: Precinct 3 Maintenance
From: Julie Nichols, Sr. Buyer, Purchasing Department
Date: 10/20/2025
Re: Bid No. F2024117, Annual Contract for Emergency Equipment

---

The above referenced contract will expire on September 30, 2026. This contract included two (2) options to renew with the vendor for additional twelve (12) month terms. The original contract was for the period of October 1, 2024 through September 30, 2025. The first renewal term commenced October 1, 2025 through September 30, 2026. The second and final renewal term will commence October 1, 2026 and expire September 30, 2027.

If you wish to exercise this option to renew and continue this contract with the vendor listed below for twelve more months, please check the appropriate item and email or fax this form back to me at (817) 884-1133 by October 24, 2025:

Dana Safety Supply
Defender Supply

__✓__ Yes, I wish to continue the current contract with the above mentioned vendor for the second and final renewal term of the contract. Funds to support this contract will be provided by the following account:

26100-2026 Road and Bridge Fund/6310300000 Precinct 3 Maintenance/523011 Parts and Supplies

_____ No, I do not wish to continue the current contract with the above-mentioned vendor for the following reason(s).

SIGNATURE: Mayo Perez Jr DATE: 10/20/25

Memorandum

To: Ned Pyle
Dept: Precinct 4 Maintenance
From: Julie Nichols, Sr. Buyer, Purchasing Department
Date: 10/20/2025
Re: Bid No. F2024117, Annual Contract for Emergency Equipment

---

The above referenced contract will expire on September 30, 2026. This contract included two (2) options to renew with the vendor for additional twelve (12) month terms. The original contract was for the period of October 1, 2024 through September 30, 2025. The first renewal term commenced October 1, 2025 through September 30, 2026. The second and final renewal term will commence October 1, 2026 and expire September 30, 2027.

If you wish to exercise this option to renew and continue this contract with the vendor listed below for twelve more months, please check the appropriate item and email or fax this form back to me at (817) 884-1133 by October 24, 2025:

Dana Safety Supply
Defender Supply

✓ Yes, I wish to continue the current contract with the above mentioned vendor for the second and final renewal term of the contract. Funds to support this contract will be provided by the following account:

26100-2026 Road and Bridge Fund/6410300000 Precinct 4 Maintenance/523011 Parts and Supplies

_____ No, I do not wish to continue the current contract with the above-mentioned vendor for the following reason(s).

SIGNATURE: Ned Pyle DATE: 10-20-25

Bid No. F2024117 Annual Contract for Emergency Equipment

				Award		Award	
				Dana Safety Supply, Inc. Greensboro, NC HUB - No CO-OP - Yes		Defender Supply Argyle, TX HUB - No CO-OP - Yes	
				Total Price	$298,083.69	Total Price	$372,267.89
Line #	Description	QTY	UOM	Unit	Extended	Unit	Extended
1	Whelen, 54-inch Light Bar, part # EB2SP3J	9	EA	No Bid	No Bid	$2,453.27	$22,079.43
	Alternate	9	EA	$1,812.50	$16,312.50	No Bid	No Bid
	Alternate Make/Model			SoundOff Signal/mPower-55DCP		No Bid	No Bid
2	Whelen, 48-inch Light Bar, part # EB8SP3J	82	EA	No Bid	No Bid	$2,394.58	$196,355.56
	Alternate	82	EA	$1,812.50	$148,625.00	No Bid	No Bid
	Alternate Make/Model			SoundOff Signal/mPower-48DCP		No Bid	No Bid
3	Havis, Console, part # PKG-CON-141	40	EA	$504.40	$20,176.00	$591.89	$23,675.60
4	Tomar, 1 inch X 6-inch Amber 6 LED Remote Surface Mount, part # RECT-16LS-AA	21	EA	$120.12	$2,522.52	$118.65	$2,491.65
	Alternate	21	EA	No Bid	No Bid	$123.43	$2,592.03
	Alternate Make/Model			No Bid	No Bid	Federal Signal/MPS63U-	
5	Tomar, 1 inch X 6-inch Blue 6 LED Remote Surface Mount, part # RECT-16LS-BB	21	EA	$120.12	$2,522.52	$118.65	$2,491.65
	Alternate	21	EA	No Bid	No Bid	No Bid	No Bid
	Alternate Make/Model			No Bid	No Bid	No Bid	No Bid
6	Tomar, 1 inch X 6 inch Red 6 LED Remote Surface Mount, part # RECT-16LS-RR	13	EA	$120.12	$1,561.56	$118.65	$1,542.45
	Alternate	13	EA	No Bid	No Bid	No Bid	No Bid
	Alternate Make/Model			No Bid	No Bid	No Bid	No Bid
7	Unity, Clear Spot Lamp, part # U-7682	20	EA	$54.16	$1,083.20	$33.73	$674.60
	Alternate	20	EA	No Bid	No Bid	No Bid	No Bid
	Alternate Make/Model			No Bid	No Bid	No Bid	No Bid
8	Whelen, Strap Kit, part # STPKT101	8	EA	No Bid	No Bid	$61.76	$494.08
	Alternate	8	EA	$78.00	$624.00	No Bid	No Bid
	Alternate Make/Model			Sound Off Signal/PNFLBF38		No Bid	No Bid

Bid No. F2024117 Annual Contract for Emergency Equipment

				A & A Auto Parts Stores INC Exeter, PA HUB - No		Stolz Telecom Inc Denton, TX HUB - No	
				Total Price	*$140,141.25	**Total Price**	*$383,631.94
Line #	**Description**	**QTY**	**UOM**	**Unit**	**Extended**	**Unit**	**Extended**
1	Whelen, 54-inch Light Bar, part # EB2SP3J	9	EA	No Bid	No Bid	$2,788.88	$25,099.92
	Alternate	9	EA	No Bid	No Bid	No Bid	No Bid
	Alternate Make/Model			No Bid	No Bid	No Bid	No Bid
2	Whelen, 48-inch Light Bar, part # EB8SP3J	82	EA	No Bid	No Bid	$2,722.17	$223,217.94
	Alternate	82	EA	No Bid	No Bid	No Bid	No Bid
	Alternate Make/Model			No Bid	No Bid	No Bid	No Bid
3	Havis, Console, part # PKG-CON-141	40	EA	$305.00	$12,200.00	$497.76	$19,910.40
4	Tomar, 1 inch X 6-inch Amber 6 LED Remote Surface Mount, part # RECT-16LS-AA	21	EA	No Bid	No Bid	No Bid	No Bid
	Alternate	21	EA	No Bid	No Bid	$99.12	$2,081.52
	Alternate Make/Model			No Bid	No Bid	Whelen/TLIA	
5	Tomar, 1 inch X 6-inch Blue 6 LED Remote Surface Mount, part # RECT-16LS-BB	21	EA	No Bid	No Bid	No Bid	No Bid
	Alternate	21	EA	No Bid	No Bid	$99.12	$2,081.52
	Alternate Make/Model			No Bid	No Bid	Whelen/TLIB	
6	Tomar, 1 inch X 6 inch Red 6 LED Remote Surface Mount, part # RECT-16LS-RR	13	EA	No Bid	No Bid	No Bid	No Bid
	Alternate	13	EA	No Bid	No Bid	$99.16	$1,289.08
	Alternate Make/Model			No Bid	No Bid	Whelen/TLIR	
7	Unity, Clear Spot Lamp, part # U-7682	20	EA	$34.00	$680.00	No Bid	No Bid
	Alternate	20	EA	No Bid	No Bid	$181.13	$3,622.60
	Alternate Make/Model			No Bid	No Bid	Whelen/P46SC	
8	Whelen, Strap Kit, part # STPKT101	8	EA	No Bid	No Bid	$70.21	$561.68
	Alternate	8	EA	No Bid	No Bid	No Bid	No Bid
	Alternate Make/Model			No Bid	No Bid	No Bid	No Bid

Bid No. F2024117 Annual Contract for Emergency Equipment

				Big Country Supply Abilene, TX HUB - No	
				Total Price	$637,175.97
Line #	**Description**	**QTY**	**UOM**	**Unit**	**Extended**
1	Whelen, 54-inch Light Bar, part # EB2SP3J	9	EA	$5,530.40	$49,773.60
	Alternate	9	EA	No Bid	No Bid
	Alternate Make/Model			No Bid	No Bid
2	Whelen, 48-inch Light Bar, part # EB8SP3J	82	EA	$5,048.80	$414,001.60
	Alternate	82	EA	No Bid	No Bid
	Alternate Make/Model			No Bid	No Bid
3	Havis, Console, part # PKG-CON-141	40	EA	$806.65	$32,266.00
4	Tomar, 1 inch X 6-inch Amber 6 LED Remote Surface Mount, part # RECT-16LS-AA	21	EA	$106.78	$2,242.38
	Alternate	21	EA	No Bid	No Bid
	Alternate Make/Model			No Bid	No Bid
5	Tomar, 1 inch X 6-inch Blue 6 LED Remote Surface Mount, part # RECT-16LS-BB	21	EA	$106.78	$2,242.38
	Alternate	21	EA	No Bid	No Bid
	Alternate Make/Model			No Bid	No Bid
6	Tomar, 1 inch X 6 inch Red 6 LED Remote Surface Mount, part # RECT-16LS-RR	13	EA	$106.78	$1,388.14
	Alternate	13	EA	No Bid	No Bid
	Alternate Make/Model			No Bid	No Bid
7	Unity, Clear Spot Lamp, part # U-7682	20	EA	$79.16	$1,583.20
	Alternate	20	EA	No Bid	No Bid
	Alternate Make/Model			No Bid	No Bid
8	Whelen, Strap Kit, part # STPKT101	8	EA	$95.20	$761.60
	Alternate	8	EA	No Bid	No Bid
	Alternate Make/Model			No Bid	No Bid

Bid No. F2024117 Annual Contract for Emergency Equipment

				Award Dana Safety Supply, Inc. Greensboro, NC HUB - No CO-OP - Yes		Award Defender Supply Argyle, TX HUB - No CO-OP - Yes	
				Total Price	**$298,083.69**	**Total Price**	**$372,267.89**
9	Go Rino 3100 Series Black Push Bumper, part # 3130T	40	EA	**$344.39**	**$13,775.60**	**$398.03**	**$15,921.20**
	Alternate	40	EA	**No Bid**	**No Bid**	**$848.56**	**$33,942.40**
	Alternate Make/Model			**No Bid**	**No Bid**	**Pro-Gard/PRPSP5704T21A**	
10	Go Rhino 600 Wheel to Wheel Side Steps, part # 61147B	73	EA	**$217.29**	**$15,862.17**	**$303.26**	**$22,137.98**
	Alternate	73	EA	**No Bid**	**No Bid**	**No Bid**	**No Bid**
	Alternate Make/Model			**No Bid**	**No Bid**	**No Bid**	**No Bid**
11	Havis Mount for a floor plate for 2019-2024 Chevrolet Silverado 2500, part # HV-C-HDM-1003	54	EA	**$146.90**	**$7,932.60**	**$142.15**	**$7,676.10**
12	Whelen, Mini Century 23-foot amber/blue, part #MC23VM	17	EA	**No Bid**	**No Bid**	**$389.25**	**$6,617.25**
	Alternate	17	EA	**$301.00**	**$5,117.00**	**No Bid**	**No Bid**
	Alternate Make/Model			**Sound Off Signal/EPL7000M**		**No Bid**	**No Bid**
13	Setina Dual Gun Lock, part # GK10301S1U	9	EA	**$407.20**	**$3,664.80**	**$345.61**	**$3,110.49**
14	Setina Freestanding Gun Rack Mount, part # GF1092TAH21	12	EA	**$215.20**	**$2,582.40**	**$182.65**	**$2,191.80**
15	Code 3, Surface Mount Light Blue/Amber, part # CD3802AB	84	EA	**$109.42**	**$9,191.28**	**$102.53**	**$8,612.52**
	Alternate	84	EA	**No Bid**	**No Bid**	**No Bid**	**No Bid**
	Alternate Make/Model			**No Bid**	**No Bid**	**No Bid**	**No Bid**
16	Code 3, Surface Mount Light Red/Blue part # M180SMC-RB	128	EA	**$154.70**	**$19,801.60**	**$144.92**	**$18,549.76**
	Alternate	128	EA	**No Bid**	**No Bid**	**No Bid**	**No Bid**
	Alternate Make/Model			**No Bid**	**No Bid**	**No Bid**	**No Bid**
17	Code 3 Siren Speaker, part # C3100X	25	EA	**$212.42**	**$5,310.50**	**$199.02**	**$4,975.50**
	Alternate	25	EA	**$138.49**	**$3,462.25**	**No Bid**	**No Bid**
	Alternate Make/Model			**Sound Off Signal/ETSS100J**		**No Bid**	**No Bid**

Bid No. F2024117 Annual Contract for Emergency Equipment

				A & A Auto Parts Stores INC Exeter, PA HUB - No		Stolz Telecom Inc Denton, TX HUB - No	
				Total Price	*$140,141.25	**Total Price**	*$383,631.94
9	Go Rino 3100 Series Black Push Bumper, part # 3130T	40	EA	$310.00	$12,400.00	No Bid	No Bid
	Alternate	40	EA	No Bid	No Bid	$485.10	$19,404.00
	Alternate Make/Model			No Bid	No Bid	Setina/BK0534DRT191500	
10	Go Rhino 600 Wheel to Wheel Side Steps, part # 61147B	73	EA	$232.00	$16,936.00	No Bid	No Bid
	Alternate	73	EA	No Bid	No Bid	$244.49	$17,847.77
	Alternate Make/Model			No Bid	No Bid	Westin/21-23565	
11	Havis Mount for a floor plate for 2019-2024 Chevrolet Silverado 2500, part # HV-C-HDM-1003	54	EA	No Bid	No Bid	$144.64	$7,810.56
12	Whelen, Mini Century 23-foot amber/blue, part #MC23VM	17	EA	$527.00	$8,959.00	$442.50	$7,522.50
	Alternate	17	EA	No Bid	No Bid	No Bid	No Bid
	Alternate Make/Model			No Bid	No Bid	No Bid	No Bid
13	Setina Dual Gun Lock, part # GK10301S1U	9	EA	No Bid	No Bid	$458.10	$4,122.90
14	Setina Freestanding Gun Rack Mount, part # GF1092TAH21	12	EA	No Bid	No Bid	$242.10	$2,905.20
15	Code 3, Surface Mount Light Blue/Amber, part # CD3802AB	84	EA	$159.00	$13,356.00	No Bid	No Bid
	Alternate	84	EA	No Bid	No Bid	$115.05	$9,664.20
	Alternate Make/Model			No Bid	No Bid	Whelen/TLI2M	
16	Code 3, Surface Mount Light Red/Blue part # M180SMC-RB	128	EA	$213.00	$27,264.00	No Bid	No Bid
	Alternate	128	EA	No Bid	No Bid	$115.05	$14,726.40
	Alternate Make/Model			No Bid	No Bid	Whelen/TLI2J	
17	Code 3 Siren Speaker, part # C3100X	25	EA	$292.00	$7,300.00	No Bid	No Bid
	Alternate	25	EA	No Bid	No Bid	$237.77	$5,944.25
	Alternate Make/Model			No Bid	No Bid	Whelen/SA315P	

Bid No. F2024117 Annual Contract for Emergency Equipment

				Big Country Supply Abilene, TX HUB - No	
				Total Price	$637,175.97
9	Go Rino 3100 Series Black Push Bumper, part # 3130T	40	EA	$485.93	$19,437.20
	Alternate	40	EA	No Bid	No Bid
	Alternate Make/Model			No Bid	No Bid
10	Go Rhino 600 Wheel to Wheel Side Steps, part # 61147B	73	EA	$370.23	$27,026.79
	Alternate	73	EA	No Bid	No Bid
	Alternate Make/Model			No Bid	No Bid
11	Havis Mount for a floor plate for 2019-2024 Chevrolet Silverado 2500, part # HV-C-HDM-1003	54	EA	$192.10	$10,373.40
12	Whelen, Mini Century 23-foot amber/blue, part #MC23VM	17	EA	$675.00	$11,475.00
	Alternate	17	EA	$675.00	$11,475.00
	Alternate Make/Model			Whelen/MC23V	
13	Setina Dual Gun Lock, part # GK10301S1U	9	EA	$432.65	$3,893.85
14	Setina Freestanding Gun Rack Mount, part # GF1092TAH21	12	EA	$228.65	$2,743.80
15	Code 3, Surface Mount Light Blue/Amber, part # CD3802AB	84	EA	$94.28	$7,919.52
	Alternate	84	EA	No Bid	No Bid
	Alternate Make/Model			No Bid	No Bid
16	Code 3, Surface Mount Light Red/Blue part # M180SMC-RB	128	EA	$133.28	$17,059.84
	Alternate	128	EA	No Bid	No Bid
	Alternate Make/Model			No Bid	No Bid
17	Code 3 Siren Speaker, part # C3100X	25	EA	$183.05	$4,576.25
	Alternate	25	EA	No Bid	No Bid
	Alternate Make/Model			No Bid	No Bid

Bid No. F2024117 Annual Contract for Emergency Equipment

				Award		Award	
				Dana Safety Supply, Inc. Greensboro, NC HUB - No CO-OP - Yes		**Defender Supply Argyle, TX HUB - No CO-OP - Yes**	
				Total Price	**$298,083.69**	**Total Price**	**$372,267.89**
18	Code 3 Siren, part # Z3SR-1	25	EA	**$1,043.41**	**$26,085.25**	**$1,005.00**	**$25,125.00**
	Alternate	25	EA	**$709.00**	**$17,725.00**	**No Bid**	**No Bid**
Alternate Make/Model				**SoundOff**		**No Bid**	**No Bid**
19	Code 3 Red/Blue Lights, part # MR6MC-RB	25	EA	**$119.17**	**$2,979.25**	**$111.66**	**$2,791.50**
	Alternate	25	EA	**No Bid**	**No Bid**	**No Bid**	**No Bid**
Alternate Make/Model				**No Bid**	**No Bid**	**No Bid**	**No Bid**
20	Able 2 Products, 3 Accessory Outlet 12-volt box, part # 140553	84	EA	**$17.61**	**$1,479.24**	**$26.93**	**$2,262.12**
Whelen brand parts percentage discount offered				20%		48.1%	
Havis brand parts percentage discount offered				35%		37.1%	
Tomar brand parts percentage discount offered				10%		11.1%	
Unity brand parts percentage discount offered				35%		49.6%	
Go Rino brand parts percentage discount offered				18%		27.1%	
Setina brand parts percentage discount offered				20%		32.1%	
Code 3 brand parts percentage discount offered				35%		39.1%	
Able 2 brand parts percentage discount offered				19%		38.1%	
Westin brand parts percentage discount offered				No Bid		No Bid	
Federal Signal brand parts percentage discount offered				No Bid		46.1%	
Pro-Gard brand parts percentage discount offered				No Bid		27.1%	
SoundOff Signal brand parts percentage discount offered				48%		No Bid	

*A & A Auto Parts Stores INC and Stolz Telecom INC were deemed nonresponsive for failing to provide pricing for all items as required per specifications.

No bids were submitted by O'Reilly Auto Parts, Industrial Power Truck & Equipment, MPH Industries, and Main Street Signs & Graphics.

Bid No. F2024117 Annual Contract for Emergency Equipment

				A & A Auto Parts Stores INC Exeter, PA HUB - No		Stolz Telecom Inc Denton, TX HUB - No	
				Total Price	*$140,141.25	**Total Price**	*$383,631.94
18	Code 3 Siren, part # Z3SR-1	25	EA	$1,478.00	$36,950.00	No Bid	No Bid
	Alternate	25	EA	No Bid	No Bid	$614.19	$15,354.75
Alternate Make/Model				No Bid	No Bid	Whelen/HHS4206	
19	Code 3 Red/Blue Lights, part # MR6MC-RB	25	EA	$163.85	$4,096.25	No Bid	No Bid
	Alternate	25	EA	No Bid	No Bid	$18.59	$464.75
Alternate Make/Model				No Bid	No Bid	Whelen/I2J	
20	Able 2 Products, 3 Accessory Outlet 12-volt box, part # 140553	84	EA	No Bid	No Bid	No Bid	No Bid
Whelen brand parts percentage discount offered				35%		41%	
Havis brand parts percentage discount offered				35%		36%	
Tomar brand parts percentage discount offered				No Bid		No Bid	
Unity brand parts percentage discount offered				0%		No Bid	
Go Rino brand parts percentage discount offered				27%		No Bid	
Setina brand parts percentage discount offered				No Bid		10%	
Code 3 brand parts percentage discount offered				27%		No Bid	
Able 2 brand parts percentage discount offered				No Bid		No Bid	
Westin brand parts percentage discount offered				No Bid		25%	
Federal Signal brand parts percentage discount offered				No Bid		No Bid	
Pro-Gard brand parts percentage discount offered				No Bid		No Bid	
SoundOff Signal brand parts percentage discount offered				No Bid		No Bid	

*A & A Auto Parts Stores INC and Stolz Telecom INC were deemed nonresponsive for failing to provide pricing for all items as required per specifications.

No bids were submitted by O'Reilly Auto Parts, Industrial Power Truck & Equipment, MPH Industries, and Main Street Signs & Graphics.

Bid No. F2024117 Annual Contract for Emergency Equipment

				Big Country Supply Abilene, TX HUB - No	
				Total Price	$637,175.97
18	Code 3 Siren, part # Z3SR-1	25	EA	$924.14	$23,103.50
	Alternate	25	EA	No Bid	No Bid
Alternate Make/Model				No Bid	No Bid
19	Code 3 Red/Blue Lights, part # MR6MC-RB	25	EA	$102.68	$2,567.00
	Alternate	25	EA	No Bid	No Bid
Alternate Make/Model				No Bid	No Bid
20	Able 2 Products, 3 Accessory Outlet 12-volt box, part # 140553	84	EA	$32.63	$2,740.92
Whelen brand parts percentage discount offered				20%	
Havis brand parts percentage discount offered				15%	
Tomar brand parts percentage discount offered				20%	
Unity brand parts percentage discount offered				5%	
Go Rino brand parts percentage discount offered				11%	
Setina brand parts percentage discount offered				15%	
Code 3 brand parts percentage discount offered				44%	
Able 2 brand parts percentage discount offered				25%	
Westin brand parts percentage discount offered				No Bid	
Federal Signal brand parts percentage discount offered				No Bid	
Pro-Gard brand parts percentage discount offered				No Bid	
SoundOff Signal brand parts percentage discount offered				No Bid	

*A & A Auto Parts Stores INC and Stolz Telecom INC were deemed nonresponsive for failing to provide pricing for all items as required per specifications.

No bids were submitted by O'Reilly Auto Parts, Industrial Power Truck & Equipment, MPH Industries, and Main Street Signs & Graphics.

TAKINGS IMPACT ASSESSMENT CHECKLIST

Complete this form for any county action that involves the adoption of a regulation, policy, guideline, court resolution, or order.

Project/Regulation Name: Bid No. F2024117 - Annual Contract for Emergency Equipment - Countywide - Various Vendors - Exercise Second and Final Option for Renewal - Same Firm Fixed Prices and Discount from List Price

County Department: PURCHASING

Contact Person: Melissa Lee, C.P.M., A.P.P.

Phone Number for Contact Person: (817) 884-3245

Type of TIA Performed: (SHORT TIA) or FULL TIA. Circle one after answering the questions in Sections II and III below.

****

I. Stated Purpose

Attach to this checklist an explanation of the purpose of the regulation, policy, guideline, court resolution or order.

****

Note: The remainder of this Takings Impact Assessment Checklist should be completed in consultation with the Criminal District Attorney's Office.

II. Potential Effect on Private Real Property

1. Does the county action require a physical invasion, occupation or dedication of real property?

   Yes_____ No __√__

2. Does the county action limit or restrict a real property right, even partially or temporarily?

   Yes_____ No __√__

If you answered yes to either question, go to Section III. If you answered no to both, STOP HERE and circle SHORT TIA at the top of the form.

****

TARRANT COUNTY
COMMISSIONERS COURT COMMUNICATION

Court Date: December 9, 2025	**Court Order #:**	**Page:** 1 of 6
Department: Purchasing	**Prepared By:** Elizabeth Callarman	**Approved By:** Christopher Lax, CPSM, CPSD, CPCP

SUBJECT:

RFP No. F2024134 - Annual Contract for Facilities Construction Projects Management Software - Facilities Management - Systemates, Inc. - Exercise First Option for Renewal - Same Contract Terms

***** CONSENT AGENDA *****

COMMISSIONERS COURT ACTION REQUESTED

It is requested that the Commissioners Court approve renewal of RFP No. F2024134, Annual Contract for Facilities Construction Projects Management Software, for the first optional twelve (12) month period at the same contract terms.

BACKGROUND

On January 28, 2025, the Commissioners Court, through Court Order #144636, awarded RFP No. F2024134, Annual Contract for Facilities Construction Projects Management Software, for Facilities Management, to Systemates, Inc.

The award was based upon evaluation criteria set forth in the RFP specifications and contained options to renew for two (2) additional twelve (12) month periods.

The purpose of this contract is to implement a construction project management software for Facilities Management. This software aims to streamline and enhance the planning, execution, and monitoring of construction projects through several key functions, including project planning and scheduling, resource management, budget tracking, document storage, and real-time monitoring.

The vendor notified Purchasing in writing that their prices will remain firm through January 28, 2027. Facilities Management notified Purchasing in writing that they are pleased with the vendor and want to renew.

Therefore, it is the joint recommendation of Facilities Management and Purchasing that the Commissioners Court approve renewal of RFP No. F2024134, Annual Contract for Facilities Construction Projects Management Software, for another twelve (12) month period.

Subject to continued funding by the Commissioners Court, this agreement shall automatically renew January 27, 2027 for one (1) twelve (12) month period ending on January 28, 2028, unless sooner terminated by either party as provided herein.

FISCAL IMPACT

Expenses for the last twelve (12) months were $71,955.00. Funding is available in account 10000-2026 General Fund/1860100000 Facilities Admin/578025 Software Maintenance & Licenses.

Attachments

F2024134 all again.pdf

TARRANT COUNTY PURCHASING DEPARTMENT
100 E. Weatherford St. #303 • Fort Worth, TX 76196 • (817) 884-1414 • (817) 884-2629 (Fax)

Melissa Lee, C.P.M., A.P.P.
Purchasing Agent

Chris Lax, MS.SCM, CPSM, CPSD, CPCP
Assistant Purchasing Agent

November 4, 2025

Hemant Bhave
Systemates, Inc.
2435 N Central Expy, Suite 640
Richardson, TX 75080

Re: RFP No. F2024134 Annual Contract for Facilities Construction Projects Management Software

Dear Mr. Bhave:

Referenced bid was for twelve (12) months with two (2) options to renew for an additional twelve (12) months each. The original contract is for the period of February 1, 2025, through January 31, 2026. The effective dates for the first renewal option will run from February 1, 2026, through January 31, 2027.

Tarrant County Purchasing Department hereby extends an invitation to Systemates, Inc., to accept the first option for an additional one (1) year period as the primary vendor for this bid as awarded on January 28. 2025. Systemates, Inc. acknowledges formal renewal of the option, and any contract is contingent upon review and approval by the Tarrant County Commissioners Court at a later date. Please mark the appropriate response below and provide your signature above your printed name. All prices must remain firm for the optional renewal period through January 31, 2027.

☑ Yes, Systemates, Inc. will accept the offer to extend the same contract terms through January 31, 2027. **Please include a current 1295 Form with your response.**

☐ No, Systemates, Inc. will NOT accept the offer to extend the same contract terms through January 31, 2027.

Are any other governmental entities currently utilizing this contract? ☐ Yes ☑ No
If Yes, please return a listing of the participating entities with this letter.

Please email or fax your signed response.

Sincerely,

Elizabeth Callarman, Buyer
Tarrant County
817-884-2620
817-212-3049 (fax)

Hemant Bhave,
Systemates, Inc.

11/13/2025
Date

Memorandum

To: Jon Hendrickson

Dept: Tarrant County Facilities Management

From: Elizabeth Callarman, Buyer, Purchasing Department

Date: November 4, 2025

Re: Renewal of RFP No. F2024134 Annual Contract for Facilities Construction Projects Management Software for Facilities Management

---

The above referenced contract will expire on January 31, 2026. This contract included two (2) options to renew with the vendor for additional twelve (12) month terms. The first renewal term would commence February 1, 2026, and would expire January 31, 2027.

If you wish to exercise this option to renew and continue this contract with the vendor listed below for twelve more months, please check the appropriate item and email this form back to me on or before November 20, 2025:

Systemates, Inc.

X Yes, I wish to continue the current contract with the above referenced vendors for the first renewal term of the contract.

Funds to support this contract will be provided by the following accounts:

10000-2026 GENERAL FUND/1B6010 0000 FACILITIES ADMIN/
578025 SOFTWARE MAINTENANCE & LICENCES

_____ No, I do not wish to continue the current contract with the above-mentioned vendors for the following reason(s).

SIGNATURE: Jon Hendrickson DATE: 11/5/2025

RFP No. F2024134 Annual Contract for Facilities Construction Projects Management Software

Post-Demonstration Scores

Award

		Systemates, Inc. Richardson, TX HUB-No	Woolpert, Inc. Dayton, OH HUB - No
Evaluation Criteria	Max Points	Score	Score
Qualifications and Experience	100	90	90
Response to Requirements	300	258	249
Project Approach and Implementation	100	84	86
References	150	100	125
Price	350	350	112
Total Score	1000	882	662

Notes: No-bids were received from GTS Technology Solutions, Inc., 3-C Technology, LLC, Salary.com, and Globe America Procurement and Consulting, Inc. After all proposals were evaluated, it was discovered that all vendors, except the two highest ranking vendors, did not meet one or more requirements. Some of the requirements include but are not limited to: allowance for administrative users the ability to grant access to users for specific projects only; audit trail feature to show all changes that were made for each project; and that Tarrant County data must remain in the forty-eight (48) contiguous United States. Therefore, those vendors were not considered to provide demonstrations.

TAKINGS IMPACT ASSESSMENT CHECKLIST

Complete this form for any county action that involves the adoption of a regulation, policy, guideline, court resolution, or order.

Project/Regulation Name: Bid No. F2024134 - Annual Contract for Facilities Construction Projects Management Software – Facilities Management– Systemates, Inc. - Exercise First Option for Renewal - Same Firm Fixed Prices

County Department: PURCHASING

Contact Person: Melissa Lee, C.P.M., A.P.P.

Phone Number for Contact Person: (817) 884-3245

Type of TIA Performed: (SHORT TIA) or FULL TIA. Circle one after answering the questions in Sections II and III below.

****

I. Stated Purpose

Attach to this checklist an explanation of the purpose of the regulation, policy, guideline, court resolution or order.

****

Note: The remainder of this Takings Impact Assessment Checklist should be completed in consultation with the Criminal District Attorney's Office.

II. Potential Effect on Private Real Property

1. Does the county action require a physical invasion, occupation or dedication of real property?

   Yes_____ No__√__

2. Does the county action limit or restrict a real property right, even partially or temporarily?

   Yes_____ No__√__

If you answered yes to either question, go to Section III. If you answered no to both, STOP HERE and circle SHORT TIA at the top of the form.

****

TARRANT COUNTY
COMMISSIONERS COURT COMMUNICATION

Court Date: December 9, 2025	**Court Order #:**	**Page:** 1 of 8
Department: Purchasing	**Prepared By:** Kehinde Olugbile	**Approved By:** Christopher Lax, CPSM, CPSD, CPCP

SUBJECT:

RFP No. F2025013 - Annual Contract for Drug and Alcohol Laboratory Testing Services - Community Supervision and Corrections Department - Various Vendors - Exercise First Option for Renewal - Same Contract Terms

***** CONSENT AGENDA *****

COMMISSIONERS COURT ACTION REQUESTED

It is requested that the Commissioners Court approve renewal of RFP No. F2025013, Annual Contract for Drug and Alcohol Laboratory Testing Services, for the first optional twelve (12) month period at the same contract terms.

BACKGROUND

On December 3, 2024, the Commissioners Court, through Court Order #144403, awarded RFP No. F2025013, Annual Contract for Drug and Alcohol Laboratory Testing Services, for Community Supervision and Corrections Department (CSCD), to the following vendors:

Primary	Technical Resource Management, LLC, d/b/a Cordant Health Solutions
Secondary	Avertest, LLC d/b/a Averhealth

The awards were based upon evaluation criteria set forth in the RFP specifications and contained options to renew for two (2) additional twelve (12) month periods.

The purpose of this contract is to provide drug and alcohol testing services to ensure compliance with court-mandated abstinence from drugs and alcohol, and for decision-making regarding their rehabilitation progress within the criminal justice system.

The vendors notified Purchasing in writing that they will extend the same contract terms through January 17, 2027. CSCD notified Purchasing in writing that they are pleased with the vendors and want to renew.

Therefore, it is the joint recommendation of the CSCD and Purchasing that the Commissioners Court approve renewal of RFP No. F2025013, Annual Contract for Drug and Alcohol Laboratory Testing Services, for another twelve (12) month period.

Subject to continued funding by the Commissioners Court, this agreement shall automatically renew January 18, 2027, hereafter for one (1) twelve (12) month period ending on January 17, 2028, unless sooner terminated by either party as provided herein.

FISCAL IMPACT

Expenses for last twelve (12) months were $1,763,150.36. Funding is available in account C0010-2026 CJAD-Basic Supervision (BS)/2510100000 CSCD/572222 Laboratory Costs/GCJAD-2004.

Attachments

F2025013 Backup.pdf

TARRANT COUNTY PURCHASING DEPARTMENT
100 E. Weatherford St. #303 • Fort Worth, TX 76196 • (817) 884-1414 • (817) 884-2629 (Fax)

Melissa Lee, C.P.M., A.P.P.
Purchasing Agent

Chris Lax, MS.SCM, CPSM, CPSD, CPCP
Assistant Purchasing Agent

November 11, 2025

Decia Stenzel
Technical Resource Management, LLC. d/b/a Cordant Health Solutions
5604 Fortune Circle South Drive, Suite N
Indianapolis, IN 46241

Re: RFP No. F2025013 – Annual Contract for Drug and Alcohol Laboratory Testing Services

Dear Decia:

Referenced bid was for twelve (12) months with two (2) options to renew for an additional twelve (12) months each. The original contract was for the period of January 18, 2025 through January 17, 2026. The effective dates for the first renewal option will run from January 18, 2026 through January 17, 2027.

Tarrant County Purchasing Department hereby extends an invitation to Technical Resource Management, LLC. d/b/a Cordant Health Solutions to accept the first option for an additional one (1) year period as the primary vendor for this bid as awarded on December 3, 2024. Technical Resource Management, LLC. d/b/a Cordant Health Solutions acknowledges formal renewal of the option and any contract is contingent upon review and approval by the Tarrant County Commissioners Court at a later date. Please mark the appropriate response below and provide your signature above your printed name. All prices must remain firm for the optional renewal period through January 17, 2027.

☒ Yes, Technical Resource Management, LLC. d/b/a Cordant Health Solutions will accept the offer to extend the same contract terms through January 17, 2027.
Please include a current 1295 Form with your response.

☐ No, Technical Resource Management, LLC. d/b/a Cordant Health Solutions will NOT accept the offer to extend the same contract terms through January 17, 2027.

Are any other governmental entities currently utilizing this contract? ☐ Yes ☒ No

If Yes, please return a listing of the participating entities with this letter.

Please email your signed response.

Sincerely,

Damio
Kehinde Olugbile, Senior Buyer
Tarrant County

Decia Stenzel,
Technical Resource Management, LLC.
d/b/a Cordant Health Solution

11/12/2025
Date

TARRANT COUNTY PURCHASING DEPARTMENT
100 E. Weatherford St. #303 • Fort Worth, TX 76196 • (817) 884-1414 • (817) 884-2629 (Fax)

Melissa Lee, C.P.M., A.P.P.
Purchasing Agent

Chris Lax, MS.SCM, CPSM, CPSD, CPCP
Assistant Purchasing Agent

November 11, 2025

Lauren Berens
Avertest, LLC d/b/a Averhealth
2400 Old Brick Rd
Glen Allen, VA 23060

Re: RFP No. F2025013 – Annual Contract for Drug and Alcohol Laboratory Testing Services

Dear Lauren:

Referenced bid was for twelve (12) months with two (2) options to renew for an additional twelve (12) months each. The original contract was for the period of January 18, 2025 through January 17, 2026. The effective dates for the first renewal option will run from January 18, 2026 through January 17, 2027.

Tarrant County Purchasing Department hereby extends an invitation to Avertest, LLC d/b/a Averhealth to accept the first option for an additional one (1) year period as the secondary vendor for this bid as awarded on December 3, 2024. Avertest, LLC d/b/a Averhealth acknowledges formal renewal of the option and any contract is contingent upon review and approval by the Tarrant County Commissioners Court at a later date. Please mark the appropriate response below and provide your signature above your printed name. All prices must remain firm for the optional renewal period through January 17, 2027.

☑ Yes, Avertest, LLC d/b/a Averhealth will accept the offer to extend the same contract terms through January 17, 2027.
Please include a current 1295 Form with your response.

☐ No, Avertest, LLC d/b/a Averhealth will NOT accept the offer to extend the same contract terms through January 17, 2027.

Are any other governmental entities currently utilizing this contract? ☐ Yes ☑ No

If Yes, please return a listing of the participating entities with this letter.

Please email your signed response.

Sincerely,

Damio
Kehinde Olugbile, Senior Buyer
Tarrant County

Dominique Hummel
Dominique Hummel
Avertest, LLC d/b/a Averhealth

11/5/25
Date

Memorandum

To: Elaine Johnson

Dept: Community Supervision and Corrections Department

From: Kehinde Olugbile, Sr. Buyer, Purchasing Department

Date: 10/30/2025

Re: Renewal of RFP No. F2025013 – Annual Contract for Drug and Alcohol Laboratory Testing Services

---

The above referenced contract will expire on January 17, 2026. This contract included two (2) options to renew with the vendor for additional twelve (12) month terms. The first renewal term would commence January 18, 2026 and would expire January 17, 2027.

If you wish to exercise this option to renew and continue this contract with the vendor listed below for twelve more months, please check the appropriate item and email this form back to me at kolugbile@tarrantcountytx.gov by November 6, 2025

Technical Resource Management, LLC, d/b/a Cordant Health Solutions
Avertest, LLC d/b/a Averhealth

X Yes, I wish to continue the current contract with the above mentioned vendor for the second and final renewal term of the contract.

Funds to support this contract will be provided by the following accounts:

C0010-2026 CJAD-Basic Supervision/2510100000 CSCD/572222 Laboratory Costs/GCJAD-2004

_____ No, I do not wish to continue the current contract with the above-mentioned vendor for the following reason(s).

_____

SIGNATURE: Elaine Johnson DATE: 11/03/2025

RFP No. F2025013 Annual Contract for Drug and Alcohol Laboratory Testing Services

Best and Final Offer Scores

		Primary	*Secondary*
		Technical Resource Management, LLC dba Cordant Health Solutions Indianapolis, IN HUB - No COOP - Yes	*Avertest, LLC dba Averhealth Glen Allen, VA HUB - No COOP - Yes*
Evaluation Criteria	Max Points	Score	Score
VENDOR Qualifications and Experience	200	**179.67**	*182.33*
Responsiveness to the RFP Requirements and Specifications	200	**168.00**	*165.67*
Proposed Approach and Management	200	**154.33**	*172.67*
References	50	**32.00**	*41.00*
Proposed Cost	350	**350.00**	*284.42*
Total Score	1000	**884.00**	*846.09*

Note: No-bids received from Awera Visuals LLC, Complete Supply Inc., DSI Medical Services Inc., Fisher Healthcare, Medco Supply Company, Mercedes Medical LLC dba Mercedes Scientific, OLIVARES ELECTRIC OF EL PASO, LLC, Reliable Dental Supply & Service Company, and Southwest Materials Handling Co.

METRO HEALTH STAFFING, LLC and TCF Lab Service LLC were deemed non-responsive for failure to provide all submittal requirements necessary for evaluation, including vendor qualifications and experience, responsiveness to the RFP requirements and specifications, and proposed approach and management.

RFP No. F2025013 Annual Contract for Drug and Alcohol Laboratory Testing Services

Initial Scores

		Accu Reference Medical Lab Linden, NJ HUB - No	Avertest, LLC dba Averhealth Glen Allen, VA HUB - No	Technical Resource Management, LLC dba Cordant Health Solutions Indianapolis, IN HUB - No	NOVA 1 LLC Melissa, TX HUB - No	Phamatech, Inc. San Diego, CA HUB - Yes
Evaluation Criteria	Max Points	Score	Score	Score	Score	Score
VENDOR Qualifications and Experience	200	121.00	182.33	179.67	92.00	170.67
Responsiveness to the RFP Requirements and Specifications	200	101.33	165.67	168.00	77.00	120.67
Proposed Approach and Management	200	97.67	172.67	154.33	90.67	107.67
References	50	36.00	41.00	32.00	0.00	30.00
Proposed Cost	350	126.11	294.13	350.00	33.07	218.03
Total Score	1000	482.11	855.80	884.00	292.74	647.04

Note: No-bids received from Awera Visuals LLC, Complete Supply Inc., DSI Medical Services Inc., Fisher Healthcare, Medco Supply Company, Mercedes Medical LLC dba Mercedes Scientific, OLIVARES ELECTRIC OF EL PASO, LLC, Reliable Dental Supply & Service Company, and Southwest Materials Handling Co.

METRO HEALTH STAFFING, LLC and TCF Lab Service LLC were deemed non-responsive for failure to provide all submittal requirements necessary for evaluation, including vendor qualifications and experience, responsiveness to the RFP requirements and specifications, and proposed approach and management.

TAKINGS IMPACT ASSESSMENT CHECKLIST

Complete this form for any county action that involves the adoption of a regulation, policy, guideline, court resolution, or order.

Project/Regulation Name: RFP No. F2025013 - Annual Contract for Drug and Alcohol Laboratory Testing Services - Community Supervision and Corrections Department - Various Vendors - Exercise First Option for Renewal - Same Contract Terms

County Department: PURCHASING

Contact Person: Melissa Lee, C.P.M., A.P.P.

Phone Number for Contact Person: (817) 884-3245

Type of TIA Performed: (SHORT TIA) or FULL TIA. Circle one after answering the questions in Sections II and III below.

****

I. Stated Purpose

Attach to this checklist an explanation of the purpose of the regulation, policy, guideline, court resolution or order.

****

Note: The remainder of this Takings Impact Assessment Checklist should be completed in consultation with the Criminal District Attorney's Office.

II. Potential Effect on Private Real Property

1. Does the county action require a physical invasion, occupation or dedication of real property?

   Yes_____ No __√__

2. Does the county action limit or restrict a real property right, even partially or temporarily?

   Yes_____ No __√__

If you answered yes to either question, go to Section III. If you answered no to both, STOP HERE and circle SHORT TIA at the top of the form.

****

TARRANT COUNTY
COMMISSIONERS COURT COMMUNICATION

Court Date: December 9, 2025	**Court Order #:**	**Page:** 1 of 10
Department: Purchasing	**Prepared By:** Amos Jones Jr.	**Approved By:** Christopher Lax, CPSM, CPSD, CPCP

SUBJECT:

Bid No. F2025028 - Annual Contract for Pre-Sort Bulk Mail Services - Countywide - TC Delivers, LLC - Exercise First Option for Renewal - Same Per Discount from Postage Rate

***** CONSENT AGENDA *****

COMMISSIONERS COURT ACTION REQUESTED

It is requested that the Commissioners Court approve renewal of Bid No. F2025028, Annual Contract for Pre-Sort Bulk Mail Services, for the first optional twelve (12) month period at the same per discount from postage rate.

BACKGROUND

On December 17, 2024, the Commissioners Court, through Court Order #144490, awarded Bid No. F2025028, Annual Contract for Pre-Sort Bulk Mail Services, Countywide, to TC Delivers, LLC.

The award was based upon low bid meeting specifications and contained options to renew for two (2) additional twelve (12) month periods.

The purpose of this agreement is to provide Tarrant County with discounts on its postage rates. Awarded vendor will pick up Tarrant County mail to add to other mail that awarded vendor is sending in order to access higher discounts with the United States Post Office.

The vendor notified Purchasing in writing that their prices will remain firm through December 31, 2026. Elections Administration, Housing, and Facilities Management notified Purchasing in writing that they are pleased with the vendor and want to renew.

Therefore, it is the joint recommendation of Elections Administration, Facilities Management, Housing, and Purchasing that the Commissioners Court approve renewal of Bid No. F2025028, Annual Contract for Pre-Sort Bulk Mail Services, for another twelve (12) month period.

Subject to continued funding by the Commissioners Court, this agreement shall automatically renew January 1, 2027, hereafter for one (1) twelve (12) month period ending on December 31, 2027, unless sooner terminated by either party as provided herein.

FISCAL IMPACT

The estimated cost for postage services for Tarrant County is $428,886.56. The estimated cost for Tarrant County after discount is $394,996.44. This is an estimated cost savings of $33,890.12 a year.

Fund	Cost Center	G/L Account	Discount Saved
10000-2026	1420000000	521115	$2,033.41
10000-2026	1860100000	521011	$28,806.60
Grant-2004	5590100000	521115	$3,050.11

Attachments

Court Attachments - 11-24-2025.pdf

TARRANT COUNTY PURCHASING DEPARTMENT
100 E. Weatherford St. #303 • Fort Worth, TX 76196 • (817) 884-1414 • (817) 884-2629 (Fax)

Melissa Lee, C.P.M., A.P.P.
Purchasing Agent

Chris Lax, CPSM, CPSD, CPCP
Assistant Purchasing Agent

October 17, 2025

TC Delivers
4030 La Reunion Suite 100
Dallas, Texas 75212
Work #817-560-10825
daniel.bolivar@tcdelivers.com

F2025028 Annual Contract for Pre-Sort Bulk Mail Services

Dear Mr. Bolivar:

Referenced bid was for twelve (12) months with one (2) option to renew for additional twelve (12) months. The original contract was for the period of January 2, 2025, through December 31, 2025. The effective dates for the first renewal option will run from January 2,2026, through December 31, 2026.

☒ Yes, TC Delivers will accept the offer to extend the same contract pricing and discounts through the renewal period. **Please include a current 1295 Form with your response.**

☐ No, TC Delivers will NOT accept the offer to extend the same contract pricing and discounts through the renewal period.

Are any other governmental entities currently utilizing this contract? ☐ Yes ☒ No
If yes, please return a listing of the participating entities with this letter.

Please fax or email your signed response.

Sincerely,

Amos Jones
Senior Buyer Tarrant County
(P) 817.212.6829
(F) 817.212.6829
(E) Adjones3@tarrantcountytx.gov

Name: MARK MAZURKIEWICZ
TC Delivers
(P) 945.468.6963
(F)
(E) MARK.MAZURKIEWICZ@TCDELIVERS.COM

Memorandum

To: **Troy Havard, Assistant Elections Administrator**

Dept.: Tarrant County Elections

From: Amos Jones, Senior Buyer, Purchasing Department

Date: November 21, 2025

Re: Renewal of F2025028 Annual Contract for Pre-sort Bulk Main Services

---

The above-mentioned contract will expire on December 31, 2025. This contract included options to renew with the vendor for two (2) additional twelve (12) month term. The first renewal term will commence January 1, 2026, and would expire December 31, 2026.

If you wish to exercise this option to renew and continue this contract with the vendor(s) listed below for twelve (12) more months, please check the appropriate boxes and email this form **back to me on or before Tuesday, October 14, 2025.**

VENDOR – TC Delivers - Dallas

☑ Yes, I wish to continue the current contract with the above-mentioned vendor(s) for the first and final renewal term of the contract. Account information must be provided below.

_____ / _____ / _____ / _____

521115 / 100000-2026 / 1420000000 / (Grant # or NRG)

☐ No, I do not wish to continue the current contract with the above-mentioned vendor(s) for the following reason(s).

_____

_____

SIGNATURE: _____ DATE: 11/21/2025

Memorandum

To: **Robert Carter**

Dept.: Tarrant County Facilities

From: Amos Jones, Senior Buyer, Purchasing Department

Date: November 21, 2025

Re: Renewal of F2025028 Annual Contract for Pre-sort Bulk Main Services

---

The above-mentioned contract will expire on December 31, 2025. This contract included options to renew with the vendor for two (2) additional twelve (12) month term. The first renewal term will commence January 1, 2026, and would expire December 31, 2026.

If you wish to exercise this option to renew and continue this contract with the vendor(s) listed below for twelve (12) more months, please check the appropriate boxes and email this form **back to me on or before Tuesday, October 14, 2025.**

VENDOR – TC Delivers - Dallas

☑ Yes, I wish to continue the current contract with the above-mentioned vendor(s) for the first and final renewal term of the contract. Account information must be provided below.

521011 / 10000 - 2024 / 18600 / 000001 _____

(GL acct) / (Fund #) / (Cost Center) / (Grant # or NRG)

☐ No, I do not wish to continue the current contract with the above-mentioned vendor(s) for the following reason(s).

SIGNATURE: Robert Carter DATE: 11/21/25

Memorandum

To: **Deliliah Crowe**

Dept.: Tarrant County Housing

From: Amos Jones, Senior Buyer, Purchasing Department

Date: November 21, 2025

Re: Renewal of F2025028 Annual Contract for Pre-sort Bulk Main Services

---

The above-mentioned contract will expire on December 31, 2025. This contract included options to renew with the vendor for two (2) additional twelve (12) month term. The first renewal term will commence January 1, 2026, and would expire December 31, 2026.

If you wish to exercise this option to renew and continue this contract with the vendor(s) listed below for twelve (12) more months, please check the appropriate boxes and email this form **back to me on or before Tuesday, October 14, 2025.**

VENDOR – TC Delivers - Dallas

X Yes, I wish to continue the current contract with the above-mentioned vendor(s) for the first and final renewal term of the contract. Account information must be provided below.

521115 / GRANT-2004 / 5590100000 / R0014-2024

(GL acct) / (Fund #) / (Cost Center) / (Grant # or NRG)

☐ No, I do not wish to continue the current contract with the above-mentioned vendor(s) for the following reason(s).

_____

_____

SIGNATURE: *Delilah Crowe* DATE: 10/15/2025

Bid No. F2025028 Annual Contract for Pre-Sort Bulk Services

				Award			
				TC Delivers, LLC Dallas, TX HUB - No			
Line #	Description	QTY	USPS Rate	USPS Rate Discount Percentage	USPS Rate Discount Amount	Handling Fee	Ext Cost or Savings
1	Discount offered to Tarrant County for current Postage Rate for Bulk Mail						
1.1	Letters Pre-Sort Rate1.0 oz. - 3.5 oz.	610000	$0.69	**7.90%**	**$ (0.0545)**	$ -	**$ (33,251.10)**
1.2	Flats Pre-Sort Rate1 oz.	2400	$1.50	**8.00%**	**$ (0.1200)**	$ -	**$ (288.00)**
1.3	Flats Pre-Sort Rate2 oz.	500	$1.77	**8.00%**	**$ (0.1416)**	$ -	**$ (70.80)**
1.4	Flats Pre-Sort Rate3 oz.	500	$2.04	**8.00%**	**$ (0.1632)**	$ -	**$ (81.60)**
1.5	Flats Pre-Sort Rate4 oz.	500	$2.31	**8.00%**	**$ (0.1848)**	$ -	**$ (92.40)**
1.6	Flats Pre-Sort Rate5 oz.	500	$2.59	**8.00%**	**$ (0.2072)**	$ -	**$ (103.60)**
1.7	Flats Pre-Sort Rate6 oz.	1	$2.87	**8.00%**	**$ (0.2296)**	$ -	**$ (0.23)**
1.8	Flats Pre-Sort Rate7 oz.	1	$3.15	**8.00%**	**$ (0.2520)**	$ -	**$ (0.25)**
1.9	Flats Pre-Sort Rate8 oz.	1	$3.43	**8.00%**	**$ (0.2744)**	$ -	**$ (0.27)**
1.10	Flats Pre-Sort Rate9 oz.	1	$3.71	**8.00%**	**$ (0.2968)**	$ -	**$ (0.30)**
1.11	Flats Pre-Sort Rate10 oz.	1	$4.01	**8.00%**	**$ (0.3208)**	$ -	**$ (0.32)**
1.12	Flats Pre-Sort Rate11 oz.	1	$4.31	**8.00%**	**$ (0.3448)**	$ -	**$ (0.34)**
1.13	Flats Pre-Sort Rate12 oz.	1	$4.61	**8.00%**	**$ (0.3688)**	$ -	**$ (0.37)**
1.14	Flats Pre-Sort Rate13 oz.	1	$4.91	**8.00%**	**$ (0.3928)**	$ -	**$ (0.39)**
1.15	Postcard Pre-Sort Rate	1	$0.56	**25.00%**	**$ (0.1400)**	$ -	**$ (0.14)**
2	Hourly Rate to Sort Mail Items	1	N/A	**N/A**	**N/A**	$ -	$ -
	Total Cost or Savings						**$ (33,890.12)**

Bid No. F2025028 Annual Contract for Pre-Sort Bulk Services

				A&C Pro Coppell, TX HUB - Yes			
Line #	Description	QTY	USPS Rate	USPS Rate Discount Percentage	USPS Rate Discount Amount	Handling Fee	Ext Cost or Savings
1	Discount offered to Tarrant County for current Postage Rate for Bulk Mail						
1.1	Letters Pre-Sort Rate1.0 oz. - 3.5 oz.	610000	$0.69	2.00%	$ (0.0138)	$ -	$ (8,418.00)
1.2	Flats Pre-Sort Rate1 oz.	2400	$1.50	2.00%	$ (0.0300)	$ 1.00	$ 2,328.00
1.3	Flats Pre-Sort Rate2 oz.	500	$1.77	2.00%	$ (0.0354)	$ 1.00	$ 482.30
1.4	Flats Pre-Sort Rate3 oz.	500	$2.04	3.00%	$ (0.0612)	$ 1.00	$ 469.40
1.5	Flats Pre-Sort Rate4 oz.	500	$2.31	3.00%	$ (0.0693)	$ 1.00	$ 465.35
1.6	Flats Pre-Sort Rate5 oz.	500	$2.59	3.00%	$ (0.0777)	$ 1.00	$ 461.15
1.7	Flats Pre-Sort Rate6 oz.	1	$2.87	3.20%	$ (0.0918)	$ 1.00	$ 0.91
1.8	Flats Pre-Sort Rate7 oz.	1	$3.15	3.50%	$ (0.1103)	$ 1.00	$ 0.89
1.9	Flats Pre-Sort Rate8 oz.	1	$3.43	4.50%	$ (0.1544)	$ 1.00	$ 0.85
1.10	Flats Pre-Sort Rate9 oz.	1	$3.71	4.50%	$ (0.1670)	$ 1.00	$ 0.83
1.11	Flats Pre-Sort Rate10 oz.	1	$4.01	5.20%	$ (0.2085)	$ 1.00	$ 0.79
1.12	Flats Pre-Sort Rate11 oz.	1	$4.31	5.50%	$ (0.2371)	$ 2.00	$ 1.76
1.13	Flats Pre-Sort Rate12 oz.	1	$4.61	5.70%	$ (0.2628)	$ 2.00	$ 1.74
1.14	Flats Pre-Sort Rate13 oz.	1	$4.91	6.20%	$ (0.3044)	$ 2.00	$ 1.70
1.15	Postcard Pre-Sort Rate	1	$0.56	1.50%	$ (0.0084)	$ -	$ (0.01)
2	Hourly Rate to Sort Mail Items	1	N/A	N/A	N/A	$ 2.00	$ 2.00
	Total Cost or Savings						$ (4,200.34)

Bid No. F2025028 Annual Contract for Pre-Sort Bulk Services

				Pitney Bowes Shelton, CT HUB - No			
Line #	Description	QTY	USPS Rate	USPS Rate Discount Percentage	USPS Rate Discount Amount	Handling Fee	Ext Cost or Savings
1	Discount offered to Tarrant County for current Postage Rate for Bulk Mail						
1.1	Letters Pre-Sort Rate1.0 oz. - 3.5 oz.	610000	$0.69	0.10%	$ (0.0007)	$ -	$ (420.90)
1.2	Flats Pre-Sort Rate1 oz.	2400	$1.50	0.42%	$ (0.0063)	$ 0.59	$ 1,400.88
1.3	Flats Pre-Sort Rate2 oz.	500	$1.77	0.35%	$ (0.0062)	$ 0.59	$ 291.90
1.4	Flats Pre-Sort Rate3 oz.	500	$2.04	0.31%	$ (0.0063)	$ 0.59	$ 291.84
1.5	Flats Pre-Sort Rate4 oz.	500	$2.31	0.27%	$ (0.0062)	$ 0.59	$ 291.88
1.6	Flats Pre-Sort Rate5 oz.	500	$2.59	0.13%	$ (0.0034)	$ 0.59	$ 293.32
1.7	Flats Pre-Sort Rate6 oz.	1	$2.87	0.12%	$ (0.0034)	$ 0.59	$ 0.59
1.8	Flats Pre-Sort Rate7 oz.	1	$3.15	0.20%	$ (0.0063)	$ 0.59	$ 0.58
1.9	Flats Pre-Sort Rate8 oz.	1	$3.43	0.18%	$ (0.0062)	$ 0.59	$ 0.58
1.10	Flats Pre-Sort Rate9 oz.	1	$3.71	0.17%	$ (0.0063)	$ 0.59	$ 0.58
1.11	Flats Pre-Sort Rate10 oz.	1	$4.01	0.16%	$ (0.0064)	$ 0.59	$ 0.58
1.12	Flats Pre-Sort Rate11 oz.	1	$4.31	0.15%	$ (0.0065)	$ 0.59	$ 0.58
1.13	Flats Pre-Sort Rate12 oz.	1	$4.61	0.14%	$ (0.0065)	$ 0.59	$ 0.58
1.14	Flats Pre-Sort Rate13 oz.	1	$4.91	0.13%	$ (0.0064)	$ 0.59	$ 0.58
1.15	Postcard Pre-Sort Rate	1	$0.56	NOT OFFERED			
2	Hourly Rate to Sort Mail Items	1	N/A	Call for Quote			
	Total Cost or Savings						$ 2,153.59

Bid No. F2025028 Annual Contract for Pre-Sort Bulk Services

				Adams Consulting Tower LLC Fort Worth, TX HUB - Yes			
Line #	Description	QTY	USPS Rate	USPS Rate Discount Percentage	USPS Rate Discount Amount	Handling Fee	Ext Cost or Savings
1	Discount offered to Tarrant County for current Postage Rate for Bulk Mail						
1.1	Letters Pre-Sort Rate1.0 oz. - 3.5 oz.	610000	$0.69	1.00%	$ (0.0069)	$ -	$ (4,209.00)
1.2	Flats Pre-Sort Rate1 oz.	2400	$1.50	1.00%	$ (0.0150)	$ 4.99	$ 11,940.00
1.3	Flats Pre-Sort Rate2 oz.	500	$1.77	1.00%	$ (0.0177)	$ 3.28	$ 1,631.15
1.4	Flats Pre-Sort Rate3 oz.	500	$2.04	1.00%	$ (0.0204)	$ 3.28	$ 1,629.80
1.5	Flats Pre-Sort Rate4 oz.	500	$2.31	1.00%	$ (0.0231)	$ 6.11	$ 3,043.45
1.6	Flats Pre-Sort Rate5 oz.	500	$2.59	1.00%	$ (0.0259)	$ 6.11	$ 3,042.05
1.7	Flats Pre-Sort Rate6 oz.	1	$2.87	1.00%	$ (0.0287)	$ 7.00	$ 6.97
1.8	Flats Pre-Sort Rate7 oz.	1	$3.15	1.00%	$ (0.0315)	$ 7.00	$ 6.97
1.9	Flats Pre-Sort Rate8 oz.	1	$3.43	1.00%	$ (0.0343)	$ 7.50	$ 7.47
1.10	Flats Pre-Sort Rate9 oz.	1	$3.71	1.00%	$ (0.0371)	$ 7.80	$ 7.76
1.11	Flats Pre-Sort Rate10 oz.	1	$4.01	1.00%	$ (0.0401)	$ 8.10	$ 8.06
1.12	Flats Pre-Sort Rate11 oz.	1	$4.31	1.00%	$ (0.0431)	$ 8.27	$ 8.23
1.13	Flats Pre-Sort Rate12 oz.	1	$4.61	1.00%	$ (0.0461)	$ 8.55	$ 8.50
1.14	Flats Pre-Sort Rate13 oz.	1	$4.91	11.00%	$ (0.5401)	$ 8.82	$ 8.28
1.15	Postcard Pre-Sort Rate	1	$0.56	1.00%	$ (0.0056)	$ -	$ 0.01
2	Hourly Rate to Sort Mail Items	1	N/A	N/A	N/A	$ 25.00	$ 25.00
	Total Cost or Savings						$ 17,164.69

Notes: No-bid responses received frm: American Solutions for Business, RAM Products, LTD, Southwest Materials Handling Co, ODP Business Solutions, Cape Equipment & Services LLC, ACCO Brands USA LLC, Olivares Electric of El Paso, LLC., CompletelySupply Inc. and Storage Equipment

TAKINGS IMPACT ASSESSMENT CHECKLIST

Complete this form for any county action that involves the adoption of a regulation, policy, guideline, court resolution, or order.

Project/Regulation Name: Bid No. F2025025 – Annual Contract for Pre-Sort Bulk Mail Services – Countywide – TC Delivers, LLC – Exercise First Option for Renewal - Per Discount from Postage Rate

County Department: PURCHASING

Contact Person: Melissa Lee, C.P.M., A.P.P.

Phone Number for Contact Person: (817) 884-3245

Type of TIA Performed: (SHORT TIA) or FULL TIA. Circle one after answering the questions in Sections II and III below.

****

I. Stated Purpose

Attach to this checklist an explanation of the purpose of the regulation, policy, guideline, court resolution or order.

****

Note: The remainder of this Takings Impact Assessment Checklist should be completed in consultation with the Criminal District Attorney's Office.

II. Potential Effect on Private Real Property

1. Does the county action require a physical invasion, occupation or dedication of real property?

   Yes_____ No __√__

2. Does the county action limit or restrict a real property right, even partially or temporarily?

   Yes_____ No __√__

If you answered yes to either question, go to Section III. If you answered no to both, STOP HERE and circle SHORT TIA at the top of the form.

****

TARRANT COUNTY
COMMISSIONERS COURT COMMUNICATION

Court Date: December 9, 2025	**Court Order #:**	**Page:** 1 of 5
Department: Purchasing	**Prepared By:** Stefani Felipe	**Approved By:** Christopher Lax, CPSM, CPSD, CPCP

SUBJECT:

Bid No. F2025029 - Annual Contract for Copy Paper - Countywide - Various Vendors - Exercise First and Final Option for Renewal - Same Firm Fixed Prices

***** CONSENT AGENDA *****

COMMISSIONERS COURT ACTION REQUESTED

It is requested that the Commissioners Court approve renewal of Bid No. F2025029, Annual Contract for Copy Paper, for the first and final optional twelve (12) month period at the same firm fixed prices to the following vendors:

Primary	Western-BRW Paper Co.
Secondary	FasClampitt Paper Store

BACKGROUND

On December 17, 2024, the Commissioners Court, through Court Order #144491, awarded Bid No. F2025029, Annual Contract for Copy Paper, Countywide, to the following vendors:

Primary	A6 Scientific Corp.
Secondary	Western-BRW Paper Co.
Alternate	FasClampitt Paper Store

The awards were based upon low bid meeting specifications and contained an option to renew for one (1) additional twelve (12) month period.

The purpose of this contract is to purchase copy paper to all county departments.

On July 1, 2025, the Commissioner's Court, through Court Order #145493, cancelled the award to A6 Scientific Corp. The remaining vendors notified Purchasing in writing that their prices will remain firm through February 2, 2027.

Therefore, it is the recommendation of Purchasing that the Commissioners Court approve renewal of Bid No. F2025029, Annual Contract for Copy Paper, for another twelve (12) month period.

FISCAL IMPACT

Expenses for the last twelve (12) months were $110,000.00. Funding is available in account 10000-2026 General Fund/Various Cost Centers/521011 Supplies.

Attachments

F2025029 Binder.pdf

TARRANT COUNTY PURCHASING DEPARTMENT
100 E. Weatherford St. #303 • Fort Worth, TX 76196 • (817) 884-1414 • (817) 884-2629 (Fax)

Melissa Lee, C.P.M., A.P.P.
Purchasing Agent

Chris Lax, MS.SCM, CPSM, CPSD, CPCP
Assistant Purchasing Agent

November 5, 2025

Bo Hyman
Western-BRW Paper Co.
1810 Kelly Blvd Ste 1800
Carrollton, TX 75006

Re: RFP No. F2025029 – Annual Contract for Copy Paper

Dear Mr. Hyman :

Referenced bid was for twelve (12) months with one (1) option to renew for an additional twelve (12) months. The original contract was for the period of February 2, 2025, through February 1, 2026. The effective dates for the first renewal option will run from February 2, 2026, through February 1, 2027.

☒ Yes, Western-BRW Paper Co will accept the offer to extend the same firm fixed prices through February 1, 2027, **Please include a current 1295 Form with your response.**

☐ No, Western-BRW Paper Co will NOT accept the offer to extend the same firm fixed prices through February 1, 2027.

Are any other governmental entities currently utilizing this contract? ☐ Yes ☒ No

If Yes, please return a listing of the participating entities with this letter.

Please email or fax your signed response.

Sincerely,

Stefani Felipe, Buyer
Tarrant County
817-212-7250

Bo Hyman, Western-BRW Paper Co
Kevin Jerger

11-10-25
Date

TARRANT COUNTY PURCHASING DEPARTMENT
100 E. Weatherford St. #303 • Fort Worth, TX 76196 • (817) 884-1414 • (817) 884-2629 (Fax)

Melissa Lee, C.P.M., A.P.P.
Purchasing Agent

Chris Lax, MS.SCM, CPSM, CPSD, CPCP
Assistant Purchasing Agent

November 5, 2025

Eddie Nolen
FasClampitt Paper Store.
7500 Baker Blvd
Fort Worth, TX 76118

Re: RFP No. F2025029 – Annual Contract for Copy Paper

Dear Mr. Nolen :

Referenced bid was for twelve (12) months with one (1) option to renew for an additional twelve (12) months. The original contract was for the period of February 2, 2025, through February 1, 2026. The effective dates for the first renewal option will run from February 2, 2026, through February 1, 2027.

☑ Yes, FasClampitt Paper Store.will accept the offer to extend the same firm fixed prices through February 1, 2027, **Please include a current 1295 Form with your response.**

☐ No, FasClampitt Paper Store.will NOT accept the offer to extend the same firm fixed prices through February 1, 2027.

Are any other governmental entities currently utilizing this contract? ☐ Yes ☑ No

If Yes, please return a listing of the participating entities with this letter.

Please email or fax your signed response.

Sincerely,

Stefani Felipe, Buyer
Tarrant County
817-212-7250

Eddie Nolen
Eddie Nolen, FasClampitt Paper Store.

11-18-2025
Date

Bid No. F2025029 Annual Contract for Copy Paper

			Primary Award		Secondary Award		Alternate Award			
			A6 Scientific Corp. Houston, TX HUB - Yes CO-OP - Yes		Western-BRW Paper Co. Carrollton, TX HUB - No CO-OP - Yes		FasClampitt Paper Store Fort Worth, TX HUB - NO CO-OP - Yes		Staples Contract & Commercial LLC Framingham, MA	
Item	QTY	UOM	**Unit**	**Extended**	Unit	Extended	Unit	Extended	Unit	Extended
20 lb., Bond Paper 8 1/2" x 11	4000	Per Case	**$34.00**	**$136,000.00**	$35.40	$141,600.00	$36.80	$147,200.00	$36.99	$147,960.00
20 lb., Bond Paper 8 1/2" x 14	50	Per Case	**$64.00**	**$3,200.00**	$50.00	$2,500.00	$53.00	$2,650.00	$53.23	$2,661.50
Total			**$139,200.00**		$144,100.00		$149,850.00		$150,621.50	

			Business Essentials Grapevine, TX		White Horse Distribution, LLC Grand Prairie, TX		Agni Enterprises LLC Miami, FL		Prestige Auto Group LLC Fort Worth, TX	
Item	QTY	UOM	Unit	Extended	Unit	Extended	Unit	Extended	Unit	Extended
20 lb., Bond Paper 8 1/2" x 11	4000	Per Case	$37.99	$151,960.00	$75.00	$300,000.00	$103.96	$415,840.00	$275.00	$1,100,000.00
20 lb., Bond Paper 8 1/2" x 14	50	Per Case	$57.99	$2,899.50	$95.00	$4,750.00	$136.55	$6,827.50	$345.00	$17,250.00
Total			$154,859.50		$304,750.00		$422,667.50		$1,117,250.00	

No-bids were received from American Solutions for Business, Southwest Materials Handling Co., 3-C Technology, LLC, ODP Business Solutions, ACCO Brands USA, and Complete Supply Inc.

TAKINGS IMPACT ASSESSMENT CHECKLIST

Complete this form for any county action that involves the adoption of a regulation, policy, guideline, court resolution, or order.

Project/Regulation Name: Bid No. F2025029 - Annual Contract for Copy Paper - Countywide - Various Vendors - Exercise First and Final Option for Renewal - Same Firm Fixed Prices

County Department: PURCHASING
Contact Person: Melissa Lee, C.P.M., A.P.P.
Phone Number for Contact Person: (817) 884-3245

Type of TIA Performed: (SHORT TIA) or FULL TIA. Circle one after answering the questions in Sections II and III below.

****

I.Stated Purpose

Attach to this checklist an explanation of the purpose of the regulation, policy, guideline, court resolution or order.

****

Note: The remainder of this Takings Impact Assessment Checklist should be completed in consultation with the Criminal District Attorney's Office.

II. Potential Effect on Private Real Property

1. Does the county action require a physical invasion, occupation or dedication of real property?

   Yes_____ No __√__

2. Does the county action limit or restrict a real property right, even partially or temporarily?

   Yes_____ No __√__

   If you answered yes to either question, go to Section III. If you answered no to both, STOP HERE and circle SHORT TIA at the top of the form.

****

TARRANT COUNTY
COMMISSIONERS COURT COMMUNICATION

Court Date: December 9, 2025	**Court Order #:**	**Page:** 1 of 5
Department: Purchasing	**Prepared By:** Julie Nichols	**Approved By:** Christopher Lax, CPSM, CPSD, CPCP

SUBJECT:

Bid No. F2025042 - Annual Contract for Bobtail Truck Rentals - Elections Administration - Enterprise Holdings - Exercise First Option for Renewal - Same Firm Fixed Prices

***** CONSENT AGENDA *****

COMMISSIONERS COURT ACTION REQUESTED

It is requested that the Commissioners Court approve renewal of Bid No. F2025042, Annual Contract for Bobtail Truck Rentals, for the first optional twelve (12) month period at the same firm fixed prices.

BACKGROUND

On April 15, 2025, the Commissioners Court, through Court Order #145072, awarded Bid No. F2025042, Annual Contract for Bobtail Truck Rentals, for Elections Administration, to Enterprise Holdings.

The award was based upon low bid meeting specifications and contained options to renew for two (2) additional twelve (12) month periods.

The purpose of this agreement is to rent bobtail trucks on an as-needed basis throughout the year. Pricing includes collision damage waiver and business travelers liability insurance. Bobtail truck rentals are driven by full-time and temporary Elections Administration staff to deliver and retrieve equipment containers. Election equipment containers hold voting equipment, ePollbooks, voting booths, and supplies needed for early or election day in person voting. The bobtail trucks are used to visit the post office and election sites within Tarrant County.

Enterprise Holdings notified Purchasing in writing that their prices will remain firm through September 3, 2027. Elections Administration notified Purchasing in writing that they are pleased with the vendor and wants to renew.

Therefore, it is the joint recommendation of Elections Administration and Purchasing that the Commissioners Court approve renewal of Bid No. F2025042, Annual Contract for Bobtail Truck Rentals, for another twelve (12) month period.

Subject to continued funding by the Commissioners Court, this agreement shall automatically renew September 4, 2027, hereafter for one (1) twelve (12) month period ending on September 3, 2028, unless sooner terminated by either party as provided herein.

FISCAL IMPACT

Expenses for the last twelve (12) months were $125,738.90. Funding is available in account 10000-2026 General Fund/1420000000 Elections/576141 Voting Machine Transportation.

Attachments

F2025042-Backup.pdf

TARRANT COUNTY PURCHASING DEPARTMENT
100 E. Weatherford St. #303 • Fort Worth, TX 76196 • (817) 884-1414 • (817) 884-2629 (Fax)

Melissa Lee, C.P.M., A.P.P.
Purchasing Agent

Chris Lax, CPSM, CPSD, CPCP
Assistant Purchasing Agent

October 20, 2025

Enterprise Holdings
Address: 4201 North Highway 161, STE 150
Irving, TX 75038
Phone: (972) 536-4101
Contact: Jamie Tex
Email: james.b.tex@em.com
Vendor # 7009560

Re: BID NO. F2025042 Annual Contract for Bobtail Truck Rentals

Dear Jamie Tex:

Referenced bid was for twelve (12) months with two (2) options to renew for additional twelve (12) months each. The original contract was for the period of September 4, 2025 through September 3, 2026. The effective dates for the first renewal option will run September 4, 2026 through September 3, 2027.

☑ Yes, Enterprise Holdings will accept the offer to extend the same firm per unit pricing through the renewal period.
Please include a current 1295 Form with your response.

☐ No, Enterprise Holdings will NOT accept the offer to extend the same firm per unit pricing through the renewal period.

Are any other governmental entities currently utilizing this contract? ☐ Yes ☑ No
If yes, please return a listing of the participating entities with this letter.

Please fax or e-mail your signed response.

Sincerely,

Julie Nichols

Julie Nichols, Senior Buyer
(P) 817.884.1133
(F) 817.884.1133
(E) jmnichols@tarrantcountytx.gov

Name: _____
Jodiann Harley-Robinson
Phone number: 954-663-0018
E-mail: jodiannm.harleyrobinson@em.com
Date: 10/21/25

Memorandum

To: Troy Havard
Dept.: Elections
From: Julie Nichols, Senior Buyer, Purchasing Department
Date: October 20, 2025
Re: F2025042 Annual Contract for Bobtail Truck Rentals

The above referenced contract will expire on 9/3/2026. This contract included options to renew with the vendor for two (2) additional twelve (12) month terms. The original contract was for the period of September 4, 2025 through September 3, 2026. The effective dates for the first renewal option will take place from September 4, 2026 through September 3, 2027.

If you wish to exercise this option to renew and continue this contract with the vendor(s) listed below for twelve (12) more months, please check the appropriate boxes and email this form **back to me on or before Friday, October 24, 2025.**

Primary Enterprise Holdings

☒ Yes, I wish to continue the current contract with the above mentioned vendor(s) for the first renewal term of the contract. Account information must be provided below.

_576141__ / _576141-2026_ / _1420000000 / _(Grant # or NRG)_

☐ No, I do not wish to continue the current contract with the above mentioned vendor(s) for the following reason(s).

_____

_____

SIGNATURE: _____ DATE: 10/20/2025

BID No. F2025042 Annual Contract for Bobtail Truck Rentals

				Bruckner's Truck & Equipment Fort Worth, TX HUB - No		**Award** **Enterprise Holdings** **Irving, TX** **HUB - No** **CO-OP - Yes**	
				Total Price	$20,318.50	**Total Price**	**$32,603.00**
Line #	Description	QTY	UOM	Per Unit Rate	Total Rate	**Per Unit Rate**	**Total Rate**
1	Daily Rate for a 16 Foot Bobtail truck with a lift gate	52	Daily Rate	$85.50	$4,446.00	**$123.00**	**$6,396.00**
2	Weekly Rate for a 16 Foot Bobtail truck with a lift gate	13	Weekly Rate	$427.50	$5,557.50	**$738.00**	**$9,594.00**
3	Monthly Rate for a 16 Foot Bobtail truck with a lift gate	4	Monthly Rate	$1,852.50	$7,410.00	**$2,952.00**	**$11,808.00**
4	Daily Rate for a 26 Foot Bobtail truck with a lift gate	1	Daily Rate	$105.00	$105.00	**$155.00**	**$155.00**
5	Weekly Rate for a 26 Foot Bobtail truck with a lift gate	1	Weekly Rate	$525.00	$525.00	**$930.00**	**$930.00**
6	Monthly Rate for a 26 Foot Bobtail truck with a lift gate	1	Monthly Rate	$2,275.00	$2,275.00	**$3,720.00**	**$3,720.00**

No bids were received from Treads Tire and Wheel LLC, ODP Business Solutions, and Denny's Towing (D Towing LLC).

Bid received from Bruckner's Truck & Equipment was deemed non-responsive as they did not meet specifications for providing pricing that included collision damage waiver insurance and business traveler's liability insurance.

TAKINGS IMPACT ASSESSMENT CHECKLIST

Complete this form for any county action that involves the adoption of a regulation, policy, guideline, court resolution, or order.

Project/Regulation Name: Bid No. F2025042 - Annual Contract for Bobtail Truck Rentals - Elections Administration - Enterprise Holdings – Exercise First Option for Renewal – Same Firm Fixed Prices

County Department: PURCHASING

Contact Person: Melissa Lee, C.P.M., A.P.P.

Phone Number for Contact Person: (817) 884-3245

Type of TIA Performed: (SHORT TIA) or FULL TIA. Circle one after answering the questions in Sections II and III below.

****

I. Stated Purpose

Attach to this checklist an explanation of the purpose of the regulation, policy, guideline, court resolution or order.

****

Note: The remainder of this Takings Impact Assessment Checklist should be completed in consultation with the Criminal District Attorney's Office.

II. Potential Effect on Private Real Property

1. Does the county action require a physical invasion, occupation or dedication of real property?

   Yes_____ No__√__

2. Does the county action limit or restrict a real property right, even partially or temporarily?

   Yes_____ No__√__

If you answered yes to either question, go to Section III. If you answered no to both, STOP HERE and circle SHORT TIA at the top of the form.

****

TARRANT COUNTY
COMMISSIONERS COURT COMMUNICATION

Court Date: December 9, 2025	**Court Order #:**	**Page:** 1 of 8
Department: Purchasing	**Prepared By:** Julie Nichols	**Approved By:** Christopher Lax, CPSM, CPSD, CPCP

SUBJECT:

Bid No. F2025043 - Annual Contract for Short-Term Rentals of Cars, Trucks, and Vans - Elections Administration - Various Vendors - Exercise First Option for Renewal - Same Firm Fixed Prices

***** CONSENT AGENDA *****

COMMISSIONERS COURT ACTION REQUESTED

It is requested that the Commissioners Court approve renewal of Bid No. F2025043, Annual Contract for Short-Term Rentals of Cars, Trucks, and Vans, for the first optional twelve (12) month period at the same firm fixed prices.

BACKGROUND

On April 15, 2025, the Commissioners Court, through Court Order #145073, awarded Bid No. F2025043, Annual Contract for Short-Term Rentals of Cars, Trucks, and Vans, for Elections Administration, to the following vendors:

Primary	Enterprise Holdings
Secondary	Phoenix Contracting

The awards were based upon low bid meeting specifications and contained options to renew for two (2) additional twelve (12) month periods.

The purpose of this agreement is to rent passenger cars, pick-up trucks, and vans on an as-needed basis throughout the year. Pricing includes collision damage waiver and business traveler's liability insurance. Short term vehicle rentals are driven by full-time and temporary Elections Administration staff to provide supplies and service voting locations. The rental vehicles will be used to visit the post office and election sites within Tarrant County.

The vendors notified Purchasing in writing that their prices will remain firm through September 26, 2027. Elections Administration notified Purchasing in writing that they are pleased with the vendors and want to renew.

Therefore, it is the joint recommendation of Elections Administration and Purchasing that the Commissioners Court approve renewal of Bid No. F2025043, Annual Contract for Short-Term Rentals of Cars, Trucks, and Vans, for another twelve (12) month period.

Subject to continued funding by the Commissioners Court, this agreement shall automatically renew September 27, 2027, hereafter for one (1) twelve (12) month period ending on September 26, 2028, unless sooner terminated by either party as provided herein.

FISCAL IMPACT

Expenses for the last twelve (12) months were $104,732.18. Funding is available in account: T7100-2026 Contract Elections/1420000000 Elections/576141 Voting Machine Transportation.

Attachments

F2025043-Backup.pdf

TARRANT COUNTY PURCHASING DEPARTMENT
100 E. Weatherford St. #303 • Fort Worth, TX 76196 • (817) 884-1414 • (817) 884-2629 (Fax)

Melissa Lee, C.P.M., A.P.P.
Purchasing Agent

Chris Lax, CPSM, CPSD, CPCP
Assistant Purchasing Agent

October 21, 2025

Enterprise Holdings
Address: 4201 North Highway 161, STE 150
Irving, TX 75038
Phone: (972) 536-4101
Contact: Jamie Tex
Email: james.b.tex@em.com
Vendor # 7009560

Re: BID NO. F2025043 Annual Contract for Short-Term Rentals of Cars, Trucks, and Vans

Dear Jamie Tex:

Referenced bid was for twelve (12) months with two (2) options to renew for additional twelve (12) months each. The original contract was for the period of September 27, 2025 through September 26, 2026. The effective dates for the first renewal option will run September 27, 2026 through September 26, 2027.

☑ Yes, Enterprise Holdings will accept the offer to extend the same firm per unit pricing through the renewal period.
Please include a current 1295 Form with your response.

☐ No, Enterprise Holdings will NOT accept the offer to extend the same firm per unit pricing through the renewal period.

Are any other governmental entities currently utilizing this contract? ☐ Yes ☑ No
If yes, please return a listing of the participating entities with this letter.

Please fax or e-mail your signed response.

Sincerely,

Julie Nichols

Julie Nichols, Senior Buyer
(P) 817.884.1133
(F) 817.884.1133
(E) jmnichols@tarrantcountytx.gov

Name: _____
Jodiann Harley-Robinson
Phone number: 954-463-0018
E-mail: jodiann.m.harleyrobinson@em.c
Date: 10/21/25

TARRANT COUNTY PURCHASING DEPARTMENT
100 E. Weatherford St. #303 • Fort Worth, TX 76196 • (817) 884-1414 • (817) 884-2629 (Fax)

Melissa Lee, C.P.M., A.P.P.
Purchasing Agent

Chris Lax, CPSM, CPSD, CPCP
Assistant Purchasing Agent

October 20, 2025

Phoenix Contracting
Address: 9915 Smarty Jones Dr
Ruskin, FL 33573
Phone: (651) 321-3701
Contact: Kevin Stowe
Email: kevin@phxcontracting.com
Vendor # 7016623

Re: BID NO. F2025043 Annual Contract for Short-Term Rentals of Cars, Trucks, and Vans

Dear Kevin Stowe:

Referenced bid was for twelve (12) months with two (2) options to renew for additional twelve (12) months each. The original contract was for the period of September 27, 2025 through September 26, 2026. The effective dates for the first renewal option will run September 27, 2026 through September 26, 2027.

☒ Yes, Phoenix Contracting will accept the offer to extend the same firm per unit pricing through the renewal period.
Please include a current 1295 Form with your response.

☐ No, Phoenix Contracting will NOT accept the offer to extend the same firm per unit pricing through the renewal period.

Are any other governmental entities currently utilizing this contract? ☐ Yes ☒ No
If yes, please return a listing of the participating entities with this letter.

Please fax or e-mail your signed response.

Sincerely,

Julie Nichols

Julie Nichols, Senior Buyer
(P) 817.884.1133
(F) 817.884.1133
(E) jmnichols@tarrantcountytx.gov

Name: _____
Kevin Stowe
Phone number: 813-293-3069
E-mail: Kevin@phxcontracting.com
Date: 10/20/2025

Memorandum

To: Troy Havard
Dept.: Elections
From: Julie Nichols, Senior Buyer, Purchasing Department
Date: October 20, 2025
Re: F2025043 Annual Contract for Short-Term Rentals of Cars, Trucks, and Vans

---

The above referenced contract will expire on 9/26/2026. This contract included options to renew with the vendor for two (2) additional twelve (12) month terms. The original contract was for the period of September 27, 2025 through September 26, 2026. The effective dates for the first renewal option will take place from September 27, 2026 through September 26, 2027.

If you wish to exercise this option to renew and continue this contract with the vendor(s) listed below for twelve (12) more months, please check the appropriate boxes and email this form **back to me on or before Friday, October 24, 2025.**

Primary Enterprise Holdings
Secondary Phoenix Contracting

☒ Yes, I wish to continue the current contract with the above mentioned vendor(s) for the first renewal term of the contract. Account information must be provided below.

_576141___ / 576141-2026 / 1420000000 / (Grant # or NRG) _

☐ No, I do not wish to continue the current contract with the above mentioned vendor(s) for the following reason(s).

_____

_____

SIGNATURE: _____ DATE: 10/20/2025

Bid No. F2025043 Annual Contract for Short-Term Rentals of Cars, Trucks, and Vans

				Enterprise Holdings Irving, TX HUB - No CO-OP - Yes		Phoenix Contracting Ruskin, FL HUB - No CO-OP - Yes	
				Total Price	**$223,041.00**	Total Price	$878,625.00
Line #	Description	QTY	UOM	**Per Unit Rate**	**Total Rate**	Per Unit Rate	Total Rate
				Primary Award		Secondary Award	
1	Daily Rate for a high roof Cargo Van	1	Price Per Day	**$66.00**	**$66.00**	$650.00	$650.00
2	Weekly Rate for a high roof Cargo VanWeekly rate is seven (7) days.	1	Price Per Week	**$396.00**	**$396.00**	$3,850.00	$3,850.00
3	Monthly Rate for a high roof Cargo VanMonthly rate is thirty (30) days.	1	Price Per Month	**$1,584.00**	**$1,584.00**	$15,000.00	$15,000.00
4	Daily Rate for a 4-door Standard sedan	1	Price Per Day	**$47.00**	**$47.00**	$200.00	$200.00
5	Weekly Rate for a 4-door Standard sedan.Weekly rate is seven (7) days.	1	Price Per Week	**$282.00**	**$282.00**	$1,295.00	$1,295.00
6	Monthly Rate for a 4-door Standard sedan.Monthly rate is thirty (30) days.	2	Price Per Month	**$1,128.00**	**$2,256.00**	$5,850.00	$11,700.00
7	Daily Rate for a Full Size pick-up truck	1	Price Per Day	**$58.00**	**$58.00**	$350.00	$350.00
8	Weekly Rate for a Full Size pick-up truckWeekly rate is seven (7) days.	1	Price Per Week	**$350.00**	**$350.00**	$2,310.00	$2,310.00
9	Monthly Rate for a Full Size pick-up truckMonthly rate is thirty (30) days.	24	Price Per Month	**$1,400.00**	**$33,600.00**	$10,500.00	$252,000.00
10	Daily Rate for a Heavy Duty pick-up truck	1	Price Per Day	**$67.00**	**$67.00**	$375.00	$375.00
11	Weekly Rate for a Heavy Duty pick-up truckWeekly rate is seven (7) days.	1	Price Per Week	**$402.00**	**$402.00**	$2,625.00	$2,625.00
12	Monthly Rate for a Heavy Duty pick-up truckMonthly rate is thirty (30) days.	1	Price Per Month	**$1,608.00**	**$1,608.00**	$11,250.00	$11,250.00
13	Daily Rate for a 7-Passenger minivan	1	Price Per Day	**$75.00**	**$75.00**	$220.00	$220.00
14	Weekly Rate for a 7-Passenger minivanWeekly rate is seven (7) days.	13	Price Per Week	**$450.00**	**$5,850.00**	$1,400.00	$18,200.00
15	Monthly Rate for a 7-Passenger minivanMonthly rate is thirty (30) days.	98	Price Per Month	**$1,800.00**	**$176,400.00**	$5,700.00	$558,600.00

No bids were received from Treads Tire and Wheel LLC, Ram Products, LTD, ODP Business Solutions, and Denny's Towing (D Towing LLC).

*Bid received from Herc Rentals Inc. was deemed non-responsive as they did not meet specifications for providing pricing that included collision damage waiver insurance and business traveler's liability insurance.

Bid No. F2025043 Annual Contract for Short-Term Rentals of Cars, Trucks, and Vans

				Herc Rentals Inc. Bonita Springs, FL HUB - No	
				Total Price	*$320,988.00
Line #	Description	QTY	UOM	Per Unit Rate	Total Rate
1	Daily Rate for a high roof Cargo Van	1	Price Per Day	$392.00	$392.00
2	Weekly Rate for a high roof Cargo VanWeekly rate is seven (7) days.	1	Price Per Week	$896.00	$896.00
3	Monthly Rate for a high roof Cargo VanMonthly rate is thirty (30) days.	1	Price Per Month	$2,345.00	$2,345.00
4	Daily Rate for a 4-door Standard sedan	1	Price Per Day	$445.00	$445.00
5	Weekly Rate for a 4-door Standard sedan.Weekly rate is seven (7) days.	1	Price Per Week	$1,045.00	$1,045.00
6	Monthly Rate for a 4-door Standard sedan.Monthly rate is thirty (30) days.	2	Price Per Month	$2,050.00	$4,100.00
7	Daily Rate for a Full Size pick-up truck	1	Price Per Day	$402.00	$402.00
8	Weekly Rate for a Full Size pick-up truckWeekly rate is seven (7) days.	1	Price Per Week	$864.00	$864.00
9	Monthly Rate for a Full Size pick-up truckMonthly rate is thirty (30) days.	24	Price Per Month	$1,767.00	$42,408.00
10	Daily Rate for a Heavy Duty pick-up truck	1	Price Per Day	$444.00	$444.00
11	Weekly Rate for a Heavy Duty pick-up truckWeekly rate is seven (7) days.	1	Price Per Week	$938.00	$938.00
12	Monthly Rate for a Heavy Duty pick-up truckMonthly rate is thirty (30) days.	1	Price Per Month	$2,009.00	$2,009.00
13	Daily Rate for a 7-Passenger minivan	1	Price Per Day	$500.00	$500.00
14	Weekly Rate for a 7-Passenger minivanWeekly rate is seven (7) days.	13	Price Per Week	$1,100.00	$14,300.00
15	Monthly Rate for a 7-Passenger minivanMonthly rate is thirty (30) days.	98	Price Per Month	$2,550.00	$249,900.00

No bids were received from Treads Tire and Wheel LLC, Ram Products, LTD, ODP Business Solutions, and Denny's Towing (D Towing LLC).

*Bid received from Herc Rentals Inc. was deemed non-responsive as they did not meet specifications for providing pricing that included collision damage waiver insurance and business traveler's liability insurance.

TAKINGS IMPACT ASSESSMENT CHECKLIST

Complete this form for any county action that involves the adoption of a regulation, policy, guideline, court resolution, or order.

Project/Regulation Name: Bid No. F20 25043 - Annual Contract for Short-Term Rentals of Cars, Trucks, and Vans - Elections Administration - Various Vendors – Exercise First Option for Renewal - Per Unit Price

County Department: PURCHASING

Contact Person: Melissa Lee, C.P.M., A.P.P.

Phone Number for Contact Person: (817) 884-3245

Type of TIA Performed: (SHORT TIA) or FULL TIA. Circle one after answering the questions in Sections II and III below.

****

I. Stated Purpose

Attach to this checklist an explanation of the purpose of the regulation, policy, guideline, court resolution or order.

****

Note: The remainder of this Takings Impact Assessment Checklist should be completed in consultation with the Criminal District Attorney's Office.

II. Potential Effect on Private Real Property

1. Does the county action require a physical invasion, occupation or dedication of real property?

   Yes_____ No __√__

2. Does the county action limit or restrict a real property right, even partially or temporarily?

   Yes_____ No __√__

If you answered yes to either question, go to Section III. If you answered no to both, STOP HERE and circle SHORT TIA at the top of the form.

****

TARRANT COUNTY
COMMISSIONERS COURT COMMUNICATION

Court Date: December 9, 2025	**Court Order #:**	**Page:** 1 of 14
Department: Purchasing	**Prepared By:** Kehinde Olugbile	**Approved By:** Christopher Lax, CPSM, CPSD, CPCP

SUBJECT:

Bid No. F2025062 - Annual Contract for Biomedical and Hazardous Waste Pickup and Disposal - Countywide - Various Vendors - Exercise First Option for Renewal - Same Firm Fixed Prices

***** CONSENT AGENDA *****

COMMISSIONERS COURT ACTION REQUESTED

It is requested that the Commissioners Court approve renewal of Bid No. F2025062, Annual Contract for Biomedical and Hazardous Waste Pickup and Disposal, for the first optional twelve (12) month period at the same firm fixed prices.

BACKGROUND

On January 28, 2025, the Commissioners Court, through Court Order #144642, awarded Bid No. F2025062, Annual Contract for Biomedical and Hazardous Waste Pickup and Disposal, Countywide, to the following vendors:

Primary	Sharps Compliance, Inc.	Sections I, II, and III
Secondary	AdvoWaste Medical Services, LLC	Section I
	Clean Harbors Environmental Services, Inc.	Section II
	Tradebe Enviromental Services, LLC	Section III

The awards were based upon low bid meeting specifications and contained options to renew for two (2) additional twelve (12) month periods.

The purpose of this contract is for the proper handling of biomedical and hazardous waste pickup and disposal.

The vendors notified Purchasing in writing that they will extend the same contract terms through January 30, 2027. The Medical Examiner's Office and Public Health notified Purchasing in writing that they are pleased with the vendors and want to renew.

Therefore, it is the joint recommendation of the Medical Examiner's Office, Public Health and Purchasing that the Commissioners Court approve renewal of Bid No. F2025062, Annual Contract for Biomedical and Hazardous Waste Pickup and Disposal, for another twelve (12) month period.

Subject to continued funding by the Commissioners Court, this agreement shall automatically renew January 31, 2027, hereafter for one (1) twelve (12) month period ending on January 30, 2028, unless sooner terminated by either party as provided herein.

FISCAL IMPACT

Expenses for the last twelve (12) months were $75,006.00. Funding is available in the following accounts:

T0400-2026 Public Health Fund/5100011000 Public Health/531051 Disposal Service
10000-2026 General Fund/2310100000 Medical Examiner/579017 Enviromental Disposal

Attachments

F2025062 Backup.pdf

TARRANT COUNTY PURCHASING DEPARTMENT
100 E. Weatherford St. #303 • Fort Worth, TX 76196 • (817) 884-1414 • (817) 884-2629 (Fax)

Melissa Lee, C.P.M., A.P.P.
Purchasing Agent

Chris Lax, CPSM, CPSD, CPCP
Assistant Purchasing Agent

November 12, 2025

Todd Cluxton
Sharps Compliance Inc.
9220 Kirby Dr Suite 500,
Houston, TX 77054

Re: IFB No. F2025062 **ANNUAL CONTRACT FOR BIOMEDICAL AND HAZARDOUS WASTE PICK UP AND DISPOSAL**

Dear Todd:

The contract referenced above will expire on January 30, 2026. The contract includes two (2) options to renew for an additional twelve (12) months. The effective dates for the first renewal option will run from January 31, 2026 through January 30, 2027.

Tarrant County Purchasing Department hereby extends an invitation to Sharps Compliance Inc. to accept the first renewal option for an additional one (1) year period as the primary vendor for this bid as awarded on January 28, 2025, Sharps Compliance Inc. acknowledges formal renewal of the option, and any contract is contingent upon review and approval by the Tarrant County Commissioner's Court at a later date. Please mark the appropriate response below and provide your signature above your printed name. All prices must remain firm for the optional renewal period through January 30, 2027.

☑ Yes, Sharps Compliance Inc. will accept the offer to extend the same contract terms through January 30, 2027. **Please include a current 1295 Form with your response.**

☐ No, Sharps Compliance Inc. will NOT accept the offer to extend the same contract terms through January 30, 2027.

Are any other governmental entities currently utilizing this contract? ☐ Yes ☑ No
If yes, please return a listing of the participating entities with this letter.

Please email your signed response.

Sincerely,

Kehinde Olugbile (Nov 14, 2025 08:50:23 CST)
Kehinde Olugbile- Senior Buyer
Tarrant County

Todd Cluxton (Nov 14, 2025 08:47:00 CST)
Todd Cluxton
Sharps Compliance Inc.

11/14/2025
Date

TARRANT COUNTY PURCHASING DEPARTMENT
100 E. Weatherford St. #303 • Fort Worth, TX 76196 • (817) 884-1414 • (817)

Melissa Lee, C.P.M., A.P.P.
Purchasing Agent

Chris Lax, CPSM, CPSD, CPCP

November 12, 2025

Sarah Novoseller
Advowaste Medical Services, LLC
16 S Clifton Street, Suite 201
Lakewood, NJ 08701

Re: IFB No. F2025062 **ANNUAL CONTRACT FOR BIOMEDICAL AND HAZARDOUS WASTE PICK UP AND DISPOSAL**

Dear Sarah:

The contract referenced above will expire on January 30, 2026. The contract includes two (2) options to renew for an additional twelve (12) months. The effective dates for the first renewal option will run from January 31, 2026 through January 30, 2027.

Tarrant County Purchasing Department hereby extends an invitation to Advowaste Medical Services, LLC to accept the first renewal option for an additional one (1) year period as the secondary vendor for this bid as awarded on January 28, 2025, Advowaste Medical Services, LLC acknowledges formal renewal of the option, and any contract is contingent upon review and approval by the Tarrant County Commissioner's Court at a later date. Please mark the appropriate response below and provide your signature above your printed name. All prices must remain firm for the optional renewal period through January 30, 2027.

Yes, Advowaste Medical Services, LLC will accept the offer to extend the same contract terms through January 30, 2027. **Please include a current 1295 Form with your response.**

No, Advowaste Medical Services, LLC will NOT accept the offer to extend the same contract terms through January 30, 2027.

Are any other governmental entities currently utilizing this contract? Yes (No)
If yes, please return a listing of the participating entities with this letter.

Please email your signed response.

Sincerely,

Damio
Kehinde Olugbile- Senior Buyer
Tarrant County

Sarah Novoseller
Advowaste Medical Services, LLC

11-14-2025
Date

TARRANT COUNTY PURCHASING DEPARTMENT
100 E. Weatherford St. #303 • Fort Worth, TX 76196 • (817) 884-1414 • (817) 884-2629 (Fax)

Melissa Lee, C.P.M., A.P.P.
Purchasing Agent

Chris Lax, CPSM, CPSD, CPCP
Assistant Purchasing Agent

November 12, 2025

Kendrick Harrison
Clean Harbors Environmental Services Inc.
42 Longwater drive
Norwell, MA 02061

Re: IFB No. F2025062 **ANNUAL CONTRACT FOR BIOMEDICAL AND HAZARDOUS WASTE PICK UP AND DISPOSAL**

Dear Kendrick:

The contract referenced above will expire on January 30, 2026. The contract includes two (2) options to renew for an additional twelve (12) months. The effective dates for the first renewal option will run from January 31, 2026 through January 30, 2027.

Tarrant County Purchasing Department hereby extends an invitation to Clean Harbors Environmental Services Inc. to accept the first renewal option for an additional one (1) year period as the secondary vendor for this bid as awarded on January 28, 2025, Clean Harbors Environmental Services Inc. acknowledges formal renewal of the option, and any contract is contingent upon review and approval by the Tarrant County Commissioner's Court at a later date. Please mark the appropriate response below and provide your signature above your printed name. All prices must remain firm for the optional renewal period through January 30, 2027.

☑ Yes, Clean Harbors Environmental Services Inc. will accept the offer to extend the same contract terms through January 30, 2027. **Please include a current 1295 Form with your response.**

☐ No, Clean Harbors Environmental Services Inc. will NOT accept the offer to extend the same contract terms through January 30, 2027.

Are any other governmental entities currently utilizing this contract? ☐ Yes ☑ No
If yes, please return a listing of the participating entities with this letter.

Please email your signed response.

Sincerely,

Damio
Kehinde Olugbile- Senior Buyer
Tarrant County

Kendrick Harrison
Clean Harbors Environmental Services Inc.

14-11-2025
Date

TARRANT COUNTY PURCHASING DEPARTMENT
100 E. Weatherford St. #303 • Fort Worth, TX 76196 • (817) 884-1414 • (817) 884-2629 (Fax)

Melissa Lee, C.P.M., A.P.P.
Purchasing Agent

Chris Lax, CPSM, CPSD, CPCP
Assistant Purchasing Agent

November 14, 2025

Colin Burden
Tradebe Environmental Services, LLC
1433 E. 83rd Ave. Suite 200
Merrillville, IN 46410

Re: IFB No. F2025062 **ANNUAL CONTRACT FOR BIOMEDICAL AND HAZARDOUS WASTE PICK UP AND DISPOSAL**

Dear Colin:

The contract referenced above will expire on January 30, 2026. The contract includes two (2) options to renew for an additional twelve (12) months. The effective dates for the first renewal option will run from January 31, 2026 through January 30, 2027.

Tarrant County Purchasing Department hereby extends an invitation to Tradebe Environmental Services, LLC to accept the first renewal option for an additional one (1) year period as the secondary vendor for this bid as awarded on January 28, 2025, Tradebe Environmental Services, LLC acknowledges formal renewal of the option, and any contract is contingent upon review and approval by the Tarrant County Commissioner's Court at a later date. Please mark the appropriate response below and provide your signature above your printed name. All prices must remain firm for the optional renewal period through January 30, 2027.

x Yes, Tradebe Environmental Services, LLC will accept the offer to extend the same contract terms through January 30, 2027. **Please include a current 1295 Form with your response.**

☐ No, Tradebe Environmental Services, LLC will NOT accept the offer to extend the same contract terms through January 30, 2027.

Please email your signed response.

Sincerely,

Kehinde Olugbile- Senior Buyer
Tarrant County

Colin Burden
Colin Burden
Tradebe Environmental Services, LLC

11.14.2025
Date

Memorandum

To: Gary L. Collins, Contract Specialist, Public Health Department

Dept: Public Health

From: Kehinde Olugbile, Sr. Buyer, Purchasing Department

Date: 11/10/2025

Re: First Renewal of RFP No. F2025062, Annual Contract for Biomedical and Hazardous Waste Pickup and Disposal

---

The above referenced contract will expire on January 30, 2026. This contract included two (2) options to renew with the vendors for additional twelve (12) month terms. The first renewal term would commence January 31, 2026 and would expire January 30, 2027.

If you wish to exercise this option to renew and continue this contract with the vendors listed below for twelve more months, please check the appropriate item and email this form back to me by November 12, 2025:

Primary: Sharps Compliance, Inc.

Secondary: AdvoWaste Medical Services, LLC
Clean Harbors Environmental Services, Inc.
Tradebe Environmental Services, LLC

__X___ Yes, I wish to continue the current contract with the above mentioned vendor for the first renewal term of the contract.

Funds to support this contract will be provided by the following accounts:

_T0400-2026/5100011000/531051_____

_____No, I do not wish to continue the current contract with the above-mentioned vendor for the following reason(s).

_____

SIGNATURE: *Gary L. Collins* DATE: 11/12/2025

Memorandum

To: Kelly Clark

Dept: Medical Examiner

From: Kehinde Olugbile, Sr. Buyer, Purchasing Department

Date: 11/10/2025

Re: First Renewal of RFP No. F2025062, Annual Contract for Biomedical and Hazardous Waste Pickup and Disposal

---

The above referenced contract will expire on January 30, 2026. This contract included two (2) options to renew with the vendors for additional twelve (12) month terms. The first renewal term would commence January 31, 2026 and would expire January 30, 2027.

If you wish to exercise this option to renew and continue this contract with the vendors listed below for twelve more months, please check the appropriate item and email this form back to me by November 12, 2025:

Primary: Sharps Compliance, Inc.

Secondary: AdvoWaste Medical Services, LLC
Clean Harbors Environmental Services, Inc.
Tradebe Environmental Services, LLC

___x__ Yes, I wish to continue the current contract with the above mentioned vendor for the first renewal term of the contract.

Funds to support this contract will be provided by the following accounts:

579017/10000-2026/2310100000

_____No, I do not wish to continue the current contract with the above-mentioned vendor for the following reason(s).

SIGNATURE: Barbara McCarty Digitally signed by Barbara McCarty Date: 2025.11.18 12:49:18 -06'00' DATE: November 18, 2025

Bid No. F2025062 Annual Contract for Biomedical and Hazardous Waste Pickup and Disposal

				Sharps Compliance Inc. Houston,TX HUB - No CO-OP - Yes		*AdvoWaste Medical Services, LLC Lakewood, NJ HUB - NO CO-OP - Yes*	
				Total Price	**$34,521.00**	Total Price	*$22,450.00*
Line #	Description	QTY	UOM	Unit	Extended	Unit	Extended
SECTION I - BIOMEDICAL WASTE PICKUP AND DISPOSAL				**Primary**		*Secondary*	
3	Scheduled Pick-Up and Disposal of Biomedical Waste (not including pathological waste) Estimated 250-300 boxes per year	300	Per Box	**$22.00**	**$6,600.00**	*$22.00*	*$6,600.00*
4	Unscheduled Pick-Up and Disposal of Biomedical Waste (not including pathological waste) Estimated 250-300 containers per year	300	Per Box	**$22.00**	**$6,600.00**	*$22.00*	*$6,600.00*
5	Scheduled Pick-Up and Disposal of Pathological Waste Estimated 200-250 boxes per year	250	Per Pickup	**$35.00**	**$8,750.00**	*$37.00*	*$9,250.00*
Section I Total				Total	**$21,950.00**	Total	*$22,450.00*
SECTION II - HAZARDOUS CHEMICAL WASTE PICKUP AND DISPOSAL				**Primary**			
7	DNA Extraction Cartridges55 gallon open drum: 2-3 times per year	3	55 gallon open drum	**$900.00**	**$2,700.00**	No Bid	
8	Formalin and Water55 gallon closed drum: 8-12 times per year	12	55 gallon closed drum	**$250.00**	**$3,000.00**	No Bid	
9	Inorganic Salts Solution35 gallon open drum: 2 times per year	2	35 gallon open drum	**$175.00**	**$350.00**	No Bid	
10	Paraffin and Xylene35 gallon open drum: 3-6 times per year	6	35 gallon open drum	**$365.00**	**$2,190.00**	No Bid	
11	Spent Acid in Rinse Water5 gallon container: 2 times per year	2	5 gallon container	**$190.00**	**$380.00**	No Bid	
12	Spent Organic Solvents55 gallon closed drum: 12 times per year	12	55 gallon closed drum	**$190.00**	**$2,280.00**	No Bid	
13	Liquid Waste Stream for Public Health Lab15 gallon drum: 3-4 times per year	4	15 gallon drum	**$275.00**	**$1,100.00**	No Bid	
14	Halogenated Solvents5 gallon drum: 2-3 times per year	3	5 gallon drum	**$145.00**	**$435.00**	No Bid	
Section II Total				Total	**$12,435.00**	Total	No Bid
SECTION III - SUPPLIES (IF NEEDED)				**Primary**			
16	Empty, Poly, Open Top Drum – 55 gallonQuantity Unknown	1	closed drum	**$86.00**	**$86.00**	No Bid	
17	Empty, Poly, Open Top Pail – 5 gallonQuantity Unknown	1	5 gallon drum	**$25.00**	**$25.00**	No Bid	
18	Empty, Poly, Closed Top Drum – 5 gallonQuantity Unknown	1	5 gallon drum	**$25.00**	**$25.00**	No Bid	
Section III Total				Total	**$136.00**	Total	No Bid

Bid No. F2025062 Annual Contract for Biomedical and Hazardous Waste Pickup and Disposal

				Tradebe Environmental Services, LLC Merrillville, IN HUB - No CO-OP - No		*Clean Harbors Environmental Services Inc Norwell, MA HUB - No CO-OP - No*	
				Total Price	$19,455.00	Total Price	$52,357.80
Line #	Description	QTY	UOM	Unit	Extended	Unit	Extended
SECTION I - BIOMEDICAL WASTE PICKUP AND DISPOSAL							
3	Scheduled Pick-Up and Disposal of Biomedical Waste (not including pathological waste) Estimated 250-300 boxes per year	300	Per Box	No Bid		$33.75	$10,125.00
4	Unscheduled Pick-Up and Disposal of Biomedical Waste (not including pathological waste) Estimated 250-300 containers per year	300	Per Box	No Bid		$55.00	$16,500.00
5	Scheduled Pick-Up and Disposal of Pathological Waste Estimated 200-250 boxes per year	250	Per Pickup	No Bid		$45.00	$11,250.00
Section I Total				Total	No Bid	Total	$37,875.00
SECTION II - HAZARDOUS CHEMICAL WASTE PICKUP AND DISPOSAL						*Secondary*	
7	DNA Extraction Cartridges55 gallon open drum: 2-3 times per year	3	55 gallon open drum	$700.00	$2,100.00	*$550.00*	*$1,650.00*
8	Formalin and Water55 gallon closed drum: 8-12 times per year	12	55 gallon closed drum	$500.00	$6,000.00	*$372.25*	*$4,467.00*
9	Inorganic Salts Solution35 gallon open drum: 2 times per year	2	35 gallon open drum	$250.00	$500.00	*$372.25*	*$744.50*
10	Paraffin and Xylene35 gallon open drum: 3-6 times per year	6	35 gallon open drum	$700.00	$4,200.00	*$550.00*	*$3,300.00*
11	Spent Acid in Rinse Water5 gallon container: 2 times per year	2	5 gallon container	$135.00	$270.00	*$210.10*	*$420.20*
12	Spent Organic Solvents55 gallon closed drum: 12 times per year	12	55 gallon closed drum	$350.00	$4,200.00	*$176.75*	*$2,121.00*
13	Liquid Waste Stream for Public Health Lab15 gallon drum: 3-4 times per year	4	15 gallon drum	$375.00	$1,500.00	*$236.55*	*$946.20*
14	Halogenated Solvents5 gallon drum: 2-3 times per year	3	5 gallon drum	$175.00	$525.00	*$210.10*	*$630.30*
Section II Total				Total	$19,295.00	Total	*$14,279.20*
SECTION III - SUPPLIES (IF NEEDED)				*Secondary*			
16	Empty, Poly, Open Top Drum – 55 gallonQuantity Unknown	1	closed drum	*$110.00*	*$110.00*	$139.00	$139.00
17	Empty, Poly, Open Top Pail – 5 gallonQuantity Unknown	1	5 gallon drum	*$25.00*	*$25.00*	$27.60	$27.60
18	Empty, Poly, Closed Top Drum – 5 gallonQuantity Unknown	1	5 gallon drum	*$25.00*	*$25.00*	$37.00	$37.00
Section III Total				Total	*$160.00*	Total	$203.60

Bid No. F2025062 Annual Contract for Biomedical and Hazardous Waste Pickup and Disposal

				Lone Star Hazmat Response, LLC Tyler, TX HUB - No		Hazmat Environmental Services,Inc. Dallas, TX HUB - No	
				Total Price	$611,500.00	Total Price	$22,246.50
Line #	Description	QTY	UOM	Unit	Extended	Unit	Extended
SECTION I - BIOMEDICAL WASTE PICKUP AND DISPOSAL							
3	Scheduled Pick-Up and Disposal of Biomedical Waste (not including pathological waste) Estimated 250-300 boxes per year	300	Per Box	$510.00	$153,000.00	No Bid	
4	Unscheduled Pick-Up and Disposal of Biomedical Waste (not including pathological waste) Estimated 250-300 containers per year	300	Per Box	$945.00	$283,500.00	No Bid	
5	Scheduled Pick-Up and Disposal of Pathological Waste Estimated 200-250 boxes per year	250	Per Pickup	$700.00	$175,000.00	No Bid	
Section I Total				Total	$611,500.00	Total	No Bid
SECTION II - HAZARDOUS CHEMICAL WASTE PICKUP AND DISPOSAL							
7	DNA Extraction Cartridges 55 gallon open drum: 2-3 times per year	3	55 gallon open drum	No Bid		$762.45	$2,287.35
8	Formalin and Water 55 gallon closed drum: 8-12 times per year	12	55 gallon closed drum	No Bid		$672.75	$8,073.00
9	Inorganic Salts Solution 35 gallon open drum: 2 times per year	2	35 gallon open drum	No Bid		$493.35	$986.70
10	Paraffin and Xylene 35 gallon open drum: 3-6 times per year	6	35 gallon open drum	No Bid		$403.65	$2,421.90
11	Spent Acid in Rinse Water 5 gallon container: 2 times per year	2	5 gallon container	No Bid		$269.10	$538.20
12	Spent Organic Solvents 55 gallon closed drum: 12 times per year	12	55 gallon closed drum	No Bid		$403.65	$4,843.80
13	Liquid Waste Stream for Public Health Lab 15 gallon drum: 3-4 times per year	4	15 gallon drum	No Bid		$403.65	$1,614.60
14	Halogenated Solvents5 gallon drum: 2-3 times per year	3	5 gallon drum	No Bid		$403.65	$1,210.95
Section II Total				Total	No Bid	Total	$21,976.50
SECTION III - SUPPLIES (IF NEEDED)							
16	Empty, Poly, Open Top Drum – 55 gallonQuantity Unknown	1	closed drum	$128.00	$128.00	$190.00	$190.00
17	Empty, Poly, Open Top Pail – 5 gallon Quantity Unknown	1	5 gallon drum	$20.00	$20.00	$40.00	$40.00
18	Empty, Poly, Closed Top Drum – 5 gallon Quantity Unknown	1	5 gallon drum	$20.00	$20.00	$40.00	$40.00
Section III Total				Total	$168.00	Total	$270.00

No-Bids: ODP Business Solutions and Olivares Electric of El Paso, LLC

TAKINGS IMPACT ASSESSMENT CHECKLIST

Complete this form for any county action that involves the adoption of a regulation, policy, guideline, court resolution, or order.

Project/Regulation Name: Bid No. F2025062 - Annual Contract for Biomedical and Hazardous Waste Pickup and Disposal - Countywide - Various Vendors - Same Firm Fixed Prices

County Department: PURCHASING

Contact Person: Melissa Lee, C.P.M., A.P.P.

Phone Number for Contact Person: (817) 884-3245

Type of TIA Performed: (SHORT TIA) or FULL TIA. Circle one after answering the questions in Sections II and III below.

****

I. Stated Purpose

Attach to this checklist an explanation of the purpose of the regulation, policy, guideline, court resolution or order.

****

Note: The remainder of this Takings Impact Assessment Checklist should be completed in consultation with the Criminal District Attorney's Office.

II. Potential Effect on Private Real Property

1. Does the county action require a physical invasion, occupation or dedication of real property?

   Yes_____ No __√__

2. Does the county action limit or restrict a real property right, even partially or temporarily?

   Yes_____ No __√__

If you answered yes to either question, go to Section III. If you answered no to both, STOP HERE and circle SHORT TIA at the top of the form.

****

TARRANT COUNTY
COMMISSIONERS COURT COMMUNICATION

Court Date: December 9, 2025	**Court Order #:**	**Page:** 1 of 9
Department: Purchasing	**Prepared By:** Gwen Peterson, C.P.M., A.P.P.	**Approved By:** Christopher Lax, CPSM, CPSD, CPCP

SUBJECT:

Bid No. F2025076 - Annual Contract for Installation and Removal of Guard Fence - All Precincts - Vann/Elli, Inc. - Exercise First Option for Renewal - Same Firm Fixed Prices

***** CONSENT AGENDA *****

COMMISSIONERS COURT ACTION REQUESTED

It is requested that the Commissioners Court approve renewal of Bid No. F2025076, Annual Contract for Installation and Removal of Guard Fence, for the first optional twelve (12) month period at the same firm fixed prices.

BACKGROUND

On April 2, 2025, the Commissioners Court, through Court Order #144965, awarded Bid No. F2025076, Annual Contract for Installation and Removal of Guard Fence, for all Precincts, to Vann/Elli, Inc.

The award was based upon low bid meeting specifications and contained options to renew for two (2) additional twelve (12) month periods.

This contract is primarily utilized by the Precincts for installation, repair, and removal of guardrails for the safety of motorists and to comply with current roadway standards.

The vendor notified Purchasing in writing that their prices will remain firm through April 29, 2027. The four (4) Maintenance Precincts notified Purchasing in writing that they are pleased with the vendor and want to renew.

Therefore, it is the joint recommendation of the four (4) Maintenance Precincts and Purchasing that the Commissioners Court approve renewal of Bid No. F2025076, Annual Contract for Installation and Removal of Guard Fence, for another twelve (12) month period.

Subject to continued funding by the Commissioners Court, this agreement shall automatically renew April 30, 2027, hereafter for one (1) twelve (12) month period ending on April 29, 2028, unless sooner terminated by either party as provided herein.

FISCAL IMPACT

Expenses for the last twelve (12) months were $153,384.00. Funding is available in the following accounts:

26100-2026 Road and Bridge Fund/6110300000 Precinct 1 Maintenance/553011 Bridge Programs
26100-2026 Road and Bridge Fund/6210300000 Precinct 2 Maintenance/569011 Professional Services
26100-2026 Road and Bridge Fund/6310300000 Precinct 3 Maintenance/558045 ROW/Road Maintenance Materials
26100-2026 Road and Bridge Fund/6410300000 Precinct 4 Maintenance/558045 ROW/Road Maintenance Materials

Attachments

Backup.pdf

TARRANT COUNTY PURCHASING DEPARTMENT
100 E. Weatherford St. #303 • Fort Worth, TX 76196 • (817) 884-1414 • (817) 884-2629 (Fax)

Melissa Lee, C.P.M., A.P.P.
Purchasing Agent

Chris Lax, MS.SCM, CPSM, CPSD, CPCP
Assistant Purchasing Agent

November 4, 2025

Bonnie Davis, President
Vann/Elli Inc.
1141 S. Broadway PO Box 1060
Joshua, Texas 76058
Phone: 817-558-4052

Re: Bid No F2025076, Annual Contract for Installation and Removal of Guard Fence

Dear Ms. Davis:

Referenced bid was for twelve (12) months with two (2) options to renew for additional twelve (12) months each. The original contract was for the period of April 30, 2025 through April 29, 2026. The effective dates for the first renewal option will run from April 30, 2026 through April 29, 2027.

Tarrant County Purchasing Department hereby extends an invitation to Vann/Elli Inc. to accept the first option for an additional one (1) year period as the vendor for this bid as awarded on April 2, 2025. Vann/Elli Inc. acknowledges formal renewal of the option, and any contract is contingent upon review and approval by the Tarrant County Commissioner's Court at a later date. Please mark the appropriate response below and provide your signature above your printed name. All prices must remain firm for the optional renewal period through April 29, 2027.

(●) Yes, Vann/Elli Inc. will accept the offer to extend the same contract pricing and discounts through April 29, 2027. **Please include a current 1295 Form with your response.**

( ) No, Vann/Elli Inc. will NOT accept the offer to extend the same contract pricing and discounts through April 29, 2027.

Are any other governmental entities currently utilizing this contract? (●) Yes ( ) No
If yes, please return a listing of the participating entities with this letter.

Please email your signed response.

Sincerely,

Gwen Peterson
Gwen Peterson, Senior Buyer
Tarrant County
817-884-1145

Bonnie Davis Digitally signed by Bonnie Davis Date: 2025.11.06 10:19:45 -06'00'
Bonnie Davis President
Vann/Elli Inc.

Date

Vann-Elli, Inc.

November 6, 2025

Tarrant County Purchasing
G.K. Maenius Administration Building
100 E Weatherford St. Suite 303
Fort Worth, TX 76196-0104
Attn: Gwen Peterson, C.P.M.,A.P.P.

RE: F2025076, Contract Renewal -Participating Entities

Dear Ms Peterson,

The following entities have used the Tarrant County Contract F2025076:

City of Azle
City of Burleson
City of Lewisville
City of Sachse

Please let me know if you need anything else.

Kind regards

Bonnie Davis
President

Vann/Elli, Inc.
1411 South Broadway / PO Box 1060/Joshua, TX 76058
Office 817-558-4052 Fax 817-645-5352

Memorandum

To: Jessica Phillips

Dept: Precinct 1 Maintenance

From: Gwen Peterson, C.P.M., A.P.P., Sr. Buyer, Purchasing Department

Date: November 3, 2025

Re: Bid No. F2025076, Annual Contract for Installation and Removal of Guard Fence

---

The above referenced contract will expire on April 29, 2026. This contract included two (2) options to renew with the vendor for additional twelve (12) month terms. The first renewal term would commence April 30, 2026 and would expire April 29, 2027.

If you wish to exercise the first option to renew and continue this contract with the vendor listed below for twelve more months, please check the appropriate item and email your response to me.

Awarded Vendor: Vann/Elli, Inc.

◉ Yes, I wish to continue the current contract with the above-mentioned vendor for the first renewal term of the contract.

Funds to support this contract will be provided by the following accounts:

553011/26100-2026/6110300000

○ No, I do not wish to continue the current contract with the above-mentioned vendor for the following reason(s).

SIGNATURE: Jessica Phillips DATE: 11/3/25

Memorandum

To: Bridgett Burciaga

Dept: Precinct 2 Maintenance

From: Gwen Peterson, C.P.M., A.P.P., Sr. Buyer, Purchasing Department

Date: November 3, 2025

Re: Bid No. F2025076, Annual Contract for Installation and Removal of Guard Fence

---

The above referenced contract will expire on April 29, 2026. This contract included two (2) options to renew with the vendor for additional twelve (12) month terms. The first renewal term would commence April 30, 2026 and would expire April 29, 2027.

If you wish to exercise the first option to renew and continue this contract with the vendor listed below for twelve more months, please check the appropriate item and email your response to me.

Awarded Vendor: Vann/Elli, Inc.

(◉) Yes, I wish to continue the current contract with the above-mentioned vendor for the first renewal term of the contract.

Funds to support this contract will be provided by the following accounts:

569011/6210300000/26100-2026

( ) No, I do not wish to continue the current contract with the above-mentioned vendor for the following reason(s).

SIGNATURE: _____ DATE: 11/4/25

Memorandum

To: Amanda Parks

Dept: Precinct 3 Maintenance

From: Gwen Peterson, C.P.M., A.P.P., Sr. Buyer, Purchasing Department

Date: November 3, 2025

Re: Bid No. F2025076, Annual Contract for Installation and Removal of Guard Fence

---

The above referenced contract will expire on April 29, 2026. This contract included two (2) options to renew with the vendor for additional twelve (12) month terms. The first renewal term would commence April 30, 2026 and would expire April 29, 2027.

If you wish to exercise the first option to renew and continue this contract with the vendor listed below for twelve more months, please check the appropriate item and email your response to me.

Awarded Vendor: Vann/Elli, Inc.

◉ Yes, I wish to continue the current contract with the above-mentioned vendor for the first renewal term of the contract.

Funds to support this contract will be provided by the following accounts:

26100-2026/558045/6310300000

○ No, I do not wish to continue the current contract with the above-mentioned vendor for the following reason(s).

SIGNATURE: Amanda Parks _____ DATE: 11/3/2025

Memorandum

To: D'Renda Cummings

Dept: Precinct 4 Maintenance

From: Gwen Peterson, C.P.M., A.P.P., Sr. Buyer, Purchasing Department

Date: November 3, 2025

Re: Bid No. F2025076, Annual Contract for Installation and Removal of Guard Fence

---

The above referenced contract will expire on April 29, 2026. This contract included two (2) options to renew with the vendor for additional twelve (12) month terms. The first renewal term would commence April 30, 2026 and would expire April 29, 2027.

If you wish to exercise the first option to renew and continue this contract with the vendor listed below for twelve more months, please check the appropriate item and email your response to me.

Awarded Vendor: Vann/Elli, Inc.

◉ Yes, I wish to continue the current contract with the above-mentioned vendor for the first renewal term of the contract.

Funds to support this contract will be provided by the following accounts:

26100-2026-558045-6410300000

○ No, I do not wish to continue the current contract with the above-mentioned vendor for the following reason(s).

SIGNATURE: Randall Plate Digitally signed by Randall Plate Date: 2025.11.03 16:04:42 -06'00' DATE: 11-03-2025

Bid No. F2025076 Annual Contract for Installation and Removal of Guard Fence

				Award Vann/Elli, Inc. Joshua, TX HUB - No CO-OP - Yes	
				Total Price	**$384,649.00**
		QTY	UOM	**Unit**	**Extended**
2	Installation of Guard Fence				
2.1	Provide and Install Metal W-Beam Guard Fence, 12 Gauge, Timber Post, 28 inch or 31 inch.	1715	Per Linear Foot	**$42.00**	**$72,030.00**
2.2	Provide and Install Metal Beam Guard Fence Transition, Low Speed Transition, 28 inch or 31 inch.	1	Each	**$4,135.00**	**$4,135.00**
2.3	Provide and Install Metal Beam Guard Fence Transition, Three-Beam Transition, 28 inch or 31 inch.	7	Each	**$5,317.00**	**$37,219.00**
2.4	Provide and Install Metal W-Beam Guard Fence, Short Radius, 28 inch or 31 inch.	50	Per Linear Foot	**$67.50**	**$3,375.00**
2.5	Provide and Install Single Guardrail Terminal, 28 inch or 31 inch.	38	Each	**$6,200.00**	**$235,600.00**
2.6	Provide and Install Metal Beam Guard Fence, Long Span System.	100	Per Linear Foot	**$42.00**	**$4,200.00**
2.7	Provide and Install Low Fill Culvert Post, 28 inch or 31 inch.	1	Each	**$2,800.00**	**$2,800.00**
2.8	Provide and Install Extra Long Steel Post for use on double stacked metal guard fence.	4	Each	**$425.00**	**$1,700.00**
2.9	Provide and Install Flared End Wings to provide safety end for the metal beam guard fence.	15	Each	**$250.00**	**$3,750.00**
3	Removal of Guard Fence				
3.1	Remove and Dispose of Metal Beam Guard Fence and Post.	1464	Per Linear Foot	**$10.00**	**$14,640.00**
3.2	Remove and Dispose of Terminal Anchor Section.	13	Each	**$400.00**	**$5,200.00**

Notes: A no-bid response was received from CMP Commercial Construction, Inc., Construction Solutions USA LLC, Johnson Construction Services, LLC, Llano River Fence Company, LLC, and Texas Pipeline Services.

TAKINGS IMPACT ASSESSMENT CHECKLIST

Complete this form for any county action that involves the adoption of a regulation, policy, guideline, court resolution, or order.

Project/Regulation Name: Bid No. F2025076 – Annual Contract for Installation and Removal of Guard Fence – All Precincts – Vann/Elli, Inc. – Exercise First Option for Renewal – Same Firm Fixed Prices

County Department: PURCHASING

Contact Person: Melissa Lee, C.P.M., A.P.P.

Phone Number for Contact Person: (817) 884-3245

Type of TIA Performed: (SHORT TIA) or FULL TIA. Circle one after answering the questions in Sections II and III below.

****

I. Stated Purpose

Attach to this checklist an explanation of the purpose of the regulation, policy, guideline, court resolution or order.

****

Note: The remainder of this Takings Impact Assessment Checklist should be completed in consultation with the Criminal District Attorney's Office.

II. Potential Effect on Private Real Property

1. Does the county action require a physical invasion, occupation or dedication of real property?

   Yes_____ No __√__

2. Does the county action limit or restrict a real property right, even partially or temporarily?

   Yes_____ No __√__

If you answered yes to either question, go to Section III. If you answered no to both, STOP HERE and circle SHORT TIA at the top of the form.

****

TARRANT COUNTY
COMMISSIONERS COURT COMMUNICATION

Court Date: December 9, 2025	**Court Order #:**	**Page:** 1 of 14
Department: Purchasing	**Prepared By:** Gwen Peterson, C.P.M., A.P.P.	**Approved By:** Christopher Lax, CPSM, CPSD, CPCP

SUBJECT:

Bid No. F2025077 - Annual Contract for Preventative Maintenance and Cleaning of Commercial Kitchen Vent Hoods and Ceiling Registers, and Deep Cleaning Services - Facilities Management - Various Vendors - Exercise First Option for Renewal - Same Firm Fixed Prices

***** CONSENT AGENDA *****

COMMISSIONERS COURT ACTION REQUESTED

It is requested that the Commissioners Court approve renewal of Bid No. F2025077, Annual Contract for Preventative Maintenance and Cleaning of Commercial Kitchen Vent Hoods and Ceiling Registers, and Deep Cleaning Services, for the first optional twelve (12) month period at the same firm fixed prices.

BACKGROUND

On April 15, 2025, the Commissioners Court, through Court Order #145079, awarded Bid No. F2025077, Annual Contract for Preventative Maintenance and Cleaning of Commercial Kitchen Vent Hoods and Ceiling Registers, and Deep Cleaning Services, for Facilities Management, to the following vendors:

Primary	Guardian Power Cleaning of Dallas, Inc. d/b/a Guardian Services
Secondary	Kept Companies, Inc.

The awards were based upon low bid meeting specifications and contained options to renew for two (2) additional twelve (12) month periods.

This contract is utilized for preventative maintenance and cleaning of commercial kitchen vent hoods and ceiling registers at jail locations. Services include inspecting, testing, and cleaning exhaust fans; removing and cleaning filters; cleaning vent hood light fixtures and fire suppression systems; polishing interior and exterior of vent hoods; testing vent hood components; and cleaning and sanitizing HVAC registers. Additionally, the contract is utilized in the Scott D. Moore Juvenile Justice Center for deep cleaning the floors and walls of the commercial kitchen.

The vendors notified Purchasing in writing that their prices will remain firm through May 2, 2027. Facilities Management notified Purchasing in writing that they are pleased with the vendors and wants to renew.

Therefore, it is the joint recommendation of Facilities Management and Purchasing that the Commissioners Court approve renewal of Bid No. F2025077, Annual Contract for Preventative Maintenance and Cleaning of Commercial Kitchen Vent Hoods and Ceiling Registers, and Deep Cleaning Services, for another twelve (12) month period.

Subject to continued funding by the Commissioners Court, this agreement shall automatically renew May 3, 2027, hereafter for one (1) twelve (12) month period ending on May 2, 2028, unless sooner terminated by either party as provided herein.

FISCAL IMPACT

Expenses for the last twelve (12) months were $24,700.00. Funding is available in account 10000-2026 General Fund/Various Cost Centers/532011 Building Maintenance.

Attachments

Backup.pdf

TARRANT COUNTY PURCHASING DEPARTMENT
100 E. Weatherford St. #303 • Fort Worth, TX 76196 • (817) 884-1414 • (817) 884-2629 (Fax)

Melissa Lee, C.P.M., A.P.P.
Purchasing Agent

Chris Lax, MS.SCM, CPSM, CPSD, CPCP
Assistant Purchasing Agent

November 3, 2025

Guardian Power Cleaning of Dallas Inc.
2625 National Circle
Garland, TX 75041

Re: Bid No. F2025077, Annual Contract for Preventative Maintenance and Cleaning of Commercial Kitchen Vent Hoods, and Ceiling Registers, and Deep Cleaning Services

Dear Nick:

Referenced bid was for twelve (12) months with two (2) options to renew for additional twelve (12) months each. The original contract was for the period of May 3, 2025 through May 2, 2026. The effective dates for the first renewal option will run from May 3, 2026 through May 2, 2027.

Tarrant County Purchasing Department hereby extends an invitation to Guardian Power Cleaning of Dallas Inc. to accept the first option for an additional one (1) year period as the **Primary** vendor for this bid as awarded on April 15, 2025. Guardian Power Cleaning of Dallas Inc. acknowledges formal renewal of the option, and any contract is contingent upon review and approval by the Tarrant County Commissioner's Court at a later date. Please mark the appropriate response below and provide your signature above your printed name. All prices must remain firm for the optional renewal period through May 2, 2027.

(X) Yes, Guardian Power Cleaning of Dallas Inc. will accept the offer to extend the same contract pricing through May 2, 2027. **Please include a current 1295 Form with your response.**

( ) No, Guardian Power Cleaning of Dallas Inc. will NOT accept the offer to extend the same contract pricing through May 2, 2027.

Are any other governmental entities currently utilizing this contract? ( ) Yes (X) No
If yes, please return a listing of the participating entities with this letter.

Please email your signed response.

Sincerely,

Gwen Peterson
Gwen Peterson, Senior Buyer
Tarrant County
817-884-1145

Nicholas Polson
Guardian Power Cleaning of Dallas Inc.

11/5/2025
Date

TARRANT COUNTY PURCHASING DEPARTMENT
100 E. Weatherford St. #303 • Fort Worth, TX 76196 • (817) 884-1414 • (817) 884-2629 (Fax)

Melissa Lee, C.P.M., A.P.P.
Purchasing Agent

Chris Lax, MS.SCM, CPSM, CPSD, CPCP
Assistant Purchasing Agent

November 3, 2025

Kept Companies, Inc.
26 Law Drive
Fairfield, NJ 07004

Re: Bid No. F2025077, Annual Contract for Preventative Maintenance and Cleaning of Commercial Kitchen Vent Hoods, and Ceiling Registers, and Deep Cleaning Services

Dear Lorraine,

Referenced bid was for twelve (12) months with two (2) options to renew for additional twelve (12) months each. The original contract was for the period of May 3, 2025 through May 2, 2026. The effective dates for the first renewal option will run from May 3, 2026 through May 2, 2027.

Tarrant County Purchasing Department hereby extends an invitation to Kept Companies, Inc. to accept the first option for an additional one (1) year period as the **Secondary** vendor for this bid as awarded on April 15, 2025. Kept Companies, Inc. acknowledges formal renewal of the option, and any contract is contingent upon review and approval by the Tarrant County Commissioner's Court at a later date. Please mark the appropriate response below and provide your signature above your printed name. All prices must remain firm for the optional renewal period through May 2, 2027.

(●) Yes, Kept Companies, Inc. will accept the offer to extend the same contract pricing through May 2, 2027. **Please include a current 1295 Form with your response.**

( ) No, Kept Companies, Inc. will NOT accept the offer to extend the same contract pricing through May 2, 2027.

Please email your signed response.

Sincerely,

Gwen Peterson
Gwen Peterson, Senior Buyer
Tarrant County
817-884-1145

Lorraine Matarazzo
Lorraine Matarazzo, CAO
Kept Companies, Inc.

11/04/25
Date

Memorandum

To: Willie Shephard, Joshua Palmer, Chad Raines

Dept: Facilities Management

From: Gwen Peterson, C.P.M., A.P.P., Sr. Buyer, Purchasing Department

Date: November 3, 2025

Re: Renewal of Bid No. F2025077, Annual Contract for Preventative Maintenance and Cleaning of Commercial Kitchen Vent Hoods, and Ceiling Registers, and Deep Cleaning Services

---

The above referenced contract will expire on May 2, 2026. This contract included two (2) options to renew with the vendors for additional twelve (12) month terms. The first renewal term would commence May 3, 2026, and would expire May 2, 2027.

If you wish to exercise this option to renew and continue this contract with the vendors listed below for twelve more months, please check the appropriate response, and email this form back to me.

Primary	Guardian Power Cleaning of Dallas Inc.
Secondary	Kept Companies Inc.

(●) Yes, I wish to continue the current contract with the above-mentioned vendor for the first renewal term of the contract.

Funds to support this contract will be provided by the following accounts:

532011/10000-2026/Various Cost Centers

( ) No, I do not wish to continue the current contract with the above-mentioned vendor for the following reason(s).

SIGNATURE: Joshua B. Palmer DATE: 11/3/25

Bid No. F2025077 Annual Contract for Preventative Maintenance and Cleaning of Commercial Kitchen Vent Hoods and Ceiling Registers, and Deep Cleaning Services

				Primary Vendor		*Secondary Vendor*	
				Guardian Power Cleaning of Dallas, Inc. dba Guardian Services Dallas, TX HUB - No CO-OP - Yes		*Kept Companies Inc. Fairfield, NJ HUB - No CO-OP - Yes*	
				Total Price	**$26,950.00**	*Total Price*	*$40,725.00*
Line #	Description	QTY	UOM	**Unit**	**Extended**	*Unit*	*Extended*
2	Cold Springs Jail Preventative Maintenance Visit, Two (2) Visits Per Year in January and July.						
2.1	Commercial Kitchen Oven Vent Hood 27' long – Quantity 1 Hood Manufacturer: Not Available Model/Serial#: Not Available 16 Filters per Hood x 1 Hood = 16 Filters Included	2	Price Per Visit	**$750.00**	**$ 1,500.00**	*$995.00*	*$ 1,990.00*
2.2	Commercial Kitchen Oven Vent Hood 12' long – Quantity 1 Hood Manufacturer: Not Available Model/Serial#: Not Available 7 Filters per Hood x 1 Hood = 7 Filters Included	2	Price Per Visit	**$300.00**	**$ 600.00**	*$495.00*	*$ 990.00*
2.3	Commercial Dish Vent Hood, 7' 6" long Manufacturer: Hobart Model/Serial#: Not Available No Filters	2	Price Per Visit	**$150.00**	**$ 300.00**	*$495.00*	*$ 990.00*
2.4	HVAC Registers – 11 Supply Registers Included	2	Price Per Visit	**$225.00**	**$ 450.00**	*$385.00*	*$ 770.00*
2.5	HVAC Registers – 3 Return Registers Included	2	Price Per Visit	**$75.00**	**$ 150.00**	*$105.00*	*$ 210.00*
3	Green Bay Jai Two (2) Visits Per Year in January and July.						
3.1	Commercial Kitchen Oven Vent Hood 4' 8" long – Quantity 4 Hoods Manufacturer: Master Air Model/Serial#: EA / 7327 5 Filters per Hood x 4 Hoods = 20 Filters Included	2	Price Per Visit	**$1,050.00**	**$ 2,100.00**	*$1,245.00*	*$ 2,490.00*
3.2	Commercial Kitchen Oven Vent Hood 5' 2-1/2" long – Quantity 2 Hoods Manufacturer: General Model/Serial#: DW / 7327 6 Filters per Hood x 2 Hoods = 12 Filters Included	2	Price Per Visit	**$750.00**	**$ 1,500.00**	*$745.00*	*$ 1,490.00*

Bid No. F2025077 Annual Contract for Preventative Maintenance and Cleaning of Commercial Kitchen Vent Hoods and Ceiling Registers, and Deep Cleaning Services

				Gorilla Showers Cleburne, TX HUB - No		Mr. Backflow LLC dba 1-A Fire & Domestic Testing Boyd, TX HUB - Yes	
				Total Price	$44,715.00	Total Price	$84,150.00
Line #	Description	QTY	UOM	Unit	Extended	Unit	Extended
2	Cold Springs Jail Preventative Maintenance Visit, Two (2) Visits Per Year in January and July.						
2.1	Commercial Kitchen Oven Vent Hood 27' long – Quantity 1 Hood Manufacturer: Not Available Model/Serial#: Not Available 16 Filters per Hood x 1 Hood = 16 Filters Included	2	Price Per Visit	$975.00	$ 1,950.00	$1,750.00	$ 3,500.00
2.2	Commercial Kitchen Oven Vent Hood 12' long – Quantity 1 Hood Manufacturer: Not Available Model/Serial#: Not Available 7 Filters per Hood x 1 Hood = 7 Filters Included	2	Price Per Visit	$375.00	$ 750.00	$1,000.00	$ 2,000.00
2.3	Commercial Dish Vent Hood, 7' 6" long Manufacturer: Hobart Model/Serial#: Not Available No Filters	2	Price Per Visit	$250.00	$ 500.00	$750.00	$ 1,500.00
2.4	HVAC Registers – 11 Supply Registers Included	2	Price Per Visit	$385.00	$ 770.00	$300.00	$ 600.00
2.5	HVAC Registers – 3 Return Registers Included	2	Price Per Visit	$105.00	$ 210.00	$100.00	$ 200.00
3	Green Bay Jai Two (2) Visits Per Year in January and July.						
3.1	Commercial Kitchen Oven Vent Hood 4' 8" long – Quantity 4 Hoods Manufacturer: Master Air Model/Serial#: EA / 7327 5 Filters per Hood x 4 Hoods = 20 Filters Included	2	Price Per Visit	$750.00	$ 1,500.00	$1,750.00	$ 3,500.00
3.2	Commercial Kitchen Oven Vent Hood 5' 2-1/2" long – Quantity 2 Hoods Manufacturer: General Model/Serial#: DW / 7327 6 Filters per Hood x 2 Hoods = 12 Filters Included	2	Price Per Visit	$525.00	$ 1,050.00	$1,500.00	$ 3,000.00

Bid No. F2025077 Annual Contract for Preventative Maintenance and Cleaning of Commercial Kitchen Vent Hoods and Ceiling Registers, and Deep Cleaning Services

				Primary Vendor		*Secondary Vendor*	
				Guardian Power Cleaning of Dallas, Inc. dba Guardian Services Dallas, TX HUB - No CO-OP - Yes		*Kept Companies Inc. Fairfield, NJ HUB - No CO-OP - Yes*	
				Total Price	**$26,950.00**	*Total Price*	*$40,725.00*
Line #	Description	QTY	UOM	**Unit**	**Extended**	*Unit*	*Extended*
3.3	HVAC Registers – 26 Supply Registers Included	2	Price Per Visit	**$225.00**	**$ 450.00**	*$910.00*	*$ 1,820.00*
3.4	HVAC Registers – 10 Return Registers Included	2	Price Per Visit	**$150.00**	**$ 300.00**	*$350.00*	*$ 700.00*
3.5	Clean and Sanitize Stainless Steel Wall Plates, 10' x 6' each – Quantity 22 Wall Plates Included	2	Price Per Visit	**$150.00**	**$ 300.00**	*$1,650.00*	*$ 3,300.00*
4	Lon Evans Corrections Center Preventative Maintenance Visit, Four (4) Visits Per Year in January, April, July, and October.						
4.1	Commercial Kitchen Oven Vent Hood, 26' long – Quantity 1 Hood Manufacturer: Gaylord XG Series Model/Serial#: S# GI-0811-08357006, M# X6-GBD-BDL-HP-65 18 Filters per Hood x 1 Hood = 18 Filters Included	4	Price Per Visit	**$600.00**	**$ 2,400.00**	*$995.00*	*$ 3,980.00*
4.2	Commercial Kitchen Walk-In Oven Hood, 6' long – Quantity 3 Hoods Manufacturer: Gaylord XG Series Model#: PG-ND-BD1-O-CBAX-DRJ (same for all Serial#)Serial#: GT1910 05 233, GT11110 05890, GT 11110 0587 6Filters per Hood x 3 Hoods = 9 Filters Included	4	Price Per Visit	**$675.00**	**$ 2,700.00**	*$995.00*	*$ 3,980.00*
4.3	Commercial Steam Kettle Hood, 30' long – Quantity 1 Hood Manufacturer: Gaylord XG Series Model/Serial#: S# GT-0811-08357001B, M# XG-GBD-BDL-HP-60 20 Filters per Hood x 1 Hood = 20 Filters Included	4	Price Per Visit	**$600.00**	**$ 2,400.00**	*$495.00*	*$ 1,980.00*

Bid No. F2025077 Annual Contract for Preventative Maintenance and Cleaning of Commercial Kitchen Vent Hoods and Ceiling Registers, and Deep Cleaning Services

				Gorilla Showers Cleburne, TX HUB - No		Mr. Backflow LLC dba 1-A Fire & Domestic Testing Boyd, TX HUB - Yes	
				Total Price	$44,715.00	Total Price	$84,150.00
Line #	Description	QTY	UOM	Unit	Extended	Unit	Extended
3.3	HVAC Registers – 26 Supply Registers Included	2	Price Per Visit	$910.00	$ 1,820.00	$650.00	$ 1,300.00
3.4	HVAC Registers – 10 Return Registers Included	2	Price Per Visit	$350.00	$ 700.00	$300.00	$ 600.00
3.5	Clean and Sanitize Stainless Steel Wall Plates, 10' x 6' each – Quantity 22 Wall Plates Included	2	Price Per Visit	$1,375.00	$ 2,750.00	$1,000.00	$ 2,000.00
4	Lon Evans Corrections Center Preventative Maintenance Visit, Four (4) Visits Per Year in January, April, July, and October.						
4.1	Commercial Kitchen Oven Vent Hood, 26' long – Quantity 1 Hood Manufacturer: Gaylord XG Series Model/Serial#: S# GI-0811-08357006, M# X6-GBD-BDL-HP-65 18 Filters per Hood x 1 Hood = 18 Filters Included	4	Price Per Visit	$950.00	$ 3,800.00	$2,250.00	$ 9,000.00
4.2	Commercial Kitchen Walk-In Oven Hood, 6' long – Quantity 3 Hoods Manufacturer: Gaylord XG Series Model#: PG-ND-BD1-O-CBAX-DRJ (same for all Serial#)Serial#: GT1910 05 233, GT11110 05890, GT 11110 0587 6Filters per Hood x 3 Hoods = 9 Filters Included	4	Price Per Visit	$675.00	$ 2,700.00	$1,500.00	$ 6,000.00
4.3	Commercial Steam Kettle Hood, 30' long – Quantity 1 Hood Manufacturer: Gaylord XG Series Model/Serial#: S# GT-0811-08357001B, M# XG-GBD-BDL-HP-60 20 Filters per Hood x 1 Hood = 20 Filters Included	4	Price Per Visit	$1,000.00	$ 4,000.00	$2,750.00	$ 11,000.00

Bid No. F2025077 Annual Contract for Preventative Maintenance and Cleaning of Commercial Kitchen Vent Hoods and Ceiling Registers, and Deep Cleaning Services

				Primary Vendor		*Secondary Vendor*	
				Guardian Power Cleaning of Dallas, Inc. dba Guardian Services Dallas, TX HUB - No CO-OP - Yes		*Kept Companies Inc. Fairfield, NJ HUB - No CO-OP - Yes*	
				Total Price	**$26,950.00**	*Total Price*	*$40,725.00*
Line #	Description	QTY	UOM	**Unit**	**Extended**	*Unit*	*Extended*
4.4	Commercial Tilt Kettle Hood, 30' long – Quantity 1 Hood Manufacturer: Gaylord XG Series Model/Serial#: S# GI-0811-08357003, M# XG-GBD-BDL-HP-60 20 Filters per Hood x 1 Hood = 20 Filters Included	4	Price Per Visit	**$600.00**	**$ 2,400.00**	*$495.00*	*$ 1,980.00*
4.5	HVAC Registers – 17 Ceiling Registers Included	4	Price Per Visit	**$150.00**	**$ 600.00**	*$595.00*	*$ 2,380.00*
5	Mental Health Jail Diversion Center Preventative Maintenance Visit, one (1) Visit Per Year in July.						
5.1	Oven Vent Hoods, General Oven Hood, 46 inches long – Quantity 1 Hood Manufacturer: AMEREX Corp. Model/Serial#: 12868 2 Filters per Hood x 1 Hood = 2 Filters Included	1	Price Per Visit	**$600.00**	**$ 600.00**	*$495.00*	*$ 495.00*
6	Scott D. Moore Juvenile Justice Center Preventative Maintenance Visit, Four (4) Visits Per Year in March, June, September, and December.						
6.1	Commercial Kitchen Oven Vent Hood, 14' long – Quantity 1 Hood Manufacturer: Avtec Model/Serial#: AFBI - Serial 4994A 18 Filters per Hood x 1 Hood = 18 Filters Included	4	Price Per Visit	**$450.00**	**$ 1,800.00**	*$495.00*	*$ 1,980.00*
6.2	Commercial Kitchen Dish Vent Hood, 6' long – Quantity 2 Hoods Manufacturer: Hobart Model/Serial# C44A 3 Filters per Hood x 2 Hoods = 6 Filters Included	4	Price Per Visit	**$600.00**	**$ 2,400.00**	*$745.00*	*$ 2,980.00*
6.3	HVAC Registers Kitchen: 9 Supply Registers and 3 Return Registers Included	4	Price Per Visit	**$150.00**	**$ 600.00**	*$420.00*	*$ 1,680.00*

Bid No. F2025077 Annual Contract for Preventative Maintenance and Cleaning of Commercial Kitchen Vent Hoods and Ceiling Registers, and Deep Cleaning Services

				Gorilla Showers Cleburne, TX HUB - No		Mr. Backflow LLC dba 1-A Fire & Domestic Testing Boyd, TX HUB - Yes	
				Total Price	$44,715.00	Total Price	$84,150.00
Line #	Description	QTY	UOM	Unit	Extended	Unit	Extended
4.4	Commercial Tilt Kettle Hood, 30' long – Quantity 1 Hood Manufacturer: Gaylord XG Series Model/Serial#: S# GI-0811-08357003, M# XG-GBD-BDL-HP-60 20 Filters per Hood x 1 Hood = 20 Filters Included	4	Price Per Visit	$1,000.00	$ 4,000.00	$2,750.00	$ 11,000.00
4.5	HVAC Registers – 17 Ceiling Registers Included	4	Price Per Visit	$750.00	$ 3,000.00	$450.00	$ 1,800.00
5	Mental Health Jail Diversion Center Preventative Maintenance Visit, one (1) Visit Per Year in July.						
5.1	Oven Vent Hoods, General Oven Hood, 46 inches long – Quantity 1 Hood Manufacturer: AMEREX Corp. Model/Serial#: 12868 2 Filters per Hood x 1 Hood = 2 Filters Included	1	Price Per Visit	$475.00	$ 475.00	$750.00	$ 750.00
6	Scott D. Moore Juvenile Justice Center Preventative Maintenance Visit, Four (4) Visits Per Year in March, June, September, and December.						
6.1	Commercial Kitchen Oven Vent Hood, 14' long – Quantity 1 Hood Manufacturer: Avtec Model/Serial#: AFBI - Serial 4994A 18 Filters per Hood x 1 Hood = 18 Filters Included	4	Price Per Visit	$600.00	$ 2,400.00	$1,750.00	$ 7,000.00
6.2	Commercial Kitchen Dish Vent Hood, 6' long – Quantity 2 Hoods Manufacturer: Hobart Model/Serial# C44A 3 Filters per Hood x 2 Hoods = 6 Filters Included	4	Price Per Visit	$675.00	$ 2,700.00	$1,500.00	$ 6,000.00
6.3	HVAC Registers Kitchen: 9 Supply Registers and 3 Return Registers Included	4	Price Per Visit	$420.00	$ 1,680.00	$300.00	$ 1,200.00

Bid No. F2025077 Annual Contract for Preventative Maintenance and Cleaning of Commercial Kitchen Vent Hoods and Ceiling Registers, and Deep Cleaning Services

				Primary Vendor		*Secondary Vendor*	
				Guardian Power Cleaning of Dallas, Inc. dba Guardian Services Dallas, TX HUB - No CO-OP - Yes		*Kept Companies Inc. Fairfield, NJ HUB - No CO-OP - Yes*	
				Total Price	**$26,950.00**	*Total Price*	*$40,725.00*
Line #	Description	QTY	UOM	**Unit**	**Extended**	*Unit*	*Extended*
6.4	HVAC Registers Dry Storage #1: 1 Supply Register and 1 Return Register Included	4	Price Per Visit	**$100.00**	**$ 400.00**	*$70.00*	*$ 280.00*
6.5	HVAC Registers Dry Storage #2: 2 Supply Registers Included	4	Price Per Visit	**$100.00**	**$ 400.00**	*$70.00*	*$ 280.00*
6.6	Commercial Kitchen and two (2) Stock Rooms Deep Cleaning Services - Approximate Size: 2,700 square feet.	4	Price Per Visit	**$650.00**	**$ 2,600.00**	*$995.00*	*$ 3,980.00*

Bid No. F2025077 Annual Contract for Preventative Maintenance and Cleaning of Commercial Kitchen Vent Hoods and Ceiling Registers, and Deep Cleaning Services

				Gorilla Showers Cleburne, TX HUB - No		Mr. Backflow LLC dba 1-A Fire & Domestic Testing Boyd, TX HUB - Yes	
				Total Price	$44,715.00	Total Price	$84,150.00
Line #	Description	QTY	UOM	Unit	Extended	Unit	Extended
6.4	HVAC Registers Dry Storage #1: 1 Supply Register and 1 Return Register Included	4	Price Per Visit	$70.00	$ 280.00	$150.00	$ 600.00
6.5	HVAC Registers Dry Storage #2: 2 Supply Registers Included	4	Price Per Visit	$70.00	$ 280.00	$150.00	$ 600.00
6.6	Commercial Kitchen and two (2) Stock Rooms Deep Cleaning Services - Approximate Size: 2,700 square feet.	4	Price Per Visit	$1,850.00	$ 7,400.00	$2,750.00	$ 11,000.00

Note: A no-bid response was received from Communication Concepts, GTS Technology Solutions, Inc., Johnson Construction Services, LLC, Plywood Company of Fort Worth, Inc., Sunbelt Material Handling, T.A.N. Logistics LLC, and Texas Pipeline Services.

TAKINGS IMPACT ASSESSMENT CHECKLIST

Complete this form for any county action that involves the adoption of a regulation, policy, guideline, court resolution, or order.

Project/Regulation Name: Bid No. F2025077 - Annual Contract for Preventative Maintenance and Cleaning of Commercial Kitchen Vent Hoods, and Ceiling Registers, and Deep Cleaning Services – Facilities Management – Various Vendors – Exercise First Option for Renewal – Same Firm Fixed Prices

County Department: PURCHASING

Contact Person: Melissa Lee, C.P.M., A.P.P.

Phone Number for Contact Person: (817) 884-3245

Type of TIA Performed: (SHORT TIA) or FULL TIA. Circle one after answering the questions in Sections II and III below.

****

I. Stated Purpose

Attach to this checklist an explanation of the purpose of the regulation, policy, guideline, court resolution or order.

****

Note: The remainder of this Takings Impact Assessment Checklist should be completed in consultation with the Criminal District Attorney's Office.

II. Potential Effect on Private Real Property

1. Does the county action require a physical invasion, occupation or dedication of real property?

   Yes _____ No √

2. Does the county action limit or restrict a real property right, even partially or temporarily?

   Yes _____ No √

If you answered yes to either question, go to Section III. If you answered no to both, STOP HERE and circle SHORT TIA at the top of the form.

****

TARRANT COUNTY
COMMISSIONERS COURT COMMUNICATION

Court Date: December 9, 2025	**Court Order #:**	**Page:** 1 of 16
Department: Purchasing	**Prepared By:** Julian Cano	**Approved By:** Christopher Lax, CPSM, CPSD, CPCP

SUBJECT:

Bid No. F2025015 - Annual Contract for Various Concrete Services - Countywide - Reliable Paving, Inc.

***** CONSENT AGENDA *****

COMMISSIONERS COURT ACTION REQUESTED

It is requested that the Commissioners Court accept payment bonds for Bid No. F2025015, Annual Contract for Various Concrete Services, for Precinct 1, from Reliable Paving, Inc. on the following proposals:

Proposal #93059	$56,000.00
Proposal #93058	$27,500.00

BACKGROUND

On December 3, 2024, the Commissioners Court, through Court Order #144405, awarded Bid No. F2025015, Annual Contract for Various Concrete Services, Countywide, to Reliable Paving, Inc.

On November 11, 2025, the Commissioners Court, through Court Order #146272, approved the first renewal option.

Proposal #93058, dated October 29, 2025, is to build headwalls for 36” reinforced concrete pipe at Rocky Creek Road, Crowley, Texas.

Proposal #93059, dated October 29, 2025, is to build headwalls C & G and Paved Island at intersection between Rocky Creek and St. Francis Village, Crowley, Texas.

The proposals meet all specifications and are acceptable to Precinct 1. Reliable Paving, Inc. will provide all labor, materials, and equipment for these projects.

Payment bonds are part of the requirement for the contractor to begin work. The bonds are required solely for the protection of all claimants supplying labor or furnishing materials used on these projects.

FISCAL IMPACT

Funding in the amount of $83,500.00 is available in account 26100-2026 Road and Bridge/6110300000 Precinct 1 Maintenance/558091 Cement and Concrete.

Attachments

Backup - 93058 & 93059 - PB.pdf

RELIABLE
RETAIL | COMMERCIAL | INDUSTRIAL | SELF STORAGE | PAVING

1903 N. Peyco · Arlington, Texas 76001
Phone (817) 467-0779 · FAX (817) 467-9148

Proposal Number: 93059
Proposal Date: Oct 29, 2025
Page: 1

Tarrant County Precinct # 1
800 E. Crowley Rendon Road
Burleson, TX 76028

Doug Kelly - 817 371-0419
Headwalls C & G and Paved Island
Int Rocky Creek & St Francis Village
Crowley, TX

Description	Amount
pricing Based on Bid No. F2025015, Annual Contract for Various Concrete Services	
Item 2.2 - Headwalls, 4 of Single Barrell for 36" Pipes @ $ 8500.00 / EA	34,000.00
Item 5.1 - Unit Price for Concrete for 8' x 6' Wingwall and footing to connect two headwalls. 3 CY @ $1600.00 / CY	4,800.00
Item 5.3 - Labor Rates normal hours for Wingwall. 4 workers for 1.5 Days. 60 Hrs at $70.00 / Hr	4,200.00
Item 4.1 - Curb & Gutter. 66 LF @ $90.00 / LF	5,940.00
Item 4.5 - 560 SF of 6" 3600 Psi Concrete Island poured on top of New Asphalt Paving, Incl Round off Outside Top corner. @ $11.00 / SF	6,160.00
Cost of Bond if required	900.00
Excludes cost of Permits or Testing	
No sales Tax charged on Tarrant County Projects	
Tarrant County to provide Traffic Control	
Excludes Backfill and reconstruction of road shoulder	
Subtotal	56,000.00
Sales Tax	
TOTAL PROPOSAL AMOUNT	**56,000.00**

I. GENERAL TERMS

Unless Reliable and the customer have expressly agreed that a lump sum fixed price is to be paid, the customer understands that the above quoted sum and quantities are estimated only. If Reliable and the customer have not agreed to such a l customer agrees to pay Reliable based upon stated prices and actual work performed.
Payment is due immediately upon receipt of Reliable's invoice. If Reliable has agreed to the payment of progress draws, then these payments shall be made weekly based on the percentage of work completed by Reliable the previous week.
If the work performed by Reliable continues for more than one month, then the customer agrees to make payments on or before the 10th day of the month, based on the work performed in the prior month. Such payments shall be based on the e
All payments to Reliable Paving, Inc shall be made to 1903 N. Peyco Drive Arlington, TX 76001.
If the customer fails to remit payment by the due date, interest at the maximum rate allowed by law will accrue on the unpaid balance until the outstanding balance and interest are received by Reliable.
If Reliable is required to engage an attorney to collect amounts due hereunder, the customer shall be responsible for reasonable attorney's fees and the cost of collection.
The cost of City Permits (if applicable) are not included in the total cost and will be paid by the customer.

II.RESPONSIBILITES

Reliable Paving, Inc is dedicated to serving you, the customer. Accordingly, all work is to be completed in a workmanlike manner according to standard practices. However, there are certain situations for which Reliable will not be responsible. Reliable will not be responsible for any delays in the completion of work due to labor strikes, inclement weather, acts of God, or any other events beyond the control of Reliable. Reliable is not responsible for the consequences of soil expansion o informing Reliable of any conditions which might affect the work and Reliable shall not be liable for the consequences of undisclosed and/or unknown conditions.
The customer is responsible for the provision and maintenance of any necessary insurance.
The customer shall be responsible for locating, clearly identifying, and marking all buried utility lines and structures prior to Reliable beginning work. If the customer does clearly mark and identify all utility lines and structures, and Reliable damag assume the responsibility for any repair costs associated with fixing the damages. Through the acceptance of this proposal, the customer agrees to indemnify and to hold Reliable harmless for all claims, including reasonable attorney's fees incurr damages to any utility line or structure not clearly marked by the customer. Please note that the State of Texas provides free line location services. This is available by calling 1-877-778-8111 or visiting www.texas811.org <http://www.texas811.o made at least 72 hours prior to any excavation.
Waiver of Consumer Rights: By executing this contract, the customer agrees to waive his or her rights under the Deceptive Trade Practices-Consumer Protection Act, Section4. et seq., of the Texas Business & Commerce code.

III. COMPLETE AGREEMENT

Upon acceptance of this contract, Reliable and the customer agree and understand that this contract represents the full and complete agreement between the parties, including all terms and conditions set forth herein, and that no oral agreement supplement this contract in any way.

ACCEPTED, and ,made a part pf this agreement, on this date, the _____day of _____, 20____.

_____

_____

Reliable Paving, Inc dba Reliable Commercial Construction, signed by Steven Lonsinger, agent of
Note: This proposal may be withdrawn by us if not acceptec within 15 days.


Untitled Map
Write a description for your map.
Legend
Old Granbury Rd & St Francis Village Rd
Shoreline Boat, RV and Self Storage
St Francis Village Rd
Old Granbury Rd & St Francis Village Rd
Old Granbury
Shoreline Boat, RV and Self Storage
Google Earth
Image Landsat / Copernicus
N
300 ft

S056703

AIA® Document A312™ – 2010

Payment Bond

CONTRACTOR:
(Name, legal status and address)
Reliable Paving, Inc.
1903 N Peyco Dr.
Arlington, TX 76001

SURETY:
(Name, legal status and principal place of business)
Employers Mutual Casualty Company/
Union Insurance Company of Providence
717 Mulberry Street
Des Moines, IA 50309

OWNER:
(Name, legal status and address)
Tarrant County Precinct #1
800 E. Crowley Rendon Road
Burleson, TX 76028

CONSTRUCTION CONTRACT
Date:
Amount: $ 56,000.00
Description:
(Name and location)
Headwalls C & G and Paved Island
Int Rocky Creek & St Francis Village
Crowley, TX

BOND
Date: 11/06/2025
(Not earlier than Construction Contract Date)

Amount: $ 56,000.00
Modifications to this Bond: [✓] None [ ] See Section 18

ADDITIONS AND DELETIONS:
The author of this document has added information needed for its completion. The author may also have revised the text of the original AIA standard form. An *Additions and Deletions Report* that notes added information as well as revisions to the standard form text is available from the author and should be reviewed. A vertical line in the left margin of this document indicates where the author has added necessary information and where the author has added to or deleted from the original AIA text.

This document has important legal consequences. Consultation with an attorney is encouraged with respect to its completion or modification.

Any singular reference to Contractor, Surety, Owner or other party shall be considered plural where applicable.

CONTRACTOR AS PRINCIPAL	SURETY
Company: *(Corporate Seal)* Reliable Paving, Inc.	Company: *(Corporate Seal)* Employers Mutual Casualty Company/ Union Insurance Company of Providence
Signature:	Signature: Sam Sealer
Name and Title: CEO	Name and Title: Sam Sealer, Attorney in Fact

(Any additional signatures appear on the last page of this Payment Bond.)

(FOR INFORMATION ONLY — Name, address and telephone)

AGENT or BROKER:
SBG Bonding
4020 N MacArthur Blvd
Suite 122
Irving, Texas 75038

OWNER'S REPRESENTATIVE:
(Architect, Engineer or other party:)

Init.
AIA Document A312™ – 2010 Payment Bond. The American Institute of Architects. All rights reserved. The "American Institute of Architects," "AIA," the AIA Logo, and "AIA Contract Documents" are registered trademarks and may not be used without permission

User Notes:

(2004252745)

§ 1 The Contractor and Surety, jointly and severally, bind themselves, their heirs, executors, administrators, successors and assigns to the Owner to pay for labor, materials and equipment furnished for use in the performance of the Construction Contract, which is incorporated herein by reference, subject to the following terms.

§ 2 If the Contractor promptly makes payment of all sums due to Claimants, and defends, indemnifies and holds harmless the Owner from claims, demands, liens or suits by any person or entity seeking payment for labor, materials or equipment furnished for use in the performance of the Construction Contract, then the Surety and the Contractor shall have no obligation under this Bond.

§ 3 If there is no Owner Default under the Construction Contract, the Surety's obligation to the Owner under this Bond shall arise after the Owner has promptly notified the Contractor and the Surety (at the address described in Section 13) of claims, demands, liens or suits against the Owner or the Owner's property by any person or entity seeking payment for labor, materials or equipment furnished for use in the performance of the Construction Contract and tendered defense of such claims, demands, liens or suits to the Contractor and the Surety.

§ 4 When the Owner has satisfied the conditions in Section 3, the Surety shall promptly and at the Surety's expense defend, indemnify and hold harmless the Owner against a duly tendered claim, demand, lien or suit.

§ 5 The Surety's obligations to a Claimant under this Bond shall arise after the following:

§ 5.1 Claimants, who do not have a direct contract with the Contractor,

.1 have furnished a written notice of non-payment to the Contractor, stating with substantial accuracy the amount claimed and the name of the party to whom the materials were, or equipment was, furnished or supplied or for whom the labor was done or performed, within ninety (90) days after having last performed labor or last furnished materials or equipment included in the Claim; and

.2 have sent a Claim to the Surety (at the address described in Section 13).

§ 5.2 Claimants, who are employed by or have a direct contract with the Contractor, have sent a Claim to the Surety (at the address described in Section 13).

§ 6 If a notice of non-payment required by Section 5.1.1 is given by the Owner to the Contractor, that is sufficient to satisfy a Claimant's obligation to furnish a written notice of non-payment under Section 5.1.1.

§ 7 When a Claimant has satisfied the conditions of Sections 5.1 or 5.2, whichever is applicable, the Surety shall promptly and at the Surety's expense take the following actions:

§ 7.1 Send an answer to the Claimant, with a copy to the Owner, within sixty (60) days after receipt of the Claim, stating the amounts that are undisputed and the basis for challenging any amounts that are disputed; and

§ 7.2 Pay or arrange for payment of any undisputed amounts.

§ 7.3 The Surety's failure to discharge its obligations under Section 7.1 or Section 7.2 shall not be deemed to constitute a waiver of defenses the Surety or Contractor may have or acquire as to a Claim, except as to undisputed amounts for which the Surety and Claimant have reached agreement. If, however, the Surety fails to discharge its obligations under Section 7.1 or Section 7.2, the Surety shall indemnify the Claimant for the reasonable attorney's fees the Claimant incurs thereafter to recover any sums found to be due and owing to the Claimant.

§ 8 The Surety's total obligation shall not exceed the amount of this Bond, plus the amount of reasonable attorney's fees provided under Section 7.3, and the amount of this Bond shall be credited for any payments made in good faith by the Surety.

§ 9 Amounts owed by the Owner to the Contractor under the Construction Contract shall be used for the performance of the Construction Contract and to satisfy claims, if any, under any construction performance bond. By the Contractor furnishing and the Owner accepting this Bond, they agree that all funds earned by the Contractor in the performance of the Construction Contract are dedicated to satisfy obligations of the Contractor and Surety under this Bond, subject to the Owner's priority to use the funds for the completion of the work.

§ 10 The Surety shall not be liable to the Owner, Claimants or others for obligations of the Contractor that are unrelated to the Construction Contract. The Owner shall not be liable for the payment of any costs or expenses of any Claimant under this Bond, and shall have under this Bond no obligation to make payments to, or give notice on behalf of, Claimants or otherwise have any obligations to Claimants under this Bond.

§ 11 The Surety hereby waives notice of any change, including changes of time, to the Construction Contract or to related subcontracts, purchase orders and other obligations.

§ 12 No suit or action shall be commenced by a Claimant under this Bond other than in a court of competent jurisdiction in the state in which the project that is the subject of the Construction Contract is located or after the expiration of one year from the date (1) on which the Claimant sent a Claim to the Surety pursuant to Section 5.1.2 or 5.2, or (2) on which the last labor or service was performed by anyone or the last materials or equipment were furnished by anyone under the Construction Contract, whichever of (1) or (2) first occurs. If the provisions of this Paragraph are void or prohibited by law, the minimum period of limitation available to sureties as a defense in the jurisdiction of the suit shall be applicable.

§ 13 Notice and Claims to the Surety, the Owner or the Contractor shall be mailed or delivered to the address shown on the page on which their signature appears. Actual receipt of notice or Claims, however accomplished, shall be sufficient compliance as of the date received.

§ 14 When this Bond has been furnished to comply with a statutory or other legal requirement in the location where the construction was to be performed, any provision in this Bond conflicting with said statutory or legal requirement shall be deemed deleted herefrom and provisions conforming to such statutory or other legal requirement shall be deemed incorporated herein. When so furnished, the intent is that this Bond shall be construed as a statutory bond and not as a common law bond.

§ 15 Upon request by any person or entity appearing to be a potential beneficiary of this Bond, the Contractor and Owner shall promptly furnish a copy of this Bond or shall permit a copy to be made.

§ 16 Definitions

§ 16.1 **Claim.** A written statement by the Claimant including at a minimum:

.1 the name of the Claimant;
.2 the name of the person for whom the labor was done, or materials or equipment furnished;
.3 a copy of the agreement or purchase order pursuant to which labor, materials or equipment was furnished for use in the performance of the Construction Contract;
.4 a brief description of the labor, materials or equipment furnished;
.5 the date on which the Claimant last performed labor or last furnished materials or equipment for use in the performance of the Construction Contract;
.6 the total amount earned by the Claimant for labor, materials or equipment furnished as of the date of the Claim;
.7 the total amount of previous payments received by the Claimant; and
.8 the total amount due and unpaid to the Claimant for labor, materials or equipment furnished as of the date of the Claim.

§ 16.2 **Claimant.** An individual or entity having a direct contract with the Contractor or with a subcontractor of the Contractor to furnish labor, materials or equipment for use in the performance of the Construction Contract. The term Claimant also includes any individual or entity that has rightfully asserted a claim under an applicable mechanic's lien or similar statute against the real property upon which the Project is located. The intent of this Bond shall be to include without limitation in the terms "labor, materials or equipment" that part of water, gas, power, light, heat, oil, gasoline, telephone service or rental equipment used in the Construction Contract, architectural and engineering services required for performance of the work of the Contractor and the Contractor's subcontractors, and all other items for which a mechanic's lien may be asserted in the jurisdiction where the labor, materials or equipment were furnished.

§ 16.3 **Construction Contract.** The agreement between the Owner and Contractor identified on the cover page, including all Contract Documents and all changes made to the agreement and the Contract Documents.

Init.

AIA Document A312™ – 2010 Payment Bond. The American Institute of Architects. All rights reserved. The "American Institute of Architects," "AIA," the AIA Logo, and "AIA Contract Documents" are registered trademarks and may not be used without permission.

User Notes: (2004252745)

§ 16.4 Owner Default. Failure of the Owner, which has not been remedied or waived, to pay the Contractor as required under the Construction Contract or to perform and complete or comply with the other material terms of the Construction Contract.

§ 16.5 Contract Documents. All the documents that comprise the agreement between the Owner and Contractor.

§ 17 If this Bond is issued for an agreement between a Contractor and subcontractor, the term Contractor in this Bond shall be deemed to be Subcontractor and the term Owner shall be deemed to be Contractor.

§ 18 Modifications to this bond are as follows:

(Space is provided below for additional signatures of added parties, other than those appearing on the cover page.)

CONTRACTOR AS PRINCIPAL		**SURETY**	
Company:	*(Corporate Seal)*	Company:	*(Corporate Seal)*
Signature:		Signature:	
Name and Title:		Name and Title:	
Address:		Address:	

AIA Document A312™ – 2010 Payment Bond. The American Institute of Architects. All rights reserved. The "American Institute of Architects," "AIA," the AIA Logo, and "AIA Contract Documents" are registered trademarks and may not be used without permission

emc INSURANCE

P.O. Box 712 • Des Moines, Iowa 50306-0712

POWER OF ATTORNEY APPOINTING INDIVIDUAL ATTORNEY-IN-FACT

KNOW ALL MEN BY THESE PRESENTS, that:

1. **Employers Mutual Casualty Company, an Iowa Corporation**
2. **EMCASCO Insurance Company, an Iowa Corporation**
3. **Union Insurance Company of Providence, an Iowa Corporation**
4. **Illinois EMCASCO Insurance Company, an Iowa Corporation**
5. **Dakota Fire Insurance Company, a North Dakota Corporation**
6. **EMC Property & Casualty Company, an Iowa Corporation**

hereinafter referred to severally as "Company" and collectively as "Companies", each does, by these presents, make, constitute and appoint:

Sam Sealer

its true and lawful attorney-in-fact, with full power and authority conferred to sign, seal, and execute the following Surety Bond(s):

Surety Bond Number	Principal:	Obligee:
S056703	RELIABLE PAVING, INC	

and to bind each Company thereby as fully and to the same extent as if such instruments were signed by the duly authorized officers of each such Company, and all of the acts of said attorney pursuant to the authority hereby given are hereby ratified and confirmed.

AUTHORITY FOR POWER OF ATTORNEY

This Power-of-Attorney is made and executed pursuant to and by the authority of the following resolution of the Boards of Directors of each of the Companies at the first regularly scheduled meeting of each company duly called and held in 1999:

RESOLVED: The President and Chief Executive Officer, any Vice President, the Treasurer and the Secretary of Employers Mutual Casualty Company shall have power and authority to (1) appoint attorneys-in-fact and authorize them to execute on behalf of each Company and attach the seal of the Company thereto, bonds and undertakings, recognizances, contracts of indemnity and other writings obligatory in the nature thereof; and (2) to remove any such attorney-in-fact at any time and revoke the power and authority given to him or her. Attorneys-in-fact shall have power and authority, subject to the terms and limitations of the power-of-attorney issued to them, to execute and deliver on behalf of the Company, and to attach the seal of the Company thereto, bonds and undertakings, recognizances, contracts of indemnity and other writings obligatory in the nature thereof, and any such instrument executed by any such attorney-in-fact shall be fully and in all respects binding upon the Company. Certification as to the validity of any power-of-attorney authorized herein made by an officer of Employers Mutual Casualty Company shall be fully and in all respects binding upon this Company. The facsimile or mechanically reproduced signature of such officer, whether made heretofore or hereafter, wherever appearing upon a certified copy of any power-of-attorney of the Company, shall be valid and binding upon the Company with the same force and effect as though manually affixed.

IN WITNESS THEREOF, the Companies have caused these presents to be signed for each by their officers as shown, and the Corporate seals to be hereto affixed this 17th day of September, 2025.

Seals

SEAL 1863 IOWA 1953 IOWA SEAL SEAL SEAL

AMY DANIEL
Commission Number 866839
My Commission Expires
August 13, 2028

Scott R. Jean, President & CEO
of Company 1; Chairman, President
& CEO of Companies 2, 3, 4, 5 & 6

Todd Strother, Executive Vice President
Chief Legal Officer & Secretary of
Companies 1, 2, 3, 4, 5 & 6

On this 17th day of September, 2025 before me a Notary Public in and for the State of Iowa, personally appeared Scott R. Jean and Todd Strother, who, being by me duly sworn, did say that they are, and are known to me to be the CEO, Chairman, President, Executive Vice President, Chief Legal Officer and/or Secretary, respectively, of each of the Companies above; that the seals affixed to this instrument are the seals of said corporations; that said instrument was signed and sealed on behalf of each of the Companies by authority of their respective Boards of Directors; and that the said Scott R. Jean and Todd Strother, as such officers, acknowledged the execution of said instrument to be their voluntary act and deed, and the voluntary act and deed of each of the Companies.

My Commission Expires August 13, 2028.

Notary Public in and for the State of Iowa

CERTIFICATE

I, Ryan J. Springer, Vice President of the Companies, do hereby certify that the foregoing resolution of the Boards of Directors by each of the Companies, and this Power of Attorney issued pursuant thereto on 17th day of September, 2025 are true and correct and are still in full force and effect.

In Testimony Whereof I have subscribed my name and affixed the facsimile seal of each Company this 6th day of November, 2025.

Vice President

"For verification of the authenticity of the Power of Attorney you may call (515) 345-7548."

RELIABLE
RETAIL | COMMERCIAL | INDUSTRIAL | SELF STORAGE | PAVING

1903 N. Peyco · Arlington, Texas 76001
Phone (817) 467-0779 · FAX (817) 467-9148

Proposal Number: 93058
Proposal Date: Oct 29, 2025
Page: 1

Tarrant County Precinct # 1
800 E. Crowley Rendon Road
Burleson, TX 76028

Doug Kelly - 817 371-0419
Headwalls for Double 36" RCP
Rocky Creek Road
Crowley, TX

Description	Amount
pricing Based on Bid No. F2025015, Annual Contract for Various Concrete Services	
Item 2.5 - Headwall, 2 of 2 Barrell for 36" Pipes @ $ 13500.00 / EA	27,000.00
Cost of Bond if required	500.00
Excludes cost of Permits or Testing	
No sales Tax charged on Tarrant County Projects	
Tarrant County to provide Traffic Control	
Excludes Backfill and reconstruction of road shoulder	
Subtotal	27,500.00
Sales Tax	
TOTAL PROPOSAL AMOUNT	**27,500.00**

I. GENERAL TERMS

Unless Reliable and the customer have expressly agreed that a lump sum fixed price is to be paid, the customer understands that the above quoted sum and quantities are estimated only. If Reliable and the customer have not agreed to such a l customer agrees to pay Reliable based upon stated prices and actual work performed.
Payment is due immediately upon receipt of Reliable's invoice. If Reliable has agreed to the payment of progress draws, then these payments shall be made weekly based on the percentage of work completed by Reliable the previous week.
If the work performed by Reliable continues for more than one month, then the customer agrees to make payments on or before the 10th day of the month, based on the work performed in the prior month. Such payments shall be based on the e
All payments to Reliable Paving, Inc shall be made to 1903 N. Peyco Drive Arlington, TX 76001.
If the customer fails to remit payment by the due date, interest at the maximum rate allowed by law will accrue on the unpaid balance until the outstanding balance and interest are received by Reliable.
If Reliable is required to engage an attorney to collect amounts due hereunder, the customer shall be responsible for reasonable attorney's fees and the cost of collection.
The cost of City Permits (if applicable) are not included in the total cost and will be paid by the customer.

II.RESPONSIBILITES

Reliable Paving, Inc is dedicated to serving you, the customer. Accordingly, all work is to be completed in a workmanlike manner according to standard practices. However, there are certain situations for which Reliable will not be responsible.
Reliable will not be responsible for any delays in the completion of work due to labor strikes, inclement weather, acts of God, or any other events beyond the control of Reliable. Reliable is not responsible for the consequences of soil expansion o informing Reliable of any conditions which might affect the work and Reliable shall not be liable for the consequences of undisclosed and/or unknown conditions.
The customer is responsible for the provision and maintenance of any necessary insurance.
The customer shall be responsible for locating, clearly identifying, and marking all buried utility lines and structures prior to Reliable beginning work. If the customer does clearly mark and identify all utility lines and structures, and Reliable damag assume the responsibility for any repair costs associated with fixing the damages. Through the acceptance of this proposal, the customer agrees to indemnify and to hold Reliable harmless for all claims, including reasonable attorney's fees incurr damages to any utility line or structure not clearly marked by the customer. Please note that the State of Texas provides free line location services. This is available by calling 1-877-778-8111 or visiting www.texas811.org <http://www.texas811.o made at least 72 hours prior to any excavation.
Waiver of Consumer Rights: By executing this contract, the customer agrees to waive his or her rights under the Deceptive Trade Practices-Consumer Protection Act, Section4. et seq., of the Texas Business & Commerce code.

III. COMPLETE AGREEMENT

Upon acceptance of this contract, Reliable and the customer agree and understand that this contract represents the full and complete agreement between the parties, including all terms and conditions set forth herein, and that no oral agreement supplement this contract in anyway.

ACCEPTED, and ,made a part pf this agreement, on this date, the _____day of _____, 20____.

_____

_____

Reliable Paving, inc dba Reliable Commercial Construction, signed by _____

Note: This proposal may be withdrawn by us if not accepted within 15 days.


Untitled Map
Rocky Creek Park Road
Legend
St Francis Village Rd
Rocky Creek Park Rd & Old Granbury Rd
Old Granbury Rd
Shoreline Boat, RV and Self Storage
oh so "delicious" kitchen
College Sta Rd
Deadwood Tr
Bobtail Ln
Union Pacific Dr
Skyrocket Dr
Kansas Pacific Dr
Cattle Car
Night Owl
Crossbuck Dr
College Sta Rd
Great North
Trinity Trak Dr
Orange Prt
Rocky Creek Park Rd
Double 36" RCP
Google Earth
Image Landsat / Copernicus
N
1000 ft

S056704

AIA® Document A312™ – 2010

Payment Bond

CONTRACTOR:
(Name, legal status and address)
Reliable Paving, Inc.
1903 N Peyco Dr.
Arlington, TX 76001

SURETY:
(Name, legal status and principal place of business)
Employers Mutual Casualty Company/
Union Insurance Company of Providence
717 Mulberry Street
Des Moines, IA 50309

OWNER:
(Name, legal status and address)
Tarrant County Precinct #1
800 E. Crowley Rendon Road
Burleson, TX 76028

CONSTRUCTION CONTRACT
Date:
Amount: $ 27,500.00
Description:
(Name and location)
Headwalls for Double 36" RCP
Rocky Creek Road
Crowley, TX

BOND
Date: 11/06/2025
(Not earlier than Construction Contract Date)

Amount: $ 27,500.00
Modifications to this Bond: [✓] None [ ] See Section 18

ADDITIONS AND DELETIONS:
The author of this document has added information needed for its completion. The author may also have revised the text of the original AIA standard form. An *Additions and Deletions Report* that notes added information as well as revisions to the standard form text is available from the author and should be reviewed. A vertical line in the left margin of this document indicates where the author has added necessary information and where the author has added to or deleted from the original AIA text.

This document has important legal consequences. Consultation with an attorney is encouraged with respect to its completion or modification.

Any singular reference to Contractor, Surety, Owner or other party shall be considered plural where applicable.

CONTRACTOR AS PRINCIPAL	SURETY
Company: *(Corporate Seal)* Reliable Paving, Inc.	Company: *(Corporate Seal)* Employers Mutual Casualty Company/ Union Insurance Company of Providence
Signature:	Signature: Sam Sealer
Name and Title: CH Lone CEO	Name and Title: Sam Sealer, Attorney in Fact

(Any additional signatures appear on the last page of this Payment Bond.)

(FOR INFORMATION ONLY — Name, address and telephone)

AGENT or BROKER:
SBG Bonding
4020 N MacArthur Blvd
Suite 122
Irving, Texas 75038

OWNER'S REPRESENTATIVE:
(Architect, Engineer or other party:)

AIA Document A312™ – 2010 Payment Bond. The American Institute of Architects. All rights reserved. The "American Institute of Architects," "AIA," the AIA Logo, and "AIA Contract Documents" are registered trademarks and may not be used without permission.

Init.

User Notes: (2004252745)

§ 1 The Contractor and Surety, jointly and severally, bind themselves, their heirs, executors, administrators, successors and assigns to the Owner to pay for labor, materials and equipment furnished for use in the performance of the Construction Contract, which is incorporated herein by reference, subject to the following terms.

§ 2 If the Contractor promptly makes payment of all sums due to Claimants, and defends, indemnifies and holds harmless the Owner from claims, demands, liens or suits by any person or entity seeking payment for labor, materials or equipment furnished for use in the performance of the Construction Contract, then the Surety and the Contractor shall have no obligation under this Bond.

§ 3 If there is no Owner Default under the Construction Contract, the Surety's obligation to the Owner under this Bond shall arise after the Owner has promptly notified the Contractor and the Surety (at the address described in Section 13) of claims, demands, liens or suits against the Owner or the Owner's property by any person or entity seeking payment for labor, materials or equipment furnished for use in the performance of the Construction Contract and tendered defense of such claims, demands, liens or suits to the Contractor and the Surety.

§ 4 When the Owner has satisfied the conditions in Section 3, the Surety shall promptly and at the Surety's expense defend, indemnify and hold harmless the Owner against a duly tendered claim, demand, lien or suit.

§ 5 The Surety's obligations to a Claimant under this Bond shall arise after the following:

§ 5.1 Claimants, who do not have a direct contract with the Contractor,

.1 have furnished a written notice of non-payment to the Contractor, stating with substantial accuracy the amount claimed and the name of the party to whom the materials were, or equipment was, furnished or supplied or for whom the labor was done or performed, within ninety (90) days after having last performed labor or last furnished materials or equipment included in the Claim; and

.2 have sent a Claim to the Surety (at the address described in Section 13).

§ 5.2 Claimants, who are employed by or have a direct contract with the Contractor, have sent a Claim to the Surety (at the address described in Section 13).

§ 6 If a notice of non-payment required by Section 5.1.1 is given by the Owner to the Contractor, that is sufficient to satisfy a Claimant's obligation to furnish a written notice of non-payment under Section 5.1.1.

§ 7 When a Claimant has satisfied the conditions of Sections 5.1 or 5.2, whichever is applicable, the Surety shall promptly and at the Surety's expense take the following actions:

§ 7.1 Send an answer to the Claimant, with a copy to the Owner, within sixty (60) days after receipt of the Claim, stating the amounts that are undisputed and the basis for challenging any amounts that are disputed; and

§ 7.2 Pay or arrange for payment of any undisputed amounts.

§ 7.3 The Surety's failure to discharge its obligations under Section 7.1 or Section 7.2 shall not be deemed to constitute a waiver of defenses the Surety or Contractor may have or acquire as to a Claim, except as to undisputed amounts for which the Surety and Claimant have reached agreement. If, however, the Surety fails to discharge its obligations under Section 7.1 or Section 7.2, the Surety shall indemnify the Claimant for the reasonable attorney's fees the Claimant incurs thereafter to recover any sums found to be due and owing to the Claimant.

§ 8 The Surety's total obligation shall not exceed the amount of this Bond, plus the amount of reasonable attorney's fees provided under Section 7.3, and the amount of this Bond shall be credited for any payments made in good faith by the Surety.

§ 9 Amounts owed by the Owner to the Contractor under the Construction Contract shall be used for the performance of the Construction Contract and to satisfy claims, if any, under any construction performance bond. By the Contractor furnishing and the Owner accepting this Bond, they agree that all funds earned by the Contractor in the performance of the Construction Contract are dedicated to satisfy obligations of the Contractor and Surety under this Bond, subject to the Owner's priority to use the funds for the completion of the work.

§ 10 The Surety shall not be liable to the Owner, Claimants or others for obligations of the Contractor that are unrelated to the Construction Contract. The Owner shall not be liable for the payment of any costs or expenses of any Claimant under this Bond, and shall have under this Bond no obligation to make payments to, or give notice on behalf of, Claimants or otherwise have any obligations to Claimants under this Bond.

§ 11 The Surety hereby waives notice of any change, including changes of time, to the Construction Contract or to related subcontracts, purchase orders and other obligations.

§ 12 No suit or action shall be commenced by a Claimant under this Bond other than in a court of competent jurisdiction in the state in which the project that is the subject of the Construction Contract is located or after the expiration of one year from the date (1) on which the Claimant sent a Claim to the Surety pursuant to Section 5.1.2 or 5.2, or (2) on which the last labor or service was performed by anyone or the last materials or equipment were furnished by anyone under the Construction Contract, whichever of (1) or (2) first occurs. If the provisions of this Paragraph are void or prohibited by law, the minimum period of limitation available to sureties as a defense in the jurisdiction of the suit shall be applicable.

§ 13 Notice and Claims to the Surety, the Owner or the Contractor shall be mailed or delivered to the address shown on the page on which their signature appears. Actual receipt of notice or Claims, however accomplished, shall be sufficient compliance as of the date received.

§ 14 When this Bond has been furnished to comply with a statutory or other legal requirement in the location where the construction was to be performed, any provision in this Bond conflicting with said statutory or legal requirement shall be deemed deleted herefrom and provisions conforming to such statutory or other legal requirement shall be deemed incorporated herein. When so furnished, the intent is that this Bond shall be construed as a statutory bond and not as a common law bond.

§ 15 Upon request by any person or entity appearing to be a potential beneficiary of this Bond, the Contractor and Owner shall promptly furnish a copy of this Bond or shall permit a copy to be made.

§ 16 Definitions

§ 16.1 **Claim.** A written statement by the Claimant including at a minimum:

.1 the name of the Claimant;
.2 the name of the person for whom the labor was done, or materials or equipment furnished;
.3 a copy of the agreement or purchase order pursuant to which labor, materials or equipment was furnished for use in the performance of the Construction Contract;
.4 a brief description of the labor, materials or equipment furnished;
.5 the date on which the Claimant last performed labor or last furnished materials or equipment for use in the performance of the Construction Contract;
.6 the total amount earned by the Claimant for labor, materials or equipment furnished as of the date of the Claim;
.7 the total amount of previous payments received by the Claimant; and
.8 the total amount due and unpaid to the Claimant for labor, materials or equipment furnished as of the date of the Claim.

§ 16.2 **Claimant.** An individual or entity having a direct contract with the Contractor or with a subcontractor of the Contractor to furnish labor, materials or equipment for use in the performance of the Construction Contract. The term Claimant also includes any individual or entity that has rightfully asserted a claim under an applicable mechanic's lien or similar statute against the real property upon which the Project is located. The intent of this Bond shall be to include without limitation in the terms "labor, materials or equipment" that part of water, gas, power, light, heat, oil, gasoline, telephone service or rental equipment used in the Construction Contract, architectural and engineering services required for performance of the work of the Contractor and the Contractor's subcontractors, and all other items for which a mechanic's lien may be asserted in the jurisdiction where the labor, materials or equipment were furnished.

§ 16.3 **Construction Contract.** The agreement between the Owner and Contractor identified on the cover page, including all Contract Documents and all changes made to the agreement and the Contract Documents.

§ 16.4 Owner Default. Failure of the Owner, which has not been remedied or waived, to pay the Contractor as required under the Construction Contract or to perform and complete or comply with the other material terms of the Construction Contract.

§ 16.5 Contract Documents. All the documents that comprise the agreement between the Owner and Contractor.

§ 17 If this Bond is issued for an agreement between a Contractor and subcontractor, the term Contractor in this Bond shall be deemed to be Subcontractor and the term Owner shall be deemed to be Contractor.

§ 18 Modifications to this bond are as follows:

(Space is provided below for additional signatures of added parties, other than those appearing on the cover page.)

CONTRACTOR AS PRINCIPAL		**SURETY**	
Company:	*(Corporate Seal)*	Company:	*(Corporate Seal)*
Signature:		Signature:	
Name and Title:		Name and Title:	
Address:		Address:	

emc INSURANCE

P.O. Box 712 • Des Moines, Iowa 50306-0712

POWER OF ATTORNEY APPOINTING INDIVIDUAL ATTORNEY-IN-FACT

KNOW ALL MEN BY THESE PRESENTS, that:

1. **Employers Mutual Casualty Company, an Iowa Corporation**
2. **EMCASCO Insurance Company, an Iowa Corporation**
3. **Union Insurance Company of Providence, an Iowa Corporation**
4. **Illinois EMCASCO Insurance Company, an Iowa Corporation**
5. **Dakota Fire Insurance Company, a North Dakota Corporation**
6. **EMC Property & Casualty Company, an Iowa Corporation**

hereinafter referred to severally as "Company" and collectively as "Companies", each does, by these presents, make, constitute and appoint:

Sam Sealer

its true and lawful attorney-in-fact, with full power and authority conferred to sign, seal, and execute the following Surety Bond(s):

Surety Bond Number	Principal:	Obligee:
S056704	RELIABLE PAVING, INC	

and to bind each Company thereby as fully and to the same extent as if such instruments were signed by the duly authorized officers of each such Company, and all of the acts of said attorney pursuant to the authority hereby given are hereby ratified and confirmed.

AUTHORITY FOR POWER OF ATTORNEY

This Power-of-Attorney is made and executed pursuant to and by the authority of the following resolution of the Boards of Directors of each of the Companies at the first regularly scheduled meeting of each company duly called and held in 1999:

RESOLVED: The President and Chief Executive Officer, any Vice President, the Treasurer and the Secretary of Employers Mutual Casualty Company shall have power and authority to (1) appoint attorneys-in-fact and authorize them to execute on behalf of each Company and attach the seal of the Company thereto, bonds and undertakings, recognizances, contracts of indemnity and other writings obligatory in the nature thereof; and (2) to remove any such attorney-in-fact at any time and revoke the power and authority given to him or her. Attorneys-in-fact shall have power and authority, subject to the terms and limitations of the power-of-attorney issued to them, to execute and deliver on behalf of the Company, and to attach the seal of the Company thereto, bonds and undertakings, recognizances, contracts of indemnity and other writings obligatory in the nature thereof, and any such instrument executed by any such attorney-in-fact shall be fully and in all respects binding upon the Company. Certification as to the validity of any power-of-attorney authorized herein made by an officer of Employers Mutual Casualty Company shall be fully and in all respects binding upon this Company. The facsimile or mechanically reproduced signature of such officer, whether made heretofore or hereafter, wherever appearing upon a certified copy of any power-of-attorney of the Company, shall be valid and binding upon the Company with the same force and effect as though manually affixed.

IN WITNESS THEREOF, the Companies have caused these presents to be signed for each by their officers as shown, and the Corporate seals to be hereto affixed this 17th day of September, 2025.

Seals

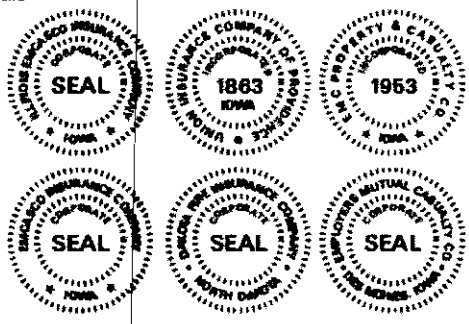



Scott R. Jean, President & CEO of Company 1; Chairman, President & CEO of Companies 2, 3, 4, 5 & 6

Todd Strother, Executive Vice President Chief Legal Officer & Secretary of Companies 1, 2, 3, 4, 5 & 6

On this 17th day of September, 2025 before me a Notary Public in and for the State of Iowa, personally appeared Scott R. Jean and Todd Strother, who, being by me duly sworn, did say that they are, and are known to me to be the CEO, Chairman, President, Executive Vice President, Chief Legal Officer and/or Secretary, respectively, of each of the Companies above; that the seals affixed to this instrument are the seals of said corporations; that said instrument was signed and sealed on behalf of each of the Companies by authority of their respective Boards of Directors; and that the said Scott R. Jean and Todd Strother, as such officers, acknowledged the execution of said instrument to be their voluntary act and deed, and the voluntary act and deed of each of the Companies.

My Commission Expires August 13, 2028.

Notary Public in and for the State of Iowa

CERTIFICATE

I, Ryan J. Springer, Vice President of the Companies, do hereby certify that the foregoing resolution of the Boards of Directors by each of the Companies, and this Power of Attorney issued pursuant thereto on 17th day of September, 2025 are true and correct and are still in full force and effect.

In Testimony Whereof I have subscribed my name and affixed the facsimile seal of each Company this 6th day of November, 2025.

Vice President

TAKINGS IMPACT ASSESSMENT CHECKLIST

Complete this form for any county action that involves the adoption of a regulation, policy, guideline, court resolution, or order.

Project/Regulation Name: Bid No. F2025015 – Annual Contract for Various Concrete Services – Precinct 1 – Reliable Paving, Inc.

County Department: PURCHASING

Contact Person: Melissa Lee, C.P.M., A.P.P.

Phone Number for Contact Person: (817) 884-3245

Type of TIA Performed: (SHORT TIA) or FULL TIA. Circle one after answering the questions in Sections II and III below.

****

I. Stated Purpose

Attach to this checklist an explanation of the purpose of the regulation, policy, guideline, court resolution or order.

****

Note: The remainder of this Takings Impact Assessment Checklist should be completed in consultation with the Criminal District Attorney's Office.

II. Potential Effect on Private Real Property

1. Does the county action require a physical invasion, occupation or dedication of real property?

   Yes_____ No__√__

2. Does the county action limit or restrict a real property right, even partially or temporarily?

   Yes_____ No__√__

If you answered yes to either question, go to Section III. If you answered no to both, STOP HERE and circle SHORT TIA at the top of the form.

****

TARRANT COUNTY
COMMISSIONERS COURT COMMUNICATION

Court Date: December 9, 2025	**Court Order #:**	**Page:** 1 of 10
Department: Purchasing	**Prepared By:** Jill E. Stine	**Approved By:** Christopher Lax, CPSM, CPSD, CPCP

SUBJECT:

Bid No. F2025184 - Annual Contract for Mechanical and Plumbing Services - Facilities Management - Enviromatic Systems of Fort Worth, Inc.

***** CONSENT AGENDA *****

COMMISSIONERS COURT ACTION REQUESTED

It is requested that the Commissioners Court accept payment bond for Bid No. F2025184, Annual Contract for Mechanical and Plumbing Services, for Facilities Management, from Enviromatic Systems of Fort Worth, Inc. for $62,421.00.

BACKGROUND

On September 3, 2025, the Commissioners Court, through Court Order #145890, awarded Bid No. F2025184, Annualc Contract fc Mechanical and Plumbing Services, for Facilities Management, to the following vendors:

Primary	A &G Services
	Aire Frezco, LLC
	Alpha Mechanical Contractors, LLC
	Amundson Plumbing
	CEC Facilities Group, LLC
	Enviromatic Systems of Fort Worth
	Freer Mechanical Contractors, Inc.
	LPC Industries, LLC

The quote received from Enviromatic Systems of Fort Worth, Inc. meets all specifications and is acceptable to Facilities Management.

A payment bond is part of the requirements in order for the contractor to begin work. The bond is required solely for the protection of all claimants supplying labor or furnishing materials used on the project.

FISCAL IMPACT

Funding in the amount of $62,421.00 is available in account 10000-2026 General Fund/3110308000 Lon Evans Corrections Center/532025 Air Conditioning Maintenance Contract.

Attachments

backup.pdf

Building automation specialists

enviromatic SERVICES

RFB# F2025184

Date : November 17, 2025

Address : 600 W. Weatherford Street Fort Worth, Texas 76196

Reference: Lon Evans Cooling Tower Fill Replacement

We propose to furnish the necessary labor and materials for the above referenced project.
Our quotation includes the following:

- **Provide and replace fill on cooling tower 75Ton**
- **Provide and replace fill tubes**
- **Provide and replace tube supports**
- **Clean and inspect condenser water strainer**
- **Necessary rigging**
- **Necessary labor**
- **Necessary tools, equipment**
- **Necessary Bond**

Total Project Cost IS	**$62,421.00**

Labor 4 Tech , * 56HR = 224 Man Hours * 125/hr = $28,000.00
Materials $27,125.00 * 1.20 = $32,550.00
Bond 3% * 60,550,00 = $1,871.00

We exclude the following:

1. Sales tax
2. Overtime labor

General Conditions:

1. Any work outside of the proposed that is deemed necessary will be proposed to the customer for approval.

We appreciate the opportunity to be of service. If you have any questions, please feel free to call (214) 679 5214 . Our price is good for 30 days from the above date.

Respectfully submitted Matt Hein

Matt Hein

ACCEPTED BY: DATE:

2337 West Warrior Trail, Grand Prairie, TX 75052
Phone: (972) 602-9077 Fax: (972) 602-9083 www.enviromaticservices.com

Bond No. TIC017434

Document A312™ – 2010

Conforms with The American Institute of Architects AIA Document 312

Payment Bond

CONTRACTOR:
(Name, legal status and address)

Enviromatic Systems, Inc.
2337 West Warrior Trail
Grand Prairie, TX 75052

SURETY:
(Name, legal status and principal place of business)

First Founders Assurance Company
2 Stamford Plaza Suite 1504, 281 Tresser Boulevard
Stamford, CT 06901
Mailing Address for Notices

1411 Opus Place, Suite 450
Downers Grove, Illinois 60515

This document has important legal consequences. Consultation with an attorney is encouraged with respect to its completion or modification.

Any singular reference to Contractor, Surety, Owner or other party shall be considered plural where applicable.

OWNER:
(Name, legal status and address)

Tarrant County
100 E. Weatherford Street, Suite 303
Fort Worth, TX 76196

CONSTRUCTION CONTRACT
Date: November 17, 2025

Amount: $ 62,421.00 Sixty Two Thousand Four Hundred Twenty One Dollars and 00/100

Description:
(Name and location)

Lon Evans Cooling Tower Fill Replacement

BOND
Date: November 19, 2025
(Not earlier than Construction Contract Date)

Amount: $ 62,421.00 Sixty Two Thousand Four Hundred Twenty One Dollars and 00/100

Modifications to this Bond: [X] None [ ] See Section 18

CONTRACTOR AS PRINCIPAL
Company: *(Corporate Seal)*

Enviromatic Systems, Inc.

Signature: _____

Name and Title:

SURETY
Company: *(Corporate Seal)*

First Founders Assurance Company

Signature: Ma M

Name and Title: Martin Moss
Attorney-in-Fact

(Any additional signatures appear on the last page of this Payment Bond.)

(FOR INFORMATION ONLY — Name, address and telephone)

AGENT or BROKER:

HUB International Midwest Limited
1411 Opus Place, Ste. 450
Downers Grove, IL 60515
630-468-5600

OWNER'S REPRESENTATIVE:
(Architect, Engineer or other party:)

§ 1 The Contractor and Surety, jointly and severally, bind themselves, their heirs, executors, administrators, successors and assigns to the Owner to pay for labor, materials and equipment furnished for use in the performance of the Construction Contract, which is incorporated herein by reference, subject to the following terms.

§ 2 If the Contractor promptly makes payment of all sums due to Claimants, and defends, indemnifies and holds harmless the Owner from claims, demands, liens or suits by any person or entity seeking payment for labor, materials or equipment furnished for use in the performance of the Construction Contract, then the Surety and the Contractor shall have no obligation under this Bond.

§ 3 If there is no Owner Default under the Construction Contract, the Surety's obligation to the Owner under this Bond shall arise after the Owner has promptly notified the Contractor and the Surety (at the address described in Section 13) of claims, demands, liens or suits against the Owner or the Owner's property by any person or entity seeking payment for labor, materials or equipment furnished for use in the performance of the Construction Contract and tendered defense of such claims, demands, liens or suits to the Contractor and the Surety.

§ 4 When the Owner has satisfied the conditions in Section 3, the Surety shall promptly and at the Surety's expense defend, indemnify and hold harmless the Owner against a duly tendered claim, demand, lien or suit.

§ 5 The Surety's obligations to a Claimant under this Bond shall arise after the following:

§ 5.1 Claimants, who do not have a direct contract with the Contractor,

.1 have furnished a written notice of non-payment to the Contractor, stating with substantial accuracy the amount claimed and the name of the party to whom the materials were, or equipment was, furnished or supplied or for whom the labor was done or performed, within ninety (90) days after having last performed labor or last furnished materials or equipment included in the Claim; and

.2 have sent a Claim to the Surety (at the address described in Section 13).

§ 5.2 Claimants, who are employed by or have a direct contract with the Contractor, have sent a Claim to the Surety (at the address described in Section 13).

§ 6 If a notice of non-payment required by Section 5.1.1 is given by the Owner to the Contractor, that is sufficient to satisfy a Claimant's obligation to furnish a written notice of non-payment under Section 5.1.1.

§ 7 When a Claimant has satisfied the conditions of Sections 5.1 or 5.2, whichever is applicable, the Surety shall promptly and at the Surety's expense take the following actions:

§ 7.1 Send an answer to the Claimant, with a copy to the Owner, within sixty (60) days after receipt of the Claim, stating the amounts that are undisputed and the basis for challenging any amounts that are disputed; and

§ 7.2 Pay or arrange for payment of any undisputed amounts.

§ 7.3 The Surety's failure to discharge its obligations under Section 7.1 or Section 7.2 shall not be deemed to constitute a waiver of defenses the Surety or Contractor may have or acquire as to a Claim, except as to undisputed amounts for which the Surety and Claimant have reached agreement. If, however, the Surety fails to discharge its obligations under Section 7.1 or Section 7.2, the Surety shall indemnify the Claimant for the reasonable attorney's fees the Claimant incurs thereafter to recover any sums found to be due and owing to the Claimant.

§ 8 The Surety's total obligation shall not exceed the amount of this Bond, plus the amount of reasonable attorney's fees provided under Section 7.3, and the amount of this Bond shall be credited for any payments made in good faith by the Surety.

§ 9 Amounts owed by the Owner to the Contractor under the Construction Contract shall be used for the performance of the Construction Contract and to satisfy claims, if any, under any construction performance bond. By the Contractor furnishing and the Owner accepting this Bond, they agree that all funds earned by the Contractor in the performance of the Construction Contract are dedicated to satisfy obligations of the Contractor and Surety under this Bond, subject to the Owner's priority to use the funds for the completion of the work.

§ 10 The Surety shall not be liable to the Owner, Claimants or others for obligations of the Contractor that are unrelated to the Construction Contract. The Owner shall not be liable for the payment of any costs or expenses of any Claimant under this Bond, and shall have under this Bond no obligation to make payments to, or give notice on behalf of, Claimants or otherwise have any obligations to Claimants under this Bond.

§ 11 The Surety hereby waives notice of any change, including changes of time, to the Construction Contract or to related subcontracts, purchase orders and other obligations.

§ 12 No suit or action shall be commenced by a Claimant under this Bond other than in a court of competent jurisdiction in the state in which the project that is the subject of the Construction Contract is located or after the expiration of one year from the date (1) on which the Claimant sent a Claim to the Surety pursuant to Section 5.1.2 or 5.2, or (2) on which the last labor or service was performed by anyone or the last materials or equipment were furnished by anyone under the Construction Contract, whichever of (1) or (2) first occurs. If the provisions of this Paragraph are void or prohibited by law, the minimum period of limitation available to sureties as a defense in the jurisdiction of the suit shall be applicable.

§ 13 Notice and Claims to the Surety, the Owner or the Contractor shall be mailed or delivered to the address shown on the page on which their signature appears. Actual receipt of notice or Claims, however accomplished, shall be sufficient compliance as of the date received.

§ 14 When this Bond has been furnished to comply with a statutory or other legal requirement in the location where the construction was to be performed, any provision in this Bond conflicting with said statutory or legal requirement shall be deemed deleted herefrom and provisions conforming to such statutory or other legal requirement shall be deemed incorporated herein. When so furnished, the intent is that this Bond shall be construed as a statutory bond and not as a common law bond.

§ 15 Upon request by any person or entity appearing to be a potential beneficiary of this Bond, the Contractor and Owner shall promptly furnish a copy of this Bond or shall permit a copy to be made.

§ 16 Definitions

§ 16.1 Claim. A written statement by the Claimant including at a minimum:

- .1 the name of the Claimant;
- .2 the name of the person for whom the labor was done, or materials or equipment furnished;
- .3 a copy of the agreement or purchase order pursuant to which labor, materials or equipment was furnished for use in the performance of the Construction Contract;
- .4 a brief description of the labor, materials or equipment furnished;
- .5 the date on which the Claimant last performed labor or last furnished materials or equipment for use in the performance of the Construction Contract;
- .6 the total amount earned by the Claimant for labor, materials or equipment furnished as of the date of the Claim;
- .7 the total amount of previous payments received by the Claimant; and
- .8 the total amount due and unpaid to the Claimant for labor, materials or equipment furnished as of the date of the Claim.

§ 16.2 Claimant. An individual or entity having a direct contract with the Contractor or with a subcontractor of the Contractor to furnish labor, materials or equipment for use in the performance of the Construction Contract. The term Claimant also includes any individual or entity that has rightfully asserted a claim under an applicable mechanic's lien or similar statute against the real property upon which the Project is located. The intent of this Bond shall be to include without limitation in the terms "labor, materials or equipment" that part of water, gas, power, light, heat, oil, gasoline, telephone service or rental equipment used in the Construction Contract, architectural and engineering services required for performance of the work of the Contractor and the Contractor's subcontractors, and all other items for which a mechanic's lien may be asserted in the jurisdiction where the labor, materials or equipment were furnished.

§ 16.3 Construction Contract. The agreement between the Owner and Contractor identified on the cover page, including all Contract Documents and all changes made to the agreement and the Contract Documents.

§ 16.4 Owner Default. Failure of the Owner, which has not been remedied or waived, to pay the Contractor as required under the Construction Contract or to perform and complete or comply with the other material terms of the Construction Contract.

§ 16.5 Contract Documents. All the documents that comprise the agreement between the Owner and Contractor.

§ 17 If this Bond is issued for an agreement between a Contractor and subcontractor, the term Contractor in this Bond shall be deemed to be Subcontractor and the term Owner shall be deemed to be Contractor.

§ 18 Modifications to this bond are as follows:

(Space is provided below for additional signatures of added parties, other than those appearing on the cover page.)

CONTRACTOR AS PRINCIPAL		**SURETY**	
Company:	*(Corporate Seal)*	Company:	*(Corporate Seal)*
Signature: _____		Signature: _____	
Name and Title:		Name and Title:	
Address		Address	

2 Stamford Plaza
Suite 1504, 281 Tresser Boulevard
Stamford, Connecticut 06901
us.surety@trisura.com

POWER OF ATTORNEY
FIRST FOUNDERS ASSURANCE COMPANY
an affiliate of Trisura Insurance Company and subsidiary of Trisura Group Limited

Bond # TIC017434

KNOW ALL MEN BY THESE PRESENTS: That **FIRST FOUNDERS ASSURANCE COMPANY,** a company organized and existing under the laws of the State of New Jersey, authorized to conduct a surety business, and having its principal place of business at 2 Stamford Plaza, Suite 1504, Tresser Boulevard, Stamford, Connecticut 06901, does hereby constitute and appoint:

Martin Moss, Kelly Gardner, Stephen Kazmer, Melissa Schmidt, Dawn Morgan

their true and lawful attorney(s)-in-fact to execute, seal and deliver for and on its behalf as surety, any and all bonds and undertakings, contracts of indemnity and other writings obligatory in the nature thereof, which are or may be allowed, required or permitted by law, statute, rule, regulation, contract or otherwise, and the execution of such instrument(s) in pursuance of these presents, shall be as binding upon the said **FIRST FOUNDERS ASSURANCE COMPANY,** as fully and amply, to all intents and purposes, as if the same had been duly executed and acknowledged by their regularly elected officers at their principal offices.

This Power of Attorney is executed, and may be revoked, pursuant to and by authority of the By-Laws of **FIRST FOUNDERS ASSURANCE COMPANY** and is granted under and by authority of the following resolution as adopted by the Board of Directors of **FIRST FOUNDERS ASSURANCE COMPANY.**

"**RESOLVED,** that (1) the President & Chief Executive Officer, Chief Underwriting Officer, Executive Vice President, Senior Vice President, Vice President, or Secretary of the Company shall have the power to appoint, and to revoke the appointments of, Attorneys-in-Fact or agents with power and authority as defined or limited in their respective powers of attorney, and to execute on behalf of the Company and affix the Company's seal thereto, bonds, undertakings, recognizances, contracts of indemnity and other written obligations in the nature thereof or related thereto; and (2) any such Officers of the Company may appoint and revoke the appointments of joint-control custodians, agents for acceptance of process, and Attorneys-in-fact with authority to execute waivers and consents on behalf of the Company; and (3) the signature of any such Officer of the Company and the Company's seal may be affixed by facsimile to any power of attorney or certification given for the execution of any bond, undertaking, recognizance, contract of indemnity or other written obligation in the nature thereof or related thereto, such signature and seals when so used whether heretofore or hereafter, being hereby adopted by the Company as the original signature of such officer and the original seal of the Company, to be valid and binding upon the Company with the same force and effect as though manually affixed."

IN WITNESS WHEREOF, **FIRST FOUNDERS ASSURANCE COMPANY,** has executed and attested these present on this **24th** day of **June, 2025.**

State of Connecticut
County of Fairfield

George James, Chief Underwriting Officer

First Founders Assurance Company CORPORATE SEAL

On this **24th** day of **June, 2025,** before me came the individual who executed the preceding instrument, to me personally known, and, being by me duly sworn, said he is the therein described and authorized officer of **FIRST FOUNDERS ASSURANCE COMPANY;** that the seal affixed to said instrument is the Corporate Seal of said Company; and that the said Corporate Seal and his signature were duly affixed by order of the Board of Directors of said Company.

IN TESTIMONY WHEREOF, I have hereunto set my hand affixed Official Seal, at the County of Fairfield, State of Connecticut the day and year first above written.

Tysheena Holeyfield
_____, a Notary Public of Connecticut
My Commission Expires: 6-30-30

TYSHEENA HOLEYFIELD
Notary Public, Connecticut
My Commission Expires 06/30/2030

CERTIFICATION

I, the undersigned officer of **FIRST FOUNDERS ASSURANCE COMPANY,** do hereby certify that I have compared the foregoing copy of the Power of Attorney and affidavit, and the copy of the Sections of the By-Laws of said Company as set forth in said Power of Attorney, with the originals on file in the home office of said company, and that the same are correct transcripts thereof, and of the whole of the said originals, and that the said Power of Attorney has not been revoked and is now in full force and effect.

IN TESTIMONY WHEREOF, I have hereunto set my hand on this 19th day of November, 2025.

By: _____
Name: Terry Michalakos
Title: Senior Vice President

TO CONFIRM AUTHENTICITY OF THIS BOND OR DOCUMENT EMAIL: us.surety@trisura.com

STATE OF ILLINOIS }
COUNTY OF DU PAGE}

On November 19, 2025, before me, Alexa K. Costello, a Notary Public in and for said County and State, duly commissioned and sworn, personally appeared, Martin Moss, known to me to be Attorney-in-Fact of First Founders Assurance Company, the corporation described in and that executed the within and foregoing instrument, and known to me to be the person who executed the said instrument on behalf of the said corporation, and he duly acknowledged to me that such corporation executed the same.

IN WITNESS WHEREOF, I have hereunto set my hand and affixed my official seal, the day and year stated in this certificate above.

My Commission Expires September 20, 2027

Alexa K. Costello

Alexa K. Costello, Notary Public
Commission No. 978152

OFFICIAL SEAL
Alexa K Costello
NOTARY PUBLIC, STATE OF ILLINOIS
My Commission Expires September 20, 2027
ID #978152

TAKINGS IMPACT ASSESSMENT CHECKLIST

Complete this form for any county action that involves the adoption of a regulation, policy, guideline, court resolution, or order.

Project/Regulation Name: Bid No.F2025184 - Annual Contract for Mechanical and Plumbing Services – Facilities Management – Enviromatic Systems of Fort Worth, Inc.

County Department: PURCHASING

Contact Person: Melissa Lee, C.P.M., A.P.P.

Phone Number for Contact Person: (817) 884-3245

Type of TIA Performed: (SHORT TIA) or FULL TIA. Circle one after answering the questions in Sections II and III below.

****

I. Stated Purpose

Attach to this checklist an explanation of the purpose of the regulation, policy, guideline, court resolution or order.

****

Note: The remainder of this Takings Impact Assessment Checklist should be completed in consultation with the Criminal District Attorney's Office.

II. Potential Effect on Private Real Property

1. Does the county action require a physical invasion, occupation or dedication of real property?

   Yes_____ No __√__

2. Does the county action limit or restrict a real property right, even partially or temporarily?

   Yes_____ No __√__

If you answered yes to either question, go to Section III. If you answered no to both, STOP HERE and circle SHORT TIA at the top of the form.

****

TARRANT COUNTY
COMMISSIONERS COURT COMMUNICATION

Court Date: December 9, 2025	**Court Order #:**	**Page:** 1 of 15
Department: Purchasing	**Prepared By:** Jill E. Stine	**Approved By:** Christopher Lax, CPSM, CPSD, CPCP

SUBJECT:

Bid No. F2025099 - Annual Contract for Carpet, Tile and Miscellaneous Flooring Materials and Services - Facilities Management - DMCA, Inc.

***** CONSENT AGENDA *****

COMMISSIONERS COURT ACTION REQUESTED

It is requested that the Commissioners Court accept payment and performance bonds for Bid No. F2025099, Annual Contract for Carpet, Tile and Miscellaneous Flooring Materials and Services, for Facilities Management, DMCA, Inc. for $101,438.20.

BACKGROUND

On April 15, 2025, the Commissioners Court, through Court Order #145082, awarded Bid No. F2025099, Annual Contract for Carpet, Tile, and Miscellaneous Flooring Materials and Services, for Facilities Management, to the following vendors:

Primary	DMCA, Inc.
Secondary	Gomez Floor Covering, Inc. d/b/a GFC Contracting

The quote received from DMCA, Inc. meets all specifications and is acceptable to Facilities Management. DMCA, Inc. will provide all labor, materials, and equipment for VCT and carpet replacement at the Juvenile Complex.

A payment and performance bond is part of the requirements in order for the contractor to begin work. The bond is required solely for the protection of all claimants supplying labor or furnishing materials used on the project.

FISCAL IMPACT

Funding in the amount of $101,438.20 is available in account 45100-2026 General Fund/3110309000 Lyn W. Ross Juvenile Center/540000 Capital Outlay

Attachments

backup.pdf

DMCA, INC.
1527 W STATE HWY 114, STE 500 #139
GRAPEVINE, TX 76051

Attention: KENNETH FORGE
Salesperson: HELIODORO ESCALANTE
Estimator:
Project Manager: NATALIE MARSTELLA
Addendums Read:

Proposal

Install Date: 4/25/2025
Plan Date:
Bid Due Date: 4/23/2025
Date: 10/31/2025
Time: 3:30 PM
Revision #:
Bid #: 150

Bill To	Project
TARRANT COUNTY 100 EAST WEATHERFORD SUITE 303 FT WORTH, TX 76196	JUVENILE COMPLEX VCT & CARPET REPLACEMENT 2701 KIMBO RD FORT WORTH, TX 76111

KENNETH FORGE
Phone: (817) 884-1111

BASE BID

Line	Description	UOM: Quantity:	Unit Price:	Extended:
1	**CPT-1 CARPET TILE SUPPLIED - INCLUDES 5% OVERAGE COST**			
	TARKETT®	SY		
	SUBSTANCE 24x24	454.00	$36.25	$16,457.50
	INGRESS 76208			
2	**CPT1 CARPET LABOR ONLY -**			
	DMCA, INC.	SY		
	LABOR	454.00	$4.50	$2,043.00
	N/A			
3	**DEMO EXISTING CARPET TILE -**			
	DMCA, INC.	SY		
	LABOR	454.00	$2.50	$1,135.00
	N/A			
4	**SCRAPE CARPET TILE ADHESIVE -**			
	DMCA, INC.	SY		
	LABOR	454.00	$3.00	$1,362.00
	N/A			
5	**VCT-1 SUPPLIED AND INSTALLED -**			
	ARMSTRONG WORLD INDUSTRIES, INC.	SF		
	TILE-EXCELON STANDARD* 1/8" TILE IMPERIAL TEXTURE - WASHED LINEN 51810	13,545.00	$2.25	$30,476.25
6	**VCT-1 DEMO -**			
	DMCA, INC.	SF		
	LABOR	13,545.00	$0.75	$10,158.75
	N/A			
7	**VCT-1 SCRAPE ADHESIVE LABOR ONLY -**			
	DMCA, INC.	SY		
	LABOR	1,505.00	$3.00	$4,515.00
	N/A			
8	**FLOOR PREP SUPPLIED -**			
	ARDEX ®	EA		
	FEATHER FINISH	200.00	$32.00	$6,400.00
	10 LBS			

9	**FLOOR PREP INSTALLED -**			
	DMCA, INC.	HR		
	LABOR	140.00	$60.00	$8,400.00
	N/A			
10	**RB1 4" COVE BASE SUPPLIED AND INSTALLED -**			
	JOHNSONITE®	LF		
	WALL BASE (DC)-RUBBER-COVE-4"X1/8"X4' LENGTHS	4,680.00	$1.75	$8,190.00
	CHARCOAL 20			
11	**RB1 DEMO WALL BASE LABOR ONLY -**			
	DMCA, INC.	LF		
	LABOR	4,680.00	$0.20	$936.00
	N/A			
12	**TRANSITION CPT TO VCT SUPPLIED AND INSTALLED -**			
	JOHNSONITE®	LF		
	ADAPT/TRANS-VINYL-SLT-XX-C SLIM LINE 1/4" TO .080"	288.00	$3.00	$864.00
	BLACK 40			
13	**TRANSITION TILE TO VCT SUPPLIED AND INSTALLED -**			
	JOHNSONITE®	LF		
	TBD	120.00	$3.00	$360.00
	TBD			
14	**MOISTURE TESTING - 19 MOISTURE TEST REQUIRED**			
	DMCA, INC.	SF		
	MATERIALS & LABOR	16,672.00	$0.10	$1,667.20
	N/A			
15	**FURNITURE MOVING LABOR ONLY -**			
	DMCA, INC.	SY		
	LABOR	454.00	$2.75	$1,248.50
	N/A			
16	**FURNITURE LIFT LABOR ONLY -**			
	DMCA, INC.	SY		
	LABOR	150.00	$5.00	$750.00
	N/A			
17	**AFTER HOURS LABOR -**			
	DMCA, INC.	HR		
	LABOR	2,000.00	$2.00	$4,000.00
	N/A			
18	**PAYMENT AND PERFORMANCE BOND -**			
	DMCA, INC.	EA		
	PAYMENT & PERFORMANCE BOND	1.00	$2,475.00	$2,475.00
	NA			

TOTAL (THESE LINE ITEMS TAX EXEMPT) **$ 101,438.20**

NOTES

EXCLUSUIONS:

EXCLUDES WAXING, MOISTURE MITIGATION, MAJOR FLOOR PREP AND SALES TAX.

DMCA, Inc. will furnish, deliver, and install the above material in accordance with all transmitted plans, specifications and general conditions for the price listed on this document.
The price includes all applicable freight and taxes, unless otherwise noted.

MATERIAL TARIFF CONTINGENCY

As a result of the well-publicized trade dispute between the United States government and a number of other countries, substantial tariffs on manufactured goods and materials have been imposed, and additional tariffs may be imposed in the future. DMCA, Inc. believes the pricing contained in this quotation is accurate as of the date of submission. DMCA, Inc. reserves the right to modify its price, or withdraw its bid, in the event of a vendor price increase due to tariffs or if subsequent government action yields a material increase in the price of required materials or serves to interrupt the supply of required materials.

GENERAL EXCLUSIONS (UNLESS SPECIFICALLY INCLUDED IN THIS DOCUMENT): excludes all demolition, repair or take-up of existing flooring; excludes vacuuming, damp mopping, buffing, waxing or floor protection; excludes floor floating, leveling or repair; excludes sealing of floor, cleaning or removal of oil, grease, solvents, paints, plaster or other foreign substances; excludes asbestos control/abatement; excludes attic stock of material beyond installation coverage; excludes work after hours and weekends and multiple phases; excludes any furniture/fixture movement; excludes any permits required by state(s) or local requirements; excludes any addenda beyond the base bid; disconnect/reconnect of any electrical or mechanical products; Hoisting – Elevators or, if elevators are not operable or unavailable, hoisting equipment is assumed to be provided by the General Contractor. If this equipment is not available or inoperable, then GC will be charged the lesser of the cost to rent such equipment or to manually haul materials up stairs on a Time and Material basis. Excludes correction of high fly ash content in slabs (greater than 20%), which may affect polishing.

SITE CONDITIONS: Per CRI-104 7.0, the owner or general contractor is responsible for providing an acceptable substrate for the specified installation as well as light, power, water and and HVAC enclosed space.

SCHEDULE ACCELERATION: If the schedule is accelerated beyond the plan at the time of pricing, additional charges may occur in order to accommodate extra staff and/or irregular hours.

REMOVAL OF EXISTING FLOORING: Additional charges may be assessed for difficult or mechanical removal of old flooring. In such cases, DMCA, Inc. will discuss additional fee's prior to starting any additional work.

FLOOR PREPARATION: Substrate must meet manufacturer's requirement for flatness and levelness even if that standard is more demanding than what the concrete contractor's specifications call for. Any leveling or floating to meet these standards will result in additional charges and will be billed on a per bag basis at the following rates unless otherwise specified; $55 per bag for general floor prep/feather finish and $125 per bag for self leveler.

SLAB MOISTURE: Before installation, the owner or general contractor, or their designated testing agent, is required to submit to the flooring contractor a written report on the moisture and alkalinity conditions of the concrete substrates. Proper testing is essential for a successful installation and any deviation from industry accepted MVER, RH and pH test methods may result in an installation failure and will void manufacturer and installation warranties. If DMCA, Inc. provides these tests, the cost are $150 per test. In most cases DMCA, Inc. has these tests completed by a third party. Under no circumstances can testing be completed and/or flooring installed until the site has been fully enclosed and under HVAC for a minimum of 72 hours.

AMBIENT RELATIVE HUMIDITY: Must be within manufacturer recommended values for certain products such as wood flooring prior to installation. Please refer to the National Wood Flooring Association Guidelines Chapter 1 Part 1 Section C, Chapter 2 Part 1 Sections A and B, in addition to the manufacturer's specifications for the specified product requirements.

PRODUCT STORAGE: Client is subject to payment for materials held more than 30 days prior to the start or 30 days subsequent to the last day of the job. Storage fees are $.25 per yard per month for rolled/sheet goods and $100 per pallet/bin per month for all other material. Client is not subject to early storage if a result of our own ordering process.

WARRANTY: DMCA, Inc. will provide a one year workmanship warranty on most services. Warranty does not include any moisture related sub floor failures or product failures as they are subject to the respective manufacturer.

GENERAL TERMS: DMCA, Inc.. will not accept charge backs of damage or cleaning without the option to inspect claim(s) to repair or without the option to make arrangements for acceptable repairs at their expense. DMCA, Inc.. is not responsible for any claims that might result from product delivery date changes beyond their control. If a manufacturer requires a deposit to manufacture/ship certain items, client will be responsible for pre-payment of said deposit. This proposal is valid for thirty (30) days. Full payment is due thirty (30) days from receipt of invoice unless otherwise specified.

DMCA, Inc.

Signed:

HELIODORO ESCALANTE

Proposal Total: $101,438.20

TARRANT COUNTY

Accepted By:

Anticipated Installation Start Date:

WESTERN NATIONAL INSURANCE
The relationship company

WESTERN NATIONAL MUTUAL INSURANCE COMPANY

PERFORMANCE BOND

Bond No. 78101

KNOW ALL MEN BY THESE PRESENTS: That we, the undersigned, DMCA, Inc., as Principal, and Western National Mutual Insurance Company, with its home office at 4700 West 77th Street, Edina, MN 55435, a corporation organized and existing under and by virtue of the laws of the State of Minnesota, and duly authorized to transact business in the State of Texas, as Surety, are held and firmly bound, jointly and severally, with our heirs, executors, administrators, successors and assigns, unto Tarrant County, having an address of 100 East Weatherford, Suite 303 Fort Worth, TX 76196 (hereinafter referred to as "Obligee"), in the penal sum of One Hundred One Thousand, Four Hundred Thirty-Eight and 20/100 ($ 101,438.20) for the performance of the Construction Contract incorporated herein by reference, contingent upon all of the terms, conditions and limitations set forth herein.

SIGNED and sealed this _____ day of _____, 20___

THE CONDITION OF THE ABOVE OBLIGATION IS SUCH THAT, WHEREAS, the above named Principal did on the ___ day of _____, 20____, enter into a written contract with the Obligee for JUVENILE COMPLEX VCT & CARPET REPLACEMENT (hereinafter "the Contract").

NOW, if the said Principal shall well and faithfully do and perform the things agreed by Principal to be done and performed according to the terms of the said Construction Contract, the Surety and Principal shall have no obligation under this Bond, except when applicable to participate in duly noticed conferences as provided in paragraph 1(a), and this obligation shall be void; otherwise, the same shall remain in full force and effect, it being expressly understood and agreed that this undertaking shall be for the benefit of the Obligee herein only and that the total liability of the Surety hereunder shall in no event exceed the penal amount of this obligation as herein stated.

1. If there is no Obligee Default under the Construction Contract, the Obligee having performed all of its obligations under the Contract, the Surety's obligation to the Obligee under this bond shall arise only after:

   a) The Obligee first provides notice to the Principal and the Surety at its address set forth above that the Obligee is considering declaring a Principal Default. **Such notice shall indicate whether the Obligee is requesting a conference among the Obligee, Principal and Surety to discuss the Principal's performance. If the Obligee does not request a conference, the Surety may, within five (5) business days after receipt of the Obligee's notice, request a conference, the Obligee shall attend.** Unless the Obligee agrees otherwise, any conference requested under this Section 1(a) shall be held within ten (10) business days of the Surety's receipt of the Obligee's notice.

If the Obligee, the Principal and the Surety agree, the Principal shall be allowed a reasonable time to perform the Construction Contract, but such agreement shall not waive the Obligee's right, if any, subsequently to declare a default; and

b) The Obligee declares a Principal Default, terminates the Construction Contract and notifies the Surety; and

c) The Obligee has agreed in writing to pay the Balance of the Contract Price in accordance with the terms of the Construction Contract to the Surety or to a contractor selected by Surety to perform the Construction Contract.

2. **Failure on the part of the Obligee to comply with the notice requirement in subparagraph (a) of the preceding paragraph 1 shall not constitute a failure to comply with a condition precendent** to the Surety's obligations, or release the Surety from its obligations, **except to the extent the Surety demonstrates actual prejudice.**

3. When the Obligee has satisfied all of the conditions of subparagraphs (a) through (c) of the preceding paragraph 1, the Surety shall promptly and at the Surety's expense take one of the following actions:

a) Arrange for the Principal, with consent of the Obligee, to perform and complete the Construction Contract;

b) Undertake to perform and complete the Construction Contract itself; through its agents or independent contractors;

c) Obtain bids or negotiated proposals from contractors acceptable to the Obligee for a contract for performance and completion of the Contract, arrange for a contract to be prepared for execution between the Obligee and the contractor to be secured with performance and payment bonds executed by the new contractor and a qualified surety in a form and amount equivalent to the bonds issued by Surety in connection with the Contract, and pay to the Obligee the difference between the price of the new contract and the balance of the Contract Price; or

d) Waive its right to perform and complete, arrange for completion, or obtain a new contractor, and with reasonable promptness under the circumstances:

i. After investigation, determine the amount for which it may be liable to the Obligee, subject to all of the limitations as set forth herein and particularly in subparagraph 2(c) above, and as soon as practicable after the amount is determined, make payment of that amount to the Obligee; or

ii. Deny liability in whole or in part and notify the Obligee, citing the reasons for denial.

4. Surety's liability to Obligee hereunder is limited to the reasonable cost of completion of the Contract in excess of the Balance of the Contract Price, and Surety shall not be liable for any other claims, costs, losses or expenses of Obligee or any other party of any nature whatsoever.

5. Obligee agrees that amounts owed by Obligee to the Principal under the Construction Contract shall be used for the performance of the Construction Contract and to pay valid claims by subcontractors, suppliers and/or others providing labor, materials and/or equipment to or on behalf of the Principal in the performance of the Construction Contract. By the Principal furnishing and the Obligee accepting this bond, they each agree that all funds earned by the Principal in the performance of the Construction Contract are dedicated to satisfy the obligations of the Principal and Surety under this bond. The Obligee further agrees that Surety shall not be liable to Obligee or others for obligations of the Principal that are unrelated to the Construction Contract, and that the Balance of the Contract Price shall not be reduced or set off on account of any such unrelated obligations or by any other claims of Obligee or others.

6. The Obligee agrees that any and all payments issued by the Surety in connection with this bond, whether to Obligee, to or on behalf of Principal and/or in furtherance of the performance or satisfaction of Surety's obligations hereunder in any way (including but not limited to costs and expenses incurred in undertaking or arranging to perform any work under or in connection with the Contract), are to be credited against and reduce the penal amount of the bond. Further, Obligee hereby waives notice of the Surety's issuance, undertaking or agreement to issue any such payment(s) and/or incur any such costs and Obligee covenants and agrees that the Surety may cease any and all work, payments or other performance hereunder of any kind whatsoever at any time that the penal amount of the bond has been reached or that the Surety deems the penal amount will be reached due to obligations incurred by the Surety (whether or not payment has been issued therefore); all without any requirement of prior notice to Obligee, and that any and all further obligations of Surety hereunder shall thereupon be deemed fully and unconditionally discharged.

7. No suit or action shall be commended hereunder by Obligee:

a) After the expiration of one (1) year following the date on which Principal ceased work on said Contract or Obligee declared Principal in default, whichever occurs first, it being understood, however, that if any limitation embodied in this bond is prohibited by any law controlling the construction hereof, such limitation shall be deemed to be amended so as to be equal to the minimum period of limitation permitted by such law;

b) Other than in a state court of competent jurisdiction in and for the county or other political subdivision of the state in which the project, or any part thereof, is situated, or in the United States District Court for the District in which the project, or any part thereof, is situated, and not elsewhere.

8. No right of action shall accrue on this bond to or for the use of any person or corporation other than the Obligee named herein or the heirs, executors, administrators or successors of the Obligee.

9. Definitions:

a) **Balance of the Contract Price.** The total amount payable by the Obligee to Principal under the Construction Contract after all proper adjustments have been made, including allowance to Principal of any amounts received by the Obligee in settlement of insurance or other claims for damages to which the Principal is entitled, reduced by all valid and proper payments made to or on behalf of the Principal under the Contract.

b) **Construction Contract.** The agreement between the Obligee and the Principal identified on the cover page, including all Contract Documents and changes made to the agreement and the Contract Documents.

c) **Principal Default.** Material breach by the Principal, which has not been remedied or waived, of its obligation to perform or otherwise to comply with a material term of the Construction Contract.

d) **Obligee Default.** Failure of the Obligee, which has not been remedied or waived, to pay the Principal as required under the Construction Contract or material breach of its obligation to perform, com plete or comply with the other material terms of the Construction Contract.

e) **Contract Documents. All the documents that comprise the agreement between the Owner and Constractor.**

f) If this bond is issued for an agreement between a Contractor and subcontractor, **the term Contractor in this Bond shall be deemed to be Subcontractor and the term Obligee shall be deemed to be Principal.**

10. Any notices to the Surety or the Principal or the Obligee shall be mailed or delivered to the address for each shown below.

Principal Company: DMCA, Inc.
Address: 1527 W. State Hwy 114, Suite 500 #139
Grapevine, TX 76051

Attest: _____ Signature: _____
Name and Title: Name and Title:

Surety Company: Western National Mutual Insurance Company
Address: 4700 W 77th Street
Edina MN 55435

Attest: _____ Signature: _____
Name and Title: Angie Astran, Client Manager Attorney-In-Fact: Brent M. Blonigan

WESTERN NATIONAL MUTUAL INSURANCE CORPORATE SEAL MINNESOTA

WESTERN NATIONAL INSURANCE
The relationship company

WESTERN NATIONAL MUTUAL INSURANCE COMPANY

LABOR AND MATERIAL PAYMENT BOND

Bond No. 78101

KNOW ALL MEN BY THESE PRESENTS: That we, the undersigned, DMCA, Inc., as Principal, and Western National Mutual Insurance Company, with its home office at 4700 West 77th Street, Edina, MN 55435, a corporation organized and existing under and by virtue of the laws of the State of Minnesota, and duly authorized to transact business in the State of Texas, as Surety, are held and firmly bound, jointly and severally, with our heirs, executors, administrators, successors and assigns unto Tarrant County, having an address of 100 East Weatherford, Suite 303 Fort Worth, TX 76196 (hereinafter referred to as "Obligee") in the penal sum of One Hundred One Thousand, Four Hundred Thirty-Eight and 20/100 $(101,438.20) dollars, for the payment of all Labor, materials and equipment furnished for use in the performance of the Construction Contract, contingent upon all of the terms, conditions and limitations hereof.

SIGNED and sealed this _____ day of _____, 20___.

THE CONDITION OF THE ABOVE OBLIGATION IS SUCH THAT, WHEREAS, the above named Principal did on the _____ day of _____, 20__ enter into a written contract with the Obligee for JUVENILE COMPLEX VCT & CARPET REPLACEMENT (hereinafter "the Contract").

NOW, if the said Principal shall pay all valid and adequately documented claims asserted by Claimants as defined herein, we agreeing and assenting that this undertaking shall be for the benefit of such Claimants, then the Surety and Principal shall have no obligations under this Bond and this obligation shall be void; otherwise, the same shall remain in full force and effect, it being expressly understood and agreed that the total liability of the Surety hereunder shall in no event exceed the penal amount of this obligation as herein stated. The Obligee agrees that any and all payments issued by the Surety under this bond are to be credited against the penal amount of the bond.

1. The Surety shall have no obligation to Claimants under this Bond unless and until:

    a) Claimants, who do not have a direct contract with the Principal, have furnished a written notice of non-payment to the Principal, stating with substantial accuracy the amount claimed and the name of the party to whom the materials were, or equipment was, furnished or supplied or for whom the labor was done or performed, within ninety (90) days after having last performed labor or last furnished materials or equipment in the Claim; or

b) Claimants who are employed by or have a direct contract with the Principal shall have given written notice to Surety, the Principal and the Obligee, above named, stating that a claim is being made under this Bond and stating with substantial accuracy the amount of such claim. Such notice shall be served by mailing the same by registered or certified mail, postage prepaid, in an envelope addressed to the Principal, Obligee or Surety, as the case may be, at the address stated for each herein.

2. No suit or action shall be commenced hereunder by any Claimant:

a) Unless, and no sooner than forty-five (45) days after, Claimant has served notice to Surety, Principal and Obligee as required in the preceding paragraph;

b) After the expiration of one (1) year following the date upon which the Claimant last perform ed work or furnished materials under said contract, it being understood, however, that if any limitation em bodied in this bond is prohibited by any law controlling the construction hereof such limitation shall be deemed to be amended so as to be equal to the minimum period of limitation permitted by such law;

c) Other than in a state court of competent jurisdiction in and for the county or other political subdivision of the state in which the project, or any part thereof, is situated, or in the United States District Court for the District in which the project, or any part thereof, is situated, and not elsewhere.

3. Obligee agrees that amounts owed by Obligee to the Principal under the Construction Contract shall be used for the performance of the Contract and to pay valid claims by subcontractors, suppliers and/or others providing Labor, materials and/or equipment to or on behalf of the Principal in the performance of the Construction Contract. By the Principal furnishing and the Obligee accepting this bond, they each agree that all funds earned by the Principal in the performance of the Construction Contract are dedicated to satisfy the obligations of the Principal and Surety under this bond.

4. The Obligee agrees that Surety shall not be liable to Obligee or others for obligations of the Principal that are unrelated to the Contract, and that the Balance of the Contract Price shall not be reduced or set off on account of any such unrelated obligations or by any other claims of Obligee or others.

5. The Obligee shall not be liable for payment of any costs or expenses of any Claimant under this Bond and Obligee shall have no obligation to make payments to, give notices on behalf of, or otherwise have obligations to Claimants under this Bond.

6. Upon request by any person or entity a ppearing to be a potential Claimant under this Bond, the Obligee shall promptly furnish a copy of this Bond or permit a copy to be made by the potential Claimant.

7. **Definitions**

a) **Claim.** A written statement by the Claimant including at a minimum:
   i. The name of Claimant;
   ii. The name of the person for whom the labor was done, or materials or equipment furnished;
   iii. A copy of the agreement or purchase order pursuant to which labor,

materials or equipm ent was furnished for use in the performance of the Construction Contract;

iv. A brief description of the labor, material or equipment furnished;
v. The date on which the Claimant last performed labor or last furnished materials or equipment for use in the performance of the Construction Contract;
vi. The total amount earned by the Claimant for labor, materials or equipment furnished as of the date of the Claim;
vii. The total amount of previous payments received by the Claimant; and
viii. The total am ount due and unpaid to the Claim ant for labor, materials or equipment furnished as of the date of the Claim.

b) **Claimant.** An individual or entity having a direct contract with the Principal or with a subcontractor of the Principal to furnish Labor, materials or equipment for use directly in the performance of the Construction Contract. **The term Claimant also includes any individual or entity that has rightfully asserted a claim under an applicable mechanic's lien or similar statue against the real property upon which the Project is located.** The intent of this Bond shall be to include without lim itation in the terms "labor, materials or equipment" that part of water, gas, power, light, heat, oil, gasoline, telephone service or rental equipment used in the Construction Contract, architectural and engineering services required for performance of the work of the Principal and Principal's subcontractors, and all other items for which a mechanic's lien may be asserted in the jurisdiction where the labor, materials or equipment were furnished.

c) **Construction Contract.** The agreement between the Obligee and the Contractor identified herein, including all Contract Documents and all changes made to the agreement and the Contract Documents.

d) **Obligee Default.** Failure of the Obligee, which has not been remedied or waived, to pay the Principal as required under the Construction Contract or to perform and complete or comply with the other material terms of the Construction Contract.

e) **Contract Documents.** All the documents that comprise the agreement between the Obligee and Principal.

f) **Labor.** Net wages only due and owing for work directly required in the performance of the Contract, and shall not be deemed to include union dues, fringe benefit or similar contributions, employee withholding taxes (or any other taxes), bonuses, or any other form of compensation or remuneration whatsoever.

8. If this Bond is issued for an agreement between a Principal and subcontractor, the term Principal in this Bond shall be deemed to Subcontractor and the term Obligee shall be deemed to be Principal.

Principal Name: DMCA, Inc.
Address: 1527 W. State Hwy 114, Suite 500 #139
Grapevine, TX 76051

Attest: _____ Signature: _____
Name and Title: Name and Title:

Surety Name: Western National Mutual Insurance Company
Address: 4700 W 77th St.
Edina, MN 55435

Attest: Angie Astran
Name and Title: Angie Astran, Client Manager

Signature: Brent M. Blonigan
Attorney-in-fact: Brent M. Blonigan

WESTERN NATIONAL MUTUAL INSURANCE CORPORATE SEAL MINNESOTA

WESTERN NATIONAL INSURANCE

The relationship company

POWER OF ATTORNEY

KNOW ALL MEN BY THESE PRESENTS: That Western National Mutual Insurance Company, a Minnesota mutual insurance company, does make, constitute, and appoint: **Debbie Palmer, Kara Pierce, Brent Blonigan**

Its true and lawful Attorney(s)-in-Fact, with full power and authority for and on behalf of the Company as surety, to execute and deliver and affix the seal of the Company thereto (if a seal is required) bond, undertakings recognizances or other written obligations in the nature thereof, **(other than bail bonds, bank depository bonds, mortgage deficiency bonds, mortgage guaranty bonds, guarantees of installment paper and note guaranty bonds, self-insurance workers compensation bonds guaranteeing payment of benefits, hazardous waste remediation bonds or black lung bonds),** as follows:

All written instruments in an amount not to exceed an aggregate of Seven Million Five Hundred Thousand and 00/100 Dollars ($7,500,000.00) for any single obligation, regardless of the number of instruments issued for the obligation.

and to bind Western National Mutual Insurance Company thereby, and all of the acts of said Attorneys-in-Fact, pursuant to these presents, are ratified and confirmed. This appointment is made under and by authority of the board of directors at a meeting held on September 28, 2010. This Power of Attorney is signed and sealed by facsimile under and by the authority of the following resolutions adopted by the board of directors of Western National Mutual Insurance Company on September 28, 2010:

RESOLVED that the president, any vice president, or assistant vice president in conjunction with the secretary or any assistant secretary, may appoint attorneys-in-fact or agents with authority as defined or limited in the instrument evidencing the appointment in each case, for and on behalf of the company to execute and deliver and affix the seal of the Company to bonds, undertakings, recognizances, and suretyship obligations of all kinds, and said officers may remove any such attorney-in-fact or agent and revoke any Power of Attorney previously granted to such person.

RESOLVED FURTHER that any bond, undertaking, recognizance, or suretyship obligation shall be valid and binding upon the Company

(i) when signed by the president, any vice president or assistant vice president, and attested and sealed (if a seal be required) by any secretary or assistant secretary; or

(ii) when signed by the president, any vice president or assistant vice president, secretary or assistant secretary, and countersigned and sealed (if a seal be required) by a duly authorized attorney-in-fact or agent; or

(iii) when duly executed and sealed (if a seal be required) by one or more attorneys-in-fact or agents pursuant to and within the limits of the authority evidenced by the Power of Attorney issued by the Company to such person or persons.

RESOLVED FURTHER that the signature of any authorized officer and the seal of the company may be affixed by facsimile to any Power of Attorney or certification thereof authorizing the execution and delivery of any bond, undertaking, recognizance, or other suretyship obligations of the Company; and such signature and seal when so used shall have the same force and effect as though manually affixed.

IN WITNESS WHEREOF, Western National Mutual Insurance Company has caused these presents to be signed by its proper officer and its corporate seal to be affixed this 16th day of December, 2020.

Jennifer A. Young, Secretary

WESTERN NATIONAL MUTUAL INSURANCE CORPORATE SEAL MINNESOTA

Mark S. Hewitt, Vice President, Surety

STATE OF MINNESOTA, COUNTY OF HENNEPIN

On this 16th day of December, 2020, personally came before me, Jennifer A. Young and Mark S. Hewitt and to me known to be the individuals and officers of the Western National Mutual Insurance Company who executed the above instrument, and they each acknowledged the execution of the same, and being by me duly sworn, did severally dispose and say; that they are the said officers of the corporation aforesaid, and that the seal affixed to the above instrument is the seal of the corporation, and that said corporate seal and their signatures as such officers were duly affixed and subscribed to the said instrument by the authority of the board of directors of said corporation.

DEENA ANJALI ENTRIKIN NOTARY PUBLIC MINNESOTA My Commission Expires 1/31/2029

Deena Anjali Entrikin, Notary Public
My commission expires January 31, 2029

CERTIFICATE

I, the undersigned, Secretary of the Western National Mutual Insurance Company, a Minnesota corporation, CERTIFY that the foregoing and attached Power of Attorney remains in full force and has not been revoked; and furthermore, that the Resolutions of the board of directors set forth in the Power of Attorney, are now in force.

WESTERN NATIONAL MUTUAL INSURANCE CORPORATE SEAL MINNESOTA

Signed and sealed at the City of Edina, MN this ____day of_____,_____

Jennifer A. Young, Secretary

TAKINGS IMPACT ASSESSMENT CHECKLIST

Complete this form for any county action that involves the adoption of a regulation, policy, guideline, court resolution, or order.

Project/Regulation Name: Bid No.F2025099 - Annual Contract for Carpet, Tile and Miscellaneous Flooring Materials – Facilities Management – DMCA, Inc.

County Department: PURCHASING

Contact Person: Melissa Lee, C.P.M., A.P.P.

Phone Number for Contact Person: (817) 884-3245

Type of TIA Performed: (SHORT TIA) or FULL TIA. Circle one after answering the questions in Sections II and III below.

****

I. Stated Purpose

Attach to this checklist an explanation of the purpose of the regulation, policy, guideline, court resolution or order.

****

Note: The remainder of this Takings Impact Assessment Checklist should be completed in consultation with the Criminal District Attorney's Office.

II. Potential Effect on Private Real Property

1. Does the county action require a physical invasion, occupation or dedication of real property?

   Yes_____ No __√__

2. Does the county action limit or restrict a real property right, even partially or temporarily?

   Yes_____ No __√__

If you answered yes to either question, go to Section III. If you answered no to both, STOP HERE and circle SHORT TIA at the top of the form.

****

TARRANT COUNTY
COMMISSIONERS COURT COMMUNICATION

Court Date: December 9, 2025	**Court Order #:**	**Page:** 1 of 4
Department: Purchasing	**Prepared By:** Emily Salter, CPPB	**Approved By:** Christopher Lax, CPSM, CPSD, CPCP

SUBJECT:

Euna Solutions, Inc. – Euna Procurement Powered by IonWave - Purchasing

COMMISSIONERS COURT ACTION REQUESTED

It is requested that the Commissioners Court approve Euna Solutions, Inc. as sole source for Euna Procurement Powered by IonWave, for Purchasing, for $65,000.00 and approve contract.

BACKGROUND

Euna Solutions, Inc. provided the Purchasing Agent documentation that they are the only sole source provide of Euna Procurement powered by Ionwave.

This electronic procurement system promotes enhanced supplier engagement and streamlines bidding and evaluation processes, ensuring greater automated efficiencies for procurement. The sole source and contract allow for continued use of the system through purchase of annual license fees, including ongoing maintenance and support.

Under the County Purchasing Act, exemptions to the competitive bidding requirements are allowed for certain types of purchases. The statutes require that the Purchasing Agent advise the Commissioners Court of the existence of only one (1) source, with such notice to be entered into the minutes of the Court.

Accordingly, the above item has been determined to be sole source under the County Purchasing Act 262.024(a)(7) as follows:

> "*(7) an item can be obtained from only one (1) source, including:*
>
> *(A) items for which competition is precluded because of the existence of patents, copyrights, secret processes, or monopolies;*

The term of the contract is effective through January 16, 2029.

The contract is attached for approval and signature. The District Attorney's Office reviewed the contract as to form.

FISCAL IMPACT

Funding in the amount of $65,000.00 is available in account 10000-2026 General Fund/1810410000 Application Development/Support/578025 Software Maintenance and Licenses. Funding in the amount of $68,000.00 and $71,000.00 will be requested in FY 27 and FY 28 budgets.

PASSED AND APPROVED on December 9, 2025.

COUNTY OF TARRANT
STATE OF TEXAS

By: Separate Electronic Signature Page
Tim O'Hare
County Judge

APPROVED AS TO FORM:

_____
District Attorney's Office*

*By law, the District Attorney's Office may only approve contracts for its clients. We reviewed this document as to form from our client's legal perspective. Other parties may not rely on this approval. Instead, those parties should seek contract review from independent counsel.

Attachments

Euna Backup - Need Vendor Signature.pdf

Tarrant County
100 E Weatherford St #303
Fort Worth, TX 76102

November 18th, 2025

dek.prentice@eunasolutions.com
www.eunasolutions.com

USA
1155 Perimeter Center West,
Suite 500
Sandy Springs, GA 30338
CANADA
603 Michigan Drive, Unit 1
Oakville, ON L6L 0G2

Sole Source Designation for Euna Procurement powered by IonWave

To Whom It May Concern,

As it pertains to the Euna Procurement powered by IonWave (IonWave) software solution, Euna Solutions, Inc. (Euna) hereby confirms that we are the sole source for our software and implementation services for our software.

The IonWave software has been developed over the past 20 plus years, specifically for the public sector. The ability to configure our software to meet the requirements and workflows of each public sector organization is unmatched in the industry.

Euna will provide a software subscription for our IonWave software as part of the agreed-upon contract. IonWave is a proprietary software product of Euna Solutions, Inc., and any software, implementation, maintenance, and support services can only be provided by Euna. No other vendor is authorized to provide service or maintenance for this propriety product.

Please contact me with any additional questions.

Sincerely,

Dek Prentice
Renewals Manager
Euna Solutions, Inc.

SAAS AND SERVICES AGREEMENT

This SAAS and Services Agreement, including all documents referenced and incorporated below and the Order Form which by this reference is incorporated herein (collectively, this "**Agreement**"), dated as of 1/17/2026 (the "**Effective Date**"), is by and between Euna Solutions, Inc. (referred to as "**Licensor**" or "**EUNA**," as part of the EUNA brand) and Tarrant County ("**County**"). EUNA and County are sometimes individually referred to as a "**Party**" and collectively referred to as the "**Parties**." The Parties agree as follows:

1. Definitions.

a. "**Diagnositc Data**" means all aggregated and de-identified information that EUNA's systems or applications automatically collect regarding County's use of the SAAS Offering and its performance, including to compile statistical and performance information related to the provision and operation of the SAAS Offering.

b. "**Authorized User**" means County's employees, consultants, contractors, and agents (i) who are authorized by County to access and use the SAAS Offering under the rights granted to County pursuant to this Agreement and the applicable Order Form, and (ii) for whom access to the SAAS Offering has been purchased hereunder.

c. "**Confidential Information**" means any information relating to a Disclosing Party (as defined in Section 9), its business, technology, suppliers, licensors, resellers, distributors, Countys, and third parties to whom the Disclosing Party has an obligation of confidentiality, whether in tangible or intangible form, which is either marked or designated as "confidential" or "proprietary," or disclosed under circumstances indicating its confidential or proprietary nature, or otherwise would be known to be confidential or proprietary by a reasonable person.

d. "**County Data**" means, other than Diagnostic Data, information, data, and other content, in any form or medium, that is submitted, posted, or otherwise transmitted by or on behalf of County or an Authorized User through the SAAS Offering or Professional Services, as applicable.

e. "**Deliverable**" means all documents, work product and other materials that are delivered to County under this Agreement or prepared by or on behalf of the EUNA in the course of performing the Professional Services or providing the SAAS Offering, including any items identified as such in the applicable Order Form.

f. "**Documentation**" means the applicable training, informational or support videos and documentation relating to (i) the use of and access to the SAAS Offering and (ii) any error corrections, bug fixes, enhancements, improvements, new releases, maintenance releases and updates thereto, provided by EUNA to County in any format.

g. "**Fees**" means the fees set forth in the applicable Order Form.

h. "**Intellectual Property Rights**" (i) all United States and foreign patents, patent applications, and certificates of invention, and all continuations, continuations in part, extensions, renewals, divisions, re-issues and re-examinations relating thereto; (ii) all moral rights and copyrights in any work of authorship or other work recognized by applicable Law, including all copyright registrations issued by the United States Register of Copyrights and applications therefor, together with any renewal or extension thereof, or by similar authority in any other jurisdiction, and all rights deriving therefrom; (iii) all, whether registered

or unregistered, trademarks, service marks, domain names, trade names and trade dress, and all goodwill relating thereto; (iv) all rights in all trade secrets, know-how, and confidential information; and (v) other intellectual property rights protectible under any Laws or international conventions throughout the world, and in each case including the right to apply for registrations, certificates, or renewals with respect thereto and the right to prosecute, enforce, obtain damages relating to, settle or release any past, present, or future infringement or misappropriation thereof.

i. "Law" means all applicable laws (including those arising under common law), statutes, codes, rules, regulations, reporting or licensing requirements, ordinances and other pronouncements having the effect of law in the United States, any foreign country or any domestic or foreign state, county, city or other political subdivision, including those promulgated, interpreted or enforced by any governmental or regulatory authority.

j. "**Order Form**" means the order form between the Parties that incorporates this Agreement.

k. "**Public Facing Software**" means a portion of the Software made available by the County to members of the general public.

l. "**SAAS IP**" means the SAAS Offering and the Documentation. For the avoidance of doubt, SAAS IP includes proprietary data structures, database schemas, metadata, Diagnostic Data and any information, data, or other content derived from EUNA's monitoring of County's access to or use of the SAAS IP but does not include County Data.

m. "**SAAS Offering**" means the software-as-a-service offering, including any integrated platform offering, as set out in the applicable Order Form.

n. "**Professional Services**" means the services set out in the applicable Order Form and any associated statement of work attached or referenced in the Order Form ("Statement of Work"), if applicable.

o. "**Term**" has the meaning set forth in Section 10 a.

p. "**Third-Party Products**" means any third-party products described in the applicable Order Form provided with or incorporated into the SAAS Offering.

2. Professional Services. Subject to and conditioned on County's payment of Fees and compliance with all other terms and conditions of this Agreement, EUNA shall provide to County the Professional Services in accordance with the applicable Order Form and Statement of Work.

3. Software Subscription.

a. Provision of Access. Subject to and conditioned on County's payment of Fees and compliance with all other terms and conditions of this Agreement, EUNA hereby grants County a non-exclusive, non-sublicensable, non-transferable (except in compliance with Section 22) right to access and use the SAAS Offering during the Term, solely for use by Authorized Users in accordance with the terms and conditions herein. Such use is limited to County's internal use. EUNA shall provide to County the necessary information to allow County to access the SAAS Offering. The total number of Authorized Users will not exceed the number set forth in the applicable Order Form, except as expressly agreed to in writing by the Parties and subject to any appropriate adjustment of the Fees payable hereunder.

b. Public Facing Software. Notwithstanding the definition of Authorized Users, County is permitted to provide access to its constituents that are solely utilizing public facing functionalities of the SAAS Offering that do not otherwise require a specific license from EUNA.

c. Documentation License. Subject to and conditioned on County's payment of Fees and compliance with the terms and conditions of this Agreement, EUNA hereby grants to County a non-exclusive, non-sublicensable, non-transferable (except in compliance with Section 22) license to use the Documentation during the Term solely for County's internal business purposes in connection with its use of the SAAS Offering.

d. Optional Features. EUNA shall provide all extensions, enhancements, and other changes, which are logical improvements to the SAAS Offering and to which EUNA makes generally available on a commercial basis, without charge, to other licensees of the EUNA SAAS Offering. Updates do not include any new software products that are then made generally available on a commercial basis as separate, price-listed options or additions to the SAAS Offering nor do they include any Professional Services that may be required for implementation.

e. Use Restrictions. County shall not use the SAAS Offering for any purposes beyond the scope of the access granted in this Agreement or the applicable Order Form. County shall not at any time, directly or indirectly, and shall not permit any Authorized Users to: (i) copy, modify, or create derivative works of the SAAS Offering or Documentation, in whole or in part; (ii) rent, lease, lend, sell, license, sublicense, assign, distribute, publish, transfer, or otherwise make available the SAAS Offering or Documentation to a third party; (iii) reverse engineer, disassemble, decompile, decode, adapt, or otherwise attempt to derive or gain access to any software component of the SAAS Offering, in whole or in part; (iv) remove any proprietary notices from the SAAS Offering or Documentation; or (v) use the SAAS Offering or Documentation in any manner or for any purpose that causes such SAAS Offering or Documentation to infringe, misappropriate, or otherwise violate any Intellectual Property Right or other right of any person, or that violates any applicable Law.

f. Suspension. Notwithstanding anything to the contrary in this Agreement, EUNA may temporarily suspend County's and any Authorized User's access to any portion or all of the SAAS Offering if: (i) EUNA reasonably determines that (A) there is a threat or attack on any of the SAAS IP; (B) County's or any Authorized User's use of the SAAS IP disrupts or poses a security risk to the SAAS IP or to any other County or vendor of EUNA; (C) County or any Authorized User is using the SAAS IP for fraudulent or illegal activities; (D) subject to applicable Law, County has ceased to continue its business in the ordinary course, made an assignment for the benefit of creditors or similar disposition of its assets, or become the subject of any bankruptcy, reorganization, liquidation, dissolution, or similar proceeding; or (E) EUNA's provision of the SAAS Offering to County or any Authorized User is prohibited by applicable Law; (ii) any vendor of EUNA has suspended or terminated EUNA's access to or use of any third-party services or products required to enable County to access or use the SAAS Offering each a ("**Service Suspension**"). EUNA shall use commercially reasonable efforts to resume providing access to the SAAS Offering as soon as reasonably possible after the event giving rise to the Service Suspension is investigated, contained, remediated, and cured. EUNA will have no liability for any damage, liabilities, losses (including any loss of data or profits), or any other consequences that County or any Authorized User may incur as a result of a Service Suspension.

g. Diagnostic Data. Notwithstanding anything to the contrary in this Agreement, EUNA may monitor County's use of the SAAS Offering and collect and compile Diagnostic Data. As between EUNA and County, all right, title, and interest in Diagnostic Data, and all Intellectual Property Rights therein, belong to and are retained solely by EUNA. County acknowledges that EUNA may compile Diagnostic Data based on County Data input into the SAAS Offering. County agrees that EUNA may (i) make

Diagnostic Data publicly available in compliance with applicable Law, and (ii) use Diagnostic Data to the extent and in the manner permitted under applicable Law. EUNA agrees to process County Data available in accordance with EUNA's privacy policy which is included below as Exhibit C..

4. County Obligations.

a. For Professional Services. In connection with the Professional Services, County shall:

(i) cooperate with EUNA in its performance of the Professional Services and provide access to County's premises, employees, contractors, and equipment as required to enable EUNA to provide the Professional Services;

(ii) provide Cooperation, as defined herein, and perform County facing milestones and County deliverables necessary to enable EUNA to continue to perform under the Order Form and Statement of Work; and

(iii) take all steps necessary, including obtaining any required licenses or consents, to prevent County-caused delays in EUNA's provision of the Professional Services.

b. For the SAAS Offering. In connection with the SAAS Offering:

(i) County agrees to be responsible and liable for all uses of the SAAS Offering and Documentation resulting from access provided by County, directly or indirectly, whether such access or use is permitted by or in violation of this Agreement. Without limiting the generality of the foregoing, County agrees to be responsible for all acts and omissions of Authorized Users, and any act or omission by an Authorized User that would constitute a breach of this Agreement if taken by County will be deemed a breach of this Agreement by County. County shall use reasonable efforts to make all Authorized Users aware of this Agreement's provisions as applicable to such Authorized User's use of the SAAS Offering and shall cause Authorized Users to comply with such provisions.

(ii) EUNA may from time to time make Third-Party Products available to County. For purposes of this Agreement, such Third-Party Products are subject to their own terms and conditions and the applicable flow-through provisions.

(iii) EUNA will use commercially reasonable efforts to implement the SAAS Offering. County acknowledges and agrees that County's timely provision of (and EUNA's access to) County's assistance, cooperation, and complete and accurate feedback, approvals, information, and data from County's officers, agents and employees as is reasonably requested by EUNA (collectively, "**Cooperation**") is essential to the implementation and operation of the SAAS Offering, and that EUNA shall not be liable for any deficiency, delay or failure in implementing or operating the SAAS Offering if such deficiency, delay or failure results from County's failure to provide full Cooperation as required hereunder. Cooperation will include designating a project manager to interface with EUNA during the course of EUNA's implementation or provision of the SAAS Offering. If County repeatedly fails to provide Cooperation, EUNA may terminate this Agreement in accordance with Section 10(b)(ii).

5. Fees and Expenses.

a. Fees. Except for Fees that County has successfully disputed, County shall pay the Fees without offset or deduction. In accordance with the Prompt Payment Act, it is the intention of Tarrant County to make payment on completed orders within thirty (30) days after receipt of invoice or items; whichever is later (notwithstanding SaaS Subscription fees billed annually in advance), unless unusual circumstances

arise. Invoices must be fully documented as to labor, materials, and equipment provided and must reference the Tarrant County purchase order number in order to be processed. No payments shall be made on invoices not itemized or those invoices which do not list a purchase order number.

b. Taxes. Fees do not include any taxes. County is exempt by Law from payment of State and local sales tax and federal excise tax. In the event that taxes are assessed by any governmental body on any Deliverable provided under this Agreement, in which County is not exempted from paying, EUNA shall have the option to terminate the Agreement in lieu of assessment of the taxes against EUNA, provided however that County shall have the option to pay EUNA all such tax amounts which have been properly invoiced, at County's discretion, to avoid termination of this Agreement. County shall provide EUNA with a valid tax exemption certificate upon request.

6. Service Levels and Support.

a. Service Levels. Subject to and conditioned upon County's payment of Fees and compliance with the terms and conditions of this Agreement, EUNA will use commercially reasonable efforts to make the SAAS Offering available in accordance with the service levels set out in the provided service level documentation in Exhibit B. (the "**Euna Solutions General Service Level Agreement (SLA)**").

b. Support. Subject to and conditioned upon County's payment of Fees and compliance with the terms and conditions of this Agreement, EUNA will use commercially reasonable efforts to provide the support services described in the support services documentation in Exhibit B. (the "**Euna Solutions General Service Level Agreement (SLA)**").

c. Updates. EUNA reserves the right to modify the Service Level Policy and Support Services Policy from time to time. Any updates will be provided to County and become effective upon signature of both parties.County. County acknowledges and agrees that, as between County and EUNA, County shall be solely responsible to provide any and all support to all other third parties. Unless otherwise stated in the Service Level Policy, EUNA shall not have any obligation to provide support services to any third parties.

7. Representations, Limited Warranties, and Disclaimer.

a. Representations. Each Party hereby represents and warrants that: (i) it has the full corporate right, power and authority to enter into this Agreement and to perform the acts required hereunder; and (ii) the execution of this Agreement by such Party, and the performance by such Party of its obligations and duties hereunder, do not and will not violate any agreement to which such Party is bound or any obligation of such Party.

b. Warranties for Professional Services. EUNA warrants that it will perform the Professional Services:

(i) in accordance with the terms and subject to the conditions set out in the respective Statement of Work or Order Form and this Agreement;

(ii) using personnel of commercially reasonable skill, experience, and qualifications; and

(iii) in a timely, workmanlike, and professional manner in accordance with generally recognized industry standards for similar services.

c. Warranties for the SAAS Offering. EUNA warrants that during the Term, the SAAS Offering will conform in all material respects to the Documentation when accessed and used in accordance with the

Documentation. EUNA does not make any warranties, representations or guarantees regarding uptime or availability of the SAAS Offering except to the extent specifically included in the applicable Service Level Policy. THE FOREGOING WARRANTIES, REPRESENTATIONS AND GUARANTEES DO NOT APPLY AND EUNA STRICTLY DISCLAIMS ALL WARRANTIES, REPRESENTATIONS AND GUARANTEES WITH RESPECT TO ANY THIRD-PARTY PRODUCTS OR ANY FAILURE IN PERFORMANCE CAUSED BY THIRD-PARTY PRODUCTS.

d. Remedies. EUNA's sole and exclusive liability and County's sole and exclusive remedy for breach of the warranties, representations and guarantees in this Agreement shall be as follows:

(i) EUNA shall use reasonable commercial efforts to promptly cure any such breach; provided, that if EUNA cannot cure such breach within sixty (60) days after County's written notice of such breach, County may, at its option, terminate this Agreement by serving written notice of termination.

(ii) For Professional Services, County's remedy for breach of the foregoing warranties, representations and guarantees shall be the re-performance of the relevant Professional Services free of charge to the extent the breach was caused solely by EUNA. The foregoing remedy shall not be available unless County provides written notice of such breach (which notice reasonably describes the breach and the deficiencies identified by County) within thirty (30) days after delivery of such Professional Service or Deliverable to County.

(iii) For any such breach involving a failure to meet the commitments in the Service Level Policy, EUNA's sole obligation and County's exclusive remedy shall be for EUNA to perform the remedies set forth in the Service Level Policy.

e. Disclaimer of Warranties. EXCEPT FOR THE LIMITED WARRANTIES SET FORTH IN THIS SECTION OF THE AGREEMENT, THE PROFESSIONAL SERVICES, DELIVERABLES, SAAS OFFERING AND EUNA IP ARE PROVIDED "AS IS" AND EUNA HEREBY DISCLAIMS ALL WARRANTIES, REPRESENTATIONS AND GUARANTEES WHETHER EXPRESS, IMPLIED, STATUTORY, OR OTHERWISE. EUNA SPECIFICALLY DISCLAIMS ALL IMPLIED WARRANTIES OF MERCHANTABILITY, FITNESS FOR A PARTICULAR PURPOSE, TITLE, AND NON-INFRINGEMENT, AND ALL WARRANTIES ARISING FROM COURSE OF DEALING, USAGE, OR TRADE PRACTICE. EXCEPT FOR THE LIMITED WARRANTIES SET FORTH IN THIS SECTION, EUNA MAKES NO WARRANTY, REPRESENTATION OR GUARANTEE OF ANY KIND THAT THE PROFESSIONAL SERVICES, DELIVERABLES, EUNA IP, OR ANY PRODUCTS OR RESULTS OF THE USE THEREOF, WILL MEET COUNTY'S, AN AUTHORIZED USER'S, OR ANY OTHER PERSON'S REQUIREMENTS, OPERATE WITHOUT INTERRUPTION, ACHIEVE ANY INTENDED RESULT, BE COMPATIBLE OR WORK WITH ANY SOFTWARE, SYSTEM, OR OTHER PROFESSIONAL, OR BE SECURE, ACCURATE, COMPLETE, FREE OF HARMFUL CODE, OR ERROR FREE.

8. Intellectual Property.

a. Deliverables. All Intellectual Property Rights in and to the Deliverables except for any Confidential Information of County shall be owned by EUNA. If any derivative work is created by County from the SaaS Offering EUNA shall own all right, title and interest in and to such derivative work.

b. SAAS IP and Documentation. County acknowledges that, as between County and EUNA, EUNA owns all right, title, and interest, including all Intellectual Property Rights, in and to the SAAS IP and Documentation and, with respect to Third-Party Products, the applicable third-party providers own all right, title, and interest, including all Intellectual Property Rights, in and to the Third-Party Products.

c. County Data. EUNA acknowledges that, as between EUNA and County, County either (i) owns all right, title, and interest, including all Intellectual Property Rights, in and to the County Data, or (ii) has a valid license with the right to sublicense the County Data to EUNA as provided herein. County hereby grants to EUNA a non-exclusive, royalty-free, worldwide license to reproduce, distribute, and otherwise use and display the County Data and perform all acts with respect to the County Data as may be necessary for EUNA to provide the SAAS Offering to County, and a non-exclusive, perpetual, irrevocable, royalty-free, worldwide license to reproduce, distribute, modify, and otherwise use and display County Data incorporated within the Diagnostic Data. County represents, warrants and agrees that: (A) it will comply with applicable Law, including the Laws of the territories and jurisdictions from which any County Data is obtained or pertains, in collecting, using, disclosing, transmitting and in soliciting the transmission of County Data into or with the SAAS Offering as contemplated under this Agreement; (B) prior to transmitting (or soliciting the transmission of) any County Data to EUNA through the SAAS Offering, County shall have all applicable consents and approvals required for the transmission of such County Data to EUNA; and (C) EUNA's use, storage, disclosure and other processing of County Data in accordance with this Agreement or County's instructions or direction will not cause EUNA or any of its vendors to violate any applicable Law or infringe the rights of any individual or third party.

d. Passwords. County is responsible for the confidentiality and use of its passwords, other credentials, and account, and in no event shall EUNA be liable for any loss of information of County or other claims arising from unauthorized access to the SAAS Offering as a result of the failure by County to protect the confidentiality of its passwords, other credentials or account.

e. Prohibited Information. Except as necessary to utilize the SAAS Offering, County shall not transmit, disclose or otherwise provide (or cause or allow to be transmitted or provided to EUNA): (i) health information, medical information, health insurance card information, policy identification numbers, or any other information that would cause EUNA to be classified as a "business associate" under the Health Insurance Portability and Accountability Act of 1996, as amended ("HIPAA") or similar designation under other Laws, (ii) information that causes EUNA to be subject to any Laws beyond those Laws generally applicable to all cloud service providers, (iii) security passwords or credentials, and/or (iv) data revealing race, ethnicity, political opinions, religion, sexual orientation, philosophical beliefs or trade union membership or any other information identified under applicable Law as "sensitive information," "private information," or like designation (collectively, "**Prohibited Information**"). If County transmits or provides to EUNA any Prohibited Information, EUNA shall have no liability or obligation whatsoever with respect to such Prohibited Information or County Data provided to EUNA.

f. Feedback. If County or any of its employees or contractors provides, sends or transmits any communications or materials to EUNA by mail, email, telephone, or otherwise, suggesting or recommending changes to the SAAS Offering, Documentation, Software, Professional Services, or any of EUNA's Intellectual Property Rights, including without limitation, the SAAS IP and new features or functionality relating thereto, or any comments, questions, suggestions, or the like ("**Feedback**"), EUNA is free to use such Feedback irrespective of any other obligation or limitation between the Parties governing such Feedback. County hereby assigns and agrees to assign to EUNA, and will cause its employees, contractors and/or agents to assign to EUNA, all right, title, and interest in and to the Feedback, including all Intellectual Property Rights in the Feedback, to EUNA without further consideration. EUNA is free to use, without any attribution or compensation to any party, any ideas, know-how, concepts, techniques, or other Intellectual Property Rights contained in the Feedback, for any purpose whatsoever, although EUNA is not required to use any Feedback.

g. Reservation of Rights. EUNA reserves all rights not expressly granted to County in this Agreement. Except for the limited rights and licenses expressly granted under this Agreement, nothing in

this Agreement grants, by implication, waiver, estoppel, or otherwise, to County or any third party any Intellectual Property Rights or other right, title, or interest in or to the Professional Services or SAAS IP.

9. Confidentiality.

a. Generally. From time to time during the Term, either Party (as the "**Disclosing Party**") may disclose or make available to the other Party (as the "**Receiving Party**") Confidential Information. Confidential Information shall at all times remain the property of the Disclosing Party. The Receiving Party shall: (A) protect and safeguard the confidentiality of the Disclosing Party's Confidential Information with at least the same degree of care as the Receiving Party protects its own Confidential Information, but in no event with less than a commercially reasonable degree of care; (B) not use the Disclosing Party's Confidential Information, or permit it to be accessed or used, for any purpose other than to exercise its rights or perform its obligations under this Agreement; and (C) except as permitted in this Agreement, not disclose any such Confidential Information to any person or entity, except to the Receiving Party's representatives (including EUNA's affiliates and third party service providers) who need to know the Confidential Information to assist the Receiving Party, act on its behalf, or to exercise its rights or perform its obligations under this Agreement. The obligations in this section do not apply to Confidential Information that: (i) is or becomes generally available to the public other than as a result of the Receiving Party's breach of this Section; (ii) is or becomes available to the Receiving Party on a non-confidential basis from a third-party source, provided that such third party is not and was not prohibited from disclosing such Confidential Information; (iii) was in the Receiving Party's possession prior to the Disclosing Party's disclosure hereunder; or (iv) was or is independently developed by the Receiving Party without using any Confidential Information of the Disclosing Party.

b. Permitted Disclosures. Notwithstanding the foregoing, each Party may disclose Confidential Information to the limited extent required to establish a Party's rights under this Agreement, including to make required court filings or in accordance with the Texas Public Information Act. If a Receiving Party is faced with a law, regulation judicial or governmental action to disclose Confidential Information of the Disclosing Party, the Receiving Party must, if legally permissible, notify the Disclosing Party forthwith and, at the Disclosing Party's request, provide reasonable assistance in opposing such action at the Disclosing Party's cost and expense.

c. Destruction. On the expiration or termination of the Agreement, the Receiving Party shall promptly destroy all copies of the Disclosing Party's Confidential Information in its possession or control and upon request certify in writing to the Disclosing Party that such Confidential Information has been destroyed, provided, however, that a Receiving Party may retain Confidential Information relevant to any pending or threatened litigation or governmental investigation and EUNA may retain County's Confidential Information in accordance with its information retention policies and Section 15.a, below.

d. Irreparable Harm. Each Party acknowledges that Confidential Information may constitute unique, valuable, proprietary and trade secret information of the Disclosing Party, and that unauthorized disclosure thereof by the Receiving Party may cause irreparable injury to the Disclosing Party. Accordingly, each Party acknowledges and agrees that monetary damages may not be adequate in the event of a default of this Article 9 and, therefore, that the Disclosing Party may be entitled to injunctive or other affirmative relief, without such constituting an election of remedies, and that the Disclosing Party will not be required to obtain, furnish or post any bond or similar instrument in connection with or as a condition to obtaining any remedy referred to in this Article 9, and each Party irrevocably waives any right it may have to require the obtaining, furnishing or posting of any such bond or similar instrument.

e. Duration. Each Party's obligations of non-disclosure with regard to Confidential Information are effective as of the Effective Date and will expire five years from the date first disclosed to the Receiving

Party; provided, however, with respect to any Confidential Information that constitutes a trade secret (as determined under applicable Law), such obligations of non-disclosure will survive the termination or expiration of this Agreement for as long as such Confidential Information remains subject to trade secret protection under applicable Law.

f. Texas Government Code Chapter 552 ("Texas Public Information Act" or "TPIA"). The County advises EUNA that the County is a governmental body under Chapter 552 of the Texas Government Code and that certain information that is collected, assembled, or maintained in connection with the transaction of official business by a governmental body is considered public information potentially subject to disclosure pursuant to a valid Texas Public Information Act ("TPIA") request. EUNA's trade secrets, certain financial information, and proprietary information may be subject to an exception to disclosure under Chapter 552 of the Texas Government Code, Subchapter C. If a TPIA request is made on the County to disclose EUNA information that may be subject to an exception from disclosure, County will (i) promptly notify EUNA of such request for disclosure, and (ii) decline to release such information and file a written request with the Texas Attorney General's office seeking a determination as to whether such information may be withheld.

g.

10. Term, Termination, and Survival.

a. Term. The term of this Agreement (the "**Term**") commences on the Effective Date of this Agreement and will continue in effect for as long as there is an outstanding Order Form in place. Each Order Form will continue for the applicable term listed in such Order Form until terminated by either Party in accordance with this Agreement. The termination or expiration of an Order Form will not affect or otherwise terminate this Agreement or any other Order Form covering other products or services in effect at such time.

b. User Subscriptions. User subscriptions in an Order Form shall extend only for the subscription term listed on the Order Form. Any renewal of subscriptions shall require the mutual written agreement of the parties.The per-unit pricing during any such renewal term of the subscription shall be the same as that during the prior term unless EUNA gives written notice of a pricing increase at least thirty (30) days before the end of such prior term, in which case the pricing increase shall be effective upon renewal and thereafter.

c. Termination for Convenience. County may terminate this Agreement without cause by giving thirty (30) days advance written notice to EUNA of its election to terminate this Agreement pursuant to this provision. In the event of such termination, County agrees to pay a "**SaaS Recovery Amount**" equivalent to 50% of the subscription fees for the remainder of the initial term of the Order Form.

d. Termination for Cause. In addition to any other express termination right set forth in this Agreement:

(i) either Party may terminate this Agreement, effective on written notice to the other Party, if the other Party materially breaches this Agreement, and such breach: (A) is incapable of cure; or (B) being capable of cure, remains uncured thirty (30) days after the non-breaching Party provides the breaching Party with written notice of such breach; or

(ii) either Party may terminate this Agreement, effective immediately upon written notice to the other Party, if the other Party: (A) becomes insolvent or is generally unable to pay, or fails to pay, its debts as they become due; (B) files or has filed against it, a petition for voluntary or involuntary bankruptcy or otherwise becomes subject, voluntarily or involuntarily, to any proceeding under any domestic or foreign

bankruptcy or insolvency Law; (C) makes or seeks to make a general assignment for the benefit of its creditors; or (D) applies for or has appointed a receiver, trustee, custodian, or similar agent appointed by order of any court of competent jurisdiction to take charge of or sell any material portion of its property or business.

e. Effect of Expiration or Termination. Upon expiration or earlier termination of this Agreement, EUNA will immediately cease providing any Professional Services and County shall immediately discontinue use of the SAAS Offering. No expiration or termination will affect County's obligation to pay all Fees that may have become due before such expiration or termination or entitle County to any refund.

f. Non-Appropriation. In the event County is not granted an appropriation of funds at any time during the Term and the non–appropriation did not result from an act or omission by County, County shall have the right to terminate this Agreement on the last day of the fiscal period for which appropriations were received without penalty or expense to County, except as to the portion of the payments for which fund shall have been appropriated and budgeted. At least ninety (90) days prior to the end of County's fiscal period, County shall certify in writing that (1) funds have not been appropriated for the next fiscal period, (b) such non-appropriation did not result from any act or failure to act by County; and (c) County has exhausted all funds legally available to pay EUNA. If County terminates this Agreement because of non-appropriation of funds, County may not purchase or lease during the subsequent fiscal period, software and/or service performing the same function as, or functions taking the place of those performed by the software and/or service provided by EUNA; however, that these restrictions shall not be applicable if or to the extent that the application of these restrictions would affect the validity of this Agreement.

g. Survival. Sections 3.g, 4, 5, 7, 8, 9, 10, 11, 12, and 14-34 survive any termination or expiration of this Agreement. No other provisions of this Agreement survive the expiration or earlier termination of this Agreement.

11. Indemnification.

a. EUNA Indemnification.

(i) EUNA SHALL INDEMNIFY, DEFEND, AND HOLD HARMLESS COUNTY FROM AND AGAINST ANY AND ALL LOSSES, DAMAGES, LIABILITIES, COSTS (INCLUDING REASONABLE ATTORNEYS' FEES) ("**LOSSES**") INCURRED BY COUNTY RESULTING FROM ANY THIRD-PARTY CLAIM, SUIT, ACTION, OR PROCEEDING ("**THIRD-PARTY CLAIM**") THAT THE SAAS OFFERING OR PROFESSIONAL SERVICES, OR ANY USE OF THE SAAS OFFERING OR PROFESSIONAL SERVICES IN ACCORDANCE WITH THIS AGREEMENT, INFRINGES OR MISAPPROPRIATES SUCH THIRD PARTY'S INTELLECTUAL PROPERTY RIGHTS, PROVIDED THAT COUNTY PROMPTLY NOTIFIES EUNA IN WRITING OF SUCH THIRD-PARTY CLAIM, COOPERATES WITH EUNA, AND ALLOWS EUNA SOLE AUTHORITY TO CONTROL THE DEFENSE AND SETTLEMENT OF SUCH THIRD-PARTY CLAIM.

(ii) If a Third-Party Claim is made or appears possible, County agrees to permit EUNA, at EUNA's sole discretion, to (A) modify or replace the SAAS Offering or Professional Services or component or part thereof, to make it non-infringing, (B) obtain the right for County to continue use, or (C) terminate the license for the SAAS Offering and Professional Services and provide a pro rata refund to County. If EUNA determines that none of these alternatives is reasonably available, EUNA may terminate this Agreement, in its entirety or with respect to the affected component or part, effective immediately on written notice to County.

(iii) This Section will not apply to the extent that the alleged infringement arises from: (A) use of the SAAS Offering or Professional Services in combination with data, software, hardware, equipment, or technology not provided by EUNA or authorized by EUNA in writing; (B) modifications to the SAAS Offering or Professional Services not made by EUNA; or (C) County Data; or (D) Third-Party Products.

b. County Indemnification. INTENTIONALLY OMITTED

c. Sole Remedy. THIS SECTION SETS FORTH COUNTY'S SOLE REMEDIES AND EUNA'S SOLE LIABILITY AND OBLIGATION FOR ANY ACTUAL, THREATENED, OR ALLEGED CLAIMS THAT THE PROFESSIONAL SERVICES OR SAAS OFFERING INFRINGES, MISAPPROPRIATES, OR OTHERWISE VIOLATES ANY INTELLECTUAL PROPERTY RIGHTS OF ANY THIRD PARTY.

12. Limitation of Liability.

a. IN NO EVENT SHALL EUNA BE LIABLE TO COUNTY OR TO ANY THIRD PARTY FOR ANY LOSS OF USE, REVENUE, OR PROFIT OR LOSS OF DATA OR DIMINUTION IN VALUE, OR FOR ANY CONSEQUENTIAL, INCIDENTAL, INDIRECT, EXEMPLARY, SPECIAL, OR PUNITIVE DAMAGES WHETHER ARISING OUT OF BREACH OF CONTRACT, TORT (INCLUDING NEGLIGENCE), OR OTHERWISE, REGARDLESS OF WHETHER SUCH DAMAGE WAS FORESEEABLE AND WHETHER OR NOT EUNA HAS BEEN ADVISED OF THE POSSIBILITY OF SUCH DAMAGES, AND NOTWITHSTANDING THE FAILURE OF ANY AGREED OR OTHER REMEDY OF ITS ESSENTIAL PURPOSE.

b. IN NO EVENT SHALL EUNAS AGGREGATE LIABILITY ARISING OUT OF OR RELATED TO THIS AGREEMENT, WHETHER ARISING OUT OF OR RELATED TO BREACH OF CONTRACT, TORT (INCLUDING NEGLIGENCE), OR OTHERWISE, EUNA'S INSURANCE COVERAGE POLICY LIMITS AS STATED IN SECTION 35. ADDITIONALLY, IN NO EVENT WILL EUNA BE LIABLE FOR ANY CLAIM BROUGHT BY COUNTY MORE THAN ONE (1) YEAR AFTER THE CAUSE OF ACTION AROSE OR REASONABLY SHOULD HAVE BEEN DISCOVERED.

c. UNDER NO CIRCUMSTANCES SHALL EUNA HAVE ANY LIABILITY OR RESPONSIBILITY FOR THE ACCURACY OF ANY COUNTY DATA THAT IS INPUTTED INTO THE SAAS OFFERING.

13. Press Release. Intentionally Omitted

14. Information Security. Intentionally Omitted

15. Export of Data.

a. County Data. Upon termination, cancellation, expiration, or other conclusion of this Agreement, County may request that EUNA remove County Data from EUNA's production systems. County acknowledges that as part of a commercially reasonable backup strategy, EUNA does maintain long term archival backups that may continue to contain County Data after termination of this Agreement. EUNA agrees not to utilize such archival backups for the specific purpose of accessing County Data after termination of this Agreement, unless specifically authorized to do so by County.

b. Data Extraction. During the Term of this Agreement, County may utilize the standard functionality of the SAAS Offering for its intended purpose, including the ability to download data and

copies of documents loaded into or generated by the SAAS Offering. County shall have the right to retain a copy of all downloaded documents. During the Term of and within thirty (30) days following termination of this Agreement, County may request EUNA to provide consulting services to County in order to perform a custom extract of County data from the SAAS Offering. EUNA will provide the requested consulting services for an hourly rate set forth in the Order Form or Statement of Work. Custom data extracts will be provided electronically in a text delimited flat file format (or other mutually acceptable format) and will be scrubbed of all EUNA proprietary data structures. County and EUNA will work together to determine a list of the specific data elements to be provided, at which point EUNA will provide an estimate of the time required to extract the data. Once the estimate has been provided, if County wishes EUNA to proceed with the data extract, County will make a mobilization payment of fifty percent (50%) of the estimated amount to EUNA. After receipt of this payment, EUNA will then have thirty (30) days to deliver the data extracts to County. County shall have thirty (30) days upon receipt of the data to review for acceptance. Upon acceptance, EUNA will provide County with a final accounting of hours and County shall be responsible for payment of the additional consulting fees.

16. Authorized Reseller Status; Option to Purchase Affiliate Products. GTY Technology Holdings Inc. is the parent company to multiple other SaaS companies under the Euna brand, including Euna Solutions, Inc. in the U.S. (such subsidiaries, "Affiliates"). These Affiliates sell purpose-built products and services for the public sector ("Affiliate Products"). As of the Effective Date, Affiliates include Euna Solutions Inc., CityBase Inc., and Streamlink Software Inc. dba Amplifund. In addition to the products and services that are the subject of this Agreement, County has the option to purchase from either Euna, as an authorized reseller, or Affiliates, the Affiliate Products on same terms of the Agreement. Notwithstanding the foregoing, County understands that different order forms, statement of work(s), and product specific service level agreements may apply. County will be provided the Affiliate's additional product terms and will have the opportunity to review and consent to such terms.

17. Entire Agreement. This Agreement, including and together with the Order Form referencing this SAAS and Services Agreement, and any Statements of Work, policies, and other documents referenced and incorporated herein or in the Order Form, constitutes the sole and entire agreement of the Parties with respect to the subject matter contained herein, and supersedes all prior and contemporaneous understandings, agreements, representations and warranties, both written and oral, regarding such subject matter. The Parties acknowledge and agree that if there is any conflict between the terms and conditions of this Agreement and the terms and conditions of any Order Form, the Order Form followed by the Service Level Policy shall supersede and control. To the extent the Order Form links to legal terms other than this SAAS and Services Agreement or a Statement of Work, those terms shall not apply.

18. Notices. All notices, requests, consents, claims, demands, waivers and other communications under this Agreement must be in writing and addressed to the other Party at its address in the Order Form (or to such other address that the receiving Party may designate from time to time in accordance with this Section). For Notices to EUNA, legal@eunasolutions.com shall be sent a courtesy email notification. Unless otherwise agreed herein, all Notices must be delivered by personal delivery, nationally recognized overnight courier or certified or registered mail (in each case, return receipt requested, postage prepaid). Except as otherwise provided in this Agreement, a Notice is effective only (a) on receipt by the receiving Party; and (b) if the Party giving the Notice has complied with the requirements of this Section.

19. Severability. If any term or provision of this Agreement is found by a court of competent jurisdiction to be invalid, illegal or unenforceable in any jurisdiction, such invalidity, illegality or unenforceability shall not affect any other term or provision of this Agreement or invalidate or render unenforceable such term or provision in any other jurisdiction. Upon a determination that any term or provision is invalid, illegal or unenforceable, the court may modify this Agreement to effect the original

intent of the Parties as closely as possible in order that the transactions contemplated hereby be consummated as originally contemplated to the greatest extent possible.

20. Amendments. No amendment to or modification of this Agreement is effective unless it is in writing and signed by an authorized representative of each Party.

21. Waiver. No waiver by any Party of any of the provisions of this Agreement shall be effective unless explicitly set forth in writing and signed by the Party so waiving. Except as otherwise set forth in this Agreement, no failure to exercise, or delay in exercising, any right, remedy, power or privilege arising from this Agreement shall operate or be construed as a waiver thereof, nor shall any single or partial exercise of any right, remedy, power or privilege hereunder preclude any other or further exercise thereof or the exercise of any other right, remedy, power or privilege.

22. Assignment. Neither Party shall assign, transfer, delegate or subcontract any of its rights or delegate any of its obligations under this Agreement without the prior written consent of the other Party. Any purported assignment or delegation in violation of this Section shall be null and void. No assignment or delegation shall relieve County of any of its obligations under this Agreement. Notwithstanding the foregoing, EUNA may assign this Agreement and any of its rights or delegate any of its obligations to any affiliate, subsidiary, or to any person acquiring all or substantially all of EUNA's assets without County's consent.

23. Successors and Assigns. This Agreement is binding on and inures to the benefit of the Parties to this Agreement and their respective permitted successors and permitted assigns.

24. Relationship of the Parties. The relationship between the Parties is that of independent contractors. The details of the method and manner for performance of the Services by EUNA shall be under its own control, County being interested only in the results thereof. EUNA shall be solely responsible for supervising, controlling, and directing the details and manner of the completion of the Professional Services and the provision of the SAAS Offering. Nothing in this Agreement shall give County the right to instruct, supervise, control, or direct the details and manner of the completion of the Professional Services or the provision of the SAAS Offering. Nothing contained in this Agreement shall be construed as creating any agency, partnership, joint venture or other form of joint enterprise, employment or fiduciary relationship between the Parties, and neither Party shall have authority to contract for or bind the other Party in any manner whatsoever.

25. No Third-Party Beneficiaries. This Agreement benefits solely the Parties to this Agreement and their respective permitted successors and assigns and nothing in this Agreement, express or implied, confers on any other person any legal or equitable right, benefit, or remedy of any nature whatsoever under or by reason of this Agreement.

26. Choice of Law. This Agreement and all related documents, and all matters arising out of or relating to this Agreement, whether sounding in contract, tort, or statute are governed by, and construed in accordance with, the Laws of the State of Texas, United States of America, without giving effect to the conflict of laws provisions thereof to the extent such principles or rules would require or permit the application of the Laws of any jurisdiction other than those of the State of Texas, United States of America.

27. Choice of Forum. Each Party irrevocably and unconditionally agrees that it will not commence any action, litigation or proceeding of any kind whatsoever against the other Party in any way arising from or relating to this Agreement, including all exhibits, schedules, attachments and appendices attached to this Agreement, and all contemplated transactions, including contract, equity, tort, fraud and statutory claims, in any forum other than the State or Federal District courts of Fort Worth County, Texas, and any appellate

court from any thereof. Each Party irrevocably and unconditionally submits to the exclusive jurisdiction of such courts and agrees to bring any such action, litigation or proceeding only in the State or Federal District courts of Fort Worth, Texas. Each Party agrees that a final judgment in any such action, litigation, or proceeding is conclusive and may be enforced in other jurisdictions by suit on the judgment or in any other manner provided by law.

28. Export Regulation. County shall comply with all applicable Laws, and complete all required undertakings (including obtaining any necessary export license or other governmental approval), that prohibit or restrict the export or re-export of the SAAS Offering or any County Data outside the US.

29. WAIVER OF JURY TRIAL. Intentionally Omitted

30. Counterparts. This Agreement may be executed in counterparts, each of which is deemed an original, but all of which together are deemed to be one and the same agreement. A signed copy of this Agreement delivered by facsimile, email, or other means of electronic transmission is deemed to have the same legal effect as delivery of an original signed copy of this Agreement.

31. Force Majeure. "**Force Majeure Events**" means events beyond a Party's reasonable control, including without limitation acts of nature, labor disputes, the stability or availability of the Internet or a portion thereof, actions by a governmental authority (such as a moratorium on any activities related to this Agreement or changes in Laws), telecommunication or Internet network failures or brown-outs, failures or unavailability of third party systems, networks or software, flood, earthquake, fire, lightning, epidemics, war, acts of terrorism, riots, civil disturbances, sabotage, power grid failures, and denial of service attacks. Neither Party shall be liable for any loss, damage or penalty resulting from delays or failures in performance resulting from Force Majeure Events (except for any obligations of County to make payments to EUNA hereunder). The Party affected by the Force Majeure Event will promptly notify the other Party and will resume performance when the Force Majeure Event is no longer effective and the impact has been remediated.

32. Equitable Relief. Each Party acknowledges and agrees that a breach or threatened breach by such Party of any of its obligations would cause the other Party irreparable harm for which monetary damages would not be an adequate remedy and agrees that, in the event of such breach or threatened breach, the other Party will be entitled to equitable relief, including a restraining order, an injunction, specific performance, and any other relief that may be available from any court, without any requirement to post a bond or other security, or to prove actual damages or that monetary damages are not an adequate remedy. Such remedies are not exclusive and are in addition to all other remedies that may be available at law, in equity, or otherwise.

33. Government Use. The SAAS Offering, Documentation are "commercial items" as that term is defined in FAR 2.101, consisting of "commercial computer software" and "commercial computer software documentation," respectively, as such terms are used in FAR 12.212 and DFARS 227.7202. If the SAAS Offering or Documentation are being acquired by or on behalf of the U.S. Government, then, as provided in FAR 12.212 and DFARS 227.7202-1 through 227.7202-4, as applicable, the U.S. Government's rights in the foregoing will be only those specified in this Agreement. County's rights in the SAAS Offering and Documentation are limited to those expressly granted in Section 3.

34. Cooperative Statement. Other government organizations and educational or health care institutions may elect to participate in this Agreement (piggyback) at their discretion provided EUNA also agrees to do so in writing.

35. Insurance. During the term of this Agreement, EUNA will maintain commercial general liability, property, and products liability insurance for the SAAS Offering provided and the obligations performed under the Agreement in the minimum amount of $1,000,000.00 per person/$3,000,000.00 per occurrence. Furthermore, upon the execution of this Agreement and upon request any time thereafter, EUNA will furnish a then current certified certificate(s) of insurance.

36. Chapters 2271, 2252, 2274, AND 2276 Texas Government Code Verification.

a. Boycott of Israel Prohibited. In compliance with Section 2271.001 et seq. of the Texas Government Code, EUNA verifies that neither it nor any of its affiliates currently boycott Israel and neither it nor any of its affiliates will boycott Israel during the term of this Agreement. "Boycott Israel" is defined in Section 808.001(1) of the Texas Government Code.

b. Scrutinized Business Operations Prohibited. In compliance with Section 2252.151 et seq. of the Texas Government Code, EUNA warrants and represents that: (1) neither EUNA nor any of its affiliates engages in scrutinized business operations in Sudan; (2) neither EUNA nor any of its affiliates engages in scrutinized business operations in Iran; and (3) neither EUNA nor any of its affiliates engages in scrutinized business operations with designated foreign terrorist organizations. "Scrutinized business operations in Sudan" is defined in Section 2270.0052 of the Texas Government Code. "Scrutinized business operations in Iran" is defined in Section 2270.0102 of the Texas Government Code. "Scrutinized business operations with designated foreign terrorist organizations" is defined in Section 2270.0152 of the Texas Government Code. EUNA further represents and warrants that neither EUNA nor any of its affiliates appears on any of the Texas Comptroller's Scrutinized Companies Lists.

c. Discrimination Against Firearm Entities or Firearm Trade Associations Prohibited. In compliance with Section 2274.002 of the Texas Government Code, EUNA verifies that neither it nor any of its affiliates have a practice, policy, guidance, or directive that discriminates against a firearm entity or firearm trade association; and neither it nor any of its affiliates will discriminate during the term of the Agreement against a firearm entity or firearm trade association. "Discriminate against a firearm entity or firearm trade association" is defined in Section 2274.001(3).

d. Boycott of Certain Energy Companies Prohibited. In compliance with Section 2276.002 of the Texas Government Code, EUNA verifies that neither it nor any of its affiliates currently boycott energy companies and neither it nor any of its affiliates will boycott energy companies during the term of this Agreement. "Boycott energy company" is defined in Section 809.001(1) of the Texas Government Code.

37. Compliance with Law. In providing the services required by this Agreement, EUNA must observe and comply with all applicable federal, state, and local statutes, ordinances, rules, and regulations, including, without limitation, workers' compensation laws, minimum and maximum salary and wage statutes and regulations, and non-discrimination laws and regulations. EUNA shall be responsible for ensuring its compliance with any laws and regulations applicable to its business, including maintaining any necessary licenses and permits.

38. Form 1295 Certificate of Interested Parties. EUNA acknowledges and agrees that it has fully, accurately, and completely disclosed all interested parties in the Form 1295 electronically filed with the Texas Ethics Commission, at https://www.ethics.state.tx.us/filinginfo/1295/, as required by law, and that the attached signed copy attached as Exhibit C is a full and true copy of said filed form.

39. Execution of Agreement. This Agreement may be executed in one or more counterparts, each of which will be deemed to be an original copy of this Agreement, and all of which, when taken together, shall be deemed to constitute one and the same agreement. The exchange of copies of this Agreement and of

signature pages by electronic transmission shall constitute effective execution and delivery of this Agreement as to the parties and may be used in lieu of the original Agreement for all purposes. Signatures of the parties transmitted or executed electronically shall be deemed to be their original signatures for any purpose whatsoever.

[signature page follows]

The Parties have caused this Agreement to be executed by their duly authorized representatives as of the Effective Date.

Tarrant County

By_____

Name:

Title:

Euna Solutions, Inc.

By_____

Name:

Title:

EXHIBIT A

Euna Renewal Order Form

Prepared for:

Tarrant County

100 E Weatherford St. #303

Fort Worth, Texas 76102

United States

Prepared by:

Euna Solutions, Inc.

Dek Prentice
dek.prentice@eunasolutions.com

PRICE QUOTE

Quote Expiry Date: 31 January, 2026

Subscription Term: 1 year and 2 one-year options

Subscription Start Date: 1/17/2026

Annual Subscriptions		
Solution	**Description**	**Quantity**
Euna Procurement Powered by IonWave	Electronic Bidding	1
Euna Procurement Powered by IonWave	Supplier Management	1
Euna Procurement Powered by IonWave	Contract Management	1

Euna Procurement Powered by IonWave	Tier One Support	1

Recurring Annual Fees:	$65,000.00
Year 1 Total:	$65,000.00

ORDER NOTES

Fees By Year:

- Year 1 – $65,000.00 1/17/2026 to 1/16/2027
- Year 2 – $68,000.00 1/17/2027 to 1/16/2028 Optional
- Year 3 – $71,000.00 1/17/2028 to 1/16/2029 Optional

Total Contract Value – $204,000.00

Terms of Payment:

NOTE THAT THIS IS NOT AN INVOICE

- Annual Subscriptions
  - Annual subscription begins on subscription start date
  - Due 100% upon in advance subscription start date (Net 30) Order Form Acceptance Date (Net 30) and annually in advance for future years
  - Subject to a fixed annual increase outlined above in the Fees By Year
- One-Time Services
  - Due 100% upon Order Form Acceptance Date (Net 30)
- Applicable sales tax extra

Professional Services Fees Schedule: N/A

Additional Notes:

For County Invoicing Purposes:

Tax ID # _____

Is this purchase tax exempt? ☐ Yes ☐ No. If Yes, please include your tax exempt form for our records.

Contact Information for Notices and Invoices:

Name:

Email:

Terms and Conditions

Unless otherwise stipulated in Order Notes and Terms of Payment, the County hereby agrees to order the products and/or services outlined above at the prices indicated, and acknowledges it has read, understands and agrees to be bound by the terms and conditions detailed above (the "Agreement").

All remittance advice and invoice inquiries can be directed to billing@eunasolutions.com.

EXHIBIT B

Euna Solutions General Service Level Agreement (SLA)

Overview

The purpose of this Service Level Agreement (SLA) is to outline the general terms and conditions under which Euna Solutions will deliver hosted services to each of its clients. This document aims to ensure a mutual understanding of the service expectations, responsibilities, and performance standards between the parties involved.

This general SLA covers the common provisions of multiple products and services, including but not limited to Budget, Payments, and Procurement. It defines the general service levels, performance metrics, support processes, and maintenance schedules applicable to these hosted solutions. The scope of this agreement is to ensure that Euna Solutions delivers consistent, reliable, and high-quality services, thereby supporting their client business operations effectively.

Service Performance

Availability

Solutions are continuously monitored by automated systems that track availability 24/7. The service is considered "available" when end-users can successfully access and use the core functionality of the hosted application as intended.

Confidentiality

Data-at-Rest protection is provided for customer data stored within the Solution using cloud-native AES-256 encryption and key management services. Data-in-Transit protection is provided using TLS 1.2 or greater.

Uptime Guarantee

Euna Solutions is committed to delivering reliable solutions, ensuring that all hosted applications remain available a minimum of 99.9% uptime within any given calendar month.

Uptime percentage is determined based on the total number of minutes during which the service is operational in each month, e.g. 100% - (Unplanned downtime minutes/Minutes in the month).

Uptime Exclusions

- Any scheduled maintenance period where solution is unavailable due to an update or maintenance activity.
- A force majeure event where Euna Solutions has no direct control over resolving an issue
- Emergency maintenance where if issue were unaddressed, would result in material breach of SLA, data loss, or system security, etc. or could significantly impact service availability or security

Support and Maintenance

Standard Support Hours are minimally 8am to 6pm Eastern Standard Time, Monday – Friday. Excluding statutory holidays

Response times vary by product and Priority definition. Priority definitions can be found below, and response times can be found within your product specific SLA

Maintenance Windows may also vary by product but Euna Solutions will guarantee that outside of any emergency, they will occur outside of client normal business hours and if not regularly scheduled, will have a 1~3 day advance notification.

Responsibilities

Euna Solutions shall

- use commercially reasonable efforts to provide its Countys with maintenance and support services (“Support Services”) via telephone, electronic mail, or other electronic means.
- host in a secure SOC2 Type 2 environment, such as AWS or Azure, within a US region
- be responsible for maintaining application and information system software versions, updates, patches, and security.

Client shall

- be responsible for the confidentiality and use of its Passwords.
- not give rise to any breach of confidentiality or privacy laws, or any civil liability.
- not tamper with the security or render any part of the Systems unusable.

- not violate any local, state / provincial, federal or foreign law, treaty, regulation or convention applicable.

Support Types and Levels

Support requests will be organized into four categories: requests, incidents, problems, and changes. These categories help ensure prioritization of requests and timely handling of each type.

Requests are specific requests for information, access to a service, or some change to an existing solution, e.g. how some feature is expected to work, Account Create/Modify, etc.

Problems are when the solution is not fit for use in some way or the solution is not working as intended or expected and are often quite localized, e.g. data is displaying incorrectly, any error message, etc.

Incidents are unplanned events that disrupt or reduce the quality or security of your service and often broadly affect numerous clients, e.g. a hardware or network malfunction, etc.

Changes include anything involving organizational changes to infrastructure, such as rolling out new services or upgrading software or making a change to a production hosting environment.

Service Level Goals

Specific SLA times will vary by Product

Euna Service Desk will make every effort to fulfill requests and support incidents with the following target SLAs. A solution may initially be some temporary mitigation of the issue until a more complete solution may be implemented:

Prioritization Matrix

Urgency is how bad the problem is, e.g. how many sites or people are affected, how dangerous to data or security the issue is, etc.

> **Critical**: e.g. Data Corruption, Security breach/vulnerability, numerous environments affected, Functionality inaccessible, etc.
>
> **High**: Very bad performance, more than one site affected, etc.
>
> **Medium**: Performance, workaround exists, non-critical business process
>
> **Low**: No significant problem, cosmetic, etc.

Impact is how quickly the problem needs be addressed, e.g. End of fiscal period, etc.

Critical: Business use is impossible or significant potential to affect business

High: Significant affect to business or significant potential to affect business

Medium: Issues is annoying and/or troublesome, but business use may continue

Low: Issue has little to no material effect to business processes

Priority is the resulting combination of Severity and Urgency and is minimally reflected by P1 to P4

P1: Addressed as highest priority 24x7 until mitigated

P2: Addressed as highest priority

P3: Addressed as next available task to be taken on (Sprint interruption, but not task interruption)

P4: Addressed after planned against all other Engineering, Security or Product initiatives

Examples:

- Onsite Demo (Critical urgency), single user login (Moderate Impact) is not working, is a P2
- A high vulnerability in the most recent release, is a P1
- A site cosmetic error like a misspelling, is a P4

IMPACT	**URGENCY**			
	Critical	**High** Affects 10-30% of tenants, leading to significant service degradation or partial outage	**Medium** Affects less than 10% of tenants, with minor service performance degradation	**Low** Affects individual tenants or a very small group, with negligible impact on overall service performance
Extensive Critical business operations are halted, resulting in substantial financial loss or reputational damage	P1	P1	P2	P3

Significant Important business functions are impaired, necessitating urgent attention and resolution	P1	P2	P3	P4
Moderate Non-critical business operations are affected, requiring timely intervention	P2	P3	P4	P4
Minor Very low impact on business operations, typically involving minor inconveniences	P3	P4	P4	P4

EXHIBIT C

Euna Privacy Policy

Effective Date: December 8, 2023

Introduction

Euna Solutions, is a government technology company with locations in Chicago, Illinois; Springfield, Missouri; and Oakville, Ontario.

This Privacy Policy covers our collection, use and disclosure of information about identifiable individuals and information that can be used to identify any individual ("Personal Information").

Personal Information may be collected via our websites, software services, social media sites, and other marketing media, which collectively include:

- The use of the https://eunasolutions.com and the websites of Euna Solutions subsidiaries (each, a "**Website**");
- Social media messaging and marketing campaigns;
- Electronic communications with Euna Solutions; and/or
- End User accounts created and maintained within Euna Solutions software services.
  By visiting any of our websites or using our products and software services (collectively, the "Website") in any manner, you acknowledge that you accept the practices and policies outlined in this Privacy Policy and you hereby consent to the collection, use and disclosure of your Personal Information in accordance with this Privacy Policy.

We provide Software-as-a-Service (SaaS) solutions ("**Platform Services**") that are intended for use by public sector organizations (our "**Customers**") and their employees, customers, constituents, and suppliers (collectively, "**End Users**" of our Platform Services). When using our Platform Services, our Customers are responsible for maintaining their own privacy policies governing the collection, use and disclosure of any Personal Information entered into our Platform Services. Our Customers are also responsible for obtaining any necessary authorization and/or consent for Personal Information you make available to others through our Platform. Euna Solutions is not a data controller and will adhere to Customer requirements with respect to the processing of Customer information, provided that those requirements are provided to Euna Solutions in writing. Information related to the security and privacy practices associated with our Platform is contained within our product documentation and available to customers and prospective clients upon request.

Euna Solutions does not sell your Personal Information to third parties. We do, however, use third parties to help us provide our services to you. They may have access to your Personal Information as collected by the Website, our Platform Services, or third-party services that are integrated with our Website and Platform Services, as reasonably necessary to perform the contracted tasks on our behalf. Accordingly, we sign agreements, with our third-party vendors and suppliers that do not permit them to sell or disclose any Personal Information we share with them.

This Privacy Policy does not apply to the practices of companies that we do not own or control.

Personal information we collect

Information you choose to provide to us

When accessing *the* Website, to include registering with our Platform Services, we may ask you to provide Personal Information to:

- Download articles, data sheets or eBooks
- Request a free trial or demo
- Refer a friend to us
- Communicate with us directly
- Create an End User account and user profile
- Participate in a marketing or sales promotion
- Attend trade events and other industry networking events
- Register or attend a webinar or other event
- Participate in programs we may offer from time to time
- Apply for a job opening
- Pay for our services

To support these functions, we may request the following types of Personal Information about you:

- First and last name
- Business contact information to include your email address, phone number, mailing address, job title, and/or company name

- Additional information you choose to include within your End User profile (e.g., a profile picture)
- Information you provide when filling in forms on the Website. For example, to subscribe to our newsletter, respond to a survey, enter a contest or promotion sponsored by us, or request services
- Information you may provide when you report a problem with the Website
- A resume and a cover letter
- Billing and payment information to include credit card information.

If you choose to provide us with a third-party's Personal Information (the person's name, email and company) when taking part in our referral program, you represent that you have the third-party's permission to do so.

Information we automatically collect

As you visit, browse, or use the Website, we may use automatic data collection technologies to collect certain information about your equipment, network connection, interactions with the Website, and usage patterns, including:

- Your search queries and details about pages visited, the links you clicked on, access times, and actions you take in connection with any of the visited pages
- Communications details including location data, logs and other network communication data
- Information about your computer and internet connection, including your IP address, operating system and browser type.

The information we collect automatically is primarily statistical data and does not include Personal Information, but we may maintain it or associate it with Personal Information we collect in other ways or receive from third parties. This information helps us to improve the Website so that we can deliver a better and more personalized service to you.

We use cookies throughout the Website to recognize and authenticate visitors and End Users. A cookie is a small amount of data, which may include a unique identifier. Cookies are sent to your browser from a website and stored on your device. We assign a different cookie to each device that accesses the Website. We use session cookies containing encrypted information to allow the system to uniquely identify you while you are logged in to our Platform Services. This

information allows us to securely process your online transactions and requests. If you disable cookies, you may not be able to take advantage of all the features of the Website and/or Platform Services. We do not link any of the information we use in cookies to any Personally Information submitted by you when you are on the Website; however, we may combine data derived from our usage of cookies with account information of registered users of our Platform Services.

Some content or applications on the Website are served by third parties, including servers, content providers and application providers. These third parties may use cookies alone or in conjunction with web beacons or other tracking technologies to collect information about you when you use our Website. Third parties may use this information to provide you with interest-based, or behavioral, advertising or other targeted content.

We may also collect information when you open email messages from us or click on links within those email messages

Information we may collect from third parties

We may combine information we collect from your direct interactions with us with information obtained through other third-party sources. We also obtain and/or purchase lists from third parties for individuals and companies interested in our products.

The information we collect from third parties may include your name, email address, business address, job title, company name, and telephone number.

How we use personal information

We use your Personal Information to:

- Advertise and market our products and services, including delivering interest-based advertisements on the Website and other sites or content syndication platforms and websites
- Send communications to you about:
    - New application features and upgrades
    - Our services and offerings
    - Event announcements
    - Product notices and changes to our terms and policies
    - Particular programs in which you have chosen to participate
    - Promotional offers and surveys

    - Scheduling demos and managing free trials
- Communicate with you directly through emails, calls, chats and video conferencing
- Deliver training and support to our Platform End Users and/or carry out the transactions you have requested
- Process payments for Platform subscriptions. • Create and manage marketing campaigns
- Generate sales leads
- Analyze user clicks and usage of the Website to improve user experience, maximize usage of our services and diagnose problems
- Manage the Website to maintain and deliver requested and contracted services
- Enforce our Website terms and/or separate contracts (if applicable)
- Prevent fraud and other prohibited or illegal activities
- Protect the security or integrity of the Website and Platform Services
- Or otherwise, as disclosed to you at the point of collection or as required or permitted by law.

Please note that sometimes we may record a conference call in which you participate. If we do so, we will announce that a recording is taking place and enable you to opt-out

How we share personal information

We may share your Personal Information in the following ways:

- Internally: We may share your information with our parent, subsidiary, and affiliate entities and our portfolio of companies
- With Our Service Providers: We may share your information with third parties who perform services on our behalf. For example, this may include companies that send emails on our behalf or help us run the Website
- With Our Business Partners: This may include companies that deliver online advertisements
- With Any Successors to All or Part of our Business: For example, if we merge with, acquire or are acquired, or sell part of its business to another entity. This may include an asset sale, corporate reorganization or other change of control

- For Other Reasons We May Describe to You.

In addition, we may disclose your Personal Information to third parties without your consent if we have reason to believe that disclosing this information is necessary to identify, contact or bring legal action against someone who may be causing injury to or interference with (either intentionally or unintentionally) our rights or property, other End Users, or anyone else (including the rights or property of anyone else) that could be harmed by such activities. Further, we may disclose Personal Information when we believe in good faith that such disclosure is required by and in accordance with the law. We also reserve the right to access, read, preserve, and disclose any information as we reasonably believe is necessary to:

- Satisfy any applicable law, regulation, legal process or governmental request
- Enforce our contracts or user agreements, including investigation of potential violations hereof
- Detect, prevent, or otherwise address fraud, security or technical issues.

The above may include exchanging Personal Information with other companies and organizations for fraud protection and spam/malware prevention. Notwithstanding the general terms of this policy, the collection, use, and disclosure of Personal Information may be made outside of the terms herein to the extent provided for in any applicable privacy or other legislation in effect from time to time, or pursuant to court orders.

How we secure personal information

We are committed to protecting the security of the Personal Information we collect, process, and store.

We have implemented measures designed to secure your Personal Information from accidental loss and from unauthorized access, use, alteration and disclosure. To do this, we use a variety of physical, administrative and technical safeguards designed to help protect it from unauthorized access, use and disclosure. We have implemented best-practice standards and controls in compliance with internationally recognized security frameworks. We use encryption technologies to protect data exchanged with our Website.

The safety and security of your Personal Information also depends on you. Where we have given you (or where you have chosen) a password for access to certain parts of our Website, you are responsible for ensuring the password is hard to guess and is kept confidential.

Unfortunately, the transmission of information via the internet is not completely secure. Although we have implemented commercially reasonable safeguards to protect your Personal Information, we cannot guarantee the security of Personal Information transmitted to our Website.

Your rights

We provide the same suite of services to all our Customers and End Users worldwide. We offer the following rights to all individuals regardless of their location or applicable privacy regulations. For Personal Information we have collected from and about you, you have the right to:

- Obtain information about what Personal Information we have about you and receive a copy of the information
- Update or correct your Personal Information or ask us to do it on your behalf
- Request that we delete your Personal Information at any time. We will communicate back to you within a reasonable timeline the result of your request. We may not be able to delete or erase your Personal Information, but we will inform you of these reasons and any further actions available to you
- Object to our processing of your Personal Information for direct marketing purposes. This means that we will stop using your personal information for these purposes
- Ask us to limit the way in which we use your Personal Information
- Request that we export to you in a machine-readable format all the Personal Information we have about you. If this is not technically feasible, we will inform you of these reasons and any further actions available to you.

If you would rather not receive marketing communications from us, you can click the “Unsubscribe” link in e-mails we send you to stop receiving marketing communications.

You may also choose which information we collect automatically from your device by controlling the cookie settings on your browser or by indicating your cookie preferences through our Website. If you opt-out of receiving marketing communications, we may still communicate with you regarding security and privacy issues, servicing your account, fulfilling your requests, or administering any promotion or any program in which you may have elected to participate.

Our application and services are intended for business use, and we do not expect them to be of any interest to minors. We do not intentionally collect any Personal Information of consumers

under the age of 13. If you believe that a child under 13 may have provided us with their Personal Information, please contact us at privacy@eunasolutions.com.

If you would like to exercise any of the rights described above, please contact us at privacy@eunasolutions.com.

You also have the right to lodge a complaint with the local organizations in charge of enforcing the privacy legislation applicable in your territory.

How long we keep your personal information

We retain Personal Information as long as it is necessary to provide the services to you and our customers, subject to any legal obligations to further retain such information.

We may also retain Personal Information to comply with the law, prevent fraud, collect fees, resolve disputes, troubleshoot problems, assist with investigations, enforce our Terms of Service and take other actions permitted by law.

The information we retain will be handled following this Privacy Policy.

Information connected to you that is no longer necessary and relevant to provide our services may be de-identified or aggregated with other non-personal data. This information may provide insights that are commercially valuable to Euna Solutions, such as statistics of the use of our services.

Storage and transfer of information

We process data, including Personal Information, in locations in the United States, Canada, and AWS (Amazon Web Services) in Europe and rely on legally provided mechanisms to lawfully transfer data across borders, such as contracts incorporating data protection and sharing obligations. Euna Solutions uses AWS located in the European Union to store data for our European Customers. However, Personal Information may be transferred to subprocessors in Canada and the United States in accordance with this Privacy Policy and applicable laws.

We provide the capability for the return, transfer and/or disposal of Personal Information securely.

By submitting Personal Information or otherwise using the Website or our Platform Services, you agree to this transfer, storing or processing of your Personal Information in Canada and the United States. You acknowledge and agree that your Personal Information may be accessible to law enforcement and governmental agencies relative to the country or territory where the data is stored under lawful access regimes or a court order.

Contact information

You may contact us at privacy@eunasolutions.com to exercise any of your rights or ask for more information about your Personal Information and our privacy practices.

TAKINGS IMPACT ASSESSMENT CHECKLIST

Complete this form for any county action that involves the adoption of a regulation, policy, guideline, court resolution, or order.

Project/Regulation Name: Euna Solutions, Inc. – Euna Procurement Powered by IonWave - Purchasing

County Department: PURCHASING
Contact Person: Melissa Lee, C.P.M., A.P.P.
Phone Number for Contact Person: (817) 884-3245

Type of TIA Performed: (SHORT TIA) or FULL TIA. Circle one after answering the questions in Sections II and III below.

****

I.Stated Purpose

Attach to this checklist an explanation of the purpose of the regulation, policy, guideline, court resolution or order.

****

Note: The remainder of this Takings Impact Assessment Checklist should be completed in consultation with the Criminal District Attorney's Office.

II. Potential Effect on Private Real Property

1. Does the county action require a physical invasion, occupation or dedication of real property?

   Yes_____ No __√__

2. Does the county action limit or restrict a real property right, even partially or temporarily?

   Yes_____ No __√__

   If you answered yes to either question, go to Section III. If you answered no to both, STOP HERE and circle SHORT TIA at the top of the form.

****

TARRANT COUNTY
COMMISSIONERS COURT COMMUNICATION

Court Date: December 9, 2025	**Court Order #:**	**Page:** 1 of 8
Department: Purchasing	**Prepared By:** Kehinde Olugbile	**Approved By:** Christopher Lax, CPSM, CPSD, CPCP

SUBJECT:

Nova Biomedical - Maintenance for NOVA Electrolyte Instrument - Medical Examiner's Office

*****CONSENT AGENDA *****

COMMISSIONERS COURT ACTION REQUESTED

It is requested that the Commissioners Court approve NOVA Biomedical as sole source for maintenance for NOVA electrolyte instrument, for the Medical Examiner's Office for $11,820.00 and approve contract.

BACKGROUND

NOVA Biomedical provided the Purchasing Agent documentation that they are the manufacturer and soles source of NOVA electrolyte instrument.

The purpose of this contract is to provide ongoing maintenance and technical support services for the Medical Examiner's Nova electrolyte instrument.

Under the County Purchasing Act, exemptions to the competitive bidding requirements are allowed for certain types of purchases. The statutes require that the Purchasing Agent advise the Commissioners Court of the existence of only one (1) source, with such notice to be entered into the minutes of the Court.

Accordingly, the above item has been determined to be sole source under the County Purchasing Act 262.024(a)(7) as follows:

"(7) an item can be obtained from only one (1) source, including:

(A) items for which competition is precluded because of the existence of patents, copyrights, secret processes, or monopolies;

(D) captive replacement parts or components for equipment."

The term of the contract is twelve (12) months, effective December 9, 2025.

The contract is attached for approval and signature. The District Attorney's Office reviewed the contract as to form.

FISCAL IMPACT

Expenses for the last twelve (12) months were $8,249.00. Funding in the amount of $11,820.00 is available in account 10000-2026 General Fund/2310100000 Medical Examiner/578031 Lab Equipment and Maintenance.

PASSED AND APPROVED on December 9, 2025.

COUNTY OF TARRANT
STATE OF TEXAS

By: Separate Electronic Signature Page
Tim O'Hare
County Judge

APPROVED AS TO FORM:

_____
District Attorney's Office*

*By law, the District Attorney's Office may only approve contracts for its clients. We reviewed this document as to form from our client's legal perspective. Other parties may not rely on this approval. Instead, those parties should seek contract review from independent counsel.

Attachments

Nova Backup.pdf

September 18, 2025

To Whom It May Concern

Re: Sole Authorized Source

NOVA Biomedical medical device equipment contains patented technology. Nova Biomedical holds the intellectual and proprietary rights to the equipment, associated parts and accessories for the specific equipment.

Nova Biomedical does not certify nor authorize third party service providers to service Nova Biomedical equipment.

Any other service provider servicing Nova Biomedical equipment or the installation of non-Nova software or hardware would void the manufacturer warranty and/or may cause damage to the equipment and/or may affect equipment performance.

Any questions may be addressed to the Nova Biomedical Technical Support Department at 1-800-545-6682 or by email at **tcch__svc(g;novabio.com.**

Sincerely,

Nova Biomedical Corporation

nova®

biomedical

Service Agreement

This Service Agreement **("Agreement")** is made effective as of the date executed by Customer below **("Effective Date")** and entered into by and between Nova Biomedical Corporation, located at 200 Prospect Street, Waltham, MA 02454 **("Nova Biomedical"),** and Tarrant County Medical Examiner Forensic Laboratory, located at 200 Feliks Gwozdz Place, Fort Worth, TX 76104 **("Customer").** Nova Biomedical and Tarrant County Medical Examiner Forensic Laboratory are sometimes collectively referred to as the "Parties" and individually as a "Party".

1. **TERM.** This Agreement shall begin on the Effective Date and will terminate five (5) years after the Effective Date. This Agreement may be terminate by either party with cause with thirty (30) days written notice..

2. **SERVICES.** The Parties understand that services rendered herein are to support the install of one (1) Prime Plus Analyzer ("Equipment") located at **Tarrant County Medical Examiner Forensic Laboratory,** which may include charges for supplies, associated hardware and products, warranty and incremental services (collectively, the "Services") to be furnished by Nova Biomedical to Customer for use with the Equipment.

   A. This Agreement is intended to provide description of the services to be provided to Customer for the implementation, setup, install and ongoing support and maintenance of Nova Biomedical's one **(1)** Prime Plus Analyzer and NovaNet Device Management Software on the Tarrant County Medical Examiner Forensic Laboratory network.
   B. Services requested by Customer are as follows;
      i. In co-operation with appropriate Customer's parties, define, scope, install one (1) Prime Plus Analyzer and test requisite hardware across Customer in support of multiple Customer's facilities.
      ii. Upon execution of this Agreement, and in accordance with Customer timelines for implementation, Nova Biomedical will provide full implementation services of one (1) Prime Plus Analyzer as part of the Agreement.
      iii. All implementation, install, test, training, maintenance, support and services for hardware and software described herein are provided at the charges listed under Section 6:
      iv. Nova Technical Support Services are available 24/7/365, and are based in Waltham, MA.
         1. Support calls received during normal business hours (7:30am to 6:30pm EST) are answered and directed to the appropriate

product support team.

2. Support calls received after normal business hours are answered by Nova Biomedical's Answering Service. The appropriate Product Team will be notified by the service, and the Technician will contact the Customer within one (1) hour.

3. **FEES AND TAXES.** The total fees under this Agreement is **$11, 820.00.** Customer agrees to pay when invoiced fees relating to this Agreement or the Equipment. Invoices for products and any applicable taxes will be due 30 days from the invoice date.

4. **OWNERSHIP.** Nova Biomedical is the owner of the Equipment and have sole title to the Equipment. Nova Biomedical owns and retains all rights, title, software licenses and interest, including all intellectual property rights, in and to the software and all technologies related thereto, including any and all algorithms or processes developed and all derivatives, modifications, or improvements of, whether or not created or developed in connection with the Services. Nova Biomedical retains ownership of all software licenses for any and all integrated third-party software used by the program.

5. **CONFIDENTIALITY.** The Parties acknowledge that Customer is a governmental entity subject to the Texas Public Information Act and Texas Open Meetings Act, as codified in Texas Government Code chapter 551 and 552. This Agreement must be executed by the Tarrant County Commissioners Court at an open meeting and will be made available to members of the public. To the extent Customer receives a Public Information Act request for documents or information supplied by Nova Biomedical to Customer, notice will be supplied by Customer to Nova Biomedical pursuant to Texas Government Code section 552.305. Any objections to the public release of information or documents subject to the notice must be made by Nova Biomedical. Customer is not obligated to assert objections or legal arguments against the public release of Nova Biomedical's information and documents.

6. **INDEPENDENT CONTRACTORS.** The Parties are independent contractors. Neither is authorized or permitted to act as an agent, representative or employee of the other. Neither Party, by virtue of the Agreement, assumes any liability for any debts or obligations of a financial or legal nature incurred by the other Party.

7. **NOVA WARRANTY AND SERVICE.** Nova Biomedical warrants that the Equipment will be free from defects in material and workmanship and that they will conform to their respective labeled specifications from the date of delivery through the warranty periods. Extended service may be purchased at an additional cost. For required maintenance contact Nova at 1-800-545-6682. Nova Biomedical calibrates the Equipment to function with genuine Nova consumable products only and Nova does not warrant the performance of the Equipment if other brands of consumable products are used. THE FOREGOING WARRANTIES ARE IN LIEU OF ALL OTHER WARRANTIES, EXPRESS OR IMPLIED, INCLUDING THOSE OF MERCHANTABILITY AND FITNESS FOR A PARTICULAR PURPOSE. In the event of a breach of the foregoing, Nova will, at its option, either replace all non-

conforming Equipment or refund the purchase price. Such replacement or refund shall be your sole and exclusive remedy for breach of the foregoing warranties. In no event shall Nova Biomedical be liable to Customer for loss of profit, loss of use, or damage to person or property, incidental or consequential damages of any kind resulting from breach of warranty or any other obligation under this Agreement. CUSTOMERAGREE THAT CUSTOMER HAVE SELECTED EACH ITEM OF EQUIPMENT BASED UPON YOUR OWN JUDGMENT AND DISCLAIM ANY RELIANCE UPON ANY STATEMENTS OR REPRESENTATIONS MADE BY US.

8. **LOCATION OF EQUIPMENT.** Customer will keep and use the Equipment only at the address shown above and Customer agrees not to move it unless Nova Biomedical agree to it.

9. **LOSS OR DAMAGE.** Customer is responsible for the risk of loss or destruction of or damage to the Equipment. No such loss or damage relieves Customer from the payment obligations under this Agreement. Customer agrees to promptly notify Nova Biomedical in writing of any loss or damage and Customer will pay us the present value of the total of all unpaid payments plus the estimated fair market value of the Equipment at the end of the term, all discounted at six percent (6%) per year. Any proceeds of insurance will be paid to us and applied against any loss or damage.

10. **COLLATERAL PROTECTION AND INSURANCE.** Customer agrees to keep the Equipment fully insured against loss with Nova Biomedical as loss payee in amount not less than the replacement cost until this Agreement is terminated. Customer agrees to provide us certificates or other evidence of insurance acceptable to Nova Biomedical, before this Agreement begins. Nova Biomedical accepts Customer will maintain sufficient self-insurance to cover the cost of the Equipment in lieu of obtaining an insurance policy from a third party.

11. **ASSIGNMENT.** CUSTOMER HAS NO RIGHT TO SELL, TRANSFER, ASSIGN OR SUBLEASE THE EQUIPMENT OR THIS AGREEMENT. Nova Biomedical may sell, assign, or transfer this Agreement without notice to Customer. Customer agrees that if Nova Biomedical, assign or transfer this Agreement, the new owner will have the same rights and benefits that we have now and will not have to perform any of Nova Biomedical obligations. Customer agrees that the rights of the new owner will not be subject to any claims, defenses, or set-offs that Customer may have against us.

12. **DEFAULT AND REMEDIES.** If Customer do not make payments in accordance to Section 3, when due to Nova Biomedical, Customer will be in default Customer is a governmental entity subject to the Texas Prompt Payment Act as codified in Texas Government Code Chapter 2251. Payments by Customer to Vendor will be due pursuant to Texas Government Code Section 2251.021 and any interest on overdue payments shall be calculated pursuant to Texas Government Code section 2251.025. If Customer is ever in default, at Nova Biomedical option, Nova Biomedical can terminate or cancel this Agreement and require that Customer: (1) pay the unpaid balance of this Agreement and (2) return the Equipment to Nova at your expense. Nova Biomedical may also use any of the remedies available to us under Article 2A

of the Uniform Commercial Code as enacted in the Commonwealth of Massachusetts or any other law.

IN WITNESS WHEREOF, the Parties, intending to be legally bound, have caused this Agreement to be executed by their proper and duly authorized representatives, as of the Effective Date.

Tarrant County Medical Examiner Forensic Laboratory	**Nova Biomedical Corporation**
By:_____	By:_____
Name:_____	Name: Bob Fox
Title:_____	Title: Sr. Director of North American Sales
Date:_____	Date:_____

TAKINGS IMPACT ASSESSMENT CHECKLIST

Complete this form for any county action that involves the adoption of a regulation, policy, guideline, court resolution, or order.

Project/Regulation Name Nova Biomedical - Maintenance for NOVA Electrolyte Instrument - Medical Examiner's Office

County Department: PURCHASING

Contact Person: Melissa Lee, C.P.M., A.P.P.

Phone Number for Contact Person: (817) 884-3245

Type of TIA Performed: (SHORT TIA) or FULL TIA. Circle one after answering the questions in Sections II and III below.

****

I. Stated Purpose

Attach to this checklist an explanation of the purpose of the regulation, policy, guideline, court resolution or order.

****

Note: The remainder of this Takings Impact Assessment Checklist should be completed in consultation with the Criminal District Attorney's Office.

II. Potential Effect on Private Real Property

1. Does the county action require a physical invasion, occupation or dedication of real property?

   Yes _____ No √

2. Does the county action limit or restrict a real property right, even partially or temporarily?

   Yes _____ No √

If you answered yes to either question, go to Section III. If you answered no to both, STOP HERE and circle SHORT TIA at the top of the form.

****

TARRANT COUNTY
COMMISSIONERS COURT COMMUNICATION

Court Date: December 9, 2025	**Court Order #:**	**Page:** 1 of 4
Department: Purchasing	**Prepared By:** Wanyu Chen	**Approved By:** Christopher Lax, CPSM, CPSD, CPCP

SUBJECT:

Groupware Technologies, LLC - HIV-AIDS Client Eligibility and Management System - HIV Administrative Agency

***** CONSENT AGENDA *****

COMMISSIONERS COURT ACTION REQUESTED

It is requested that the Commissioners Court approve renewal of Groupware Technologies, LLC as sole source for HIV-AIDS Client Eligibility and Management System, for HIV Administrative Agency.

BACKGROUND

On February 19, 2025, the Commissioners Court, through Court Order #144784, approved the renewal of the sole source.

Groupware Technologies, LLC provided the Purchasing Agent documentation to substantiate that their sole source status has not changed for the Provide Enterprise Care Management software system and support services. The program was developed by and is the sole property of Groupware Technologies, LLC and they do not have any third-party resellers or certified support providers. All licenses, maintenance, and support for this program utilized by HIV Administrative Agency are available only through Groupware Technologies, LLC.

Groupware Technologies, LLC is an independent software vendor specializing in the design, distribution, and support of its proprietary care management software, Provide Enterprise (PE). The HIV Administrative Agency and subrecipients use PE to manage all aspects of Ryan White grant funding, including budgets, billing, client-level data tracking, and reporting.

Under the County Purchasing Act, exemptions to the competitive bidding requirements are allowed for certain types of purchases. The statutes require that the Purchasing Agent advise the Commissioners Court of the existence of only one (1) source, with such notice to be entered into the minutes of the Court.

Accordingly, the above item has been determined to be sole source under the County Purchasing Act 262.024(a)(7) as follows:

> "*(7) an item can be obtained from only one (1) source, including:*
>
> > *(A) items for which competition is precluded because of the existence of patents, copyrights, secret processes, or monopolies;*

FISCAL IMPACT

Expenses for the last twelve (12) months were $64,724.17. Funding is available in account Grant-2004/ E0024-2027 DHHS-Ryan White Ending the HIV Epidemic: A Plan for America/1132000000 HIV Administration/578025 Software Maintenance and Licenses.

Attachments

Backup.pdf

Groupware Technologies, LLC

November 11, 2025

V. Wanyu Chen, Senior Buyer
Tarrant County Preventative Medicine Clinic
1101 S Main St
Fort Worth, TX 76104

Dear Wanyu Chen:

This letter certifies that Groupware Technologies, LLC. (GT) is the sole source of the Provide® Enterprise Care Management software system and support services for it. The program was developed by and is the sole property of GT and we do not have any third party resellers or certified support providers. All licenses, maintenance and support of the Provide Enterprise Care Management software system are available only through GT.

The Provide® Enterprise Care Management software has a number of unique features that make it particularly effective in helping Tarrant County Preventative Medicine Clinic meet federal data collection and reporting requirements related to the Ryan White CARE Act. GT has also added a number of key data collection and reporting features to support unique Tarrant County requirements as well as an invoicing and contract management system.

GT firmly believes that Tarrant County would not be able to find another vendor to step in with a similar software product that offers the complete services of the Provide® Enterprise Care Management software system.

Sincerely,

Andy Nunemaker
Chief Executive Officer

10437 Innovation Drive, Suite 306 • Wauwatosa, Wisconsin 53226-4815
Phone: 414-454-0161 • Fax: 414-454-0162 • Internet: info@grouptech.com

TAKINGS IMPACT ASSESSMENT CHECKLIST

Complete this form for any county action that involves the adoption of a regulation, policy, guideline, court resolution, or order.

Project/Regulation Name: Groupware Technologies, LLC - HIV-AIDS Client Eligibility and Management System – HIV Administrative Agency

County Department: PURCHASING

Contact Person: Melissa Lee, C.P.M., A.P.P.

Phone Number for Contact Person: (817) 884-3245

Type of TIA Performed: (SHORT TIA) or FULL TIA. Circle one after answering the questions in Sections II and III below.

****

I. Stated Purpose

Attach to this checklist an explanation of the purpose of the regulation, policy, guideline, court resolution or order.

****

Note: The remainder of this Takings Impact Assessment Checklist should be completed in consultation with the Criminal District Attorney's Office.

II. Potential Effect on Private Real Property

1. Does the county action require a physical invasion, occupation or dedication of real property?

   Yes_____ No __√__

2. Does the county action limit or restrict a real property right, even partially or temporarily?

   Yes_____ No __√__

If you answered yes to either question, go to Section III. If you answered no to both, STOP HERE and circle SHORT TIA at the top of the form.

****

TARRANT COUNTY
COMMISSIONERS COURT COMMUNICATION

Court Date: December 9, 2025	**Court Order #:**	**Page:** 1 of 8
Department: Purchasing	**Prepared By:** Kehinde Olugbile	**Approved By:** Christopher Lax, CPSM, CPSD, CPCP

SUBJECT:

Consideration of Contract - RFP No. F2025162 - Annual Contract for Liquid Chromatography-Mass Spectrometry Instrument and Maintenance - Medical Examiner's Office - Thermo Electron North America, LLC - Per Contract Terms

*****CONSENT AGENDA *****

COMMISSIONERS COURT ACTION REQUESTED

It is requested that the Commissioners Court consider a contract for RFP No. F2025162, Annual Contract for Liquid Chromatography-Mass Spectrometry Instrument and Maintenance, for the Medical Examniner's Office, with Thermo Electron North America, LLC.

BACKGROUND

On October 14, 2025, the Commissioners Court, through Court Order #146193, awarded F2025162, Annual Contract for Liquid Chromatography-Mass Spectrometry Instrument and Maintenance, for the Medical Examniner's Office, to Thermo Electron North America, LLC.

The purpose of this contract is to reflect the terms for delivery, warranty, and service of the Liquid Chromatography-Mass Spectrometry Instrument.

The contract is attached for approval and signature. The District Attorney’s Office reviewed this contract as to form.

FISCAL IMPACT

There is no fiscal impact asociated with this item.

PASSED AND APPROVED on December 9, 2025.

COUNTY OF TARRANT
STATE OF TEXAS

By: Separate Electronic Signature Page
Tim O'Hare
County Judge

APPROVED AS TO FORM:

_____
District Attorney's Office*

*By law, the District Attorney's Office may only approve contracts for its clients. We reviewed this document as to form from our client's legal perspective. Other parties may not rely on this approval. Instead, those parties should seek contract review from independent counsel.

Attachments

Contract Backup

ADDENDUM TO TERMS
BETWEEN
Thermo Electron North America LLC ("Seller")
AND
Tarrant County ("Buyer")

Agreement No.

This Addendum to Buyer's " General Terms and Conditions" and "Special Terms and Conditions" (hereinafter referred to as the "Terms") is made and entered into on December 16 , 2025 (the "Effective Date") by and between Tarrant County and Seller. Buyer and Seller may be referred to individually as a "Party" or collectively as the "Parties" herein.

NOW, THEREFORE, the Parties agree as follows:

1. Unless otherwise set forth in Seller's quotation for the Products, (i) shipping terms are FCA Shipping Point , with shipping charges prepaid and added to the invoice, with title and risk of loss of the Products passing to Buyer when the Products are transferred to carrier at Seller's facility; (ii) pricing excludes all applicable taxes, duties, shipping and handling; (iii) in accordance with the Texas Prompt Payment Act, and 100 % of the cost is invoiced at shipment; (iv) the order may not be changed, cancelled, otherwise terminated, or stopped without Seller's consent; and (v) no audit, acceptance, inspection, right of rejection or right of return terms shall apply.

2. Section 13 of the General Terms and Conditions is deleted in its 'entirety and replaced as follows:

"This Agreement may not be assigned or transferred without each Party's prior written consent, which consent shall not be unreasonably withheld; provided, however, that the Parties may assign this Agreement to any person or entity acquiring all or substantially all of a Party's business or assets (or of the business division or product line to which the confidential information primarily relates). Subject to the foregoing, this Agreement will be binding upon and inure to the benefit of, and be enforceable by, each Party and its successors and assigns. Notwithstanding anything to the contrary, each Party has the right to disclose the terms and conditions of this Agreement to the extent necessary to establish rights or enforce obligations under this Agreement."

3. Section 14 of the General Terms and Conditions is deleted in its 'entirety and replaced as follows:

"By Seller. Seller will indemnify, defend and save Buyer, its officers, directors, and employees from and against any and all damages, liabilities, actions, causes of action, suits, claims, demands, losses, costs and expenses (including without limitation reasonable attorneys' fees) ("Indemnified Items") asserted by another party against Buyer for (i) bodily injury to or death of persons or damage to tangible property to the extent caused by the negligence or willful misconduct of Seller, its employees, agents or representatives or contractors in connection with the performance of Services at Buyer's premises under this Agreement; and (ii) claims that a Product infringes any U.S. patent, copyright or trade secret; provided, however, Seller's liability under this Section does not extend to any such Indemnified Items caused by either (u) the negligence or willful misconduct of Buyer, its employees, agents or representatives or contractors, (v) by any third party, (w) use of a Product in combination with equipment or software not supplied by Seller where the Product alone would not be infringing, (x) Seller's compliance with Buyer's designs, specifications or instructions, (y) use of the Product in an application or environment for which it was not designed, or (z) modifications of the Product by anyone other than Seller without Seller's prior written approval. Buyer will promptly notify Seller in writing of any claim covered by Seller's indemnification obligations hereunder. Seller may assume exclusive control of the defense of such claim or, at the option of the Seller, to settle the same. Buyer agrees to cooperate reasonably with Seller in connection with the performance by Seller of its obligations in this Section.

Notwithstanding the above, Seller's infringement related indemnification obligations shall be extinguished and relieved if Seller, at its discretion and at its own expense (a) procures for Buyer the right, at no additional expense to Buyer, to continue using the Product; (b) replaces or modifies the Product so that it becomes non-infringing, provided the modification or

THERMO FISHER CONFIDENTIAL & PROPRIETARY
This document and all information and expression contained herein are the property of Thermo Fisher Scientific, Inc., are provided in confidence, and may not, in whole or in part, be used, duplicated, or disclosed for any purpose without prior written permission of Thermo Fisher Scientific, Inc. All rights reserved.

replacement does not adversely affect the specifications of the Product; or (c) in the event (a) and (b) are not practical, refund to Buyer the amortized amounts paid by Buyer with respect thereto, based on a five (5) year amortization schedule. THE FOREGOING INDEMNIFICATION PROVISION STATES SELLER'S ENTIRE LIABILITY TO BUYER FOR, AND BUYER'S SOLE AND EXCLUSIVE REMEMDY IN RESPECT OF, THE CLAIMS DESCRIBED HEREIN.

4. Seller's sole obligation with respect to the Services is to provide the quoted Services in a workmanlike manner and if Buyer provides notice of defect in Service within ninety (90) days of completion of such Services, Seller will, at its sole option, either reperform the Services without charge to Buyer or grant Buyer a credit for the amount paid by Buyer with respect to such Service. Seller warrants that the Products will operate or perform substantially in conformance with Seller's published specifications and be free from defects in material and workmanship, when subjected to normal, proper and intended usage by properly trained personnel, for the period of time set forth in the Product documentation, published specifications or package inserts (the "Warranty Period"). If a Warranty Period is not specified in Seller's Product documentation, published specifications, or package inserts, the Warranty Period for new instruments is twelve (12) months from the date of shipment to Buyer; and for all other Products is ninety (90) days from the date of shipment. During the Warranty Period, Seller agrees to repair or replace, at Seller's option, defective Products so as to cause the same to operate in substantial conformance with Seller's published specifications; provided that Buyer (a) promptly notifies Seller in writing upon the discovery of any covered defect in the Products, including the Product model and serial number (if applicable) and details of the warranty claim; and (b) after Seller's review, Seller will provide Buyer with an RMA number and services data, which may include biohazard decontamination procedures and other Product-specific handling instructions. Then, if applicable, Buyer may return the defective Products to Seller with all costs prepaid by Buyer. Replacement parts may be new or refurbished, at the election of Seller. All replaced parts shall become the property of Seller. Shipment to Buyer of repaired or replacement Products will be made in accordance with the delivery terms of this Agreement. Except for new consumable items manufactured and sold by Seller, this warranty expressly excludes all other consumable parts or components (e.g., bulbs, belts, cartridges, etc.) in the Products. If Seller elects to repair defective medical device instruments, Seller may, in its sole discretion, provide a replacement loaner instrument to Buyer as necessary for use while the instruments are being repaired.
Notwithstanding the foregoing, Products supplied by Seller that are obtained by Seller from an original manufacturer or third party supplier are not warranted by Seller; but Seller agrees to assign to Buyer any warranty rights in such Product that Seller may have from the original manufacturer or third party supplier, to the extent such assignment is allowed by such original manufacturer or third party supplier.

In no event shall Seller have any obligation to make repairs, replacements or corrections under the Warranty, in whole or in part, as the result of or with respect to: (a) use of the Products in a manner for which they were not designed; (b) improper storage and handling of the Products; (c) use of the Products in combination with equipment or software not supplied by Seller (d) shipping damage incurred en route to Buyer's site or because of moving equipment, in which case Seller will promptly provide a cost estimate for technical support to the consignee for filing claims to carriers for shipping damage; (e) flood, lightning, earthquake, tornado, hurricane or fire, bombing, armed conflict, malicious mischief, sabotage or other natural or man-made disasters; (f) normal wear and tear, physical abuse, misuse, sprinkler damage, electrical surge or abnormal power variation; (g) repairs, maintenance, or modifications made by anyone other than Seller trained personnel or without Seller's supervision and/or approval; (h) relocation and reinstallation of equipment; although upon request Seller will supervise the removing, crating, relocation and reinstallation of the Products at Seller's current Services rates; (i) maintenance or replacement of media (i.e., floppy disks, plotter supplies, etc.) whatever the reason for loss, failure or damage; (j) beta-site support; (k) operator training; or (l) repairing Product malfunctions if the fault is not with the equipment. If Seller determines that Products for which Buyer requested warranty services are not covered by this warranty, Buyer will pay or reimburse Seller for all costs of investigating and responding to such request at Seller's then prevailing time and materials rates. If Seller provides Services or replacement parts that are not covered by this warranty, Buyer shall pay Seller therefor at Seller's then prevailing time and materials rates.

ANY INSTALLATION, MAINTENANCE, REPAIR, SERVICE, RELOCATION OR ALTERATION TO OR OF, OR OTHER TAMPERING WITH, THE PRODUCTS PERFORMED BY ANY PERSON OR ENTITY OTHER THAN SELLER WITHOUT SELLER'S PRIOR WRITTEN APPROVAL, OR ANY USE OF REPLACEMENT PARTS NOT SUPPLIED BY SELLER, SHALL IMMEDIATELY VOID AND CANCEL ALL WARRANTIES WITH RESPECT TO THE AFFECTED PRODUCTS AND/OR SERVICES. THE OBLIGATIONS CREATED BY THIS WARRANTY STATEMENT FOR SELLER TO REPAIR OR REPLACE A DEFECTIVE PRODUCT OR TO REPERFORM OR

This document and all information and expression contained herein are the property of Thermo Fisher Scientific, Inc., are provided in confidence, and may not, in whole or in part, be used, duplicated, or disclosed for any purpose without prior written permission of Thermo Fisher Scientific, Inc. All rights reserved.

CREDIT THE PRICE OF DEFECTIVE SERVICES SHALL BE THE SOLE REMEDY OF BUYER FOR SUCH DEFECTIVE PRODUCTS OR SERVICES UNDER THIS AGREEMENT. EXCEPT AS EXPRESSLY PROVIDED IN THIS WARRANTY STATEMENT, SELLER DISCLAIMS ALL OTHER WARRANTIES, WHETHER EXPRESS OR IMPLIED, ORAL OR WRITTEN, WITH RESPECT TO THE PRODUCTS, INCLUDING WITHOUT LIMITATION ALL IMPLIED WARRANTIES OF MERCHANTABILITY, FITNESS FOR ANY PARTICULAR PURPOSE, OR NONINFRINGEMENT. SELLER DOES NOT WARRANT THAT THE PRODUCTS OR SERVICES ARE ERROR-FREE OR WILL ACCOMPLISH ANY PARTICULAR RESULT.

5. NOTWITHSTANDING ANYTHING TO THE CONTRARY CONTAINED HEREIN, THE LIABILITY OF SELLER UNDER THESE TERMS AND CONDITIONS (WHETHER BY REASON OF BREACH OF CONTRACT, TORT, INDEMNIFICATION, OR OTHERWISE, BUT EXCLUDING LIABILITY OF SELLER FOR BREACH OF WARRANTY (THE SOLE REMEDY FOR WHICH IS PROVIDED UNDER THE PRODUCT AND SERVICES WARRANTIES HEREIN) SHALL NOT EXCEED AN AMOUNT EQUAL TO THE LESSER OF (A) THE TOTAL PURCHASE PRICE THERETOFORE PAID BY BUYER TO SELLER WITH RESPECT TO THE PRODUCT(S) OR SERVICES GIVING RISE TO SUCH LIABILITY OR (B) ONE MILLION DOLLARS ($1,000,000). NOTWITHSTANDING ANYTHING TO THE CONTRARY CONTAINED HEREIN, IN NO EVENT SHALL SELLER BE LIABLE FOR ANY INDIRECT, SPECIAL, CONSEQUENTIAL OR INCIDENTAL DAMAGES (INCLUDING WITHOUT LIMITATION DAMAGES FOR LOSS OF USE OF FACILITIES OR EQUIPMENT, LOSS OF REVENUE, LOSS OF DATA, LOSS OF PROFITS OR LOSS OF GOODWILL), REGARDLESS OF WHETHER SELLER (a) HAS BEEN INFORMED OF THE POSSIBILITY OF SUCH DAMAGES OR (b) IS NEGLIGENT.

6. Buyer acknowledges that the provision by Seller of products (including components and spare parts), software, services (including warranty services), technology or intellectual property, including technical information supplied by Seller or contained in documents (collectively Items), is subject to applicable export controls of the U.S. government and other jurisdictions, including but not limited to the European Union. These controls may require Seller or Buyer to first obtain a license (or similar requirement) from the relevant authority, or regulatory body. Seller shall not be liable to Buyer for any delay or failure to obtain the licenses or approvals that Seller reasonably believes are necessary. Buyer shall comply with all applicable export laws and regulations. Buyer shall not, without first obtaining from the relevant authority or regulatory body any license required to do so lawfully, export or re-export any Item (either directly or indirectly), to: (i) any restricted or embargoed country or any person or organization whose privilege to participate in exports has been denied or restricted by the applicable authority; or (ii) any person or organization who is involved in improper development or use of nuclear weapons, or of chemical/biological weapons (CBW) or missiles, or in terrorist activities. Buyer agrees not to use any supplied Item in restricted or prohibited activities such as nuclear explosives, unsafeguarded nuclear activities, chemical or biological weapons development, restricted rocket systems or missile systems, or restricted military purposes. Buyer will, on request (i) promptly provide written information correctly identifying the end user and end use of any Items (including any information as it may relate to a subsequent transfer of such Items by Buyer); and (ii) cooperate fully with Seller in any official or unofficial audit or inspection arising in respect of the Items under applicable export or import control laws or regulations. Buyer will ensure that the Buyers and end users to whom Buyer re-sells or transfers the Items agree in writing to the provisions of this Section and Buyer covenants to use its best efforts to enforce such provisions against Buyers and end users. Buyer shall indemnify and hold Seller harmless from, or in connection with, any violation of this Section by Buyer or its employees, consultants, agents and/or representatives. In addition, failure of Buyer to comply with this Section shall be a material breach of this Agreement and shall entitle Seller to immediately terminate this Agreement. Seller shall be entitled to terminate this Agreement without prior notice if such termination is necessary in order to comply with applicable export laws and regulations.

*****

THERMO FISHER CONFIDENTIAL & PROPRIETARY
This document and all information and expression contained herein are the property of Thermo Fisher Scientific, Inc., are provided in confidence, and may not, in whole or in part, be used, duplicated, or disclosed for any purpose without prior written permission of Thermo Fisher Scientific, Inc. All rights reserved.

This Addendum and the Terms together form an agreement ("Agreement") between Buyer and Seller. The Agreement constitutes the entire understanding between the Buyer and Seller and shall not be amended, altered or changed except by a written agreement signed by the Parties hereto. In the event of a conflict between this Addendum and the Terms, the terms of this Addendum shall prevail. Any additional or conflicting terms and conditions to those in the Agreement, either written or verbal, are of no force and effect upon the Parties.

The Parties agree that this Agreement shall apply to all purchase orders issued by Buyer until November 6, 2026, whether or not such terms are included with or incorporated by reference in such orders.

IN WITNESS WHEREOF, the Parties have caused this Addendum to be duly executed on the date last signed by the Parties herein below.

TARRANT COUNTY

By:	
Name:	
Title:	
Date:	

THERMO ELECTRON NORTH AMERICA LLC

By:	Kadija Locklear Digitally signed by Kadija Locklear Date: 2025.11.19 12:37:56 -05'00'
Name:	Kadija Locklear
Title:	Contract Specialist II
Date:	11/19/2025

THERMO FISHER CONFIDENTIAL & PROPRIETARY
This document and all information and expression contained herein are the property of Thermo Fisher Scientific, Inc., are provided in confidence, and may not, in whole or in part, be used, duplicated, or disclosed for any purpose without prior written permission of Thermo Fisher Scientific, Inc. All rights reserved.

TAKINGS IMPACT ASSESSMENT CHECKLIST

Complete this form for any county action that involves the adoption of a regulation, policy, guideline, court resolution, or order.

Project/Regulation Name Consideration of Contract - RFP No. F2025162 - Annual Contract for Liquid Chromatography-Mass Spectrometry Instrument and Maintenance - Medical Examiner's Office - Thermo Electron North America, LLC – Per Contract Terms

County Department: PURCHASING

Contact Person: Melissa Lee, C.P.M., A.P.P.

Phone Number for Contact Person: (817) 884-3245

Type of TIA Performed: (SHORT TIA) or FULL TIA. Circle one after answering the questions in Sections II and III below.

****

I. Stated Purpose

Attach to this checklist an explanation of the purpose of the regulation, policy, guideline, court resolution or order.

****

Note: The remainder of this Takings Impact Assessment Checklist should be completed in consultation with the Criminal District Attorney's Office.

II. Potential Effect on Private Real Property

1. Does the county action require a physical invasion, occupation or dedication of real property?

   Yes_____ No __√__

2. Does the county action limit or restrict a real property right, even partially or temporarily?

   Yes_____ No __√__

If you answered yes to either question, go to Section III. If you answered no to both, STOP HERE and circle SHORT TIA at the top of the form.

****

TARRANT COUNTY
COMMISSIONERS COURT COMMUNICATION

Court Date: December 9, 2025	**Court Order #:**	**Page:** 1 of 6
Department: Purchasing	**Prepared By:** Teresa Lobacz	**Approved By:** Christopher Lax, CPSM, CPSD, CPCP

SUBJECT:

Consideration of Cooperative with Texas Smart Buy for Vehicle Rental Services - Texas Smart Buy Contract #975-C1 - Countywide - Enterprise Holdings, Inc.

***** CONSENT AGENDA *****

COMMISSIONERS COURT ACTION REQUESTED

It is requested that the Commissioners Court consider use of cooperative for Vehicle Rental Services, Countywide, utilizing the Statewide Procurement Division, TxSmartBuy Contract #975-C1, with Enterprise Holdings, Inc.

BACKGROUND

Tarrant County utilizes the State of Texas Smart Buy Contract #975-C1 for vehicle rentals from Enterprise Holdings, Inc.

The Statewide Procurement Division has contracted with the above vendor to provide discounted rental car services for state travelers. TxSmartBuy Contract #975-C1 for rental vehicles is used Countywide by employees for County business both in and out of state travel. Reservations for rental cars are made directly by contacting the rental car company directly.

The Cooperative contract term is from July 22, 2025, to August 1, 2026. Subject to continued funding by the Commissioners Court, this agreement shall automatically renew August 2, 2027, August 2, 2028, and August 2, 2029, hereafter for three (2) twelve (12) month periods and (1) one final, seven(7) month period ending on January 31, 2030, unless sooner terminated by either party as provided herein.

TxSmartBuy cooperative contracts are open to state and local government agencies in accordance with Government Code Title 7, Chapter 791, Subchapter C, Section 791.025, Contracts for Purchases.

FISCAL IMPACT

There is no fiscal impact associated with this item.

Attachments

Enterprise Backup

Texas Comptroller of Public Accounts

0 (/)

Contract Details: # 975-C1

Number	975-C1
Description	Vehicle Rental Services
Category	Travel
Type	Term
Start Date	7/22/2025
End Date	8/1/2026
Purchase Category Code (Agencies Only)	PCC A
Optional Renewal Terms	August 2, 2026, through, August 1, 2027 August 2, 2027, through, August 1, 2028 August 2, 2028, through, August 1, 2029 August 2, 2029, through, January 31, 2030
Purchase Orders	**Paying for Rental Car Services** This contract contains line items that may be available through multiple contractors. Agencies should document its best value determination when selecting other than the lowest-priced contractor. Once a determination has been made, each state entity has different arrangements for paying for rental cars. They may be paid in one of several ways: • with an individual state-issued corporate travel charge card; • with your personal non-state charge card; • by direct-bill with a one-trip travel voucher issued by your state entity or without a voucher, if direct billing has been set-up by your state entity; • or, by special advance arrangement, with cash or debit card (i.e., you cannot just walk up to the counter and rent a car on a cash basis; you will be required to "guarantee" payment with a charge card), • internal purchase orders must reference the CPA Contract Number and current item description(s) and pricing as stated on this contract. Before renting a vehicle, check with your entity's travel coordinator to find out the method of payment that has been established for your entity. If you get to the rental counter without this information, you may not be able to obtain a vehicle.
NIGP Codes(s)	97514 ; 97586

CPA Contract Management	Questions regarding contract management issues, price changes, amendments or other post-award concerns should be directed to: SPD Contract Management Office (SCMO) Texas Comptroller of Public Accounts (CPA) Phone: (512) 463-3034 option 3 Email: spd.cmo@cpa.texas.gov (mailto:spd.cmo@cpa.texas.gov)
Contract Specifics/Notes	For information regarding rates, one-way fees, additional authorized drivers, and various other frequently asked questions, please refer to the State Travel Program (https://comptroller.texas.gov/purchasing/programs/travel-management/rental/) website or by following the links below: The Hertz Corporation Base Contract (https://www.naspovaluepoint.org/portfolio/passenger-vehicle-and-box-truck-rentals/hertz/) The Hertz Corporation Vehicle and Box Truck Rental Rates (https://www.txsmartbuy.gov/SSP%20Applications/NetSuite%20Inc.%20-%20Shopping/Custom%20ShopFlow/Documents/Contract%20Attachments/975C1%20Hertz%20Vehicle%20Rates.pdf) EAN Services, LLC Base Contract (https://naspovaluepoint.org/portfolio/passenger-vehicle-and-box-truck-rentals/ean-services/) EAN Services, LLC Vehicle Rental Rates (https://www.txsmartbuy.gov/SSP Applications/NetSuite Inc. - Shopping/Custom ShopFlow/Documents/Contract Attachments/975C1 Enterprise Vehicle Rates_v2.pdf) EAN Services, LLC Truck Rental Rates (https://www.txsmartbuy.gov/SSP Applications/NetSuite Inc. - Shopping/Custom ShopFlow/Documents/Contract Attachments/975C1 Enterprise Truck Rates_v2.pdf) **The Hertz Corporation Privacy Policy:** Customers may opt out of Hertz data collection of personally identifiable information in person at rental locations or by visiting their Privacy Policy (https://privacy-central.eu.securiti.ai/#/dsr-universal/004d4ae7-cfd4-4284-a5ce-7123884f2ca7) website. If Customers choose not to opt out, they may be subject to Hertz's right to sell, disclose, or share information for cross contextual marketing purposes. **EAN Services, LLC Privacy Policy:** Customers may opt out of Enterprise Holdings, Inc. data collection of personal information through Enterprise Holdings, Inc.'s Global Privacy Policy (https://privacyportal.onetrust.com/webform/b7f28d27-6bb9-46d7-a7f4-c89ba7faf08f/92291ac1-2eeb-412c-9770-b45aab9f5bc0) call 1 (877) 858-3885, or by mail at Enterprise Holdings, Inc., Privacy Questions, 600 Corporate Park Drive, St. Louis, MO 63105.
Adding New Products to the Contract	Additional products or services of the same general category that are not already on the contract may be added by submitting an Open Market Requisition (https://comptroller.texas.gov/purchasing/forms/) to the Statewide Contract Development section at open.market@cpa.texas.gov (mailto:open.market@cpa.texas.gov)
Delivery Delays by Contractor	If delay is foreseen, Contractor shall give written notice to the Customer and must keep Customer advised at all times of status of order. Default in promised Delivery Days After Receipt of Order (ARO) without accepted reasons or failure to meet specifications authorizes the Customer to purchase goods and services of this contract elsewhere and charge any increased costs for the goods and services, including the cost of re-soliciting, to the Contractor. Failure to pay a damage assessment is cause for contract cancellation and/or debarment or removal of the contractor, as applicable, from the State's Centralized Master Bidders List (CMBL).

Purchase Order Cancellations	The Customer may request that a Contractor cancel a specific line item or an entire purchase order. There shall be no fees charged for cancellation of an item and/or order prior to shipment by the Contractor. A Purchase Order Change Notice should be processed and sent to Contractor.
Contract Performance	The Statewide Procurement Division Contract Management Office (SCMO), a division of the Comptroller of Public Accounts (CPA), administers a vendor performance program for use by all customers per Texas Government Code (TGC), §2262.055, and 34 Texas Administrative Code (TAC), §20.108. The Vendor Performance relies on the customer's participation in gathering information on vendor performance. State agency customers shall report vendor performance on purchases of $25,000 or more from contracts administered by CPA, or any other purchase of $25,000 or more made through delegated authority granted by CPA (TAC 20.108), or purchases exempt from CPA procurement rules and procedures. State agencies are additionally encouraged to report vendor performance on purchases under $25,000. Vendor Performance shall be reported through the CPA VENDOR PERFORMANCE TRACKING SYSTEM (https://www.comptroller.texas.gov/purchasing/programs/vendor-performance-tracking/). The purpose of the Vendor Performance Tracking System is to: • Identify vendors that have exceptional performance • Aid purchasers in making a best value determination based on vendor past performance • Protect the state from vendors with unethical business practices • Track vendor performance for delegated and exempt purchases

Contractors

Contractor VID: 14307248352
Contractor: EAN Services, LLC
Contact Name: Billy Hensley
Email: Billy.H.Hensley@em.com
Phone: (972) 741-1154
Alternate Contact Name: Dan Culver
Alternate Email: Daniel.J.Culver@em.com
Alternate Phone: (210) 825-5025
Address: EAN Services, LLC 600 Corporate Park Drive Saint Louis MO 63105

Contractor VID: 11319385685
Contractor: The Hertz Corporation
Email: Nadika.Perera@hertz.com
Phone: (239) 301-7635
Address: 8501 Williams Road Estero FL 33928

Texas Homeland Security (https://www.dhs.gov/see-something-say-something/reporting/texas)

Public Information Act (https://comptroller.texas.gov/about/policies/open-records/public-information-act.php)

Texas Secretary of State (https://www.sos.state.tx.us/)

HB 855

Other State Sites

Texas.gov (https://texas.gov)

Texas Records and Information Locator(TRAIL) (https://www.tsl.state.tx.us/trail/)

State Link Policy (https://dir.texas.gov/resource-library-item/state-website-linking-privacy-policy)

Texas Veterans Portal (https://veterans.portal.texas.gov)

TAKINGS IMPACT ASSESSMENT CHECKLIST

Complete this form for any county action that involves the adoption of a regulation, policy, guideline, court resolution, or order.

Project/Regulation Name: Consideration of Cooperative with Texas Smart Buy for Vehicle Rental Services – Texas Smart Buy Contact #975-C1 – Countywide – Enterprise Holdings

County Department: PURCHASING

Contact Person: Melissa Lee, C.P.M., A.P.P.

Phone Number for Contact Person: (817) 884-3245

Type of TIA Performed: (SHORT TIA) or FULL TIA. Circle one after answering the questions in Sections II and III below.

****

I. Stated Purpose

Attach to this checklist an explanation of the purpose of the regulation, policy, guideline, court resolution or order.

****

Note: The remainder of this Takings Impact Assessment Checklist should be completed in consultation with the Criminal District Attorney's Office.

II. Potential Effect on Private Real Property

1. Does the county action require a physical invasion, occupation or dedication of real property?

   Yes_____ No __√__

2. Does the county action limit or restrict a real property right, even partially or temporarily?

   Yes_____ No __√__

If you answered yes to either question, go to Section III. If you answered no to both, STOP HERE and circle SHORT TIA at the top of the form.

****

TARRANT COUNTY
COMMISSIONERS COURT COMMUNICATION

Court Date: December 9, 2025	**Court Order #:**	**Page:** 1 of 4
Department: Purchasing	**Prepared By:** Tara West	**Approved By:** Christopher Lax, CPSM, CPSD, CPCP

SUBJECT:

Consideration of Interlocal Agreement between Tarrant County and White Settlement Independent School District for Cooperative Purchasing of Goods and Services

*****CONSENT AGENDA *****

COMMISSIONERS COURT ACTION REQUESTED

It is requested that the Commissioners Court consider an Interlocal Agreement between Tarrant County and White Settlement Independent School District for Cooperative Purchasing of Goods and Services.

BACKGROUND

Periodically, Tarrant County enters into Cooperative Purchasing Interlocal Agreements with various other political entities in accordance with the Texas Intergovernmental Cooperation Act, Chapter 791, Texas Government Code. The agreements allow those entities to purchase goods and services under existing Tarrant County annual contracts.

The attached agreement was signed by Kim Alexander, Business Director of White Settlement School District, on November 18, 2025. It is being presented to the Commissioners Court for consideration and signature.

FISCAL IMPACT

There is no fiscal impact associated with this item.

PASSED AND APPROVED on December 9, 2025.

COUNTY OF TARRANT
STATE OF TEXAS

By: Separate Electronic Signature Page
Tim O'Hare
County Judge

APPROVED AS TO FORM:

_____
District Attorney's Office*

*By law, the District Attorney's Office may only approve contracts for its clients. We reviewed this document as to form from our client's legal perspective. Other parties may not rely on this approval. Instead, those parties should seek contract review from independent counsel.

Attachments

White Settlement ISD Interlocal Attachment 12 09 25.pdf

INTERLOCAL AGREEMENT

BETWEEN COUNTY OF TARRANT AND White Settlement Independent School Dist

This Agreement is made this 18 day of November, 2025 between the County of Tarrant, Texas and White Settlement Independent School District.

Pursuant to the authority granted by the "Texas Interlocal Cooperation Act," Chapter 791 Texas Government Code providing for the cooperation between local governmental bodies, the parties hereto, in consideration of the premises and mutual promises contained herein, agree as follows:

WHEREAS, the contract is made under the authority of Sections 791.001-791.029 of the Texas Government Code; and,

WHEREAS, the parties, in performing governmental functions or in paying for the performance of governmental functions hereunder shall make that performance or those payments from current revenues legally available to that party;

WHEREAS, the governing bodies of each party find that the subject of this contract is necessary for the benefit of the public and that each party has the legal authority to perform and to provide the governmental function or service which is the subject matter of this contract; furthermore, the governing bodies find that the performance of this contract is in the common interest of both parties; and that the division of cost fairly compensates the performing party for the services under this contract.

I.

White Settlement Independent School District, hereby makes, constitutes and appoints Tarrant County its true and lawful purchasing agent for the purchase of various commodities using Annual Contracts (Bids). Tarrant County will maintain a listing of Annual Contracts which are available for local entities use. Tarrant County will forward a copy of requested Annual Contract to the requesting entity. White Settlement Independent School District agrees that Tarrant County shall serve as the purchasing agent for selected items, and agrees that the bidding shall be conducted by Tarrant County according to its usual bidding procedures and in accordance with applicable State statutes.

II.

White Settlement Independent School District agrees that all specifications for selected items shall be determined by Tarrant County.

III.

White Settlement Independent School Disti agrees to pay the supplier for all goods, equipment and products pursuant to this Agreement. The successful bidder or bidders shall bill White Settlement Independent School Disti directly for all items purchased, and White Settlement Independen shall be responsible for vendor's compliance with all conditions of delivery and quality of the purchased items.

IV.

Nancy Escobar (name), Purchasing Coordinator (title) is hereby designated as the official representative to act for White Settlement Independent School District in all matters relating to this Agreement.

V.

This Agreement shall take effect upon execution by both signatories.

VI.

This Agreement shall be in effect from the date of execution until terminated by either party to the Agreement upon written thirty (30) days' notice prior to cancellation.

IN WITNESS WHEREOF, the parties hereto have caused this Agreement to be executed by their authorized officers the day and year first above written.

TARRANT COUNTY	**(Entity)** White Settlement Independent School Distric
BY: _____	BY: Kim Auxand
TITLE: _____	TITLE: Business Director
DATE: _____	DATE: November 18, 2025

TAKINGS IMPACT ASSESSMENT CHECKLIST

Complete this form for any county action that involves the adoption of a regulation, policy, guideline, court resolution, or order.

Project/Regulation Name: Consideration of Interlocal Agreement Between Tarrant County and White Settlement Independent School District for Cooperative Purchasing of Goods and Services

County Department: PURCHASING

Contact Person: Melissa Lee, C.P.M., A.P.P.

Phone Number for Contact Person: (817) 884-3245

Type of TIA Performed: (SHORT TIA) or FULL TIA. Circle one after answering the questions in Sections II and III below.

****

I. Stated Purpose

Attach to this checklist an explanation of the purpose of the regulation, policy, guideline, court resolution or order.

****

Note: The remainder of this Takings Impact Assessment Checklist should be completed in consultation with the Criminal District Attorney's Office.

II. Potential Effect on Private Real Property

1. Does the county action require a physical invasion, occupation or dedication of real property?

   Yes _____ No ___√___

2. Does the county action limit or restrict a real property right, even partially or temporarily?

   Yes _____ No ___√___

If you answered yes to either question, go to Section III. If you answered no to both, STOP HERE and circle SHORT TIA at the top of the form.

****

TARRANT COUNTY
COMMISSIONERS COURT COMMUNICATION

Court Date: December 9, 2025	**Court Order #:**	**Page:** 1 of 2
Department: Resource Connection	**Prepared By:** Jamie Willis	**Approved By:** Jamie Willis

SUBJECT:

Consideration of Amendment No. 1 to the Lease Agreement between Tarrant County and Texas A&M AgriLife Services for Space Located at the Resource Connection

*****CONSENT AGENDA *****

COMMISSIONERS COURT ACTION REQUESTED

It is requested that the Commissioners Court consider Amendment No. 1 to the lease agreement between Tarrant County and Texas A&M AgriLife Services (AgriLife) for space located at the Resource Connection Campus, 1200 Circle Drive, Suite 303.

BACKGROUND

On October 1, 2024, the Commissioners Court, through Court Order #144031 and in accordance with Section 263.007 (e), Local Government Code, authorized a thirty (30) day posting of a proposed lease to AgriLife.

On February 4, 2025, the Commissioners Court, through Court Order #144722, approved a lease agreement between Tarrant County and AgriLife to occupy 464 square feet of office and lab space at the Resource Connection campus. The term of this original lease is February 1, 2025 through December 31, 2025, at a rate of $545.35 per month with one (1) option to renew the agreement for one (1) year.

With approval of Amendment No. 1, the term of the original lease agreement will be extended through December 31, 2026, at a rate of $545.35 per month.

The Criminal District Attorney's Office has reviewed this document as to form.

FISCAL IMPACT

The rental of this space will generate approximately $6,544.20 in total revenue during the lease term with $4,908.15 generated in FY 2026 and $1,636.05 generated in FY 2027. Funds for FY 2026 will be placed in the following Resource Connection accounts as appropriate:

Building Rental – 10000-2026 General Fund/3420100000 Resource Connection/471001 Building Rental
Utility Billings – 10000-2026 General Fund/3420100000 Resource Connection/471008 Utility Billings
Other RC Rental (includes Common Area) - 10000-2026 General Fund/3420100000 Resource Connection/471002 Other Resource Connection Rental
Janitorial/Disposal - 10000-2026 General Fund/3420100000 Resource Connection/471011 Janitorial Disposal

PASSED AND APPROVED on December 9, 2025.

COUNTY OF TARRANT
STATE OF TEXAS

By: Separate Electronic Signature Page
Tim O'Hare
County Judge

APPROVED AS TO FORM:

_____
District Attorney's Office*

*By law, the District Attorney's Office may only approve contracts for its clients. We reviewed this document as to form from our client's legal perspective. Other parties may not rely on this approval. Instead, those parties should seek contract review from independent counsel.

Attachments

AgriLife Apiary Amendment No. 1.pdf

Docusign Envelope ID: DEDC1580-D392-49A8-9D48-6ED076B2C81E

TARRANT COUNTY	**§**	***RESOURCE CONNECTION***
	§	**LEASE AGREEMENT AMENDMENT NO. 1**
STATE OF TEXAS	**§**	**TEXAS A&M AGRILIFE EXTENSION SERVICE**

BY THIS LEASE AGREEMENT AMENDMENT NO. 1 (the "Amendment")**,** Court Order 144722 (AgriLife M2500634), dated the 4th day of February, 2025 (the "Agreement"), by and between Tarrant County, hereinafter referred to as LICENSOR, and Texas A&M AgriLife Extension Service hereinafter referred to as LICENSEE, is hereby amended and supplemented in the following respects:

PAGE 10, EXHIBIT "C" TERM AND RENEWAL OPTION

The Term of the Agreement shall begin on January 1, 2026. The first renewal ("Renewal Term") will end December 31, 2026. Either party may terminate this Lease, during the renewal Term, upon the delivery of written notice delivered to the Tenant or the County setting forth the date of any such termination ("Termination Date") not later than ninety (90) days prior to any such Termination Date.

The following is hereby added to the end of Section 18. Availability of Funding:

Notwithstanding any language to the contrary, LICENSEE acknowledges LICENSOR is a governmental entity and agrees LICENSOR may terminate this Agreement for future fiscal years if sufficient funding is not appropriated or allocated.

The following is hereby added to Section 14. Miscellaneous Provisions as 14(i):
Texas A&M AgriLife Extension Service acknowledges that it is a "governmental entity" and not a "business entity" as those terms are defined in Tex. Gov't Code § 2252.908, and therefore, no Form 1295 disclosure of interested parties pursuant to Tex. Gov't Code Section 2252.908 is required.

The following is hereby added to the Agreement as Section 29:

Execution of Agreement. This Agreement may be executed in one or more counterparts, each of which will be deemed to be an original copy of this Agreement, and all of which, when taken together, shall be deemed to constitute one and the same Agreement. The exchange of copies of this Agreement and of signature pages by electronic transmission shall constitute effective execution and delivery of this Agreement as to the parties and may be used in lieu of the original Agreement for all purposes. Signatures of the parties transmitted or executed electronically shall be deemed to be their original signatures for any purpose whatsoever.

Both parties are in agreement as to the above. All other provisions of the above-mentioned Agreement remain in full force and effect. This Amendment is effective upon execution of this amendment.

PASSED AND APPROVED on _____.

Docusign Envelope ID: DEDC1580-D392-49A8-9D48-6ED076B2C81E

COUNTY OF TARRANT
STATE OF TEXAS

By: _Separate Electronic Signature Page__
Tim O'Hare
County Judge

TEXAS A&M AGRILIFE EXTENSION SERVICE

By: DocuSigned by: Donna Alexander 72FC25C2A549419...
Authorized Agent
Donna Alexander
Asst. Director, Agency & CFO

November 21, 2025 | 10:30 AM PST

APPROVED AS TO FORM:

__Separate Electronic Signature Page_____
Criminal District Attorney's Office*
*By law, the Criminal District Attorney's Office may only approve contracts for its clients. We reviewed this document as to form from our client's legal perspective. Other parties may not rely on this approval. Instead, those parties should seek contract review from independent counsel.

TARRANT COUNTY
COMMISSIONERS COURT COMMUNICATION

Court Date: December 9, 2025	**Court Order #:**	**Page:** 1 of 23
Department: Sheriff	**Prepared By:** Matt Pedersen, Commander	**Approved By:** Matt Pedersen, Commander

SUBJECT:

Consideration of Fiscal Year 2026 Agency Interlocal Assistance Agreement with the City of Bedford for Participation in the Tarrant Regional Auto Crimes Task Force

*****CONSENT AGENDA *****

COMMISSIONERS COURT ACTION REQUESTED

It is requested that the Commissioners Court consider the FY 2026 Interlocal Assistance Agreement (IAA) with the City of Bedford for participation in the Tarrant Regional Auto Crimes Task Force (Task Force).

BACKGROUND

On August 19, 2025, the Commissioners Court, through Court Order #145701, accepted a Grant Award from the Texas Motor Vehicle Crime Prevention Authority for the Tarrant Regional Auto Crimes Task Force in the amount of $2,088,421.00, with additional matching funds of $703,204.00. This award amount included funding for the City of Lake Worth totaling $109,268.00 for the salary, benefits, and overtime for one (1) Task Force position.

On August 26, 2025, the City of Lake Worth notified the Task Force of its intention to opt out of participation pending city council approval. On September 16, 2025, the Lake Worth City Council approved terminating participation effective September 30, 2025.

On October 14, 2025, the Commissioners Court, through Court Order #146134, approved the termination of the IAA with the City of Lake Worth, which resulted in a vacant position within the Task Force funded by the grant.

On November 18, 2025, the Bedford City Council approved the Bedford Police Department's request to participate in the Task Force through this proposed IAA, which obligates $107,009.00 for salary and benefits and a cash match of $26,752.00.

The difference between the previously approved City of Lake Worth allocation ($109,268.00) and the City of Bedford allocation ($112,039.00) is $2,771.00. This difference will be reconciled through a grant adjustment using funds already approved and available under the FY 2026 Task Force grant.

The term of the agreement is from December 9, 2025, through August 31, 2026, with the opportunity for annual re-application depending on state grant funding and approvals.

The District Attorney's Office has approved this IAA as to form.

FISCAL IMPACT

There is no fiscal impact to the Tarrant County FY 2026 General Fund.

Sheriff / Texas Motor Vehicle Crime Prevention Authority Grant (GRANT-2004/M0022-2026/2110510000 Sheriff Patrol/575611 Contract Labor)

Sheriff / Texas Motor Vehicle Crime Prevention Authority Grant (GRANT-2004/M0022-2026/2110510000 Sheriff Patrol/443301 City Participation)

PASSED AND APPROVED on December 9, 2025.

COUNTY OF TARRANT
STATE OF TEXAS

By: Separate Electronic Signature Page
Tim O'Hare
County Judge

APPROVED AS TO FORM:

_____
District Attorney's Office*

*By law, the District Attorney's Office may only approve contracts for its clients. We reviewed this document as to form from our client's legal perspective. Other parties may not rely on this approval. Instead, those parties should seek contract review from independent counsel.

Attachments

2026_AIAA_BPD_Signed(1).pdf

THE STATE OF TEXAS	**§**	**THIS ORIGINAL**
	§	**EXECUTED BY TARRANT COUNTY**
COUNTY OF TARRANT	**§**	**AND BY THE CITY OF BEDFORD**

THE TARRANT REGIONAL AUTO CRIMES TASK FORCE INTERLOCAL ASSISTANCE AGREEMENT

WHEREAS the detection, apprehension, and prosecution of individuals who commit motor vehicle crimes (defined herein as "motor vehicle theft, burglary of a motor vehicle, and fraud-related motor vehicle crime") is often hindered because the range of operations of the criminal offender is greater than the jurisdiction of the peace officers called upon to investigate the crime; and,

WHEREAS the existence of a multiplicity of political jurisdictions in Tarrant, Jack, Hood, Palo Pinto, Parker, Somervell, and Wise Counties impedes the effectiveness of individual law enforcement agencies to detect and eradicate automobile-related crimes; and,

WHEREAS past experience has indicated that a cooperative effort between law enforcement agencies and Tarrant County has been effective in detecting and deterring the activities of targeted criminal groups to the mutual benefit of all the political entities of Tarrant County and neighboring counties; and,

WHEREAS pursuant to Chapter 362 of the Texas Local Government Code, the Texas Interlocal Cooperation Act, Chapter 791 of the Texas Government Code, Texas Administrative Code, Title 43; Part 3; Chapter 57 and Chapter 1006 of the Texas Transportation Code, the contracting governmental entities, to-wit: Arlington, Euless, Fort Worth, Grapevine, Haltom City, Hurst, Bedford, Weatherford, White Settlement, the County of Parker, the County of Tarrant, and the County of Wise, together with the Tarrant County Criminal District Attorney and the Tarrant County Sheriff, hereby agree to participate in, and be a part of the cooperative investigative, enforcement, and prevention efforts which are known and designated as the Tarrant Regional Auto Crimes Task Force; and,

WHEREAS each of the contracting governmental entities makes the following findings:

a. This Agreement serves the common interests of all parties;
b. This Agreement will benefit the public;
c. The division of costs fairly compensates all parties to this Agreement; and
d. Each entity has authorized its representative to sign this Agreement;
e. Each entity acknowledges that it is a "governmental entity" and not a "business entity" as those terms are defined in Tex. Gov't Code § 2252.908, and therefore, no disclosure of interested parties pursuant to Tex. Gov't Code Section 2252.908 is required;

and,

WHEREAS, during the performance of the governmental functions and the payment for the performance of those governmental functions under this Agreement, the parties will make the performance and payment from current revenues legally available to that party; and

WHEREAS a grant of money from the Texas Motor Vehicle Crime Prevention Authority has been received to fund the continuation of the Tarrant Regional Auto Crimes Task Force.

NOW, THEREFORE, BE IT KNOWN BY THESE PRESENTS:

That Tarrant County, acting by and through its duly authorized County Judge, the Criminal District Attorney of Tarrant County, the Sheriff of Tarrant County, and the governmental entities that have executed, are executing, or will execute substantially similar copies hereof at this time or in the future during the time that this Agreement is in force, acting herein by and through their duly authorized chief administrative officer, do hereby covenant and agree as follows:

TASK FORCE

The Tarrant Regional Auto Crimes Task Force ("Task Force") will be a part of the Tarrant County Sheriff's Office for administrative purposes. The activities of the Task Force shall be supervised by a fourteen (14) member Board of Governors. This Board will include as permanent voting members the Fort Worth Chief of Police, the Arlington Chief of Police, the Tarrant County Criminal District Attorney, and a Chairperson, who shall be the Tarrant County Sheriff. Additionally, the Board will consist of an executive of every additional agency that participates in the Task Force with personnel, to include: The Police Chiefs of Euless, Grapevine, Haltom City, Hurst, Bedford, Weatherford, White Settlement, the Parker County Sheriff, the Wise County Sheriff, and a Regional Director of the National Insurance Crime Bureau. Ex-officio members, if any, may be added by agreement of the voting members; ex-officio members shall be non-voting. The Board of Governors shall have the responsibility for policy, direction, and control of the Task Force. The Board of Governors will have direct responsibility for the selection of a Commander for the Task Force. The Board will monitor the activities and accomplishments of the Task Force to ensure orderly progress towards attainment of all stated objectives.

There will be one unit, which may form sub-groups or teams as appropriate. The activities and investigations of these sub-groups or teams shall be led by the Sgt. Team Leader at the direction of the Commander of the Task Force. These sub-groups or teams will have the duties assigned to them by the Sgt. Team Leader at the approval of the Commander.

AUTOMOBILE RELATED CRIMES INVESTIGATIONS

Automobile-related crimes investigations within the jurisdictional bounds of the entities joining this Agreement may be coordinated through the Task Force. All commercial auto crimes intelligence received by a law enforcement agency that is a party to this Agreement may be referred to the Task Force for investigation. The assigned officers will respond to complaints in a timely manner. The Task Force will conduct salvage business inspections, covert operations, training, arrests, investigations, assistance to other agencies and public awareness education in an effort to lower the auto crimes rate.

ASSET SEIZURES

All asset seizures developed by the Task Force in Tarrant County under Chapter 59 of the Code of Criminal Procedure, as well as any criminal acts, will be prosecuted by the Tarrant County Criminal District Attorney's Office.

There is hereby created a certain fund to be known as the Auto Crimes Task Force Asset Seizure Fund (hereinafter called "Fund"), said Fund to be created in compliance with State law and the requirements of the grant restrictions.

FORFEITURE POLICY

Upon entry of a judgment in a judicial proceeding awarding monies or other proceeds to the Tarrant Regional Auto Crimes Task Force, said monies or proceeds will be immediately deposited in the Auto Crimes Task Force Seizure Fund. The monies and proceeds in this Fund must be used to further the purpose of the Task Force as required by the Tarrant Regional Auto Crimes Task Force Grant award: Enhancement of currently funded and/or future automobile-related crimes enforcement and prevention programs.

All forfeiture funds and other generated program income shall be subject to audit by the Auditor of Tarrant County, Texas, and the Texas Motor Vehicle Crime Prevention Authority.

Any conveyance or vehicle that is the subject of a final forfeiture shall be awarded to the Task Force to be used to further the purpose of the Task Force as required by the Task Force grant award.

Upon termination of this Agreement, ownership of equipment, hardware, and other non-expendable items will revert to the applicant for which it was acquired, subject to the approval of the Motor Vehicle Crime Prevention Authority of the State of Texas.

OFFICER STATUS

Any peace officer assigned to the Task Force by a government entity which is a party to this Agreement shall be empowered to enforce all laws and ordinances applicable in the jurisdiction of the county and municipal entities signatory to this Agreement, including the power to make arrests, execute search warrants, and investigate auto crimes offenses outside of the geographical jurisdiction from which he or she is assigned, but within the area covered by the jurisdictions of the counties and municipal entities which are parties to this Agreement.

While functioning as a peace officer assigned to the Task Force, he or she shall have all of the law enforcement powers of a regular peace officer of such other political entity.

A peace officer who is assigned, designated, or ordered by the official designated by the governing body of any entity to perform law enforcement duties as a member of the Task Force shall receive the same wage, salary, pension and all other compensation and all other rights for such service, including injury or death benefits and workers' compensation benefits, paid in accordance with the Texas Motor Vehicle Crime Prevention Authority Grant Guidelines, as existing or as may be amended, and applicable law, as though the service had been rendered within the limits of the entity from which he or she was assigned. Recognizing the benefits to a participating entity to this agreement, it is agreed that all wage and disability payments, including workers' compensation benefits, pension payments, damage to equipment (with the exception of leased vehicles, for which damages will be covered under the provisions of the lease(s) and clothing, medical expense and expense of travel, food and lodging shall be paid in accordance with the Texas Motor Vehicle Crime Prevention Authority Grant Guidelines, as existing or as may be amended. However, peace officers assigned to the Task Force will not work

overtime that is not reimbursable to their assigning agency without prior approval from their assigning agency supervisor. (For example, Fort Worth police officers assigned to the Task Force will not work Task Force overtime, which is not reimbursable to the Fort Worth Police Department, without prior approval from their Fort Worth police supervisor.) Instead, they will be permitted to flex their work hours as necessary to accomplish Task Force objectives and assignments.

In further recognition of the benefit to be gained by the entity participating in the Task Force, it is agreed that no entity that is a party to this Agreement shall receive or be entitled to reimbursement from another entity participating in this Agreement for any services performed pursuant to this Agreement.

It is further agreed that, in the event that any peace officer assigned to the Task Force is cited as a party defendant to any civil lawsuit, state or federal, arising out of his or her official acts while functioning as a peace officer assigned to the Task Force, said peace officer shall be entitled to the same benefits that such officer would be entitled to receive had such civil action risen out of an official act within the scope of his or her duties as a member and in the jurisdiction of the law enforcement agency from which he or she was assigned. Further, no entity shall be responsible for the acts of a peace officer of another entity assigned to the Task Force. Each entity participating herein indemnifies and holds all other participating entities harmless for all acts of its own officers and employees acting hereunder, to the full extent permitted by law.

GENERAL PROVISIONS

This Contract is subject to all grant conditions applicable to the grant of the Texas Motor Vehicle Crime Prevention Authority to the Tarrant Regional Auto Crimes Task Force.

Each party to this Agreement expressly waives all claims against every other party for compensation for any loss, damage, personal injury, or death occurring as a consequence of the performance of this Agreement.

Third party claims against members shall be governed by the Texas Tort Claims Act or other appropriate statutes and laws of the State of Texas and the United States.

It is expressly understood and agreed that, in the execution of this Agreement, no party waives, nor shall be deemed hereby to waive, any immunity or defense that would otherwise be available to it against claims arising in the exercise of governmental powers and functions.

The validity of this Agreement and of any of its terms or provisions, as well as the rights and duties of the parties hereunder, shall be governed by the laws of the State of Texas.

In case any one or more of the provisions contained in this Agreement shall for any reason be held to be invalid, illegal, or unenforceable in any respect, such invalidity, illegality or unenforceability shall not affect any other provision thereof and this Agreement shall be construed as if such invalid, illegal or unenforceable provision had never been contained herein.

This Agreement shall become effective as to a party hereto on the day of the *execution of the Agreement by the party and shall continue in effect as to a participating entity for one year from the date of signature and thereafter until it has been terminated*

or rescinded by appropriate action of the participating entity's governing body or expires due to termination of the grant or by operation of law. (To minimize the administrative difficulty of signature between the many parties, each city or other law enforcement entity will sign a substantially similar agreement with Tarrant County; however, each party signing substantially similar copies is immediately bound one to another to all other entities participating during the time said agreement is in force as to said entity, even though the parties' signatures appear on different copies of the substantially similar copies. Any entity being added after the agreement is in effect need only sign the documents which Tarrant County signs to be fully a party bound to all other parties, and such signature shall, as of the date of the signing, have the same force and effect as between the joining and already-bound members as if a single document was signed simultaneously by all then-participating entities.)

If program enhancement activities are terminated, unexpended revenues will be promptly returned to the Texas Motor Vehicle Crime Prevention Authority.

This Agreement may be amended or modified by the mutual agreement of the parties hereto in writing. The Interlocal Agreement is for the period and on the conditions herein contained, and on such conditions to this Agreement as may be added by amendment or by law, and not for any period beyond that permitted by law, nor for any purpose not permitted by law.

This instrument contains all commitments and agreements of the parties, and no oral or written commitments have any force or effect to alter any term or condition of this Agreement, unless the same are done in proper form and in a manner constituting a bona fide amendment hereto.

The National Insurance Crime Bureau, a non-local entity, will enter a separate agreement with Tarrant County for the following reasons: The entity's staff member carries a statewide law enforcement commission and therefore does not require the enhanced law enforcement jurisdiction afforded by this Agreement; The entity funds their staff member's salary and fringe benefits 100%; and the entity's staff member performs in a support role to the Task Force and is available less than 100% of their work week because the availability of the staff member is subject to assignments from their entity.

The parties agree that their collective agreement may be evidenced by the execution of an identical counterpart of this instrument by the duly authorized official(s) of each participant and the failure of any anticipated member to enter into or renew this Agreement shall not affect the agreement between and among the parties executing the Agreement.

BUDGETARY MATTERS

As part of this Agreement, all participating entities entitled to reimbursement will be reimbursed for their participation in this program by grant funds, according to the entity's applicable submitted budget schedule, to the extent that the budget schedule is consistent with the grant. Reimbursement will be made through the grant's financial officer, who is presently Kimberly M. Buchanan, Auditor, Tarrant County, but is subject to change by Tarrant County. If changed, the change will be made in accordance with the grant and all participating entities will be advised in writing. To the extent that the budget schedule is inconsistent with the grant, the grant controls. *A copy of the latest and most current Grant Award Digest will be provided to all participating agencies when received*

by Tarrant County. Participating entities may bill the financial officer for reimbursement at such periodic intervals as are appropriate and in accordance with the grant.

As consideration for this agreement, Tarrant County ("**Grantee**") agrees to reimburse $ 107,009.00 for salary and fringe per the Budgetary Schedule, attached hereto, to the City of Bedford ("**Sub-Grantee**"). In consideration, the Sub-Grantee agrees to contribute match funds for salary and fringe in the amount of $ 26,752.00 for enhancement of the program with a full-time detective position to the grant program.

CONFIDENTIAL FUNDS

The Texas Motor Vehicle Crime Prevention Authority Guidelines for Control and Use of Confidential Funds will be utilized for the disbursement and reimbursement of confidential funds.

UNIFORM ASSURANCES

In accordance with §783.005 of the Texas Government Code Grantee and sub-grantee shall comply with the Uniform Assurances.

FINANCIAL ADMINISTRATION & REPORTING

In accordance with §783.006 of the Texas Government Code Standard Financial Management Conditions the prescribed are applicable to all grants and agreements executed between affected entities:

Financial Reporting: Accurate, current, and complete disclosure of the financial results of grant related activities must be made in accordance with the financial reporting requirements of the grant.

Accounting Records: Grantee will maintain records, which adequately identify the source and application of funds, provided for grant-related activities. These records will contain information pertaining to grant awards and obligations, unobligated balances, assets, liabilities, outlays or expenditures, and income.

Internal Control: Effective control and accountability will be maintained for all grant cash, real and personal property, and other assets. Grantee will safeguard all such property and assure that it is used for authorized grant purposes.

Page Budget Control: Actual expenditures will be kept within budgeted amounts for each grant.

Allowable Cost: Applicable cost principles, agency program regulations, and the terms of grant agreements shall be followed in determining the reasonableness, allowability, and allocability of costs.

Source Documentation: Accounting records must be supported by such source documentation as checks, paid bills, payroll records, receipts, timesheets, travel vouchers, and other records, etc. These source documents must be retained and made available for MVCPA staff when requested.

Cash Management: Grantee will establish reasonable procedures to ensure the receipt of reports on cash balances and cash disbursements in sufficient time to enable them to prepare complete and accurate cash transactions reports to the awarding agency.

Reimbursement Grant: All expenditures reported will be based on actual amounts paid and documented. Reporting budgeted amounts or estimated costs as

expenditures are not permitted and if used may result in payment suspension and possible termination of the grant.

Costs Incurred Outside the Program Period: Grant funds may not be obligated prior to the effective date without written permission of the MVCPA director or subsequent to the termination date of the grant period. All obligations must be consistent with the Statement of Grant Award and used for statutorily authorized purposes.

COMPLIANCE

Grantee and sub-grantee will comply with state law, program rules and regulations and the Statement of Grant Award. In addition, Grantee and sub-grantee represents and warrants that it will comply with all requirements imposed by the awarding agency concerning special requirements of law, program requirements, and other administrative requirements. Information, guidance and program rules can be found in the Motor Vehicle Crime Prevention Authority Grant Administrative Manual and if not found in the administrative manual, then grantee and sub-grantee must follow the Texas Grant Management Standards maintained under the authority of the Texas Comptroller of Public Accounts. These grant management standards are used by the Motor Vehicle Crime Prevention Authority in the administration of the MVCPA grant program.

Sub-grantee Monitoring and Management: The local government must monitor the activities of the sub-grantee as necessary to ensure that sub-award performance goals are achieved and the sub-award is used for authorized purposes, in compliance with state law, rules, and the terms and conditions of the sub-award. Monitoring of the sub-grantee must include:

(1) Reviewing financial and performance reports required by the local government.

(2) Following-up and ensuring that the sub-grantee takes timely and appropriate action on all deficiencies pertaining to the sub-award provided to the sub-grantee from the local government detected through audits, on-site reviews, and other means.

(3) Issuing a management decision for audit findings pertaining to the sub-award provided to the sub-grantee from the local government as required.

ACCEPTANCE OF RESTRICTIONS

Signature of this Agreement constitutes acceptance of all grant conditions, grant restrictions and the terms of all applicable laws.

This is to certify that the objectives of the Tarrant Regional Auto Crimes Task Force as stated in its Grant Application for the fiscal year(s) funding covered by this Agreement have been reviewed and that it is mutually agreed to cooperate to whatever extent is necessary in carrying out the work plan described in the application(s).

Additionally, each participating agency and entity is cognizant of the grant and agrees to abide by any and all rules or special conditions in relation to the application. Agencies or their representatives shall have the right to investigate, examine and audit at any time any and all necessary books, papers, documents, records and personnel that pertain to this contract or any related subcontracts.

EQUAL EMPLOYMENT OPPORTUNITY PROGRAM CERTIFICATION

The city law enforcement agency signing along with Tarrant County certifies that:

> Either the city law enforcement agency signing along with Tarrant County employs fifty (50) or more people and has received or applied to the Texas Motor Vehicle Crime Prevention Authority for total funds in excess of $25,000, in which case the city law enforcement agency signing along with Tarrant County certifies that it has formulated an equal employment opportunity program in accordance with 28 CFR 42.301 et seq., Subpart E and that it is on file in the office of:

_____
NAME

_____
TITLE

_____
STREET ADDRESS

_____
CITY, STATE

OR, if the above is left blank, the city law enforcement agency signing along with Tarrant County certifies that it is not required by the terms of this grant or the laws applicable thereto to have such a plan on file in order to participate in this grant.

The Tarrant County Judge certifies that:

> Tarrant County employs fifty (50) or more people and has received or applied to the Texas Motor Vehicle Crime Prevention Authority for total funds in excess of $25,000; therefore, Tarrant County has formulated an equal employment opportunity program in accordance with 28 CFR 42.301 et seq., Subpart E and that is on file in the office of:

ROXIE HELD
DIRECTOR OF HUMAN RESOURCES
100 East Weatherford Street
Fort Worth, Texas 76196.

Said plan or plans are on file and available for review or audit by an official of the Texas Motor Vehicle Crime Prevention Authority as required by relevant laws and regulations.

ENTIRE AGREEMENT

This Agreement supersedes any and all other agreements, either oral or in writing, between the parties hereto with respect to the subject matter hereof, and no other agreement, statement, or promise relating to the subject matter of this Agreement which is not contained herein shall be valid or binding upon all parties.

EXECUTION OF AGREEMENT

This Agreement may be executed in one or more counterparts, each of which will be deemed to be an original copy of this Agreement, and all of which, when taken together, shall be deemed to constitute one and the same agreement. The exchange of copies of this Agreement and of signature pages by electronic transmission shall constitute effective execution and delivery of this Agreement as to the parties and may be used in lieu of the original Agreement for all purposes. Signatures of the parties transmitted or executed electronically shall be deemed to be their original signatures for any purpose whatsoever.

[Remainder of Page Intentionally Left Blank]

SIGNED AND EXECUTED this _____ day of _____, 2025.

COUNTY OF TARRANT
STATE OF TEXAS

Tim O'Hare
County Judge

Bill E. Waybourn
Sheriff

Phil Sorrells
District Attorney

APPROVED AS TO FORM:

Criminal District Attorney's Office*

CERTIFICATION OF
AVAILABLE FUNDS IN THE
AMOUNT OF $ 112,039.00:

Tarrant County Auditor

*By law, the Criminal District Attorney's Office may only approve contracts for its clients. We reviewed this document as to form from our client's legal perspective. Other parties may not rely on this approval. Instead those parties should seek contract review from independent counsel.

Each entity acknowledges that it is a "governmental entity" and not a "business entity" as those terms are defined in Tex. Gov't Code § 2252.908, and therefore, no disclosure of interested parties pursuant to Tex. Gov't Code Section 2252.908 is required.

OTHER SIGNING ENTITY:

City of Bedford
NAME OF ENTITY

SIGNATURE OF AUTHORIZED OFFICIAL — DATE: 11/20/25

Chief of Police
TITLE

APPROVED AS TO FORM AND LEGALITY:

ATTORNEY FOR ABOVE-LISTED NON-COUNTY ENTITY — DATE: 11/20/25

Attest:

Amanda Jacobs

BUDGETARY SCHEDULE

Budgetary Schedule:

$ 100,610.00	Salary
$ 6,399.00	Fringe
$ 5,030.00	Taskforce Overtime
$ 112,039.00	Total Reimbursable Funds

$ 26,752.00 Cash Match Portion paid by City of Bedford

NONSUPPLANTING CERTIFICATION OF PARTICIPATING AGENCIES OTHER THAN GRANTEE

Texas Government Code 772.006(a)(7) requires that state funds provided by this Act shall not be used to supplant state or local funds. Public Law 98-473 requires that federal funds provided by that Act shall not be used to supplant state or local funds.

The city law enforcement agency certifies that Texas Motor Vehicle Crime Prevention Authority funds will not be used to replace state or local funds that would be available in the absence of Texas Motor Vehicle Crime Prevention Authority funds.

Bobby LaPenna
NAME

Chief of Police
TITLE

Bedford Police Department
(CITY OR LAW ENFORCEMENT ENTITY)

(Note: Tarrant County's certification is incorporated in each grantee's report of expenditure and status of funds.

UNIFORM ASSURANCES

NON-COUNTY ENTITY ASSURANCES CERTIFICATION

I certify that the programs proposed in this application meet all the requirements of the Texas Motor Vehicle Crime Prevention Authority Program, that all the information presented is correct, and that the applicant will comply with the rules of the Texas Motor Vehicle Crime Prevention Authority and all other applicable federal and state laws, regulations, and guidelines. By appropriate language incorporated in each grant, subgrant, or other document under which funds are to be disbursed, the undersigned shall assure that the following assurances apply to all recipients of assistance. We acknowledge reviewing the TxGMS Standard Assurances by Local Governments as promulgated by the Texas Comptroller of Public Accounts, available at https://comptroller.texas.gov/purchasing/grant-management/, and, as applicable, agree to abide by the terms stated therein.

Bobby LaPenna
NAME

Chief of Police
TITLE

Bedford Police Department
(CITY OR LAW ENFORCEMENT ENTITY)

Note – This Interlocal Assistance Agreement was last updated November 6, 2025

TARRANT COUNTY
COMMISSIONERS COURT COMMUNICATION

Court Date: December 9, 2025	**Court Order #:**	**Page:** 1 of 18
Department: Sheriff	**Prepared By:** Maria Gonzalez	**Approved By:** Emily Pedigo

SUBJECT:

Consideration of a Subscription Services Agreement with LeadsOnline, LLC for Access to and Usage of the LeadsOnline PowerPlus Investigations System

*****CONSENT AGENDA *****

COMMISSIONERS COURT ACTION REQUESTED

It is requested that the Commissioners Court consider a Subscription Services Agreement with LeadsOnline, LLC, a Delaware limited liability company (LeadsOnline), for access to and usage of the LeadsOnline PowerPlus Investigations System.

BACKGROUND

LeadsOnline is a cloud-based technology company that provides law enforcement agencies with access to data reported by pawn shops, secondhand dealers, recyclers, and other businesses involved in the sale or transfer of personal property. The platform enables agencies to search this information to identify stolen items and develop investigative leads.

The LeadsOnline Investigations System is the company's primary law enforcement tool, allowing officers to search for and analyze reported transactions, monitor activity across jurisdictions, and connect individuals to potential criminal activity. The system also includes access to ballistic analysis capabilities, including IBIS, through LeadsOnline's acquisition of Forensic Technology.

If approved, access to this system will support the Sheriff's Office in recovering stolen property, identifying suspects, and improving investigative efficiency through centralized, real-time data.

The District Attorney's Office has approved this agreement as to form.

FISCAL IMPACT

Expenses for the first (12) months will be $27,000.00. Funding is available in account 10000-2026 General Fund/2110410000 Sheriff's Office - Investigations/524153 Online Services.

PASSED AND APPROVED on December 9, 2025.

COUNTY OF TARRANT
STATE OF TEXAS

By: Separate Electronic Signature Page
Tim O'Hare
County Judge

APPROVED AS TO FORM:

_____
District Attorney's Office*

*By law, the District Attorney's Office may only approve contracts for its clients. We reviewed this document as to form from our client's legal perspective. Other parties may not rely on this approval. Instead, those parties should seek contract review from independent counsel.

Attachments

LEADSONLINE CONTRACT.pdf

LEADSONLINE

LEADSONLINE ORDER SUMMARY No. S-15291

AGENCY ID: 178 | ORDER TOTAL: $83,454.30

CUSTOMER:

TARRANT COUNTY, TEXAS

UNIT:

SHERIFF'S OFFICE

YEAR ONE *(Due Now)*

DUE DATE	SCOPE OF SERVICES	RATE	QTY	AMOUNT
11/01/2025	PowerPlus Investigations System	$27,000.00	1	$27,000.00
		Total:		**$27,000.00**

YEAR TWO

DUE DATE	SCOPE OF SERVICES	RATE	QTY	AMOUNT
11/01/2026	PowerPlus Investigations System	$27,810.00	1	$27,810.00
		Total:		**$27,810.00**

YEAR THREE

DUE DATE	SCOPE OF SERVICES	RATE	QTY	AMOUNT
11/01/2027	PowerPlus Investigations System	$28,644.30	1	$28,644.30
		Total:		**$28,644.30**

PAYMENT TERMS & TAXES

Unless otherwise specified on the Order Form(s), Customer must pay all fees within 30 days of each anniversary during the Initial Term and any subsequent Renewal Term. Eligible credits will be reviewed, assessed, and applied following the full execution of the Agreement and Order Form(s). Eligible credits will be reviewed, assessed, and applied following the full execution of the Agreement and Order Form(s).

FEES ARE EXCLUSIVE OF SALES, USE, WITHHOLDING, VAT, AND OTHER SIMILAR TAXES, AND IF REQUIRED BY LAW CUSTOMER IS RESPONSIBLE FOR PAYMENT OF SUCH TAXES. ANY TAXES REFERENCED AND/OR QUOTED ARE ESTIMATES ONLY, AND NOT ALL SERVICES AND/OR HARDWARE MAY BE SUBJECT TO TAXATION. FINAL TAX AMOUNTS WILL BE DETERMINED BASED ON APPLICABLE LAWS AT THE TIME OF INVOICING.

CUSTOMER SHOULD PROVIDE A TAX EXEMPTION CERTIFICATE, IF APPLICABLE.

© 2000-2025 LEADSONLINE LLC. ALL RIGHTS RESERVED. LEA/LEADS (v.2025.02)

LEADSONLINE

LEADSONLINE POWERPLUS INVESTIGATIONS SYSTEM SUBSCRIPTION

ORDER FORM NO. Q-06424 | AGENCY ID: 178

CUSTOMER:
TARRANT COUNTY, TEXAS

UNIT:
SHERIFF'S OFFICE

1. SERVICE

a. **Service.** LeadsOnline PowerPlus Investigations System Subscription for Law Enforcement Agency users (**Service**).

b. **Authority.** Customer represents that it is a law enforcement agency or governing body of a law enforcement agency, an entity duly authorized by municipal, state county or federal government to enforce laws or investigate crimes, and the Eligible Users are employed by Customer in the Unit listed at the top of this Order Form.

2. PURPOSE

a. **Law Enforcement Use.** Exclusively for the official law enforcement agency duties of Customer's Unit; information retrieved from the Service is for the exclusive use of Eligible Users with the exception of disclosure necessary to investigate and prosecute crimes within the jurisdiction of and investigated by Customer's Unit.

3. DEFINITIONS

a. **Audit Records** means records audit records retained for administrative, legal, audit, or other operational purposes. Audit Records are protected from modification, deletion and unauthorized access and are retained for a minimum of one (1) year.

b. **Deconfliction Data** means the subset of data provided to be made aware of activity by another Law Enforcement Official or Law Enforcement Customer regarding a matching person, person of interest, phone number, device identifier, item of property, location, vehicle or other data element to facilitate the benefits of coordinated investigative efforts by Law Enforcement Officials.

c. **Law Enforcement Official** means a person employed by and authorized by a Law Enforcement Customer to, in their official duties, access or submit data according to the terms of this agreement.

d. **Reporting Business** means any entity that records Transaction Data regarding the receipt or other disposition of merchandise or materials and reports such Transaction Data for access by Law Enforcement Officials according to official request, statutory requirement or otherwise.

e. **Repository Data** means data and any other information LeadsOnline has received from entities other than the Customer.

f. **Transaction Data** means information provided by Reporting Businesses and Law Enforcement Agencies about transactions, including, but not limited to, the transaction number, make, model, property description, serial number, name, address, identification number, telephone number, date of birth and any images recorded during the course of a transaction according to official request, statutory requirement or otherwise.

g. **Analysis Files** means records electronically submitted by a Customer to the Service for automated analysis. Analysis Files include but are not limited to unstructured images, video, audio or text submitted, and data related to communications or movements of devices, vehicles and other entities, which reference data for identifying locations including cell site lists, landmarks, and locations related to crimes. Analysis Files are Customer Property.

4. SERVICE RECIPIENT AND ELIGIBLE USERS

a. **Service Recipient.** An unlimited number of authorized personnel of Customer in its Sheriff's Office, each with a unique login (**Eligible Users**).

   i. Eligible User logins may not be shared and individuals who are not Eligible Users may not access the Service.

   ii. During initial onboarding, Customer may provide LeadsOnline with the names and email addresses of Eligible Users.

5. TERM, SERVICE PERIODS AND SUBSCRIPTION FEES

© 2000-2025 LEADSONLINE LLC. ALL RIGHTS RESERVED. LEA/LEADS (v 2025.02)

a. **Order Term.** This Order Form will become effective as of the Effective Date and remain in effect through the Service Periods listed below (**Initial Term**) and any renewal Service Periods or until termination by LeadsOnline or Customer as described below. The Effective Date shall be defined as the date of the last signature below.

b. **Payment Terms.** Payment shall be made on or before each anniversary during the Initial Term and any renewal term thereafter.

START DATE	END DATE	RATE	QTY	TOTAL DUE
November 1, 2025	October 31, 2026	$27,000.00	1	**$27,000.00**
November 1, 2026	October 31, 2027	$27,810.00	1	**$27,810.00**
November 1, 2027	October 31, 2028	$28,644.30	1	**$28,644.30**

c. **Renewals.** Neither party is obligated to renew this Order Form. Prior to the expiration of the Initial Term or any renewal term, the parties may renew this Order Form for additional one-year terms by LeadsOnline's submission of a valid invoice to Customer for the renewal Service Period at then-current pricing and Customer's payment of such invoice within thirty (30) days of renewal.

d. **Applicable Taxes.** Fees are exclusive of sales, use, withholding, VAT, and other similar taxes, and if required by law Customer is responsible for payment of such taxes. Any taxes referenced and/or quoted are estimates only, and not all services may be subject to taxation. Final tax amounts will be determined based on applicable laws at the time of invoicing. Customer may provide a Tax Exemption Certificate if applicable.

6. FEATURES

CAPABILITY	POWERPLUS KEY FEATURES AND CHARACTERISTICS
PowerPlus Nationwide Search	- Nationwide search access through pawn shop, secondhand and scrap metal recycler transactions. Unlimited accounts/searches for your personnel working your cases. Continuous saved searches alert investigators to persons or property after. Results include images of property, sellers, vehicles, thumbprints, etc. as reported. Robust identity resolution to spot suspect activity when identifiers are incorrect or out of date. Possible associates report identifying other leads in cases. Advanced property identification to overcome incomplete descriptions and missing information. Daily Stats (hits and statistics for each user).
Nationwide Inter-Agency Deconfliction System	Benefit from coordinated investigative efforts through pointers to the records of other Law Enforcement Agencies when users match persons, property, devices, vehicles, and other entities.
Phone Forensic Extraction Search	Upload files from device extraction tools (i.e., Cellebrite, XRY, Oxygen) to find and identify activity of suspects.
NCIC Stolen Property Notification	Automated alerts on property including guns, articles and vehicles from your cases found within and outside of your jurisdiction.
Person / Property Notification	Automatic alerts on suspects, wanted persons and stolen property from your agency's lists.
Compliance Management	Free online reporting system for all pawn/secondhand stores. Easy reporting for businesses. Compatible with point-of-sale systems. Property hold management system. Message Inbox for alerts and communication to and from businesses in your jurisdiction. Unlimited technical support for reporting businesses.
OfferUp & eBay Marketplace Access	Identify persons in your cases when evidence is found in online listings.
Unlimited Support	Updates, training and support for Customer personnel and businesses.
CompStat Mapping System	Visualize suspect activity within and outside your jurisdiction.

© 2000-2025 LEADSONLINE LLC. ALL RIGHTS RESERVED. LEA/LEADS (v.2025.02)

LeadsOnline Toolbox	Automated search warrant generation, automated phone lookups, repository of training materials, video tutorials, templates, resources, software, process guides, carrier and network specifications, contacts, subject matter assistance and other content relevant to criminal investigations.
Citizen Property Inventory System	Community engagement for improved reporting of property crimes via LeadsOnline ReportIt.

7. ONBOARDING, TRAINING AND TECHNICAL SUPPORT

a. **Registration.** Eligible Users register for a user account at www.leadsonline.com; Customer may provide lists of Eligible Users for expedited processing.

b. **Training.** LeadsOnline Support will activate Eligible Users and provide training via in-app instructions, videos, and live support.

c. **Support.** Technical support services for non-critical issues, training and general assistance are provided to end-users in the form of unlimited email and/or telephone support, Monday through Friday 7:00 AM – 5:30 PM CST via toll-free at (800) 311-2656 or support@leadsonline.com.

8. MISCELLANEOUS

a. This Order Form is attached to and incorporated into the Subscription Services Agreement between **Customer** and **LeadsOnline** dated (**Agreement**). This Order Form is governed by the terms of the Agreement between the parties. All terms not defined in this Order Form have the meanings ascribed to such terms in the Agreement. This Order Form and the Agreement constitute the entire agreement between the parties, and supersede all prior or contemporaneous negotiations, agreements, and representations, whether oral or written, related to this subject matter. No modification or waiver of any term of this Order Form is effective unless both parties sign an amendment to this Order Form. LeadsOnline may include a purchase order number on Customer's invoice solely for Customer's internal payment and record keeping processes, but any terms within any purchase order in response to a quote, order form or invoice will not modify or enlarge the obligations or liabilities of either party even if the parties sign it.

9. SIGNATURES

a. Each representative identified below represents and warrants that it has the full power, right and authority to enter into this Agreement on behalf of its respective party.

LEADSONLINE, LLC (LEADSONLINE)
Signature:
Printed Name: Alexander Finley
Title: CEO
Date:
Address: 6900 Dallas Parkway, Suite 825, Plano, Texas 75024-4200

TARRANT COUNTY, TEXAS (CUSTOMER)
Signature: Bill E Waybourn
Printed Name: Bill E. Waybourn
Title: Sheriff
Date: 11-6-2025
Address: 200 Taylor Street, Fort Worth, Texas 76102, United States

TARRANT COUNTY, TEXAS (CUSTOMER)
Signature:
Printed Name:
Title:
Date:
Address: 200 Taylor Street, Fort Worth, Texas 76102, United States

© 2000-2025 LEADSONLINE LLC. ALL RIGHTS RESERVED | FA/LEADS (v 2025.02)

APPROVED AS TO FORM:

Katherine E. Owens November 5, 2025
Criminal District Attorney's Office*

*By law, the Criminal District Attorney's Office may only approve contracts for its clients. We reviewed this document as to form from our client's legal perspective. Other parties may not reply on this approval. Instead, those parties should seek contract review from independent counsel.

LEADSONLINE

SUBSCRIPTION SERVICES AGREEMENT

This Subscription Services Agreement (**Agreement**) is between LeadsOnline, LLC, a Delaware limited liability company (**LeadsOnline**), Tarrant County, Texas (**Customer**), and is effective as of the date of the last signature below. This Agreement contemplates one or more Order Forms for Services, which are governed by the terms of this Agreement.

1. SERVICE

a. This Agreement and the applicable Order Form provide Customer access to and usage of solution services involving hardware devices provided by LeadsOnline with accompanying software needed to operate such hardware and/or an Internet-based software service, including, without limitation, its features, functions, and user interface, and underlying software, which may be limited to a set number of Eligible Users, as defined and specified on an Order Form (**Service**).

2. USE OF SERVICE

a. **Customer Owned Data.** All data, information, images, and files uploaded or otherwise entered by Customer into the Service remains the property of Customer, as between LeadsOnline and Customer (**Customer Property**), unless otherwise specified in the applicable Order Form regarding licensing terms for the Service offered under said Order Form.

b. **Responsibilities for Customer Property.** Customer represents and warrants to LeadsOnline that Customer has provided all required notices and has obtained all required licenses, permissions, and consents regarding Customer Property for use within the Service under this Agreement. Customer grants LeadsOnline the right to use the Customer Property solely for Purposes of performing under this Agreement (which includes, without limitation, the right for LeadsOnline to enhance its technology and offerings). LeadsOnline will purge any or all Customer Property upon Customer's written request. Customer may export its Customer Property as allowed by functionality within the Service.

c. **General Responsibilities.** Customer must (i) ensure that access to Service and information produced by or derived from it is limited to the Purpose defined in the Order Form, (ii) maintain any data accessed, received or otherwise derived from Service according to all applicable statutes, laws and regulations for use and disclosure of non-public personal information, (iii) connect to Service only using devices and browsers with proper encryption, (iv) promptly notify LeadsOnline (within the Service or by email to support@leadsonline.com) when an Eligible User is no longer employed by Customer or is no longer authorized to access Service, (v) ensure that each Eligible User is acting within the bounds of their authority from Customer and within their legal rights to search, possess, enter, analyze and use, all information and data submitted to and received from the Service, (vi) refrain from any use, misuse or actions related to Service or Data that infringe, misappropriate, or otherwise violate any right of anyone, or that violate any applicable law, and ensure that any instructions or directives Customer gives to or regarding anyone do not conflict with applicable laws, (vii) use any hardware provided by LeadsOnline solely for the Purpose defined in the Order Form and in accordance with all applicable instructions, policies, and documentation provided by LeadsOnline, (viii) ensure that the hardware is used only by Eligible Users authorized under this Agreement and is not transferred, loaned, or sublicensed to any unauthorized person or entity, (ix) keep all hardware provided as part of the Service in good working condition, refrain from any unauthorized repairs, modifications, or tampering, and promptly notify LeadsOnline of any malfunction, damage, or loss, and (x) verify the accuracy, timeliness, context and relevance of information or communication from Service or personnel prior to taking action. Customer acknowledges that LeadsOnline does not enforce laws, does not provide legal advice, and does not claim to have authority or expertise in legal or law enforcement matters.

d. **Governmental Agency Public Records Clause.** If Customer is a government agency and is required by law to permit the inspection and copying of public records, Customer acknowledges the Service contains information protected by exemptions to public disclosure laws in many states, and if Customer searches the Service in response to a request for Public Records, Customer is acting on its own accord. LeadsOnline does not grant Customer access to the Service for the Purpose of searching for or creating records to respond to a public records request when Customer did not have the record in its possession at the time of the request.

e. **Customer Responsibilities.** Customer: (i) must keep its passwords secure and confidential and use industry-standard password management practices, and ensure that any credentials related to the hardware under the Service are protected from unauthorized access; (ii) is responsible for its access control policies and administration of access rights to its account within the Service, the acts and omissions of its users, and the legality and accuracy of any data submitted to the Service, may not share any access credentials and must also prevent unauthorized access, tampering, or misuse of any hardware provided under the Service; (iii) must use commercially reasonable efforts to prevent unauthorized access to its account, and notify LeadsOnline promptly of any such unauthorized access; (iv) may use the Service and any associated hardware only in accordance with the Service's technical documentation (including without limitation, video tutorials) and applicable law; and (v) must follow all provided guidelines for hardware

© 2000-2025 LEADSONLINE LLC. ALL RIGHTS RESERVED. LEA/LEADS (v 2025.02)

setup, maintenance, and operation to ensure compliance and functionality under the Service.

f. **LeadsOnline Support.** Unless otherwise specified in the applicable Order Form, LeadsOnline must provide Customer support for the Service under the terms of LeadsOnline's Customer Support Policy (**Support**), which is located at leadsonline.com/customer-support.

3. Warranty Disclaimer

a. **THE SERVICE IS PROVIDED 'AS IS' WITHOUT WARRANTY. LEADSONLINE DISCLAIMS ALL WARRANTIES, INCLUDING, WITHOUT LIMITATION, THE IMPLIED WARRANTIES OF MERCHANTABILITY, TITLE, AND FITNESS FOR A PARTICULAR PURPOSE. WHILE LEADSONLINE TAKES REASONABLE PHYSICAL, TECHNICAL, AND ADMINISTRATIVE MEASURES TO SECURE THE SERVICE, CUSTOMER UNDERSTANDS THAT THE SERVICE MAY NOT BE ERROR FREE, AND USE MAY BE INTERRUPTED.**

b. While Customer acknowledges that the Service may not be error-free and may not fully meet Customer's expectations, LeadsOnline does warrant that the Service is free from defects that will substantially affect performance, and that it has used commercially available tools designed to discern that no viruses or other security defects are present. LeadsOnline further warrants that the Service will function substantially in accordance with the Order Form. LeadsOnline will not intentionally introduce any virus, Trojan horse, spyware, malware, or other malicious code designed to erase, damage, or unlawfully interfere with Customer's equipment, data, or other programs. Notwithstanding the foregoing, Customer acknowledges and agrees that the Service may contain functionality that allows LeadsOnline to remotely disable or limit the hardware's operation in accordance with this Agreement, including but not limited to instances of non-payment or material breach by Customer.

c. LeadsOnline cannot control the decisions and actions of Customer. LeadsOnline expressly disclaims and does not undertake or assume any duty, obligation or responsibility for any decisions, actions, reactions, responses, inaction by Customer or any other party as a result of or reliance on, in whole or in part, any use of the Service or information derived from it, or for any consequences or outcomes including death, injury, loss or damage to any property arising from or caused by any such actions decisions, reactions, responses, or inaction.

4. Payment

a. **Fees and Payment.** Customer must pay all fees as specified on the Order Form, but if not specified, then within 30 days of receipt of an invoice. The fees are exclusive of applicable sales, use, withholding, VAT, and other similar taxes, and if required by law Customer is responsible for payment of such taxes.

b. **Nonpayment.** LeadsOnline will provide electronic notice (within the Service) and notice to the email registered with LeadsOnline (Customer is responsible for maintaining an updated email address with LeadsOnline) of the non-payment of an open invoice. If the payment is not made within 7 days of the first notice, then LeadsOnline may suspend Service and Support until the amount is paid in full or terminate the Service upon 30 days' notice under Section 9(c).

5. Mutual Confidentiality

a. **Definition of Confidential Information.** Confidential Information means all non-public information disclosed by a party (**Discloser**) to the other party (**Recipient**), whether orally, visually, or in writing, that is designated as confidential or that reasonably should be understood to be confidential given the nature of the information and the circumstances of disclosure (**Confidential Information**). LeadsOnline's Confidential Information includes, without limitation, the Service. Customer's Confidential Information includes, without limitation, the Customer Property.

b. **Protection of Confidential Information.** Subject to the requirements of the limitations stated in Section 5(d) below, Recipient must use the same degree of care that it uses to protect the confidentiality of its own confidential information of like kind (but not less than reasonable care) to: (i) not use any Confidential Information of Discloser for any Purpose outside the scope of this Agreement; and (ii) limit access to Confidential Information of Discloser to those of its and its Affiliates' employees and contractors who need that access for Purposes consistent with this Agreement, and who have a legal obligation under law or policy regarding confidentiality or have signed confidentiality Agreements with Recipient containing protections not materially less protective of the Confidential Information than those in this Agreement.

c. **Exclusions.** Confidential Information *excludes* information that: (i) is or becomes generally known to the public without breach of any obligation owed to Discloser; (ii) was known to the Recipient before its disclosure by the Discloser without breach of any obligation owed to the Discloser; (iii) is received from a third party without breach of any obligation owed to Discloser; or (iv) is independently developed by the Recipient without use of or access to the Confidential Information. The Recipient may disclose Confidential Information to the extent required by law or court order but will provide Discloser with advance notice to seek a protective order unless

© 2000-2025 LEADSONLINE LLC. ALL RIGHTS RESERVED. LEA/LEADS (v 2025.02)

otherwise directed by the court.

d. **Texas Public Information Act.** Customer advises LeadsOnline that Customer is a governmental body under Chapter 552 of the Texas Government Code and that certain information that is collected, assembled, or maintained in connection with the transaction of official business by a governmental body is considered public information potentially subject to disclosure pursuant to a valid Texas Public Information Act ("TPIA") request. LeadsOnline's trade secrets, certain financial information, and proprietary information may be subject to an exception to disclosure under Chapter 552 of the Texas Government Code, Subchapter C. If a TPIA request is made on Customer to disclose LeadsOnline information that may be subject to an exception from disclosure, Customer will (i) promptly notify LeadsOnline of such request for disclosure, and (ii) decline to release such information and file a written request with the Texas Attorney General's office seeking a determination as to whether such information may be withheld.

6. Information Security

a. **Data Security Measures.** To protect Customer Property from unauthorized disclosure, alteration, or misuse, LeadsOnline shall:

i. Agree to the terms of the Federal Bureau of Investigation Criminal Justice Information Services (FBI CJIS) Security Addendum.

ii. Ensure that LeadsOnline personnel with unescorted access to unencrypted Customer Property and/or physically secure locations have:
- Completed CJIS Security Awareness Training and have passed the Level Four CJIS Security Test designed for Information technology personnel (system administrators, security administrators, network administrator).
- Submitted to and successfully passed state of residency and national fingerprint-based record checks.

iii. Apply appropriate controls according to the AICPA Trust Services Criteria for Security so as to maintain a secure environment for all Customer Property.

iv. Maintain proper encryption of data in transit using 256-Bit Transport Layer Security (TLS) and at rest using FIPS 140-2 standards.

v. Maintain advanced firewall and intrusion protection, database partitioning, patch management, account management, identification and authentication, configuration management and third-party application and network penetration tests.

vi. Log events relative to access and use of the Services; maintain and protect logs from disclosure, alteration, or misuse.

vii. Respond to security incidents; In the event of a data breach (as defined by applicable law), of Customer Property, LeadsOnline will act to eliminate the breach, preserve forensic evidence, and notify Customer without undue delay. LeadsOnline shall have no obligation to notify consumers or regulatory authorities of a breach of Customer data that was not the result of a data security incident experienced by LeadsOnline.

viii. Purge any Customer Property upon Customer's written request.

7. Insurance

a. **Insurance Policies.** LeadsOnline shall maintain insurance policies for property, general liability, auto, workers compensation, errors and omissions/cyber liability insurance.

b. **Additional Insured**. For the purposes of this Agreement, Customer, its officers, officials, employees, and volunteers shall be deemed additional insureds on the general liability policy with respect to liability arising out of work or operations performed by or on behalf of LeadsOnline. Additional insured coverage shall be evidenced in the form of Blanket Certificate of Endorsement upon Customer's request.

8. Property

a. **Reservation of Rights.** LeadsOnline and its licensors are the sole owners of the Service, including all associated intellectual property rights, and they remain only with LeadsOnline. Title to any hardware provided under this Agreement passes to Customer upon full payment as specified in the Order Form; however, LeadsOnline retains all intellectual property rights related to any software, firmware, or proprietary technology embedded in or used to operate the hardware. Customer may not remove or modify any proprietary marking or restrictive legends in the Service. LeadsOnline reserves all rights that are not expressly granted in this Agreement.

b. **Restrictions.** Customer *may not*: (i) share, provide, sell, resell, rent, or lease the Service or use it in a service-provider capacity or allow access to the Service, its output, or any associated hardware, software, firmware, or proprietary technology by a third party, except as expressly permitted in this Agreement; (ii) use the Service or any hardware provided as part of the Service, to store or transmit unsolicited marketing emails, libelous, or otherwise objectionable, unlawful, or tortious material, or to store or transmit

© 2000-2025 LEADSONLINE LLC. ALL RIGHTS RESERVED. LEA/LEADS (v 2025.02)

infringing material in violation of third party rights; (iii) interfere with or disrupt the integrity or performance of the Service, including but not limited to tampering with, modifying, or attempting to bypass any security, tracking, or management features within any software or hardware provided as part of the Service; (iv) attempt to gain unauthorized access to the Service or its related systems or networks or use any automated means to monitor, access or copy any data from the Service; (v) reverse engineer, decompile, disassemble, or otherwise attempt to discover the underlying technology, software, or firmware of the Service or hardware, or modify, alter, or remove any proprietary markings or security features; (vi) resell, transfer, or dispose of the hardware in a manner inconsistent with this Agreement, including attempting to sublicense or lease it to a third party without LeadsOnline's prior written consent; the Service; or (vii) access the Service to build a competitive service or product, or copy any feature, function, or graphic. LeadsOnline may suspend Service to Customer if LeadsOnline believes in good faith that Customer's use of the Service poses threat to the security, availability, or legality of the Service; in such event, LeadsOnline will work with Customer to address the issue and restore Service as quickly as possible.

c. **Audit Information.** LeadsOnline logs events related to user registration, contacts, access, and use of the Services for legal, audit, security, and support Purposes (**Audit Information**). Audit Information is not Customer Property.

9. Term & Termination

a. **Term.** This Agreement continues for a period of one (1) year ("Initial Term"). Thereafter, the Customer may renew the Agreement for up to two (2) additional one-year terms by providing LeadsOnline with written notice (email notice will be acceptable) of renewal no less than thirty (30) days prior to the expiration of the then-current term (any such renewal, a "Renewal Term" and together with the Initial Term, the "Term").

b. **Term of Order Forms.** The term of each Order Form is specified in the Order Form.

c. **Mutual Termination for Material Breach.** If either party is in material breach of this Agreement, the other party may terminate this Agreement at the end of a written 30-day (30) notice/cure period if the breach has not been cured.

d. **Termination by Mutual Consent.** This Agreement and/or any Order Form may be terminated by the mutual consent of both parties.

e. **Termination of an Order Form Due to Non-Appropriation of Funds.** Government Customers may terminate services in an Order Form by providing sixty (60) days' written notice to LeadsOnline prior to the next contract year if funding to make the next scheduled payment is not duly appropriated and authorized.

f. **Return of Customer Property:**
   - Within sixty (60) days after termination, upon written or electronic request LeadsOnline will make the Service available for Customer to export Customer Property as provided in **Section 2(a)**.
   - After such a sixty-day (60) period, LeadsOnline has no obligation to maintain the Customer Property and may destroy it.

10. Liability Limit

a. **Indemnification for Third-Party Claims.** LeadsOnline will defend or settle any third-party claim against Customer to the extent that such claim alleges that the LeadsOnline technology used to provide the Service violates a copyright, patent, or trademark (**IP Indemnity Claim**), if Customer: promptly notifies LeadsOnline of the claim in writing; cooperates with LeadsOnline in the defense; and allows LeadsOnline to solely control the defense or settlement of the claim. Costs. LeadsOnline will pay infringement claim defense costs it incurs in defending Customer, and LeadsOnline-negotiated settlement amounts, and court awarded damages. Process. If such a claim appears likely, then LeadsOnline may modify the Service, procure the necessary rights, or replace it with the functional equivalent. If LeadsOnline determines that none of these are reasonably available, then LeadsOnline may terminate the Service and refund any prepaid and unused fees. Exclusions. LeadsOnline has no obligation for any claim arising from: Customer's misuse of the Services, LeadsOnline's compliance with Customer's designs, specification, instructions, or technical information; a combination of the Service with other technology or aspects where the infringement would not occur but for the combination; Customer's directives, access or use of, or laws or policies applicable to Customer regarding the information and sources thereof accessible via the Services including Customer Property; or technology or aspects not provided by LeadsOnline. **THIS SECTION CONTAINS CUSTOMER'S EXCLUSIVE REMEDIES AND LEADSONLINE'S SOLE LIABILITY FOR INTELLECTUAL PROPERTY INFRINGEMENT CLAIMS.**

b. **EXCLUSION OF INDIRECT DAMAGES. TO THE MAXIMUM EXTENT ALLOWED BY LAW, LEADSONLINE IS NOT LIABLE FOR ANY INDIRECT, SPECIAL, INCIDENTAL, OR CONSEQUENTIAL DAMAGES ARISING OUT OF OR RELATED TO THIS AGREEMENT (INCLUDING, WITHOUT LIMITATION, COSTS OF DELAY; LOSS OF OR UNAUTHORIZED ACCESS TO DATA OR INFORMATION; AND LOST PROFITS, REVENUE, OR ANTICIPATED COST SAVINGS), EVEN IF IT KNOWS OF THE POSSIBILITY OR FORESEEABILITY OF SUCH DAMAGE OR LOSS.**

c. **TOTAL LIMIT ON LIABILITY. TO THE MAXIMUM EXTENT ALLOWED BY LAW, EXCEPT FOR LEADSONLINE'S INDEMNITY**

© 2000-2025 LEADSONLINE LLC. ALL RIGHTS RESERVED. LEAD LEADS (v 2025.02)

OBLIGATIONS RELATING TO IP INDEMNITY CLAIMS, LEADSONLINE'S TOTAL LIABILITY ARISING OUT OF OR RELATED TO THIS AGREEMENT (WHETHER IN CONTRACT, TORT, OR OTHERWISE) DOES NOT EXCEED $100,000.00 PER OCCURRENCE AND $300,000.00 IN THE AGGREGATE.

11. Governing Law & Forum

a. **Government Customers.** This Agreement is governed by the laws of the State of Texas (without regard to conflicts of law principles) for any dispute between the parties or relating in any way to the subject matter of this Agreement. Any suit or legal proceeding must be exclusively brought in the federal or state courts for Tarrant County, Texas, and each party submits to this personal jurisdiction and venue. Nothing in this Agreement prevents either party from seeking injunctive relief in a court of competent jurisdiction.

b. **All other Customers.** For all other Customers, this agreement is governed by the laws of the State of Texas (without regard to conflicts of law principles) for any dispute between the parties or relating in any way to the subject matter of this agreement. Any suit or legal proceeding must be exclusively brought in the federal or state courts for Tarrant County, Texas and Customer submits to this personal jurisdiction and venue. Nothing in this agreement prevents either party from seeking injunctive relief in a court of competent jurisdiction. The prevailing party in any litigation is entitled to recover its attorneys' fees and costs from the other party.

12. Other Terms

a. **Entire Agreement and Changes.** This Agreement and the Order Form constitute the entire Agreement between the parties and supersede any prior or contemporaneous negotiations or Agreements, whether oral or written, related to this subject matter. Customer is not relying on any representation concerning this subject matter, oral or written, not included in this Agreement. No representation, promise, or inducement not included in this Agreement is binding. No modification or waiver of any term of this Agreement is effective unless both parties sign an amendment to this Agreement.

b. **No Assignment.** Neither party may assign or transfer this Agreement to a third party, except that the Agreement and all Order Forms may be assigned without the consent of the other party as part of a merger or sale of all or substantially all a party's businesses, assets, not involving a competitor of the other party, or at any time to an Affiliate.

c. **Export Compliance.** The Service and Confidential Information may be subject to export laws and regulations of the United States and other jurisdictions. Each party represents that it is not named on any U.S. government denied-party list. Neither party will permit its personnel or representatives to access any Service in a U.S.-embargoed country or in violation of any applicable export law or regulation.

d. **Independent Contractors.** The parties are independent contractors with respect to each other, and neither party is an employee, or partner of the other party or the other party's Affiliates.

e. **Enforceability and Force Majeure.** If any term of this Agreement is invalid or unenforceable, the other terms remain in effect. Neither party is liable for its non-performance due to events beyond its reasonable control, including but not limited to natural weather events and disasters, labor disruptions, and disruptions in the supply of utilities.

f. **Money Damages Insufficient.** Any breach by a party of this Agreement or violation of the other party's intellectual property rights could cause irreparable injury or harm to the other party. The other party may seek a court order to stop any breach or avoid any future breach of this Agreement.

g. **No Additional Terms.** LeadsOnline rejects additional or conflicting terms of any Customer form-purchasing document.

h. **Order of Precedence.** If there is an inconsistency between this Agreement and an Order Form, the Order Form prevails.

i. **Survival of Terms.** All provisions of this Agreement regarding payment, confidentiality, indemnification, limitations of liability, proprietary rights, and such other provisions that by fair implication require performance beyond the term of this Agreement shall survive expiration or termination of this Agreement until fully performed or otherwise are inapplicable.

j. **Feedback.** If Customer provides feedback or suggestions about the Service, then LeadsOnline (and those it allows to use its technology) may use such information without obligation to Customer.

k. **Boycott of Israel Prohibited.** In compliance with Section 2271.001 et seq. of the Texas Government Code, LeadsOnline verifies that neither it nor any of its affiliates currently boycott Israel and neither it nor any of its affiliates will boycott Israel during the term of this Agreement. "Boycott Israel" is defined in Section 808.001(1) of the Texas Government Code.

l. **Scrutinized Business Operations Prohibited.** In compliance with Section 2252.151 et seq. of the Texas Government Code, LeadsOnline warrants and represents that: (1) neither LeadsOnline nor any of its affiliates engages in scrutinized business operations in Sudan; (2) neither PROVIDER nor any of its affiliates engages in scrutinized business operations in Iran; and (3) neither LeadsOnline nor any of its affiliates engages in scrutinized business operations with designated foreign terrorist organizations.

© 2000-2025 LEADSONLINE LLC. ALL RIGHTS RESERVED. LEA/LEADS (v.2025.02)

"Scrutinized business operations in Sudan" is defined in Section 2270.0052 of the Texas Government Code. "Scrutinized business operations in Iran" is defined in Section 2270.0102 of the Texas Government Code. "Scrutinized business operations with designated foreign terrorist organizations" is defined in Section 2270.0152 of the Texas Government Code. PROVIDER further represents and warrants that neither LeadsOnline nor any of its affiliates appears on any of the Texas Comptroller's Scrutinized Companies Lists.

m. **Discrimination Against Firearm Entities or Firearm Trade Associations Prohibited.** In compliance with Section 2274.002 of the Texas Government Code, LeadsOnline verifies that neither it nor any of its affiliates have a practice, policy, guidance, or directive that discriminates against a firearm entity or firearm trade association; and neither it nor any of its affiliates will discriminate during the term of the Agreement against a firearm entity or firearm trade association. "Discriminate against a firearm entity or firearm trade association" is defined in Section 2274.001(3).

n. **Boycott of Certain Energy Companies Prohibited**. In compliance with Section 2276.002 of the Texas Government Code, LeadsOnline verifies that neither it nor any of its affiliates currently boycott energy companies and neither it nor any of its affiliates will boycott energy companies during the term of this Agreement. "Boycott energy company" is defined in Section 809.001(1) of the Texas Government Code.

o. **Form 1295.** LeadsOnline acknowledges and agrees that it has fully, accurately, and completely disclosed all interested parties in the Form 1295 electronically filed with the Texas Ethics Commission, at https://www.ethics.state.tx.us/filinginfo/1295/, as required by law, and that the attached signed copy attached is a full and true copy of said filed form.

p. **Compliance with Laws.** In providing the services required by this Agreement, LeadsOnline must observe and comply with all applicable federal, state, and local statutes, ordinances, rules, and regulations, including, without limitation, workers' compensation laws, minimum and maximum salary and wage statutes and regulations, and non-discrimination laws and regulations. LeadsOnline shall be responsible for ensuring its compliance with any laws and regulations applicable to its business, including maintaining any necessary licenses and permits.

q. **Execution of Agreement.** This Agreement may be executed in one or more counterparts, each of which will be deemed to be an original copy of this Agreement, and all of which, when taken together, shall be deemed to constitute one and the same agreement. The exchange of copies of this Agreement and of signature pages by electronic transmission shall constitute effective execution and delivery of this Agreement as to the parties and may be used in lieu of the original Agreement for all purposes. Signatures of the parties transmitted or executed electronically shall be deemed to be their original signatures for any purpose whatsoever.

13. SIGNATURES

a. Each representative identified below represents and warrants that it has the full power, right and authority to enter into this Agreement on behalf of its respective party.

LEADSONLINE, LLC (LEADSONLINE)
Signature:
Printed Name: Alexander Finley
Title: CEO
Date:
Address: 6900 Dallas Parkway, Suite 825, Plano, TX 75024, United States

TARRANT COUNTY SHERIFF'S OFFICE (CUSTOMER)
Signature: Bill E. Waybourn
Printed Name: Bill E. Waybourn
Title: Sheriff
Date:
Address: 200 Taylor Street, Fort Worth, Texas 76102, United States

TARRANT COUNTY SHERIFF'S OFFICE (CUSTOMER)
Signature:
Printed Name:
Title:
Date:

© 2000-2025 LEADSONLINE LLC. ALL RIGHTS RESERVED. LEA/LEADS (v.2025.02)

Address: 200 Taylor Street, Fort Worth, Texas 76102, United States

© 2000-2025 LEADSONLINE LLC. ALL RIGHTS RESERVED. LEA/LEADS (v 2025.02)

TARRANT COUNTY
COMMISSIONERS COURT COMMUNICATION

Department: Tax Assessor-Collector **Prepared By:** Charlotte Sadler **Approved By:** Andy Nguyen

SUBJECT:

Consideration of Tax Office Deputizations

***** CONSENT AGENDA *****

COMMISSIONERS COURT ACTION REQUESTED

It is requested that the Commissioners Court consider the attached Tax Office Deputizations.

BACKGROUND

The Tax Assessor-Collector or his representative administered these deputizations listed on the attachment as prescribed by Texas Traffic Laws, Sec. 502.112., 502.113 and 502.114. Some of the deputies are authorized to issue motor vehicle registration receipts and prepare or accept applications for title transfers. Some deputies are also authorized to process property tax transactions involving values, rates and receivables. These deputizations do not allow the deputies to perform any other act on behalf of the Tarrant County Tax Assessor-Collector. The attached list reflects those individuals who have been given these deputizations.

FISCAL IMPACT

There is no fiscal impact associated with this item.

Attachments

Tax Deputizations October 2025.pdf

Tax Office Deputizations October 25 2025		
Name	Date	Entity
Jordan Firman	October 2 2025	Sproud Automotive LL C dba Carvana CDJR Fiat6 of Park Cities
LaChandra R. Hallman	October 13 2025	Tarrant County Tax Office Employee
Tatiana Padilla	October 13 2025	Tarrant County Tax Office Employee

TARRANT COUNTY
COMMISSIONERS COURT COMMUNICATION

Department: Transportation **Prepared By:** Sarah VanTassel **Approved By:** Joseph Jackson

SUBJECT:

Consideration to Enter into an Advanced Funding Agreement with the Texas Department of Transportation for the Reconstruction of US 81 County Line to Avondale Haslet

*****CONSENT AGENDA *****

COMMISSIONERS COURT ACTION REQUESTED

It is requested that the Commissioners Court consider entering into an Advanced Funding Agreement (AFA) with the Texas Department of Transportation (TxDOT) for the Reconstruction of US 81 County Line to Avondale Haslet.

BACKGROUND

On October 14, 2025, the Commissioner Court, through Court Order #146143, approved a Donation Agreement between Tarrant County and 170 North Star Development, Inc. Related to the improvements to the Northstar Parkway Interchange at US 81-287 by donating the design plans, specifications and estimates for TxDOT to use in the construction phase.

The County has identified a highway improvement project described as the reconstruction of mainlanes and northbournd frontage road with construction of concrete entrance ramp and auxillary lane on US 81 from County Line to Avondale Haslet Road. The project improvements will also include reconstruction os US 81/287 main lanes, reconstruction of a portion of northbound frontage road, constructions of an entrance ramp from southbound frontage road and acceleration lane, construction of cross culvert and approximately 550 linear feet of retaining wall. Tarrant County has requested to participate in said improvement by providing the schematic design, plans, specifications and estimates.

Because TxDOT is not able to enter into an AFA with a developer, the County has entered in the donation agreement with 170 North Star Development, Inc. and will, upon approval, enter into the AFA with TxDOT to help facilitate the progression of this project.

In accordance with Government Code, Chapter 791, and Transportation Code 201.209 and Chapter 221, TxDOT is authorized to contract with municipalities and political subdivisions and has determined that Tarrant County's participation on this project is in the best interest of the citizens of the State.

Upon consideration of the draft AFA and, if approved by the court, the Transportation Department will provide notification to TxDOT staff to continue with the review process. The attached AFA is a draft to be formally signed via hardcopies that will be routed through the Transportation Services, following TxDOT's Contract Services Division reviewal and approval. Once executed, Tarrant County will contribute design plans, specifics and estimates as the local government's participation in the Project.

This agreement has been reviewed by the Auditor's Office and approved as to form by the District Attorney's Office.

FISCAL IMPACT

There is no fiscal impact associated with this item.

PASSED AND APPROVED on December 9, 2025.

COUNTY OF TARRANT
STATE OF TEXAS

By: Separate Electronic Signature Page
Tim O'Hare
County Judge

APPROVED AS TO FORM:

_____
District Attorney's Office*

*By law, the District Attorney's Office may only approve contracts for its clients. We reviewed this document as to form from our client's legal perspective. Other parties may not rely on this approval. Instead, those parties should seek contract review from independent counsel.

Attachments

CSJ 0014-15-087 Draft AFA.pdf

CCSJ #	**0014-15-087**		
AFA CSJs	**0013-08-147 & 0014-15-087**		
District #	**02**	**AFA ID**	**Z00011961**
Code Chart 64 #	**50220**		
Project Name	**US 81 County Line To Avondale Haslet**		

STATE OF TEXAS §

COUNTY OF TRAVIS §

ADVANCE FUNDING AGREEMENT FOR VOLUNTARY LOCAL GOVERNMENT CONTRIBUTIONS TO TRANSPORTATION IMPROVEMENT PROJECTS WITH NO REQUIRED MATCH ON-SYSTEM

THIS AGREEMENT is made by and between the State of Texas, acting by and through the **Texas Department of Transportation** called the "State", and the **Tarrant County**, acting by and through its duly authorized officials, called the "Local Government". The State and Local Government shall be collectively referred to as "the parties" hereinafter.

WITNESSETH

WHEREAS, federal law establishes federally funded programs for transportation improvements to implement its public purposes, and

WHEREAS, Transportation Code, Chapters 201 and 221, authorize the State to lay out, construct, maintain, and operate a system of streets, roads, and highways that comprise the State Highway System; and

WHEREAS, Government Code, Chapter 791, and Transportation Code, §201.209 and Chapter 221, authorize the State to contract with municipalities and political subdivisions; and

WHEREAS, the Texas Transportation Commission passed Minute Order Number **116752** authorizing the State to undertake and complete a highway improvement generally described as reconstruction of existing road; and

WHEREAS, the Local Government has requested that the State allow the Local Government to participate in said improvement by funding that portion of the improvement described as **Reconstructing mainlanes and northbound frontage road. Construction of concrete entrance ramp and auxillary lane.** (Project); and

WHEREAS, the State has determined that such participation is in the best interest of the citizens of the state;

NOW, THEREFORE, in consideration of the premises and of the mutual covenants and agreements of the parties, to be by them respectively kept and performed as set forth in this Agreement, it is agreed as follows:

CCSJ #		0014-15-087	
AFA CSJs		0013-08-147 & 0014-15-087	
District #	02	AFA ID	Z00011961
Code Chart 64 #		50220	
Project Name		US 81 County Line To Avondale Haslet	

AGREEMENT

1. Period of the Agreement

This Agreement becomes effective when signed by the last party whose signing makes the Agreement fully executed. This Agreement shall remain in full force and effect until the Project has been completed and accepted by all parties or unless terminated as provided below.

2. Project Funding and Work Responsibilities

A. The State will authorize the performance of only those Project items of work which the Local Government has requested and has agreed to pay for as described in Attachment A, Payment Provision and Work Responsibilities (Attachment A) which is attached to and made a part of this contract. In addition to identifying those items of work paid for by payments to the State, Attachment A also specifies those Project items of work that are the responsibility of the Local Government and will be carried out and completed by the Local Government, at no cost to the State.

B. At least sixty (60) days prior to the date set for receipt of the construction bids, the Local Government shall remit its financial share for the State's estimated construction oversight and construction costs.

C. In the event that the State determines that additional funding by the Local Government is required at any time during the Project, the State will notify the Local Government in writing. The Local Government shall make payment to the State within thirty (30) days from receipt of the State's written notification.

D. Whenever funds are paid by the Local Government to the State under this Agreement, the Local Government shall remit a check or warrant made payable to the "Texas Department of Transportation" or may use the State's Automated Clearing House (ACH) system for electronic transfer of funds in accordance with instructions provided by TxDOT's Finance Division. The funds shall be deposited and managed by the State and may only be applied by the State to the Project.

3. Right of Access

If the Local Government is the owner of any part of the Project site, the Local Government shall permit the State or its authorized representative access to the site to perform any activities required to execute the work.

4. Adjustments Outside the Project Site

The Local Government will provide for all necessary right of way and utility adjustments needed for performance of the work on sites not owned or to be acquired by the State.

5. Responsibilities of the Parties

The State and the Local Government agree that neither party is an agent, servant, or employee of the other party and each party agrees it is responsible for its individual acts and deeds as well as the acts and deeds of its contractors, employees, representatives, and agents.

6. Document and Information Exchange

The Local Government agrees to electronically deliver to the State all general notes, specifications, contract provision requirements and related documentation in a Microsoft® Word or similar document. If requested by the State, the Local Government will use the State's document template. The Local Government shall also provide a detailed construction time estimate including types of activities and month in the format required by the State. This requirement applies whether the local government creates the documents with its own forces or by hiring a consultant or professional provider. At the request of the State, the Local Government shall submit any information required by the State in the format directed by the State.

7. Interest

The State will not pay interest on funds provided by the Local Government. Funds provided by the Local Government will be deposited into, and retained in, the State Treasury.

8. Inspection and Conduct of Work

Unless otherwise specifically stated in Attachment A, the State will supervise and inspect all work performed hereunder and provide such engineering inspection and testing services as may be required to ensure that the Project is accomplished in accordance with the approved plans and specifications. All correspondence and instructions to the contractor performing the work will be the sole responsibility of the State. Unless otherwise specifically stated in Attachment A to this contract, all work will be performed in accordance with the *Standard Specifications for Construction and Maintenance of Highways, Streets, and Bridges* adopted by the State and incorporated in this agreement by reference, or special specifications approved by the State.

9. Increased Costs

If any existing or future local ordinances, commissioners court orders, rules, policies, or other directives, including but not limited to outdoor advertising billboards and storm water drainage facility requirements, are more restrictive than State or Federal Regulations, or if any other locally proposed changes, including but not limited to plats or replats, result in increased cost to the department for a highway improvement project, then any increased costs associated with the ordinances or changes will be paid by the Local Government. The cost of providing right of way acquired by the State shall mean the total expenses in acquiring the property interests either through negotiations or eminent domain proceedings, including but not limited to expenses related to relocation, removal, and adjustment of eligible utilities.

10. Insurance

If this Agreement authorizes the Local Government or its contractor to perform any work on State right of way, before beginning work the entity performing the work shall provide the State with a fully executed copy of the State's Form 1560 Certificate of Insurance verifying the existence of coverage in the amounts and types specified on the Certificate of Insurance for all persons and entities working on State right of way. This coverage shall be maintained until all work on the State right of way is complete. If coverage is not

DRAFT

maintained, all work on State right of way shall cease immediately, and the State may recover damages and all costs of completing the work.

11. Project Maintenance

The Local Government shall be responsible for maintenance of locally owned roads and locally owned facilities after completion of the work. The State shall be responsible for maintenance of the State highway system after completion of the work if the work was on the State highway system, unless otherwise provided for in Attachment A or existing maintenance agreements with the Local Government.

12. Termination

A. This agreement may be terminated in the following manner:
   1. By mutual written agreement and consent of both parties;
   2. By either party upon the failure of the other party to fulfill the obligations set forth in this agreement; or
   3. By the State if it determines that the performance of the Project is not in the best interest of the State.

B. If the agreement is terminated in accordance with the above provisions, the Local Government will be responsible for the payment of Project costs incurred by the State on behalf of the Local Government up to the time of termination.

C. Upon completion of the Project, the State will perform an audit of the Project costs. Any funds due to the Local Government, the State, or the Federal Government will be promptly paid by the owing party.

13. Notices

All notices to either party by the other required under this agreement shall be delivered personally or sent by certified or U.S. mail, postage prepaid or sent by electronic mail, (electronic notice being permitted to the extent permitted by law but only after a separate written consent of the parties), addressed to such party at the following addresses:

Local Government:	**State:**
Tarrant County ATTN: County Judge 100 East Weatherford Street, Suite 501 Fort Worth, TX, 76196-0206	Texas Department of Transportation ATTN: Director of Contract Services 125 E. 11th Street Austin, TX 78701

All notices shall be deemed given on the date so delivered or so deposited in the mail, unless otherwise provided in this agreement. Either party may change the above address by sending written notice of the change to the other party. Either party may request in writing that such notices shall be delivered personally or by certified U.S. mail and such request shall be honored and carried out by the other party.

14. Sole Agreement

In the event the terms of the agreement are in conflict with the provisions of any other existing agreements between the Local Government and the State, the latest agreement shall take precedence over the other agreements in matters related to the Project.

15. Successors and Assigns

The State and the Local Government each binds itself, its successors, executors, assigns, and administrators to the other party to this agreement and to the successors, executors, assigns, and administrators of such other party in respect to all covenants of this agreement.

16. Amendments

By mutual written consent of the parties, this agreement may be amended in writing prior to its expiration.

17. State Auditor

Pursuant to Texas Government Code § 2262.154, the state auditor may conduct an audit or investigation of any entity receiving funds from the state directly under the contract or indirectly through a subcontract under the contract. Acceptance of funds directly under the contract or indirectly through a subcontract under this contract acts as acceptance of the authority of the state auditor, under the direction of the legislative audit committee, to conduct an audit or investigation in connection with those funds. An entity that is the subject of an audit or investigation must provide the state auditor with access to any information the state auditor considers relevant to the investigation or audit.

18. Signatory Warranty

Each signatory warrants that the signatory has necessary authority to execute this Agreement on behalf of the entity represented.

DRAFT

CCSJ #	**0014-15-087**		
AFA CSJs	**0013-08-147 & 0014-15-087**		
District #	**02**	**AFA ID**	**Z00011961**
Code Chart 64 #	**50220**		
Project Name	**US 81 County Line To Avondale Haslet**		

THIS AGREEMENT IS EXECUTED by the State and the Local Government.

THE STATE OF TEXAS	**THE LOCAL GOVERNMENT**
Signature	Signature
Typed or Printed Name	Typed or Printed Name
Typed or Printed Title	Typed or Printed Title
Date	Date

DRAFT

CCSJ #		**0014-15-087**	
AFA CSJs		**0013-08-147 & 0014-15-087**	
District #	**02**	**AFA ID**	**Z00011961**
Code Chart 64 #		**50220**	
Project Name		**US 81 County Line To Avondale Haslet**	

ATTACHMENT A
PAYMENT PROVISION AND WORK RESPONSIBILITIES

The Local Government has requested to participate in the preparation of Plans, Specifications and Estimate (PS&E) for the following improvements:

- Reconstruction of US 81/287 main lanes
- Reconstruction of a portion of NB frontage road
- Construct entrance ramp from SB frontage road and acceleration lane
- Construct cross culvert 1 – 5'x 4'
- Approximately 550 LF of retaining wall

The Local Government will contribute the PS&E for an amount of $700,000 for the Local Government's participation in the Project.

DRAFT

TARRANT COUNTY
COMMISSIONERS COURT COMMUNICATION

Court Date: December 9, 2025	**Court Order #:**	**Page:** 1 of 4
Department: Transportation	**Prepared By:** Sarah VanTassel	**Approved By:** Joseph Jackson

SUBJECT:

Consider Release of the Construction Bond for the Construction Phase and Acceptance of the Maintenance Bond for the Maintenance Phase of the Wyldewood Subdivision - Precinct 2

***** CONSENT AGENDA *****

COMMISSIONERS COURT ACTION REQUESTED

It is requested that the Commissioners Court consider the release of the Construction Bond for the construction phase and the acceptance of the Maintenance Bond for the maintenance phase of the Wyldewood subdivision located in Precinct 2.

BACKGROUND

The Maintenance Bond will expire following the completion of all roads and streets, providing they have been satisfactorily maintained for a period of two (2) years as determined by the Transportation Services Department, and upon release of the bond by Court Order from the Commissioners Court.

The construction of all roads, streets, and drainage structures in this subdivision has been completed to the satisfaction of the Transportation Services Department.

FISCAL IMPACT

There is no fiscal impact associated with this item.

Attachments

Wyldewood.TCP-24-004.UNINC-Maintenance Bond-10282025.pdf

Wyldewood.TCP-24-004.UNINC-Recorded Plat-01312025.pdf

Bond Number: CNB-44409-00

MAINTENANCE BOND

STATE OF TEXAS §
COUNTY OF TARRANT §

KNOW ALL MEN BY THESE PRESENTS:

THAT we, BT Builders LLC of Fort Worth, Texas, as Principal, and Insurors Indemnity Company as Surety, whose address is P.O. Box 32577, Waco, TX 76703-4200, are held and firmly bound unto the County of Tarrant, State of Texas, as Obligee, through its County Judge, or his successor in office, in the sum of two hundred fifty eight thousand three hundred sixty three and 00/100---------- dollars ($258,363.00), for the payment of which well and truly be made, we bind ourselves, and each of us, our heirs executors, administrators, successors and assigns, jointly and severally, by these presents.

WHEREAS, the said Principal has sub-divided and platted a certain tract of land located outside the limits of an incorporated city or town in Tarrant County, Texas, said subdivision known as Wyldewood Circle Subdivision, more fully described as 8134 Ben Day Murrin N, Fort Worth, TX 76126 (provide legal description - e.g. survey and abstract or lot and block); and

WHEREAS, the said Principal has dedicated to the public certain roads and streets as indicated on the plat, and the Principal desires Tarrant County, Texas, to accept for maintenance and operation on behalf of the public these dedicated improvements;

WHEREAS, Tarrant County will not accept for maintenance and operation on behalf of the public the dedicated roads and streets UNLESS AND UNTIL the said Principal has constructed, maintained and operated the said improvements, together with any associated drainage improvements, for a period of two consecutive years, beginning on the date this Bond is fully executed, with said dedicated roads, streets and associated drainage improvements being constructed, maintained and operated by said Principal: (1) in conformity with the specifications contained on the plat recorded in the Tarrant County Clerk's Office in D225016666; (2) in accordance with the *Tarrant County Development Regulations Manual and Engineering Standards Manual* promulgated by the Commissioners Court of Tarrant County, Texas; and (3) to the satisfaction of the Transportation Services Department of Tarrant County.

NOW, THEREFORE, THE CONDITIONS OF THIS OBLIGATION ARE SUCH that the obligation begins as of the date this Bond is fully executed and will remain in effect until:

(1) the Principal has constructed, maintained and operated all dedicated roads, streets and associated drainage improvements for a period of two consecutive years, beginning on the date this Bond is fully executed:

(a) in conformity with the specifications contained on the plat recorded in the Tarrant County Clerk's Office in D225016666;

(b) in accordance with the *Tarrant County Development Regulations Manual and Engineering Standards Manual* promulgated by the Commissioners Court of Tarrant County, Texas; and

(c) to the satisfaction of the Transportation Services Department of Tarrant County; and

Bond Number: CNB-44409-00

(2) the Commissioners Court of Tarrant County, Texas, formally releases by a Court Order the Principal and Surety from liability under this Bond.

IN WITNESS WHEREOF, the Principal and Surety have hereunto set their hands and seals this 14th day of October, 20 25 .

PRINCIPAL

By: BT Builders LLC

Address: ~~8038~~ 7781 Hencken Ranch, Fort Worth, TX 76126

SURETY

By: Insurors Indemnity Company

Address: P.O. Box 32577, Waco, TX 76703-4200

State of Texas
County of Tarrant

Whereas BT Builders, LLC, being the sole owner of that certain 9.991 acre tract, situated in the J.T. GILLILAND SURVEY, ABSTRACT No. 610, Tarrant County, Texas, and being comprised of all of that certain tract described in instrument to BT Builders, LLC, recorded in Clerk's File No. D224116031, of the Official Public Records of Tarrant County, Texas, (O.P.R.T.C.T.); said 9.991 acre tract being more particularly described by metes and bounds as follows:

(Bearings, Distances, and/or Areas derived from GNSS observations performed by Texas Surveying & Engineering, Inc. and reflect N.A.D. 1983, Texas State Plane Coordinate System, North Central Zone 4202; Grid - US Survey Feet):

BEGINNING at a MagNail in asphalt set in the centerline of Ben Day Murrin N. Road, (60 feet wide, Vol. 7077, Pg. 429, O.P.R.T.C.T.), for the northeast corner of that certain called 10.48 acre tract described in instrument to Sharon Eckels, recorded under Document Number D208464613, O.P.R.T.C.T., being the southeast corner of said 9.991 acre tract and the herein described tract, from which a MagNail in asphalt found for the southeast corner of the remainder of said 10.48 acre tract bears S 00°38'28" E, 352.91 feet;

THENCE S 89°42'42" W, with the south line of said 9.991 acre tract, the north line of said 10.48 acre tract, at 30.00 feet pass a 1/2" iron rod with cap stamped "Texas Surveying, Inc." set in the west right-of-way of said Ben Day Murrin N. Road, in all a total distance of 648.78 feet, to a 5/8" iron rod found in the east line of that certain called 10.02 acre tract described in instrument to Billy Ray Brammer, recorded in Volume 7053, Page 2167, O.P.R.T.C.T., for the northwest corner of said 10.48 acre tract, being the southwest corner of said 9.991 acre tract and the herein described tract;

THENCE N 00°38'46" W, with the west line of said 9.991 acre tract, at 623.66 feet pass a 1/2" iron rod found for the northeast corner of that certain called 9.99 acre tract described in instrument to Janie & Simon Rico, recorded in Volume 13136, Page 13, being the southeast corner of Hencken Ranch Road, (30' Public Access Easement, Vol. 12037, Pg. 1656 & Vol. 10927, Pg 1738, O.P.R.T.C.T.), at 653.66 feet pass a 1/2" iron rod found for the northeast corner of said Hencken Ranch Road, being the southeast corner of Lot 13, Block 3, Hencken Ranch Estates, plat of said subdivision recorded under Document Number D215241136, of the Plat Records of Tarrant County, Texas, in all a total distance of 670.82 feet, to a 5/8" iron rod found in the east line of said Lot 13, for the southwest corner of that certain called 2.00 acre tract described in instrument to Timothy & Erica Howell, recorded under Document Number D207093284, O.P.R.T.C.T., being the northwest corner of said 9.991 acre tract and the herein described tract;

THENCE N 89°42'42" E, with the north line of said 4.017 acre tract, the south line of said 2.00 acre tract, at 618.84 feet pass a 1/2" iron rod with cap stamped "Texas Surveying, Inc." set in the west right-of-way of said Ben Day Murrin N. Road, in all a total distance of 648.84 feet to a punch hole in asphalt found for the southeast corner of said 2.00 acre tract, being the northeast corner of said 9.991 acre tract and the herein described tract;

THENCE S 00°38'28" E, 670.82 feet, with the centerline of said Ben Day Murrin N. Road, to the POINT OF BEGINNING, and containing 9.991 acres, more or less.

Surveyor's Certificate

Know All Men By These Presents:

That I, Zachariah R. Savory, do hereby certify that I prepared this plat from an actual and accurate survey of the land, that the corner monuments shown thereon as "set" were properly placed under my personal supervision, in accordance with Tarrant County Development and Land Use Regulations.

Zachariah R. Savory, Registered Professional Land Surveyor No. 5966
Texas Surveying & Engineering, Inc.
104 S. Walnut St, Weatherford, TX 76086
weatherford@txsurveying.com - 817-594-0400
Project ID: ANO6069-P
Field Date: March 22, 2024
Revised Date: January 8, 2024

STATE OF TEXAS · REGISTERED · ZACHARIAH R SAVORY · 5966 · PROFESSIONAL · LAND SURVEYOR

Now, Therefore, Know All Men By These Presents:

that BT Builders, LLC, acting herein by and through its duly authorized officer(s), do(es) hereby adopt this plat designating the herein above described property as Lots 1-8, Wyldewood, an addition in Tarrant County, Texas; and do(es) hereby dedicate to the public's use the streets, rights-of-way and easements shown thereon. All parties with an interest in the title of this property have joined in any dedication. Tarrant County will not accept the dedication of roads without proof of clear title to those roads.

This plat approved subject to all platting ordinances, rules, regulations and resolutions of Tarrant County, Texas.

Witness, my hand, this the 13th day of January, 2025.

By:

BT Builders, LLC
David Blacklock (Managing Member)

State of Texas
County of Parker

Before me, the undersigned authority, a notary public in and for the State of Texas, on this day personally appeared David Blacklock, known to me to be the person whose name is subscribed to the above and foregoing instrument, and acknowledged to me that he/she executed the same for the purpose and considerations therein expressed, on behalf of said entities and in the capacities stated.

given under my hand and seal of office on this the 13th day of January, 2025.

Teresa McGee
Notary Public in and for the State of Texas

TERESA MCGEE
Notary Public, State of Texas
Comm. Expires 08-16-2027
Notary ID 132132208

CURVE	RADIUS	ARC	CHORD BRG	CHORD
C1	60.00'	302.25'	N 00°25'09" W	70.00'
C2	60.00'	151.13'	S 72°34'36" E	114.23'
C3	60.00'	151.13'	S 71°44'17" W	114.23'

LINE	BEARING	DISTANCE
L1	N 00°38'46" W	20.00'
L2	N 89°59'57" E	10.06'
L3	N 73°56'28" E	173.69'
L4	N 89°42'44" E	436.14'
L5	S 00°30'10" E	20.00'
L6	S 89°42'42" W	433.44'
L7	S 73°56'28" W	173.74'
L8	S 89°59'57" W	12.66'

LINE	BEARING	DISTANCE
L9	S 00°30'10" E	10.00'
L10	S 89°42'42" W	305.36'
L11	N 00°38'45" W	10.00'
L12	N 89°42'42" E	305.38'

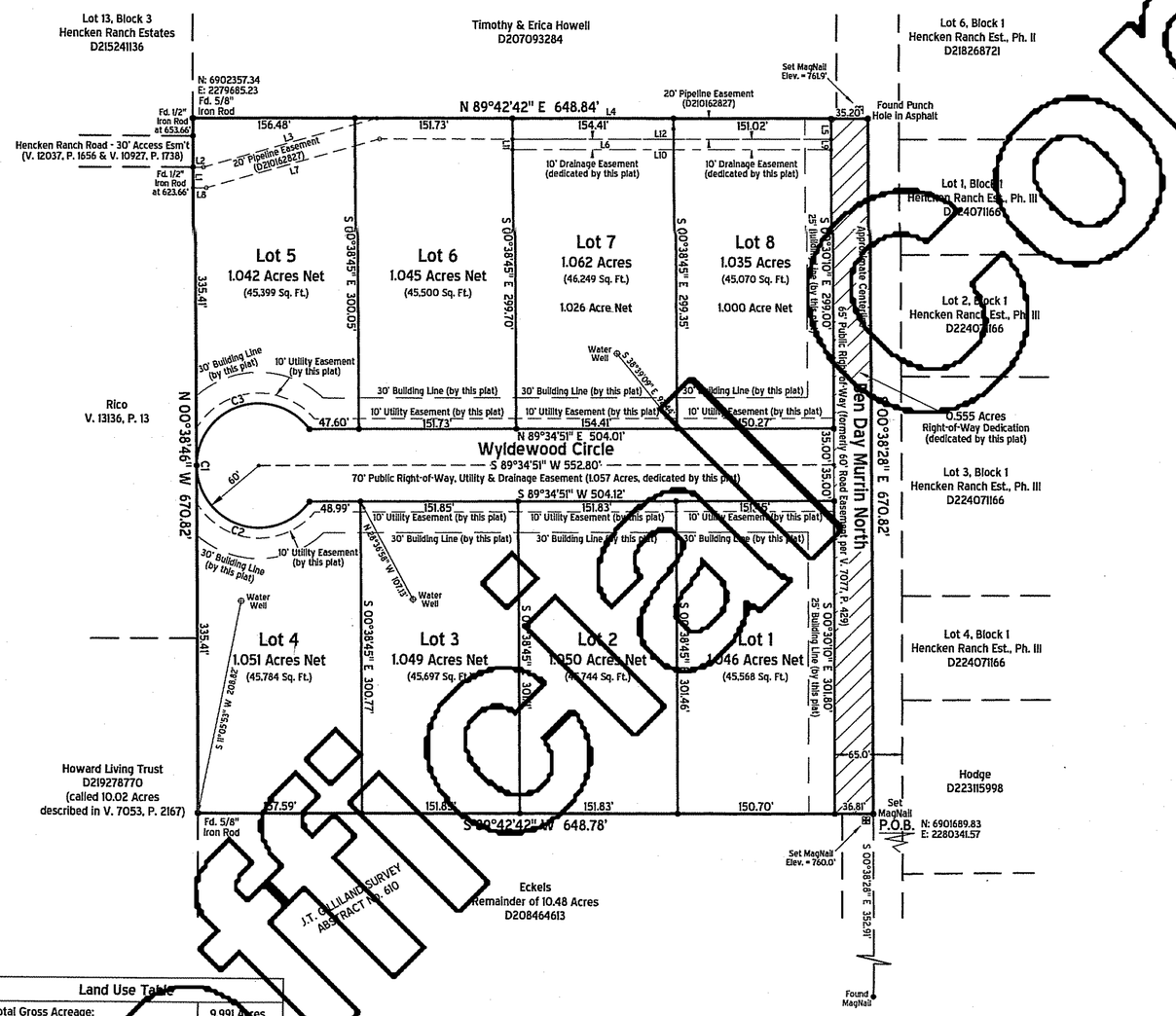

Land Use Table	
Total Gross Acreage:	9.991 Acres
Number of Residential Lots:	8
Number of Non-Residential Lots:	N/A
Non-Residential Acreage:	N/A
Residential Acreage:	8.377 Acres
Private Park Acreage:	N/A
Public Park Acreage:	N/A
Street and Alley Acreage:	1.612 Acres

TCP-24-004

COMMISSIONERS' COURT
TARRANT COUNTY, TEXAS

PLAT APPROVAL DATE: 1/28/2025

BY:

☑ CLERK OF COMMISSIONERS' COURT
☐ TRANSPORTATION SERVICES DEPARTMENT

Note: CO# 144671

Construction not completed within two years of the recording date shall be subject to current County Subdivision Standards and Regulations.

FILED AND RECORDED
OFFICIAL PUBLIC RECORDS OF
TARRANT COUNTY, TEXAS
01/31/2025 02:27 PM

D225016666
PLAT
Pages: 3
Fees: $58.00

MARY LOUISE NICHOLSON
COUNTY CLERK

Vicinity Map (1" = 5,000')

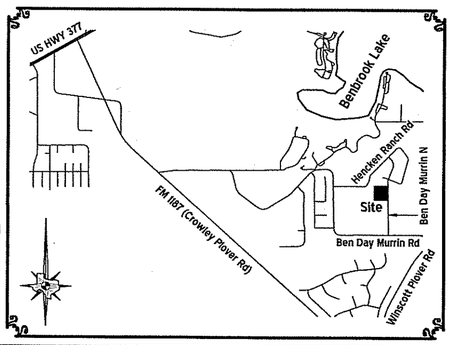

Surveyor:
Zachariah R. Savory, R.P.L.S.
104 S. Walnut St
Weatherford, TX 76086
817-594-0400
weatherford@txsurveying.com

Owner:
BT Builders, LLC
8038 Hencken Ranch Rd
Fort Worth, TX 76126

1" = 100'

0 100 200 300

Sheet 1 of 1
Arch C (18" x 24")

Tarrant County Notes:

1. Development in unincorporated Tarrant County shall be subject to applicable municipal regulations, the current Tarrant County Subdivision and Land Use Regulations and the Tarrant County Fire Code.

2. Tarrant County permits required prior to development within this subdivision, as applicable, include, but are not limited to, construction within the public rights-of-way, driveway access to public roads, development within a designated floodplain, sales yards, stormwater mitigation, and on-site sewage systems.

3. All drainage easements shall be kept clear of fences, buildings, foundations, plantings, and other obstructions to the operation and maintenance of the drainage facility. All drainage easements that are adjacent and parallel to the right-of-way of dedicated public roadways will be maintained by Tarrant County as approved by Tarrant County Transportation Services.

4. The siting and construction of water wells shall be subject to the regulations of the Northern Trinity Groundwater Conservation District.

5. Tarrant County is not responsible for conserving or ensuring the availability of groundwater.

6. Any existing creek, stream, river or drainage channel traversing along or across portions of this addition will remain unobstructed at all times and will be maintained by the adjacent property owner, or the Home Owners Association, if applicable. The County will not be responsible for the maintenance, erosion control, and/or operation of said drainage ways. The home owners shall keep the adjacent drainage ways traversing their property clean and free of debris, silt or other substances which would result in unsanitary conditions, and the County shall have the right of entry for the purpose of inspecting maintenance work by the property owners. The drainage ways are occasionally subject to storm water overflow damages resulting from the storm water overflow and/or bank erosion that cannot be identified. The County shall not be liable for any damages resulting from the occurrence of these phenomena, nor the failure of any structures within the drainage ways. The drainage way crossing each lot is contained within the floodplain/drainage easement line as shown on the plat.

7. Tarrant County shall not be responsible for the maintenance of private streets, drives, emergency access easements, recreation areas, and open spaces; and the owners shall be responsible for the maintenance of private streets, drives, emergency access easements, recreation areas, and open spaces, and said owners agree to indemnify and save harmless Tarrant County from all claims, damages, and losses arising out of or resulting from performance of the obligations of said owners set for in this paragraph.

8. Tarrant County does not enforce subdivision deed restrictions.

9. Land owners and subsequent owners of lots or parcels within this subdivision are encouraged to contact Tarrant County's Transportation Services Department prior to conducting any development activities.

10. Any public utility, including the County, shall have the right to remove and keep clear all or part of any building, fences, trees, overgrown shrubs or improvements that in any way endanger or interfere with the construction, maintenance, or efficiency of its respective systems on any of the easement or right-of-way shown on the plat (or filed by a separate instrument that is associated with said property); and any public utility, including the County, shall have the right at all times an ingress and egress to and from upon said easements for the purpose of construction, reconstruction, inspection, patrolling, maintaining, and adding to or removing all or part of its respective systems without the necessity at any time of procuring the permission of anyone. Property owners shall maintain easements. The County can remove trees or5 any other improvement(s) and does not have the responsibility to replace them.

11. Tarrant County requires a minimum lot size of 1.0 acre (net) for properties that are not served by a public water system, and that will be served by private on-site sewage facilities (OSSF). For lots that are less than 1.0 acre (net) and not served by a public water system, landowners shall submit a formal request for a variance of the Tarrant County Development Regulations relating to lot size and a written authorization from Tarrant County Public Health confirming that it has no objections with the processing of the plat. The approval of this plat does not guarantee that any lot is suitable for an OSSF.

12. All parties with an interest in the title of this property have joined in any dedication. Tarrant County will not accept the dedication of roads without proof of clear title to those roads.

13. Water services to be provided by private water wells. Sanitary sewer services to be provided by private on-site septic facilities.

14. Per Tracking No. BAX-24-054, this property was released by petition from the Extraterritorial Jurisdiction of the City of Fort Worth.

15. Tarrant County does not enforce building setbacks exceeding the minimum requirement of 25 feet.

Surveyor's Notes:

1) No abstract of title or title commitment was provided to this surveyor. Record research performed by this surveyor was made only for the purpose of determining the boundary of this property and of the adjoining parcels. Record documents other than those shown on this survey may exist and encumber this property.

2) Currently this tract appears to be located within the following area:

Other Areas, Zone "X" - Areas determined to be outside the 0.2% annual chance floodplain.

according to the F.I.R.M. Community Panel 48439C0405K, dated September 25, 2009; for up to date flood hazard information always visit the official F.E.M.A. website at FEMA.gov.

3) Bearings, Distances, and/or Areas derived from GNSS observations and reflect N.A.D. 1983, Texas State Plane Coordinate System, North Central Zone 4202 (Grid - US Survey Feet).

4) Underground utilities were not located during this survey. Call 811 and/or Utility Providers before excavation or construction.

5) Please consult all applicable governing entities regarding rules & regulations, that may affect construction on this property.

6) At time of plat, this property does not lie within any Extraterritorial Jurisdiction or Limits of any city or town.

7) All corners are C.I.R.S (1/2" Capped Iron Rod Set with orange plastic caps stamped "Texas Surveying"), unless otherwise noted.

8) P.O.B. = Point of Beginning

9) O.P.R.T.C.T. = Official Public Records, Tarrant County, Texas

10) P.R.T.C.T. = Plat Records, Tarrant County, Texas

Final Plat
Lots 1-8
Wyldewood
an addition in Tarrant County, Texas

Being a 9.991 acre tract of land situated in the J.T. Gilliland Survey, Abstract No. 610, Tarrant County, Texas

January 2025

TEXAS SURVEYING & ENGINEERING INC.
WEATHERFORD - MINERAL WELLS - ALEDO
SURVEYING FIRM No. 10100000 - ENGINEERING FIRM No. F-17586

Unofficial Document

TARRANT COUNTY
COMMISSIONERS COURT COMMUNICATION

Court Date: December 9, 2025	**Court Order #:**	**Page:** 1 of 6
Department: Transportation	**Prepared By:** Sarah VanTassel	**Approved By:** Joseph Jackson

SUBJECT:

Consideration of Quitclaim Deeds Conveying Any Interest Tarrant County May Own in Right-of-Way for a Roadway Known as Old Handley Ederville Road

***** CONSENT AGENDA *****

COMMISSIONERS COURT ACTION REQUESTED

It is requested that the Commissioners Court consider the conveyance through Quitclaim Deeds of any interest Tarrant County may own, if any, in the surface estate to a tract of land located within Tract 2E of the James F. Redding Survey, Abstract 1302.

BACKGROUND

Tarrant County acquired two parcels of land in 1932 for right-of-way purposes. Following the acquisition, the roadway known as Old Handley Ederville Road, was subsequently annexed by the City of Fort Worth, at which time the County ceased maintaining the roadway. Despite the change in jurisdiction, Tarrant County retained fee title ownership on both properties.

During the period of City maintenance, the roadway ceased to be used for roadway purposes. At some point thereafter, the properties were placed back on the Tarrant County tax rolls. The parcles were sold to a private owners, and taxes on the properties have been paid by subsequent owners since that time.

Although the properties have been conveyed and taxed as privately held land, Tarrant County still retains fee title. In order to correct this discrepancy, the County desires to execute a Quitclaim Deed conveying any County interest in the property to the current record owners.

The Criminal District Attorney's Office has reviewed the Quitclaim Deeds and approved as to form.

FISCAL IMPACT

There is no fiscal impact associated with this item.

Attachments

Quitclaim Deed - County to Focus 2000 with Property Description.pdf

Quitclaim Deed - County to BCD6301 with description.pdf

NOTICE OF CONFIDENTIALITY RIGHTS: IF YOU ARE A NATURAL PERSON, YOU MAY REMOVE OR STRIKE ANY OR ALL OF THE FOLLOWING INFORMATION FROM ANY INSTRUMENT BEFORE IT IS FILED FOR RECORD IN THE PUBLIC RECORDS: YOUR SOCIAL SECURITY NUMBER OR YOUR DRIVER'S LICENSE NUMBER.

QUITCLAIM DEED

GRANTOR:	TARRANT COUNTY, TEXAS
GRANTOR'S MAILING ADDRESS:	Tarrant County Transportation Department 200 Taylor Street, Suite 305 Fort Worth, Texas 76196-0601
GRANTEE:	FOCUS 2000 LTD
GRANTEE'S MAILING ADDRESS:	10013 Granbury Highway Weatherford, Texas 76087

PROPERTY (including any improvements): Being situated in The City of Fort Worth, Tarrant County Texas, and being a tract of land in the James F. Redding Survey, Abstract No. 1302, and the Hugh F. Largent Survey, Abstract No. 960, said tract identified by the Tarrant County Appraisal Distract as Tract 2E3, and further described as follows:

All of those certain tracts conveyed to Tarrant County by deeds recorded in Volume 1137, Page 634, and Volume 1137, Page 635, Tarrant County Deed Records.

SAVE and EXCEPT those certain portions of said Tarrant County deeds within the descriptions in deed to BCD6301, LLC, Filed under County Clerk's File No. D218177283

CONVEYANCE: Grantor quitclaims to Grantee all of Grantor's right, title, and interest, if any, in and to the surface estate of the Property, to have and to hold it to Grantee and Grantee's heirs, successors, and assigns forever. Neither Grantor nor Grantor's heirs, successors, or assigns will have, claim, or demand any right or title to the surface estate of the Property.

When the context requires, singular nouns and pronouns include the plural.

DATED this ____ day of _____, 2025.

By:_____
Tim O'Hare, Tarrant County Judge

STATE OF TEXAS
COUNTY OF TARRANT

This instrument was acknowledged before me on the_____ day of _____, 2025, by Tim O'Hare, Tarrant County Judge, on behalf of Tarrant County, Texas.

_____
Notary Public, State of Texas

AFTER RECORDING RETURN TO:

Miriam Salazar
Tarrant County Transportation
200 Taylor Street, Suite 305
Fort Worth, Texas 76196

NOTICE OF CONFIDENTIALITY RIGHTS: IF YOU ARE A NATURAL PERSON, YOU MAY REMOVE OR STRIKE ANY OR ALL OF THE FOLLOWING INFORMATION FROM ANY INSTRUMENT BEFORE IT IS FILED FOR RECORD IN THE PUBLIC RECORDS: YOUR SOCIAL SECURITY NUMBER OR YOUR DRIVER'S LICENSE NUMBER.

QUITCLAIM DEED

GRANTOR:	TARRANT COUNTY, TEXAS
GRANTOR'S MAILING ADDRESS:	Tarrant County Transportation Department 200 Taylor Street, Suite 305 Fort Worth, Texas 76196-0601
GRANTEE:	BCD6301 L.L.C., a Texas Limited Liability Company
GRANTEE'S MAILING ADDRESS:	6301 Randol Mill Rd. Fort Worth, Texas 76112

PROPERTY (including any improvements): Being situated in The City of Fort Worth, Tarrant County Texas and being a tract of land in the James F. Redding Survey, Abstract No. 1302, and being portions of those certain tracts conveyed to Tarrant County by deeds recorded in in Volume 1137, Page 634, and Volume 1137, Page 635, Tarrant County Deed Records, said portions also being a part of that certain tract deeded to BCD6301, LLC, filed under County Clerk's File No. D218177283, and further described as follows:

Being a portion of those certain tracts conveyed to Tarrant County by deeds recorded in Volume 1137, Page 634, and Volume 1137, Page 635, Tarrant County Deed Records that are within those certain tracts described as Tract One, and Tract Two, to said BCD6301, LLC.

CONVEYANCE: Grantor quitclaims to Grantee all of Grantor's right, title, and interest, if any, in and to the surface estate of the Property, to have and to hold it to Grantee and Grantee's heirs, successors, and assigns forever. Neither Grantor nor Grantor's heirs, successors, or assigns will have, claim, or demand any right or title to the surface estate of the Property.

When the context requires, singular nouns and pronouns include the plural.

DATED this ____ day of _____, 2025.

By: _____
Tim O'Hare
Tarrant County Judge

STATE OF TEXAS
COUNTY OF TARRANT

This instrument was acknowledged before me on the_____ day of _____, 2025, by Tim O'Hare, Tarrant County Judge, on behalf of Tarrant County, Texas.

_____
Notary Public, State of Texas

AFTER RECORDING RETURN TO:

Miriam Salazar
Tarrant County Transportation
200 Taylor Street, Suite 305
Fort Worth, Texas 76196

TARRANT COUNTY
COMMISSIONERS COURT COMMUNICATION

Court Date: December 9, 2025	**Court Order #:**	**Page:** 1 of 5
Department: Transportation	**Prepared By:** Sarah VanTassel	**Approved By:** Joseph Jackson

SUBJECT:

Consideration of a Donation Agreement between Tarrant County and Sandstrom Business Park, LTD. to Fund Improvements to Grants Lane - Precinct 4

***** CONSENT AGENDA *****

COMMISSIONERS COURT ACTION REQUESTED

It is requested that the Commissioners Court approve a Donation Agreement between Tarrant County and Sandstrom Business Park, LTD. (SBP) to receive funding for improvements to Grants Lane, a public road from North of Sandstrom Way to North of the proposed Sandstrom Business Parkway, approximately 1,050 feet in Precinct 4.

BACKGROUND

SBP proposes to make a cash donation to the County in an amount not to exceed $154,647.05 to fund the actual construction costs for improvements to Grants Lane, as determined by the County. The County and SBP will coordinate all construction work according to the attached donation agreement.

The Donation Agreement will take effect upon approval by both parties and will remain in force until the completion of the project, as determined by Tarrant County.

The District Attorney's Office has reviewed and approved the Donation Agreement as to form.

FISCAL IMPACT

Donated funds will be placed in account 26100-2026 Road and Bridge Fund/6410300000 Precinct 4 Maintenance/484005 Donations.

PASSED AND APPROVED on December 9, 2025.

COUNTY OF TARRANT
STATE OF TEXAS

_____

Tim O'Hare
County Judge

_____

Manny Ramirez
Commissioner, Precinct 4

APPROVED AS TO FORM:

_____

District Attorney's Office*

*By law, the District Attorney's Office may only approve contracts for its clients. We reviewed this document as to form from our client's legal perspective. Other parties may not rely on this approval. Instead, those parties should seek contract review from independent counsel.

Attachments

Donation Agreement w Attachement A_Clean.pdf

STATE OF TEXAS §
§
COUNTY OF TARRANT §

Donation Agreement for
Grants Lane Rehabilitation

This donation agreement (Agreement) is entered into between Tarrant County, Texas, hereinafter referred to as County, and Sandstrom Business Park, LTD, hereinafter referred to as Donor, and collectively referred to as the parties, for the purpose of funding improvements to Grants Lane, a project the County finds serves a public purpose and serves the public welfare of the citizens of Tarrant County.

After careful consideration, the Commissioners Court of Tarrant County, Texas, has determined that the donation is suitable to aid road building or maintenance and that the application of same to county roads would improve all weather capabilities of said road, and thereby serve a public benefit.

The Donor and the County make the following findings of fact:

1. The County desires to reconstruct and improve Grants Lane, a public road hereinafter referred to as "Project", from North of Sandstrom Way to North of proposed Sandstrom Business Parkway, approximately 1,050 feet;

2. The Donor desires to convey to the County, within sixty (60) days prior to commencement of construction, the actual costs of construction as determined by the County, but in an amount not to exceed the sum of $154,647.05, as a cash donation for the Project. Failure to convey full payment to the County within fifteen (15) days of written notice delivered to Donor that construction will commence within sixty (60) days will automatically terminate this Agreement;

3. The County will deposit the Donation into the appropriate Tarrant County account, the proceeds of which will be made available for the Project;

4. The County will provide labor and complete the Sitework items, install a portion of the storm drainage improvements consisting of the following: 18" RCP, 15" RCP, 15" 4:1 Pre-Cast Sloped End Treatments, 3'x2' Box Culvert, and place Riprap (to be provided by Donor) as listed in Attachment A hereto made a part of this Agreement. Additionally, the County will place the 4" Type B Asphalt and 2" Type D Asphalt as listed in the Paving, Pedestrian & Traffic portion of Attachment A.

5. The Donor will coordinate and oversee all conflicting utility relocations to be completed to the satisfaction of the County prior to the commencement of County improvements to Grants Lane. Additionally, the Donor will provide Riprap for County placement and construct the remaining items in Attachment A including: Headwalls, Energy Dissipation Basin, Erosion Control, Concrete Flatwork, and Guardrail.

   The Donor agrees to dedicate to the County an additional twenty-five (25) feet of right-of-way for roadway, utilities and drainage purposes. The south line of said easement shall be contiguous with the north line of the twenty-five (25) foot right-of-way dedication shown on the plat of Sandstrom Addition, aka Grants Lane Addition, as filed under County Clerk's File No. D222096595, and the west line of the easement shall be contiguous with the east line of

the twenty (20) foot right-of-way granted to Tarrant County by the deed recorded in Volume 388, Page 642, Tarrant County Deed Records. The proposed twenty-five (25) feet right-of-way easement shall extend northerly to the northern terminus of the Project.

6. The County will complete the Project within twelve (12) months from the date when all Conflicting utility relocations have been completed as determined by the County, unless delayed for reasons beyond the County's control; and

7. The County has the legal authority to accept the donation described in this Agreement pursuant to Texas Local Government Code Chapter 81, Subchapter A, Sec. 81.032.

I.
PROJECT DESCRIPTION

This Project will reconstruct Grants Lane, from North of Sandstrom Way to North of proposed Sandstrom Business Parkway, approximately 1,050 feet, as a two-lane asphalt roadway. Reconstruction will consist of removing the existing road surface, lime stabilizing the subgrade at a depth of 10-inches and placing a 4-inch Type 'B' HMAC binder layer with a 2-inch Type 'D' HMAC surface course.

II.
TERM

This Agreement shall become effective upon the approval of both parties and shall terminate upon the completion of the Project, as determined by the County.

III.
PARTIES

This Agreement shall be binding upon and shall inure to the benefit of the parties, i.e., County and Donor and their heirs, successors and assigns. Notwithstanding any provision to the contrary in this Donation Agreement, the parties agree that their relationship with respect to the gift contemplated herein is one of donor and County only, and no provision of this Donation Agreement shall be construed to create any other type of status or relationship between the parties with respect to such gift.

IV.
ASSIGNMENT

Neither party may assign, in whole nor in part, any interest it may have in this Agreement without the prior written consent of the other party.

V.
THIRD PARTY BENEFICIARY EXCLUDED

No person other than a party to this Agreement may bring a cause of action pursuant to this Agreement as a third-party beneficiary. This Agreement may not be interpreted to waive the sovereign or governmental immunity of any party to this Agreement to the extent such party may

have immunity under Texas law.

VI
ENTIRE AGREEMENT

This Agreement represents the entire understanding of and between the parties and superseded all prior representations. This Agreement may not be varied orally but must be amended by written document of subsequent date duly executed by these parties.

VII.
VENUE

This Agreement shall be governed by the laws of the State of Texas and venue for any action under this Agreement shall be in the district courts of Tarrant County, Texas.

VIII.
TERMINATION AND NOTICE

The County may terminate this Agreement by providing written notice to the Donor at least thirty (30) days prior to the intended date of termination. In such event, the County shall return to the Donor all donated funds.

Any notice given under this Agreement shall be deemed given when personally delivered or mailed by certified or registered mail (with return-receipt and postage prepaid) and addressed to:

VIV.
EXECUTION OF AGREEMENT

This agreement may be executed in one or more counterparts, each of which will be deemed to be an original copy of this agreement, and all of which, when taken together, shall be deemed to constitute one and the same agreement. The exchange of copies of this agreement and of signature pages by electronic transmission shall constitute effective execution and delivery of this agreement as to the parties and may be used in lieu of the original agreement for all purposes. Signatures of the parties transmitted or executed electronically shall be deemed to be their original signatures for any purposes whatsoever.

COUNTY (County):
County Administrator
Tarrant County
100 E Weatherford St
Fort Worth, Texas 76196

Sandstrom Business Park, LTD (Donor)
Mr. Scott Schambacher
1714 Avondale Haslet Rd
Haslet, Texas 76052

APPROVED on this day the _____ day of _____, 2025, by Tarrant County.

Commissioners Court Order No. _____.

TARRANT COUNTY, TEXAS

_____
Tim O'Hare, County Judge

SANDSTROM BUSINESS PARK, LTD
BY ITS, GENERAL PARTNER
SANDSTROM DEVELOPMENT
SERVICES, LLC

_____
Scott Schambacher, President

_____
Manny Ramirez, Commissioner, Precinct 4

APPROVED AS TO FORM:

_____
Criminal District Attorney's Office*

* By law, the Criminal District Attorney's Office may only approve contracts for its clients. We reviewed this document as to form from our client's legal perspective. Other parties may not rely on this approval. Instead those parties should seek contract review from independent counsel.

OES, Inc.
705 Jones St., Fort Worth, TX 76102
(940) 595-0528

5/19/2025
Grants Lane Rehabilitation, North 1,050 LF
Tarrant County, Texas

Preliminary Cost Estimate

	Quantity	Unit	Unit Cost	Total
SITEWORK				
Earthwork				
Site prep., clearing, grubbing, soil removal, Total area of disturbance	1.15	S.F.		
Site prep., clearing, grubbing, soil removal (Wooded)	0	Acres		
On-site placement, compaction CUT, includes V and Trapezoidal ditches	1,565	C.Y.		
On-site placement, compaction FILL	1,509	C.Y.		
Export, spoils may be placed on Developer's site, Lot 2 and 3	56	C.Y.		
Wet Weather				
Hydrated Lime @ 38#/sy	61	Tons		
10" Depth Soil Stabilization (lime) @ 28-ft width	3231	S.Y.		
Sub-total				
Storm Drainage				
Storm Sewer				
18" RCP CL-IV, Culvert C-3	208	L.F.		
Headwall, TxDOT CH-PW-S, Skewed Headwall for Culvert C-3, Quad 18"	2	EACH		
15" RCP, Private Drive Culverts P14 & P15	62	L.F.		
15" 4:1 Pre-Cast Sloped End Treatments, TURNER CO. or approved equal	4	EACH		
3.X2' Box Culvert RCP CL-III, Culvert P16, TXDOT SCP-3 or approved equal	32	L.F.		
Hedwall, TxDOT SETB-PD, Headwall for Culvert P16	2	EACH		
Drainage Structures				
Energy Dissipation Basin @ D.S. end of Culvert C-3	81	S.Y.		
Rip-Rap @ D.S. end of Culvert P16	20	S.Y.		
Erosion Control				
Seed 18" depth V-bar ditch @ 3:1 slope	1250	S.Y.		
Seed 36" depth Trapezoidal bar ditch @ 3:1 slope	333	S.Y.		
other items...				
Sub-total				
PAVING, PEDESTRIAN & TRAFFIC				
Paving				
4" Type B Asphalt @ 26-ft width	2993	S.Y.		
2" Type D Asphalt @ 24-ft width	2756	S.Y.		
Concrete Flatwork, Private Driveway @ P14, 6" concrete @ 3,600 psi	247	S.F.		
Concrete Flatwork, Private Driveway @ P15, 6" concrete @ 3,600 psi	315	S.F.		
Concrete Flatwork, Private Driveway Smith Lot, 5" concrete @ 3,600 psi	616	S.F.		
Concrete Flatwork, Private Driveway @ P16, 5" concrete @ 3,600 psi	111	S.F.		
Gravel Surface Reshaping, western private drives, re-grade to tie to new asphalt, 600 SF each	2	EACH		
Guardrail @ Culvert C-3	100	L.F.		
Sub-total				
SITE GRAND TOTAL				

GRANTS LANE REHABILITATION COUNTY ROADWAY IMPROVEMENT PROJECT NOTES:

1) DISREGARD OPTION TO REPOSITION PRIVATE CULVERTS TO POINTS FURTHER UPSTREAM FOR CULVERTS P14 THRU P16.

2) AN EXISTING FIBER OPTIC COMMUNICATIONS LINE EXISTS NEAR THE EASTERN EXISTING EDGE OF GRANTS LANE PAVEMENT. CONTRACTOR TO CONTACT PROVIDER TO FIND IF RELOCATION IS NECESSARY. DEVELOPER SHALL PURSUE ITS RELOCATION.

3) THE ENGINEER–OF–RECORD SHALL ASSIST/CONSULT AT DEVELOPERS' EXPENSE IN THE PLACEMENT OF THE 8" RIP–RAP FOR THE ENERGY DISSIPATION BASIN. THE STONES SHALL BE MANUALLY ORIENTED LENGTHWISE UPWARDS TO CREATE THE BASIN SLOPES WITH NECESSARY N–VALUE AS DETERMINED BY DESIGNER. THE 100–YR ENERGY GRADIENT LINE DOES NOT EXCEED THE DEPTH OF THE BASIN TO BE PLACED AT THE TAILWATERS OF CULVERT C–3. BASIN RIP–RAP SHALL BE GROUTED TO 4" DEPTH BETWEEN STONES.

4) SEE NOTE ON PLAN VIEW REGARDING ABANDONMENT AND REMOVAL OF WESTERNMOST SINGLE LOCAL DISTRIBUTION LINE OPERATED BY TCEC, TRI–COUNTY ELECTRIC COOP.

5) SEVERAL EXISTING DRIVES ARE PROPOSED TO BE IMPROVED TO BETTER CONNECT TO THE PROPOSED PAVEMENT OF GRANTS LANE. THE EXTENT OF THOSE IMPROVEMENT SIN CONCRETE/GRAVEL IS SHOWN ON THIS PLAN VIEW.

6) THE HEIGHT OF THE ROADWAY WAS SET TO PREVENT 100–YR STORMWATERS FROM OVERTOPPING THE ROADWAYS IN THIS CURRENT STATE. THE MAJORITY OF THE UPPER REACHES OF THE WATERSHED TO THE WEST (OBAC, LLC) IS CURRENTLY CONCENTRATED AND INTRODUCED TO GRANTS LANE AT APPROXIMATELY STA. 4+00. OVERTOPPING OF GRANTS LANE OCCURS DUE TO THE INADEQUATE CAPACITY OF THE EXISTING WESTERN DITCH. AFTER OVERTOPPING THE ROADWAY, RUNOFF THEN IS DIRECTED TOWARDS THE HOMES FRONTING GRANTS LANE AND IS CONVEYED IN A SHALLOW WATERWAY AND CONVEYED SOUTH IN THE FRONTYARDS OF THE HOMES. AN OFF–SITE DIVERSION AIDS IN REDUCING FLOW IN THIS SHALLOW WATERWAY, ADDITIONALLY, 100–YR RUNOFF FOR THE WEST SIDE OF GRANTS LANE IS COLLECTED AND CONVEYED TO A PONT SOUTH OF THE FRONT DOORS OF THE RESIDENCES THROUGH THE PLACEMENT OF CULVERT C–3 AND ACCOMPANYING ENERGY DISSIPATION BASIN. THE ADDITION OF PRIVATE BOX CULVERT P16 PREVENTS THESE WESTERN STORMWATERS FROM ENTERING THE FRONTYARD OF THE HARRIS LOT AND INTRODUCES IT TO A POINT FURTHER DOWNSTREAM THAN THE CURRENT STATE. POST–DEVELOPMENT 100–YR STORMFLOW SHOWN HEREON ILLUSTRATES CONTAINMENT OF MAJOR RUNOFF IN THE NEW FRONTAGE CONVEYANCE STRUCTURES. THIS FIRM MEASURES A REDUCTION IN FLOW DEPTH FOR ALL FOUR FRONTAGE LOTS ALLEVIATING SOME ADVERSE FLOODING OF DRIVEWAYS AND YARDS WHILE ELIMINATING THE OVERTOPPING OF GRANTS LANE IN THIS AREA. STORMWATER FLOW HAS BEEN REDUCED FROM EXISTING STATE IN THE NORTH–SOUTH DIRECTION AS FLOW VOLUMES HAVE DECREASED DUE TO THESE IMPROVEMENTS. EVIDENCE OF CURRENT FLOODING AND SILT ACCUMULATION DOCUMENTED FOR THE HARRIS LOT. THIS FIRM ALSO NOTICED THAT THE HARRIS LOT HAS PLACED A SMALL DRAINAGE SYSTEM TO CONVEY STORM FLOW UNDER THEIR EXISTING CONCRETE DRIVEWAY. ALL ANALYSIS AND CONTOURS SHOWN HERE ON BASED ON TOPOGRAPHY COLLECTED EARLY FEBRUARY, 2025.

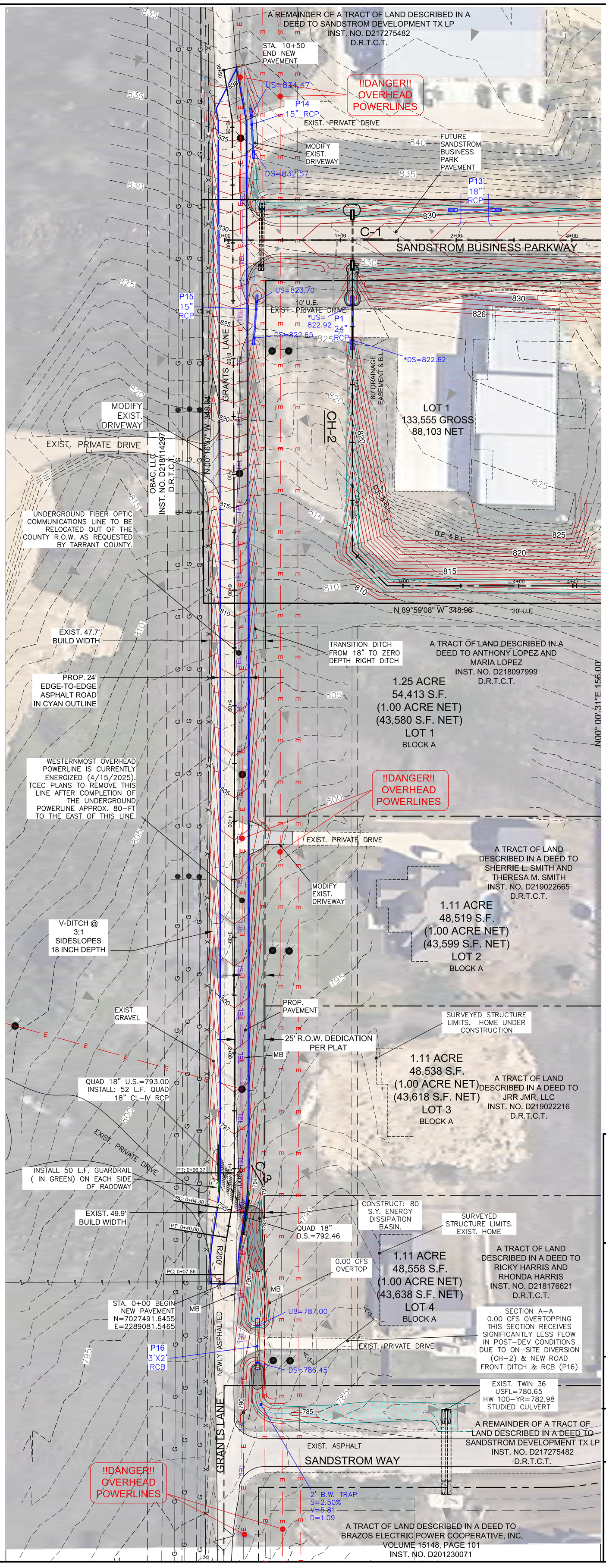

0 40 80 120

GRAPHIC SCALE
1" = 40' HORIZONTAL

GUARDRAIL NOTE: INSTALL GUARDRAIL AS SHOWN UTILIZING METAL BEAM GUARD FENCE PER DETAILS GF WITH TERMINAL STRUCTURES PER DETAIL SGT.

LEGEND

- 100.00 — *FINISHED GRADE SPOT ELEV.*
- 100.00 — *EXISTING GRADE SPOT ELEV.*
- 0.0% — *FINISHED GRADE SLOPE*
- 100 — *EXISTING CONTOUR*
- 100 — *PROPOSED CONTOUR*
- R — *RIDGE – DRAINAGE DIVIDE*
- *FINISHED DRAINAGE FLOW DIRECTION FOR CHANNELS*
- *PROP. 100–YR WATERSPREAD LIMITS – PER MANNINGS CALC'S.*
- *EXISTING DRAINAGE FLOW*
- MFFE=00.00 — *MINIMUM FINISHED FLOOR ELEVATION*
- *PERMANENT EROSION CONTROL DEVICES*

E.T.P.=EXISTING TOP OF PAVEMENT ELEVATION
EG=EXISTING GRADE
FG=FINISHED GRADE
FL=FLOWLINE
GB=GRADE BREAK
HP=HIGHPOINT
DL=DAYLIGHT TO EG
S=SLOPE
TC= TOP OF CURB
TP=TOP OF PAVEMENT
ME=MATCH EXISTING GRADE
TW=TOP OF RETAINING WALL
BW=BOTTOM OF RETAINING WALL
WH=HEIGHT OF RETAINING WALL

NOTE: RIP–RAP DARK GREY SHADED IN PLAN VIEW FOR CLARITY

REVISED 5/11/2025
REPLACED P16
WITH RCB

STATE OF TEXAS
JACK R. MEDCALF
46057
LICENSED PROFESSIONAL ENGINEER
4-17-2025

OES, INC.
TEXAS REGISTERED PROFESSIONAL ENGINEERING FIRM F-11001
705 JONES ST.
FORT WORTH, TX 76102
PH. 940.595.0528

SANDSTROM BUSINESS PARK
TARRANT COUNTY, TEXAS

GRANTS LANE REHABILITATION PLAN VIEW

PROJECT TECHNICIAN
NJO
JOB NUMBER
1143
SHEET NUMBER
10.1

GRANTS LANE REHABILITATION
STA. 0+00 to END

CENTERLINE PROFILE & LEFT DITCH

RIGHT DITCH PROFILE

PVI STA. = 10+50.00
PVI ELEV = 838.99
PVI STA. = 9+02.49
PVI ELEV = 829.50
6.43%
5.98%
STA. 8+50
Q100yr.= 2.59 C.F.S.
DEPTH 100yr.=0.39'
S= 4.98%
V= 4.26 F.P.S.
100 YEAR HGL LEFT DITCH
SANDSTROM BUSINESS PARKWAY PROPOSED INTERSECTION
VERTICAL CURVE
HIGH PT STA = 7+89.47
HIGH PT ELEV = 822.74
PVI STA = 7+59.42
PVI ELEV = 820.95
A.D. = 0.85
K = 70.56
60.07' VC
BVCS: 7+29.39
BVCE: 818.89
EVCS: 7+89.47
EVCE: 822.74
EVCS: 7+00.98
EVCE: 816.86
LOW PT STA = 4+93.68
LOW PT ELEV = 807.02
PVI STA = 5+97.43
PVI ELEV = 809.88
A.D. = -4.08
K = 50.81
207.30' VC
BVCS: 4+93.68
BVCE: 807.02
STA. 9+50
Q100yr.= 2.00 C.F.S.
DEPTH 100yr.=0.33'
S= 6.43%
V= 4.36 F.P.S.
STA. 5+50
Q100yr.= 27.48 C.F.S.
DEPTH 100yr.=1.00'
S= 3.61%
V= 6.87 F.P.S.
STA. 3+50 LEFT DITCH
Q100yr.= 28.77 C.F.S.
DEPTH 100yr.=1.28'
S= 2.75%
V= 5.85 F.P.S.
STA. 1+20
Q100yr.= 33.37 C.F.S.
DEPTH 100yr.=1.44'
S= 2.75%
V= 5.36 F.P.S.
P14
15"
R.C.P.
100 YEAR HGL RIGHT DITCH
STA. 8+00
Q100yr.= 0.30 C.F.S.
DEPTH 100yr.=0.18'
S= 5.98%
V= 2.31 F.P.S.
STA. 6+57
END TYPICAL DITCH CROSS-SECTION RIGHT DITCH
EG @ ROAD CL
CROWN OF ROADWAY
EDGE OF PAVING
SANDSTROM BUSINESS PARKWAY PROPOSED INTERSECTION
P15
15"
R.C.P.
STA. 7+00
Q100yr.= 0.30 C.F.S.
DEPTH 100yr.=0.18'
S= 5.98%
V= 2.31 F.P.S.
CROWN OF ROADWAY
EDGE OF PAVING
PROFILE VIEW LOOKING EAST FROM LEFT SIDE OF ROAD
STA. 5+50
Q100yr.= 1.17 C.F.S.
DEPTH 100yr.=0.33'
S= 3.61%
V= 2.69 F.P.S.
RIGHT DITCH FLOWLINE
STA. 5+57
DAYLIGHT RIGHT DITCH
NOTE: LEFT DITCH AT 18" DEPTH WITH SUFFICIENT CAPACITY TO CARRY 100-YR STORM EVENT FROM DRAINAGE AREA TO WEST & NORTH OF ROADWAY. RIGHT DITCH DOES NOT EXIST FOR THE ENTIRETY OF THE REHABILITATION LENGTH IN BOTH EXISTING AND PROPOSED STATES. A SEPARATE DRAINAGE EASEMENT EXISTS TO EAST OF R.O.W.
LEFT DITCH FLOWLINE
2.78%
HIGH PT STA = 0+92.57
HIGH PT ELEV = 795.98
PVI STA = 0+74.57
PVI ELEV = 795.48
A.D. = 0.89
K = 40.30
36.00' VC
BVCS: 0+56.57
BVCE: 794.82
EVCS: 0+92.57
EVCE: 795.98
VERTICAL CURVE
VERTICAL CURVE
PVI STA = 0+00.00
PVI ELEV = 793.00
LOW PT STA = 0+06.39
LOW PT ELEV = 793.17
PVI STA = 0+25.32
PVI ELEV = 793.68
A.D. = -0.95
K = 40.04
37.85' VC
BVCS: 0+06.39
BVCE: 793.17
EVCS: 0+44.24
EVCE: 794.37
3.66%
2.70%
*SEE EGL NOTE
HW C-3=794.75
CONSTRUCT: TXDOT CH-PW-S HEADWALL (2 LOCATIONS)
TW C-3=793.70
*EGL RIGHT (PURPLE)
HGL RIGHT (RED)
QUAD 18"
Q(100)= 33.37 cfs
Qcap= 56.50 cfs
V=6.64 fps
HW = 794.75
TW = 792.72
C-3
U.S. FL EL. 793.00
14.00 L
STA. 1+03.61
GRANTS LANE
UPSTREAM END
OF CULVERT
C-3
INSTALL: 52 LF (@ CL)
QUAD 18" CL-IV
RCP @ 1.04% SLOPE
TOTAL PURCHASE PIPE LENGTH=220 LF
BEFORE SKEW CUT
C-3
D.S. FL EL. 792.46
14.00 R STA. 0+59.83
GRANTS LANE
DOWNSTREAM END
OF CULVERT

FINISHED GRADE @ ROADWAY CL
EXIST. GRADE @ ROADWAY CL
100 YR STORM HGL
PROP. DITCH FLOWLINE & EDGE OF PAVEMENT ELEVATIONS.
CENTERLINE OF LEFT & RIGHT DITCH @ 17.5' OFFSET FROM ROADWAY CL

| | | |

CULVERT C-3 HEADWALL UPSTREAM

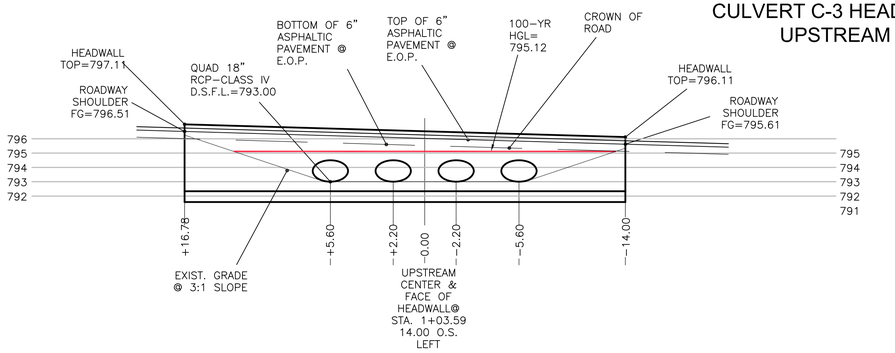

CULVERT C-3 HEADWALL DOWNSTREAM

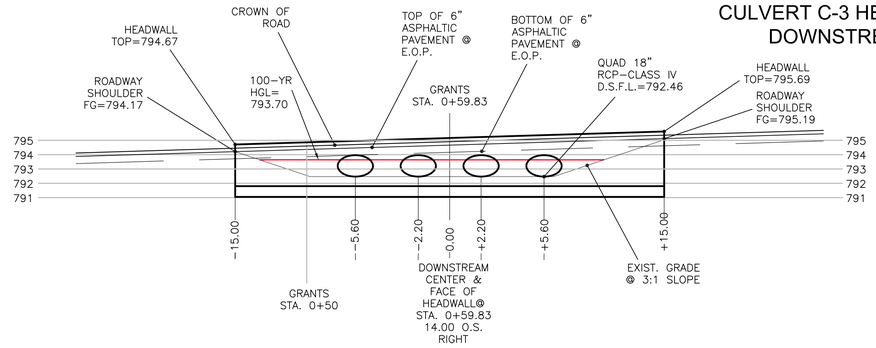

GRANTS LANE REHABILITATION CROSS-SECTIONS

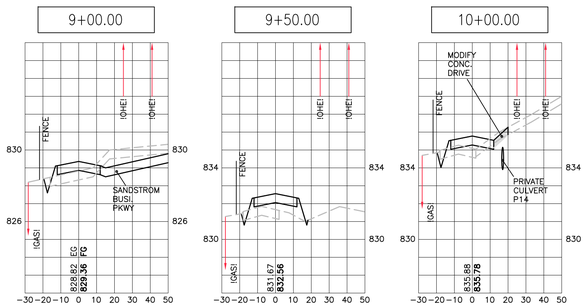

GRANTS LANE REHABILITATION TYPICAL PAVEMENT SECTION

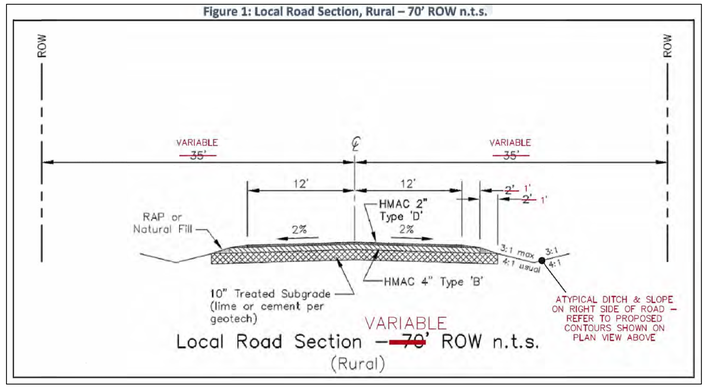

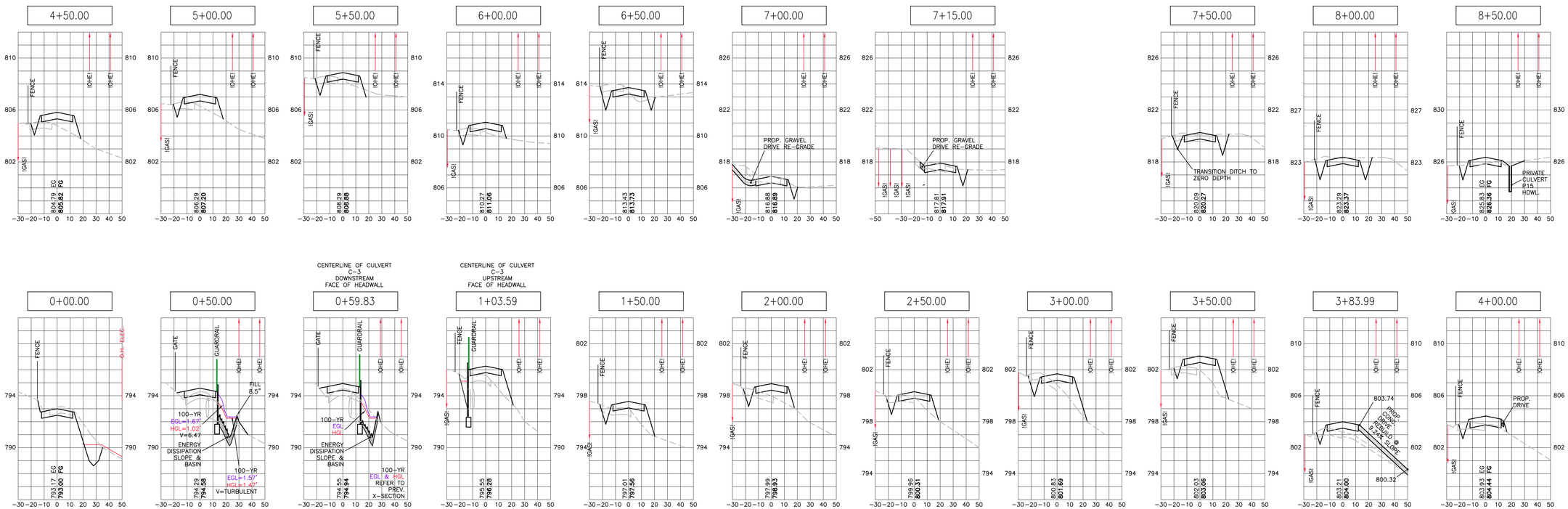

STATE OF TEXAS
JACK R. MEDCALF
46057
LICENSED PROFESSIONAL ENGINEER
4-17-2025

OES, INC.
TEXAS REGISTERED PROFESSIONAL ENGINEERING FIRM F-11001
705 JONES ST.
FORT WORTH, TX 76102
PH. 940.595.0528

SANDSTROM BUSINESS PARK

TARRANT COUNTY, TEXAS

GRANTS LANE CROSS-SECTIONS

PROJECT TECHNICIAN
NJO

JOB NUMBER
1143

SHEET NUMBER
10.3

DISCLAIMER:
The use of this standard is governed by the "Texas Engineering Practice Act". No warranty of any kind is made by TxDOT for any purpose whatsoever. TxDOT assumes no responsibility for the conversion of this standard to other formats or for incorrect results or damages resulting from its use.

DATE:
FILE:

REQUIREMENTS FOR CULVERT PIPES AND SAFETY PIPE RUNNERS

Pipe I.D.	RCP Wall "B" Thickness	TP Wall Thickness (8)	"D" (1)	Slope	Min Length of Unit	Single Pipe Skew	Single Pipe Runners Required	Multiple Pipes Skew	Multiple Pipes Runners Required
12"	2"	1.15"	17.00"	3:1	2' – 11"	≤ 45°	No	≤ 45°	No
				4:1	3' – 6"				
				6:1	4' – 9"				
15"	2 ¼"	1.30"	20.50"	3:1	3' – 8"	≤ 45°	No	≤ 45°	No
				4:1	4' – 7"				
				6:1	6' – 5"				
18"	2 ½"	1.60"	24.00"	3:1	4' – 6"	≤ 45°	No	≤ 45°	No
				4:1	5' – 8"				
				6:1	8' – 0"				
24"	3"	1.95"	31.00"	3:1	6' – 2"	≤ 45°	No	= 30°	No
				4:1	7' – 10"			> 30°	Yes
				6:1	11' – 3"				
30"	3 ½"	2.65"	38.50"	3:1	7' – 10"	= 15°	No	= 15°	No
				4:1	10' – 1"	> 15°	Yes	> 15°	Yes
				6:1	14' – 8"				
36"	4"	2.75"	45.50"	3:1	9' – 5"	= 0°	No	≥ 0°	Yes
				4:1	12' – 3"	> 0°	Yes		
				6:1	17' – 11"				
42"	4 ½"	2.7"	52.50"	3:1	11' – 1"	≥ 0°	Yes	≥ 0°	Yes
				4:1	14' – 5"				
				6:1	21' – 2"				

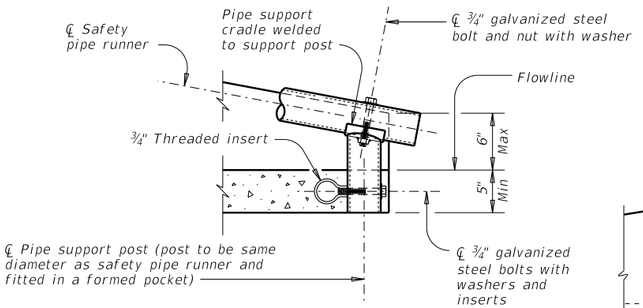

END DETAIL FOR INSTALLATION OF SAFETY PIPE RUNNERS

(If required)

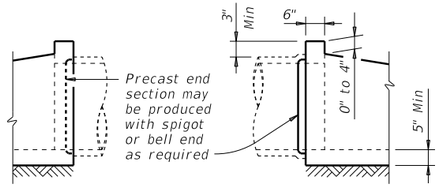

OPTIONAL JOINT FOR RCP

(Showing joint between RCP and precast safety end treatment)

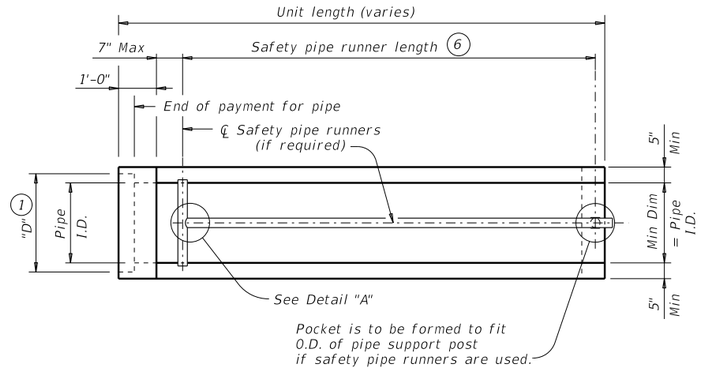

PLAN

(Showing bell end connection.)

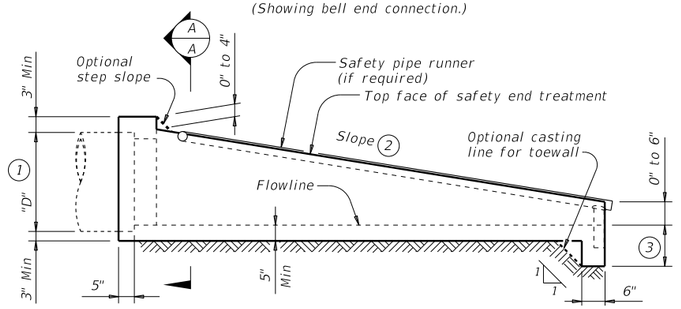

LONGITUDINAL ELEVATION

(Showing bell end connection.)

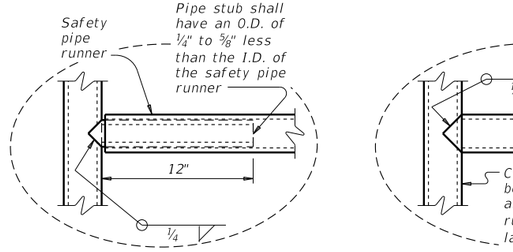

OPTION A

DETAIL A

(If required)

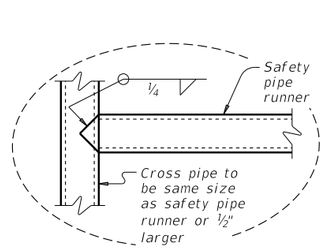

OPTION B

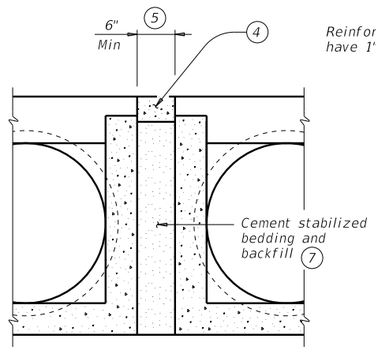

MULTIPLE PIPE INSTALLATION

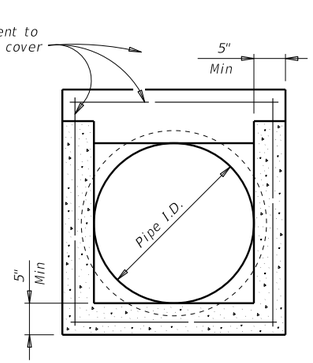

OPTION WITH SQUARE BOTTOM

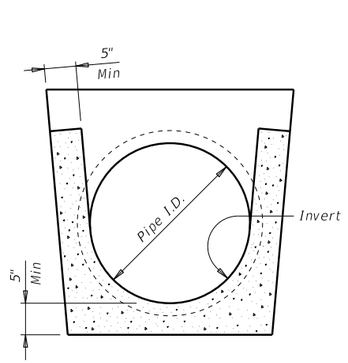

OPTION WITH INVERT BOTTOM

SECTION A-A

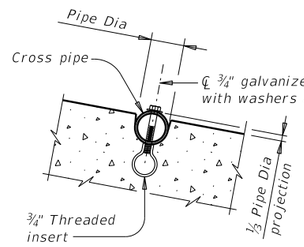

INSTALLATION DETAIL FOR SAFETY PIPE RUNNERS

(If required)

SAFETY PIPE RUNNER DIMENSIONS

Max Safety Pipe Runner Length	Required Pipe Runner Size		
	Pipe Size	Pipe O.D.	Pipe I.D.
11' – 2"	3" STD	3.500"	3.068"
15' – 6"	3 ½" STD	4.000"	3.548"
20' – 10"	4" STD	4.500"	4.026"
35' – 4"	5" STD	5.563"	5.047"

(1) Dimension "D" is based on reinforced concrete pipe (RCP) meeting the requirements of ASTM C-76, Class III, (RCP Wall "B" thickness). Adjust "D" for any other wall thickness used. For thermoplastic pipe (TP) take into account the annular space requirements for grouted connections.

(2) Slope as shown elsewhere in plans. Slope of 3:1 or flatter is required for vehicle safety.

(3) Toewall to be used only when dimension is shown elsewhere in the plans.

(4) Fill the top 4" of void between precast end treatments with concrete riprap. Concrete riprap is considered subsidiary to the Item 467, "Safety End Treatment."

(5) Adjust clear distance between pipes to provide for the minimum distance between safety end treatments.

(6) Measured along slope.

(7) Provide cement stabilized bedding and backfill in accordance with the Item 400, "Excavation and Backfill for Structures." Bedding and backfill is considered subsidiary to the Item 467, "Safety End Treatment." When concrete riprap is specified around the safety end treatment, backfill as directed by Engineer.

(8) Thermoplastic pipe wall thickness may vary. Adjust accordingly. Thermoplastic pipe requires the safety end treatments to have a bell end for grouted connections.

GENERAL NOTES:

Precast safety end treatment for reinforced concrete pipe (RCP), and thermoplastic pipe (TP) may be used for TYPE II end treatment as specified in Item "Safety End Treatment."

When precast safety end treatment is used as a Contractor's alternate to mitered RCP, riprap will not be required unless noted otherwise on the plans.

Synthetic fibers listed on the "Fibers for Concrete" Material Producer List (MPL) may be used in lieu of steel reinforcing in riprap concrete unless noted otherwise.

Manufacture this product in accordance with Item 467, "Safety End Treatment" except as noted below :

A. Provide minimum reinforcing of #4 at 6" (Grade 40) or #4 at 9" (Grade 60) each way or 6"x6" – D12 x D12 or 5"x5" – D10 x D10 welded wire reinforcement (WWR).

B. For precast (steel formed) sections, provide Class "C" concrete (f'c = 3,600 psi).

At the option and expense of the Contractor, the next larger size of safety end treatment may be furnished as long as the "D" dimension cast is that of the required size of pipe.

Pipe runners are designed for a traversing load of 1,800 Lbs at yield as recommended by Research Report 280-1, "Safety Treatment of Roadside Cross-Drainage Structures", Texas Transportation Institute, March 1981.

Provide safety pipe runners, cross pipes, pipe support posts, and pipe stubs meeting the requirements of ASTM A53 (Type E or S, Grade B), ASTM A500 (Grade B), or API 5LX52.

Galvanize all steel components except reinforcing steel after fabrication. Repair galvanizing damaged during transport or construction in accordance with the specifications.

Connect RCP using the Optional Joint for RCP detail shown or in accordance with Item 464 "Reinforced Concrete Pipe." Connect TP by grouting. See Pipe and Box Grouted Connections (PBGC) standard for grouted connections with TP and precast safety end treatment.



Texas Department of Transportation

Bridge Division Standard

PRECAST SAFETY END TREATMENT

TYPE II ~ CROSS DRAINAGE

PSET-SC

FILE: CD-PSET-SC-21.dgn	DN: RLW	CK: KLR	DW: JTR	CK: GAF
©TxDOT February 2020	CONT	SECT	JOB	HIGHWAY
REVISIONS 12-21: Added 42" TP	DIST	COUNTY		SHEET NO.

DISCLAIMER:
The use of this standard is governed by the "Texas Engineering Practice Act". No warranty of any kind is made by TxDOT for any purpose whatsoever. TxDOT assumes no responsibility for the conversion of this standard to other formats or for incorrect results or damages resulting from its use.

DATE:

TABLE OF VARIABLE DIMENSIONS AND QUANTITIES FOR ONE HEADWALL (5)

Slope	Dia of Pipe (D)	15° Skew						30° Skew						45° Skew					
		Values for One Pipe			Values To Be Added for Each Addt'l Pipe			Values for One Pipe			Values To Be Added for Each Addt'l Pipe			Values for One Pipe			Values To Be Added for Each Addt'l Pipe		
		W	Reinf (Lbs) (1)	Conc (CY) (2)	W	Reinf (Lbs) (1)	Conc (CY) (2)	W	Reinf (Lbs) (1)	Conc (CY) (2)	W	Reinf (Lbs) (1)	Conc (CY) (2)	W	Reinf (Lbs) (1)	Conc (CY) (2)	W	Reinf (Lbs) (1)	Conc (CY) (2)
2:1	12"	9' – 4"	124	1.1	1' – 9 3/4"	15	0.2	10' – 5"	130	1.2	2' – 0"	16	0.2	12' – 9"	159	1.5	2' – 5 3/4"	17	0.3
	15"	10' – 7"	136	1.3	2' – 3"	17	0.2	11' – 10"	159	1.5	2' – 6"	18	0.2	14' – 6"	191	1.8	3' – 0 3/4"	20	0.3
	18"	11' – 11"	165	1.5	2' – 9"	19	0.3	13' – 3"	174	1.7	3' – 1"	29	0.3	16' – 3"	207	2.1	3' – 9 1/4"	33	0.4
	21"	13' – 2"	203	1.9	3' – 2 1/4"	31	0.4	14' – 9"	233	2.1	3' – 6 3/4"	33	0.4	18' – 0"	276	2.6	4' – 4 1/4"	36	0.5
	24"	14' – 6"	240	2.1	3' – 8 1/4"	34	0.4	16' – 2"	251	2.4	4' – 1 3/4"	36	0.5	19' – 10"	318	2.9	5' – 0 3/4"	39	0.6
	27"	15' – 9"	258	2.5	4' – 0 3/4"	38	0.5	17' – 7"	292	2.8	4' – 6 1/4"	39	0.6	21' – 7"	342	3.4	5' – 6 1/4"	44	0.7
	30"	17' – 1"	297	2.8	4' – 5 3/4"	40	0.6	19' – 1"	311	3.1	5' – 0"	42	0.6	23' – 4"	388	3.8	6' – 1 3/4"	47	0.8
	33"	18' – 5"	320	3.3	4' – 9 3/4"	43	0.6	20' – 6"	358	3.6	5' – 4 3/4"	46	0.7	25' – 1"	439	4.4	6' – 7 1/4"	51	0.9
	36"	19' – 8"	401	4.0	5' – 3"	47	0.9	21' – 11"	422	4.5	5' – 10 3/4"	50	0.9	26' – 10"	517	5.5	7' – 2 1/4"	55	1.2
	42"	22' – 3"	476	5.0	6' – 0 3/4"	53	1.1	24' – 10"	528	5.6	6' – 8 3/4"	56	1.2	30' – 5"	634	6.9	8' – 3"	76	1.4
	48"	25' – 11"	577	6.6	6' – 9 3/4"	60	1.3	28' – 10"	637	7.3	7' – 7 1/4"	79	1.5	35' – 4"	791	9.0	9' – 3 3/4"	88	1.8
	54"	28' – 6"	711	7.8	7' – 9"	83	1.6	31' – 9"	781	8.7	8' – 8"	81	1.8	38' – 11"	958	10.7	10' – 7 1/4"	97	2.2
	60"	31' – 1"	805	9.2	8' – 6 1/4"	91	1.9	34' – 8"	881	10.2	9' – 6 1/4"	97	2.1	42' – 5"	1,113	12.5	11' – 8"	124	2.6
	66"	33' – 8"	907	10.6	9' – 0 3/4"	98	2.1	37' – 6"	1,028	11.8	10' – 1 1/4"	102	2.4	46' – 0"	1,235	14.5	12' – 4 1/4"	132	2.9
	72"	36' – 3"	1,071	12.1	9' – 8"	105	2.4	40' – 5"	1,207	13.5	10' – 9 1/4"	110	2.6	49' – 6"	1,446	16.6	13' – 2 1/4"	141	3.2
3:1	12"	13' – 6"	178	1.6	1' – 9 3/4"	15	0.2	15' – 0"	189	1.8	2' – 0"	15	0.2	18' – 5"	237	2.2	2' – 5 3/4"	17	0.2
	15"	15' – 3"	212	1.9	2' – 3"	17	0.2	17' – 0"	223	2.1	2' – 6"	17	0.3	20' – 10"	276	2.6	3' – 0 3/4"	20	0.3
	18"	17' – 1"	231	2.3	2' – 9"	19	0.3	19' – 1"	259	2.5	3' – 1"	29	0.3	23' – 4"	318	3.1	3' – 9 1/4"	32	0.4
	21"	18' – 11"	306	2.7	3' – 2 1/4"	31	0.4	21' – 1"	339	3.0	3' – 6 3/4"	33	0.4	25' – 10"	413	3.7	4' – 4 1/4"	36	0.5
	24"	20' – 8"	345	3.1	3' – 8 3/4"	35	0.4	23' – 1"	384	3.5	4' – 1 3/4"	36	0.5	28' – 3"	462	4.2	5' – 0 3/4"	40	0.6
	27"	22' – 6"	376	3.7	4' – 0 3/4"	38	0.5	25' – 1"	438	4.1	4' – 6 1/4"	39	0.6	30' – 9"	522	5.0	5' – 6 1/4"	44	0.7
	30"	24' – 4"	422	4.1	4' – 5 3/4"	40	0.6	27' – 2"	466	4.6	5' – 0"	42	0.6	33' – 3"	578	5.6	6' – 1 3/4"	47	0.8
	33"	26' – 2"	476	4.8	4' – 10"	43	0.6	29' – 2"	522	5.3	5' – 4 3/4"	46	0.7	35' – 9"	644	6.5	6' – 7 1/4"	51	0.9
	36"	27' – 11"	590	5.9	5' – 3"	47	0.8	31' – 2"	645	6.6	5' – 10 3/4"	50	0.9	38' – 2"	787	8.0	7' – 2 1/4"	56	1.2
	42"	31' – 7"	684	7.3	6' – 0 1/4"	53	1.1	35' – 3"	776	8.2	6' – 8 3/4"	56	1.2	43' – 2"	933	10.0	8' – 3"	79	1.4
	48"	36' – 9"	880	9.6	6' – 9 3/4"	61	1.3	41' – 0"	953	10.7	7' – 7 1/4"	81	1.5	50' – 2"	1,166	13.1	9' – 3 3/4"	88	1.8
	54"	40' – 5"	1,065	11.4	7' – 9"	85	1.6	45' – 0"	1,185	12.7	8' – 8"	89	1.8	55' – 2"	1,435	15.5	10' – 7 1/4"	97	2.2
	60"	44' – 0"	1,224	13.3	8' – 6 1/4"	93	1.9	49' – 1"	1,356	14.8	9' – 6 1/4"	96	2.1	60' – 1"	1,635	18.2	11' – 8"	124	2.6
	66"	47' – 7"	1,357	15.4	9' – 1"	98	2.1	53' – 1"	1,497	17.2	10' – 1 1/4"	103	2.3	65' – 1"	1,892	21.1	12' – 4 1/4"	130	2.9
	72"	51' – 3"	1,624	17.7	9' – 8"	105	2.3	57' – 2"	1,787	19.7	10' – 9 1/4"	109	2.6	70' – 0"	2,218	24.1	13' – 2 1/4"	139	3.2
4:1	12"	17' – 7"	232	2.1	1' – 9 3/4"	15	0.2	19' – 8"	259	2.4	2' – 0"	16	0.2	24' – 0"	314	2.9	2' – 5 3/4"	18	0.2
	15"	19' – 11"	272	2.5	2' – 3"	17	0.2	22' – 3"	301	2.8	2' – 6"	18	0.3	27' – 3"	361	3.5	3' – 0 3/4"	21	0.3
	18"	22' – 3"	313	3.0	2' – 9"	19	0.3	24' – 10"	344	3.3	3' – 1"	29	0.3	30' – 5"	427	4.0	3' – 9 1/4"	32	0.4
	21"	24' – 7"	407	3.6	3' – 2 1/4"	31	0.4	27' – 5"	446	4.0	3' – 6 3/4"	33	0.4	33' – 7"	549	4.9	4' – 4 1/4"	36	0.5
	24"	26' – 11"	455	4.1	3' – 8 3/4"	35	0.4	30' – 0"	499	4.5	4' – 1 3/4"	36	0.5	36' – 9"	609	5.6	5' – 0 3/4"	40	0.6
	27"	29' – 3"	514	4.8	4' – 0 3/4"	38	0.5	32' – 7"	562	5.4	4' – 6 1/4"	40	0.6	39' – 11"	703	6.6	5' – 6 1/4"	43	0.7
	30"	31' – 7"	568	5.4	4' – 5 3/4"	40	0.6	35' – 3"	620	6.0	5' – 0"	42	0.6	43' – 2"	768	7.4	6' – 1 3/4"	49	0.8
	33"	33' – 11"	634	6.2	4' – 10"	43	0.7	37' – 10"	710	7.0	5' – 4 3/4"	46	0.7	46' – 4"	848	8.5	6' – 7 1/4"	52	0.9
	36"	36' – 3"	776	7.7	5' – 3"	48	0.9	40' – 5"	868	8.6	5' – 10 3/4"	49	0.9	49' – 6"	1,058	10.6	7' – 2 1/4"	56	1.1
	42"	40' – 11"	921	9.6	6' – 0 1/4"	53	1.0	45' – 7"	1,022	10.7	6' – 8 3/4"	57	1.2	55' – 10"	1,262	13.1	8' – 3"	78	1.4
	48"	47' – 7"	1,152	12.6	6' – 10"	61	1.3	53' – 1"	1,268	14.0	7' – 7 1/4"	80	1.5	65' – 1"	1,587	17.2	9' – 3 3/4"	86	1.8
	54"	52' – 3"	1,416	14.9	7' – 9 1/4"	86	1.6	58' – 4"	1,589	16.6	8' – 8"	89	1.8	71' – 5"	1,924	20.4	10' – 7 1/4"	95	2.2
	60"	56' – 11"	1,606	17.5	8' – 6 3/4"	92	1.9	63' – 6"	1,806	19.5	9' – 6 1/4"	95	2.1	77' – 9"	2,192	23.9	11' – 8"	122	2.6
	66"	61' – 7"	1,819	20.2	9' – 0 3/4"	97	2.1	68' – 8"	2,019	22.5	10' – 1 1/4"	101	2.4	84' – 2"	2,472	27.6	12' – 4 1/4"	131	2.9
	72"	66' – 3"	2,150	23.2	9' – 8"	104	2.4	73' – 11"	2,379	25.9	10' – 9 1/4"	108	2.6	90' – 6"	2,937	31.7	13' – 2 1/4"	138	3.2
6:1	12"	25' – 11"	342	3.1	1' – 9 3/4"	15	0.2	28' – 10"	374	3.5	2' – 0"	16	0.2	35' – 4"	456	4.3	2' – 5 3/4"	17	0.2
	15"	29' – 3"	390	3.7	2' – 3"	17	0.2	32' – 7"	442	4.2	2' – 6"	18	0.2	39' – 11"	549	5.1	3' – 0 3/4"	20	0.3
	18"	32' – 7"	459	4.4	2' – 9"	20	0.3	36' – 4"	515	4.9	3' – 1"	29	0.3	44' – 7"	629	6.0	3' – 9 1/4"	33	0.4
	21"	36' – 0"	608	5.3	3' – 2 1/4"	31	0.4	40' – 2"	660	5.9	3' – 6 3/4"	33	0.4	49' – 2"	823	7.2	4' – 4 1/4"	38	0.5
	24"	39' – 4"	672	6.0	3' – 8 3/4"	35	0.4	43' – 11"	748	6.7	4' – 1 3/4"	36	0.5	53' – 9"	920	8.2	5' – 0 3/4"	42	0.6
	27"	42' – 8"	770	7.1	4' – 0 3/4"	38	0.5	47' – 8"	852	8.0	4' – 6 1/4"	41	0.5	58' – 4"	1,039	9.7	5' – 6 1/4"	45	0.7
	30"	46' – 1"	839	8.0	4' – 5 3/4"	40	0.6	51' – 5"	949	8.9	5' – 0"	44	0.6	62' – 11"	1,162	10.9	6' – 1 3/4"	48	0.8
	33"	49' – 5"	947	9.2	4' – 10"	45	0.7	55' – 2"	1,040	10.3	5' – 4 3/4"	48	0.7	67' – 6"	1,292	12.6	6' – 7 1/4"	50	0.9
	36"	52' – 10"	1,151	11.4	5' – 3"	49	0.8	58' – 11"	1,287	12.7	5' – 10 3/4"	51	1.0	72' – 1"	1,583	15.6	7' – 2 1/4"	55	1.1
	42"	59' – 6"	1,365	14.2	6' – 0 1/4"	55	1.0	66' – 5"	1,530	15.8	6' – 8 3/4"	57	1.2	81' – 4"	1,875	19.4	8' – 3"	76	1.4
	48"	69' – 4"	1,737	18.5	6' – 10"	59	1.3	77' – 4"	1,942	20.7	7' – 7 1/4"	79	1.5	94' – 9"	2,368	25.3	9' – 3 3/4"	86	1.8
	54"	76' – 1"	2,138	22.0	7' – 9 1/4"	83	1.6	84' – 10"	2,378	24.6	8' – 8"	87	1.8	103' – 11"	2,912	30.1	10' – 7 1/4"	95	2.2
	60"	82' – 10"	2,426	25.8	8' – 6 3/4"	90	1.9	92' – 5"	2,681	28.8	9' – 6 1/4"	94	2.1	113' – 2"	3,294	35.3	11' – 8"	122	2.6
	66"	89' – 7"	2,730	29.9	9' – 0 3/4"	96	2.1	99' – 11"	3,038	33.3	10' – 1 1/4"	101	2.4	122' – 4"	3,697	40.8	12' – 4 1/4"	130	2.9
	72"	96' – 3"	3,218	34.2	9' – 8"	102	2.4	107' – 5"	3,580	38.2	10' – 9 1/4"	108	2.6	131' – 6"	4,372	46.8	13' – 2 1/4"	139	3.2

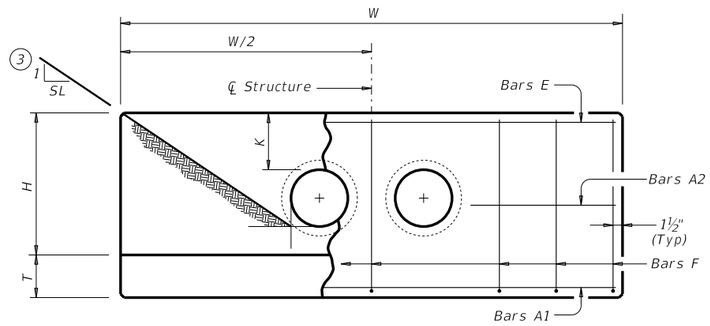

ELEVATION

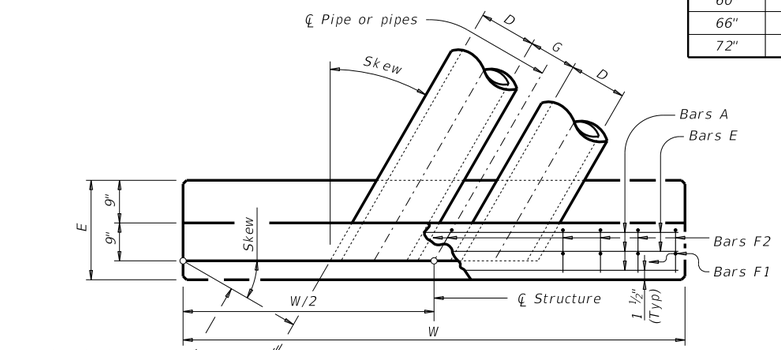

PLAN OF SKEWED PIPES

Showing 30° skew.

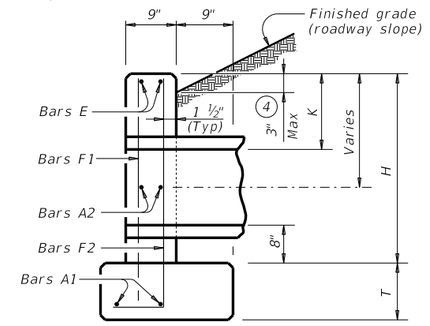

SECTION AT CENTER OF PIPE

TABLE OF CONSTANT DIMENSIONS

Dia of Pipe (D)	G	K (5)	H	T	E
12"	0' – 9"	1' – 0"	2' – 8"	0' – 9"	1' – 9"
15"	0' – 11"	1' – 0"	2' – 11"	0' – 9"	1' – 9"
18"	1' – 2"	1' – 0"	3' – 2"	0' – 9"	1' – 9"
21"	1' – 4"	1' – 0"	3' – 5"	0' – 9"	2' – 0"
24"	1' – 7"	1' – 0"	3' – 8"	0' – 9"	2' – 0"
27"	1' – 8"	1' – 0"	3' – 11"	0' – 9"	2' – 3"
30"	1' – 10"	1' – 0"	4' – 2"	0' – 9"	2' – 3"
33"	1' – 11"	1' – 0"	4' – 5"	0' – 9"	2' – 6"
36"	2' – 1"	1' – 0"	4' – 8"	1' – 0"	2' – 6"
42"	2' – 4"	1' – 0"	5' – 2"	1' – 0"	2' – 9"
48"	2' – 7"	1' – 3"	5' – 11"	1' – 0"	3' – 0"
54"	3' – 0"	1' – 3"	6' – 5"	1' – 0"	3' – 3"
60"	3' – 3"	1' – 3"	6' – 11"	1' – 0"	3' – 6"
66"	3' – 3"	1' – 3"	7' – 5"	1' – 0"	3' – 9"
72"	3' – 4"	1' – 3"	7' – 11"	1' – 0"	4' – 0"

TABLE OF (6) REINFORCING STEEL

Bar	Size	Spa	No.
A1	#5	~	2
A2	#5	1' – 6"	~
E	#5	~	2
F	#5	1' – 0"	~

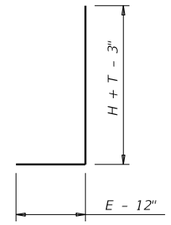

BARS F2

MATERIAL NOTES:
Provide Grade 60 reinforcing steel.
Provide Class C concrete (f'_c = 3,600 psi).

GENERAL NOTES:
Designed according to AASHTO LRFD Bridge Design Specifications.
Do not mount bridge rails of any type directly to these culvert headwalls.
This standard may not be used for wall heights, H, exceeding the values shown.

Cover dimensions are clear dimensions, unless noted otherwise. Reinforcing dimensions are out-to-out of bars.

(1) Total quantities include one 3'-1" lap for bars over 60' in length.

(2) Quantities shown are for concrete pipe and will increase slightly for metal pipe installations.

(3) Indicated slope is perpendicular to centerline pipe or pipes.

(4) For vehicle safety, construct curbs no more than 3" above finished grade. Reduce curb heights, if necessary, to meet these requirements. No changes will be made in quantities and no additional compensation will be allowed for this work.

(5) Dimensions shown are usual and maximum.

(6) Quantities shown are for one structure end only (one headwall).



Texas Department of Transportation

Bridge Division Standard

CONCRETE HEADWALLS WITH PARALLEL WINGS FOR SKEWED PIPE CULVERTS

CH-PW-S

FILE: CD-CH-PWS-20.dgn	DN: TxDOT	CK: TxDOT	DW: TxDOT	CK: TxDOT
©TxDOT February 2020	CONT	SECT	JOB	HIGHWAY
REVISIONS	DIST	COUNTY		SHEET NO.

DISCLAIMER: The use of this standard is governed by the "Texas Engineering Practice Act". No warranty of any kind is made by TxDOT for any purpose whatsoever. TxDOT assumes no responsibility for the conversion of this standard to other formats or for incorrect results or damages resulting from its use.

DATE:
FILE:

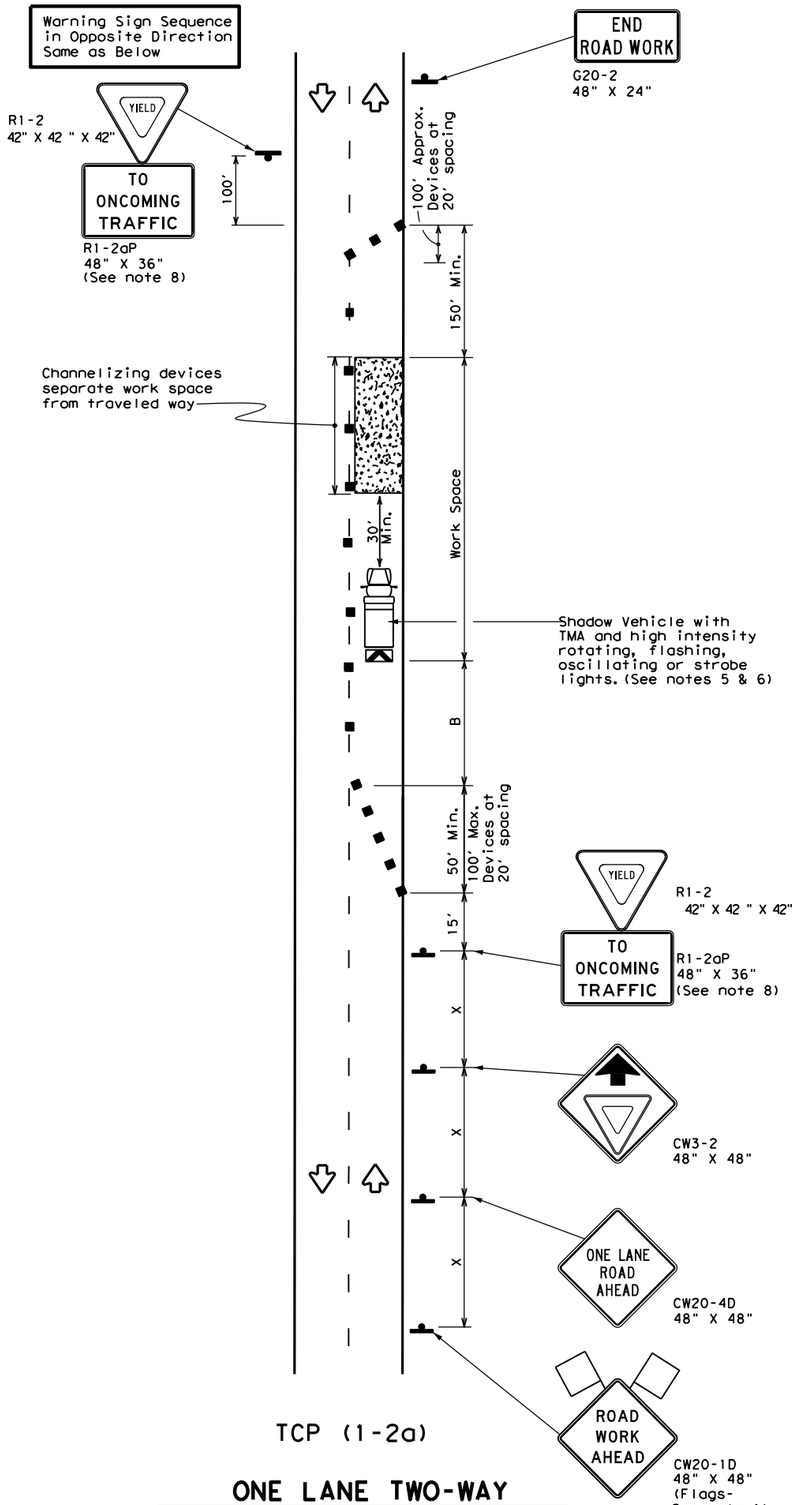

TCP (1-2a)

ONE LANE TWO-WAY CONTROL WITH YIELD SIGNS

(Less than 2000 ADT - See note 7)

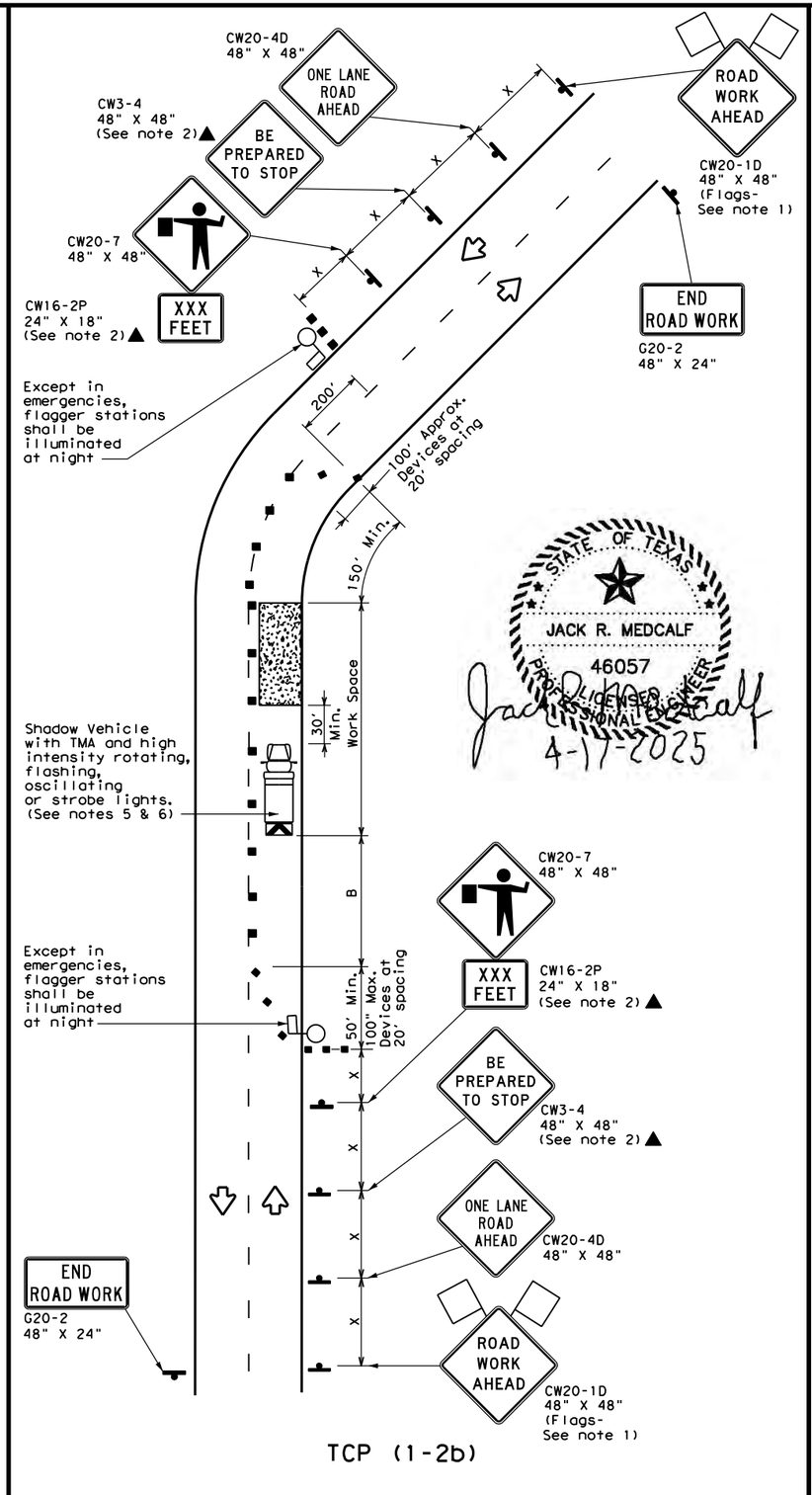

TCP (1-2b)

ONE LANE TWO-WAY CONTROL WITH FLAGGERS

LEGEND			
	Type 3 Barricade		Channelizing Devices
	Heavy Work Vehicle		Truck Mounted Attenuator (TMA)
	Trailer Mounted Flashing Arrow Board	M	Portable Changeable Message Sign (PCMS)
	Sign		Traffic Flow
	Flag		Flagger

Posted Speed *	Formula	Minimum Desirable Taper Lengths ** 10' Offset	11' Offset	12' Offset	Suggested Maximum Spacing of Channelizing Devices On a Taper	On a Tangent	Minimum Sign Spacing "X" Distance	Suggested Longitudinal Buffer Space "B"	Stopping Sight Distance
30	$L = \frac{WS^2}{60}$	150'	165'	180'	30'	60'	120'	90'	200'
35		205'	225'	245'	35'	70'	160'	120'	250'
40		265'	295'	320'	40'	80'	240'	155'	305'
45	L = WS	450'	495'	540'	45'	90'	320'	195'	360'
50		500'	550'	600'	50'	100'	400'	240'	425'
55		550'	605'	660'	55'	110'	500'	295'	495'
60		600'	660'	720'	60'	120'	600'	350'	570'
65		650'	715'	780'	65'	130'	700'	410'	645'
70		700'	770'	840'	70'	140'	800'	475'	730'
75		750'	825'	900'	75'	150'	900'	540'	820'

* Conventional Roads Only

** Taper lengths have been rounded off.
L=Length of Taper(FT) W=Width of Offset(FT) S=Posted Speed(MPH)

TYPICAL USAGE				
MOBILE	SHORT DURATION	SHORT TERM STATIONARY	INTERMEDIATE TERM STATIONARY	LONG TERM STATIONARY
	✓	✓		

STATE OF TEXAS
JACK R. MEDCALF
46057
LICENSED PROFESSIONAL ENGINEER
4-17-2025

GENERAL NOTES

1. Flags attached to signs where shown are REQUIRED.
2. All traffic control devices illustrated are REQUIRED, except those denoted with the triangle symbol may be omitted when stated elsewhere in the plans, or for routine maintenance work, when approved by the Engineer.
3. The CW3-4 "BE PREPARED TO STOP" sign may be installed after the CW20-4D "ONE LANE ROAD AHEAD" sign, but proper sign spacing shall be maintained.
4. Sign spacing may be increased or an additional CW20-1D "ROAD WORK AHEAD" sign may be used if advance warning ahead of the flagger or R1-2 "YIELD" sign is less than 1500 feet.
5. A Shadow Vehicle with a TMA should be used anytime it can be positioned 30 to 100 feet in advance of the area of crew exposure without adversely affecting the performance or quality of the work. If workers are no longer present but road or work conditions require the traffic control to remain in place, Type 3 Barricades or other channelizing devices may be substituted for the Shadow Vehicle and TMA.
6. Additional Shadow Vehicles with TMAs may be positioned off the paved surface, next to those shown in order to protect wider work spaces.

TCP (1-2a)

7. R1-2 "YIELD" sign traffic control may be used on projects with approaches that have adequate sight distance. For projects in urban areas, work spaces should be no longer than one half city block. In rural areas on roadways with less than 2000 ADT, work spaces should be no longer than 400 feet.
8. R1-2 "YIELD" sign with R1-2aP "TO ONCOMING TRAFFIC" plaque shall be placed on a support at a 7 foot minimum mounting height.

TCP (1-2b)

9. Flaggers should use two-way radios or other methods of communication to control traffic.
10. Length of work space should be based on the ability of flaggers to communicate.
11. If the work space is located near a horizontal or vertical curve, the buffer distances should be increased in order to maintain adequate stopping sight distance to the flagger and a queue of stopped vehicles (see table above).
12. Channelizing devices on the center-line may be omitted when a pilot car is leading traffic and approved by the Engineer.
13. Flaggers should use 24" STOP/SLOW paddles to control traffic. Flags should be limited to emergency situations.

For construction or maintenance contract work, specific project requirements for shadow vehicles can be found in the project GENERAL NOTES for Item 502, Barricades, Signs and Traffic Handling.

Texas Department of Transportation
Traffic Operations Division

TRAFFIC CONTROL PLAN ONE-LANE TWO-WAY TRAFFIC CONTROL

TCP(1-2)-12

©TxDOT December 1985

DN: TXDOT	CK: TXDOT	DW: TXDOT	CK: TXDOT

REVISIONS	CONT	SECT	JOB	HIGHWAY
4-90 2-12				
2-94	DIST	COUNTY		SHEET NO.
1-97				
4-98				

DISCLAIMER:
THE USE OF THIS STANDARD IS GOVERNED BY THE "TEXAS ENGINEERING PRACTICE ACT". NO WARRANTY OF ANY KIND IS MADE BY TXDOT FOR ANY PURPOSE WHATSOEVER. TXDOT ASSUMES NO RESPONSIBILITY FOR THE CONVERSION OF THIS STANDARD TO OTHER FORMATS OR FOR INCORRECT RESULTS OR DAMAGES RESULTING FROM ITS USE.

DATE:
FILE:

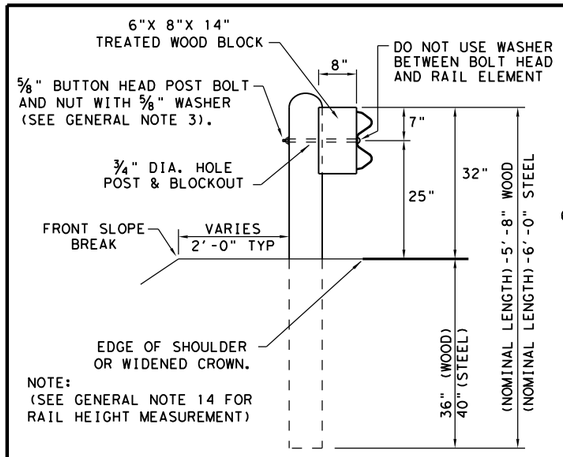

TYPICAL POST PLACEMENT

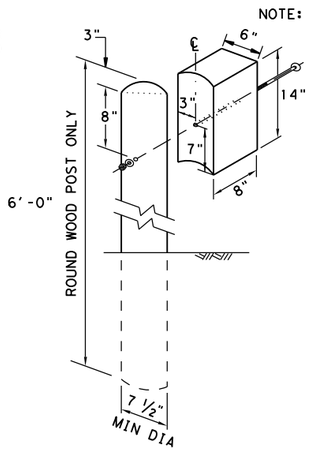

WOOD BLOCK TO ROUND WOOD POST

NOTE: TOENAIL WITH ONE 16D GALV. NAIL TO PREVENT BLOCK ROTATION.

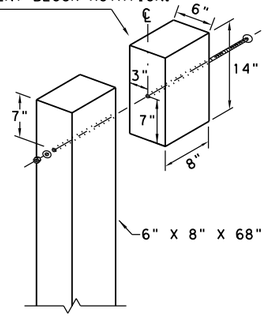

WOOD BLOCK TO RECTANGULAR WOOD POST

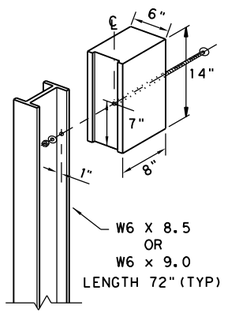

ROUTED WOOD BLOCK TO I-BEAM STEEL POST

NOTE: ** "WOOD" INDICATES DIMENSIONS FOR BOTH ROUND AND RECTANGULAR WOOD POST SYSTEMS.

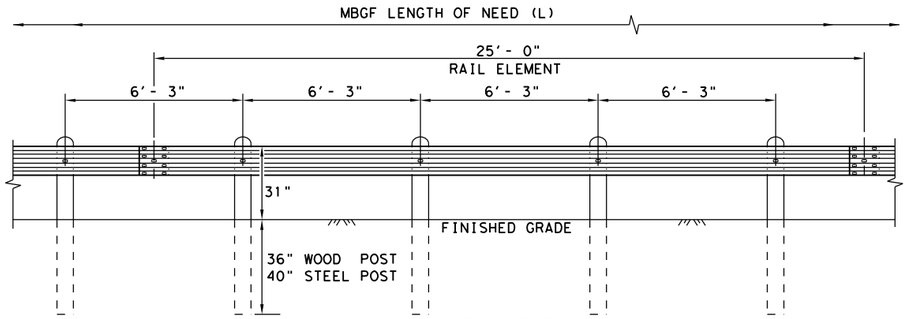

ELEVATION MID-SPAN RAIL SPLICE

SHOWING A 25'- 0" SECTION OF W-BEAM RAIL. (SEE GENERAL NOTE 2)

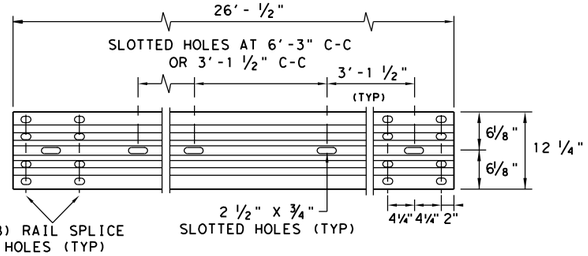

ELEVATION 25'- 0" (NOM.) W-BEAM SECTION

NOTES: SEE GENERAL NOTE 2 FOR ALLOWABLE RAIL TYPES.
SEE RAIL SPLICE DETAIL FOR REQUIRED HARDWARE.

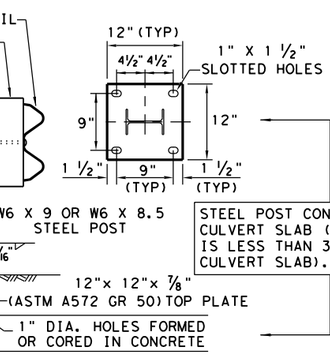

LOW FILL CULVERT POST

STEEL POST CONNECTION TO CULVERT SLAB (USE WHEN THERE IS LESS THAN 36" COVER OVER CULVERT SLAB).

NOTE: TWO INSTALLATION OPTIONS.

1. BOLT-THROUGH OPTION: REQUIRES A 6" MIN. SLAB THICKNESS. ⅞" DIA (ASTM A449) HEAVY HEX BOLTS WITH TWO HARDENED WASHER EACH AND HEAVY HEX NUTS.
   NOTE: BOLT LENGTH = SLAB PLUS 2 ¼" MIN.

2. EPOXY ANCHOR OPTION: THIS OPTION MAY ONLY BE USED IF THE CULVERT SLAB IS 9" MIN. THICK. THREADED ANCHOR RODS MUST BE ⅞" DIA. ASTM A449 OR A193 GRADE B7 WITH HEAVY HEX NUT, AND ONE HARDENED WASHER EACH. EMBED ANCHOR RODS 6" WITH HILTI HIT RE 500 EPOXY ADHESIVE. OTHER TYPE III CLASS C EPOXY ADHESIVES MEETING THE REQUIREMENTS OF DMS-6100, "EPOXIES AND ADHESIVES", MAY BE USED IF IT CAN BE DEMONSTRATED THAT THEY MEET OR EXCEED THE STRENGTH OF HILTI HIT RE 500 WITH THE SAME EMBEDMENT DEPTH AND THREADED ROD DIA. FOLLOW THE MANUFACTURER'S REQUIREMENTS FOR INSTALLING EPOXIED THREADED RODS. EXTEND RODS ¼" MIN. BEYOND NUT.

NOTE: CULVERTS OF 25 FT. OR LESS, SEE GF(31)LS STANDARD FOR "LONG SPAN" OPTION.

NOTE: TRANSISTIONS TO BRIDGE RAILS OR TRAFFIC BARRIERS.
SEE GF(31)TL3 TR STANDARD FOR HIGH-SPEED TL-3 TRANSITIONS.
SEE GF(31)TL2 TR STANDARD FOR LOW-SPEED TL-2 TRANSITIONS.

NOTE:
FOUR TYPES OF BUTTON-HEAD GUARD RAIL BOLTS COME WITH A RECCESSED NUT.

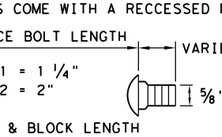

BUTTON HEAD BOLT

NOTE: SEE GENERAL NOTE 3 FOR SPLICE & POST BOLT DETAILS.

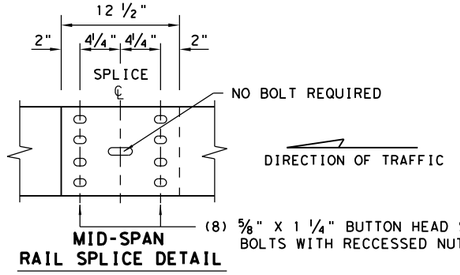

MID-SPAN RAIL SPLICE DETAIL

NOTE: GF(31), MID-SPAN RAIL SPLICES ARE REQUIRED WITH 6'-3" POST SPACINGS.

GENERAL NOTES

1. THE TYPE OF POST (ROUND WOOD POST, RECTANGULAR WOOD POST, OR STEEL POST) WILL BE AS SHOWN IN THE PLANS. THE EXACT POSITION OF MBGF SHALL BE SHOWN IN THE PLANS OR AS DIRECTED BY THE ENGINEER. STEEL POSTS TO BE GALVANIZED IN ACCORDANCE WITH ITEM 445, "GALVANIZING."
2. RAIL ELEMENTS SHALL MEET THE REQUIREMENTS OF ITEM 540, "METAL BEAM GUARD FENCE" EXCEPT AS MODIFIED IN THE PLANS. THE CONTRACTOR MAY FURNISH RAIL ELEMENTS OF 25'- 0", OR 12'- 6" (NOM.) LENGTHS. RAIL ELEMENTS MAY HAVE SLOTTED HOLES AT 3'-1 ½" C-C OR 6'-3" C-C. A SPECIAL LENGTH OF RAIL MAY BE MANUFACTURED TO ACCOMMODATE THE DOWNSTREAM ANCHOR TERMINAL (DAT) AND THE TRANSITION SECTIONS OF GUARDRAIL.
3. BUTTON HEAD "POST BOLTS & NUTS" SHALL MEET THE REQUIREMENTS OF (ASTM A307), AND SHALL BE OF SUFFICIENT LENGTH TO EXTEND THROUGH THE FULL THICKNESS OF THE NUT AND ⅝" WASHER (FWC16a) AND NOT MORE THAN 1" BEYOND IT. TRIM REMAINING BOLT LENGTH TO MEET REQUIRED LENGTH.
4. FITTINGS (BOLTS, NUTS, AND WASHERS) SHALL BE GALVANIZED IN ACCORDANCE WITH ITEM 445, "GALVANIZING." FITTINGS SHALL BE SUBSIDIARY TO THE BID ITEM.
5. CROWN SHALL BE WIDENED TO ACCOMMODATE THE METAL BEAM GUARD FENCE.
6. THE LATERAL APPROACH TO THE GUARD FENCE, SHALL HAVE A MAXIMUM SLOPE OF 1V:10H.
7. IF SHOWN ELSEWHERE IN THE PLANS OR AS DIRECTED BY THE ENGINEER, THE GUARD FENCE MAY BE FLARED AT A RATE OF 25:1 OR FLATTER.
8. UNLESS OTHERWISE SHOWN IN THE PLANS, GUARD FENCE PLACED IN THE VICINITY OF CURBS SHALL BE POSITIONED SO THAT THE FACE OF CURB IS LOCATED DIRECTLY BELOW OR BEHIND THE FACE OF THE RAIL. RAIL PLACED OVER CURBS SHALL BE INSTALLED SO THAT THE POST BOLT IS LOCATED APPROXIMATELY 25 INCHES ABOVE THE GUTTER PAN OR EDGE OF SHOULDER.
9. APPLICATIONS IN SOLID ROCK ARE ONLY ALLOWED WITH STEEL POSTS. IF SOLID ROCK IS ENCOUNTERED WITHIN 0 TO 18" OF THE FINISHED GRADE, DRILL A 24" DIA. HOLE, 24" INTO THE ROCK. IF SOLID ROCK IS ENCOUNTERED BELOW 18", DRILL A 12" DIA. HOLE, 12" INTO THE ROCK OR TO THE STANDARD EMBEDMENT DEPTH, WHICHEVER MAYBE LESS. ANY EXCESS POST LENGTH, AFTER MEETING THESE DEPTHS, MAY BE FIELD CUT TO ENSURE PROPER GUARDRAIL MOUNTING HEIGHT. BACKFILL WITH COARSE AGGREGATE MATERIAL.
10. POSTS SHALL NOT BE SET IN CONCRETE, OF ANY DEPTH.
11. SPECIAL FABRICATION WILL BE REQUIRED AT INSTALLATION LOCATIONS HAVING A CURVATURE OF LESS THAN 150 FT. RADIUS.
12. UNLESS OTHERWISE SHOWN IN THE PLANS, A COMPOSITE MATERIAL BLOCK THAT MEETS THE REQUIREMENTS OF DMS-7210, "COMPOSITE MATERIAL POSTS AND BLOCKS FOR METAL BEAM GUARD FENCE" MAY BE SUBSTITUTED FOR BLOCKS OF SIMILAR DIMENSIONS. THE CONSTRUCTION DIVISION, TXDOT MAINTAINS A MATERIAL PRODUCER LIST (MPL) FOR PRODUCERS OF MATERIALS CONFORMING TO DMS-7210 ONLY PRODUCERS ON THE MPL MAY FURNISH COMPOSITE MATERIAL BLOCKS.
13. FOR THE LOW FILL CULVERT OPTION, POSTS LOCATED PARTIALLY OR WHOLLY BETWEEN PRECAST BOX CULVERT UNITS, THE USE OF A CAST-IN-PLACE CONCRETE CLOSURE BETWEEN BOXES IS REQUIRED. THE LENGTH OF THE CAST-IN-PLACE CONCRETE CLOSURE SHALL ACCOMMODATE THE PLACEMENT OF THE LOW FILL CULVERT OPTION. SEE CONCRETE CLOSURE DETAILS ON BRIDGE STANDARD SCP-MD.
14. GUARDRAIL HEIGHT MEASUREMENT: WHEN THE GUARDRAIL IS LOCATED ABOVE PAVEMENT, MEASURE THE HEIGHT FROM THE PAVEMENT TO THE TOP OF THE W-BEAM RAIL. WHEN THE GUARDRAIL IS LOCATED UP TO 2 FT. OFF OF THE EDGE OF PAVEMENT OR FOR A PAVEMENT OVERLAY, USE A 10-FOOT STRAIGHTEDGE TO EXTEND THE PAVEMENT/SHOULDER SLOPE TO THE BACK OF RAIL, MEASURE FROM THE BOTTOM OF STRAIGHTEDGE TO THE TOP OF RAIL. FOR GUARDRAIL LOCATED DOWN A 10:1 SLOPE, MEASURE FROM THE NOMINAL TERRAIN.

STATE OF TEXAS
JACK R. MEDCALF
46057
LICENSED PROFESSIONAL ENGINEER
4-17-2025

DIRECTION OF TRAFFIC

Texas Department of Transportation

Design Division Standard

METAL BEAM GUARD FENCE
TL-3 MASH COMPLIANT
GF(31)-19

FILE: gf3119.dgn	DN: TxDOT	CK: KM	DW: VP	CK: CGL/AG
©TxDOT: NOVEMBER 2019	CONT	SECT	JOB	HIGHWAY
REVISIONS				
	DIST	COUNTY		SHEET NO.

DISCLAIMER:
THE USE OF THIS STANDARD IS GOVERNED BY THE "TEXAS ENGINEERING PRACTICE ACT". NO WARRANTY OF ANY KIND IS MADE BY TXDOT FOR ANY PURPOSE WHATSOEVER. TXDOT ASSUMES NO RESPONSIBILITY FOR THE CONVERSION OF THIS STANDARD TO OTHER FORMATS OR FOR INCORRECT RESULTS OR DAMAGES RESULTING FROM ITS USE.

DATE:
FILE:

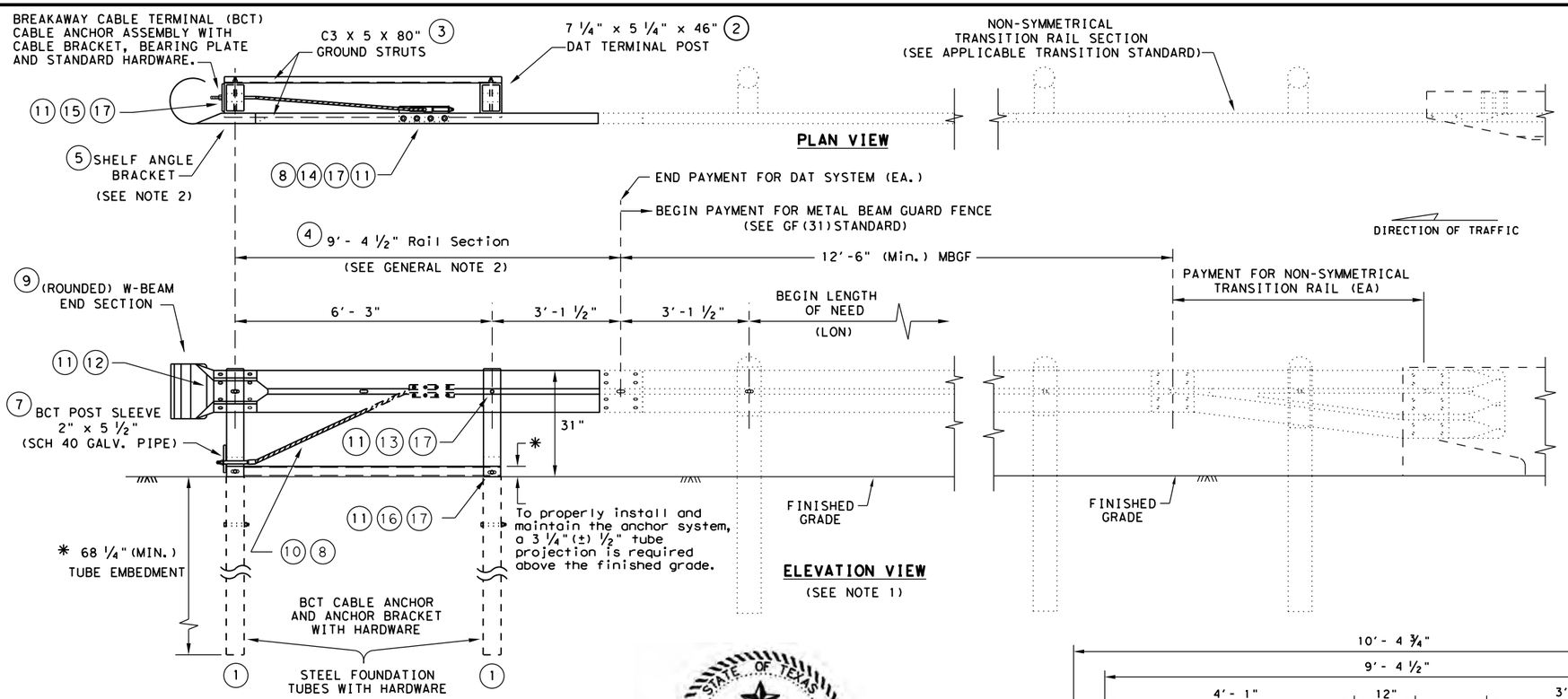

DOWNSTREAM ANCHOR TERMINAL (DAT)

NOTE: ONLY FOR DOWNSTREAM USE, WHEN LOCATED OUTSIDE THE HORIZONTAL CLEARANCE AREA OF OPPOSING TRAFFIC.



GENERAL NOTES

1. THE DETAIL SHOWN IS THE MINIMUM LENGTH OF NEED (LON) FOR A DOWNSTREAM ANCHOR TERMINAL (DAT) CONNECTED TO A CONCRETE RAIL.
2. THE RAIL SECTION AT THE END POST IS SUPPORTED BY THE SHELF ANGLE BRACKET. THE RAIL ELEMENT IS NOT ATTACHED TO THE END POST.
3. THE FOUNDATION TUBES SHALL NOT PROJECT MORE THAN 3 3/4" ABOVE THE FINISHED GRADE.
4. ALL HARDWARE FOR DAT SHALL BE ASTM A307 UNLESS OTHERWISE SHOWN.
5. REFER TO GF(31) SHEET FOR TERMINAL CONNECTION DETAILS.

MOW STRIP INSTALLATION

IF A MOW STRIP IS REQUIRED WITH THE DAT INSTALLATION THE LEAVE-OUT AREA AROUND THE STEEL FOUNDATION TUBES AND THE TWO CHANNEL STRUTS MAY BE OMITTED. THIS WILL REQUIRE A FULL POUR AT THE FOUNDATION TUBES.

#	(DAT) PARTS LIST	QTY
(1)	STEEL FOUNDATION TUBE	2
(2)	DAT TERMINAL POST	2
(3)	CHANNEL STRUT	2
(4)	TERMINAL RAIL ELEMENT	1
(5)	SHELF ANGLE BRACKET	1
(6)	BCT BEARING PLATE	1
(7)	BCT POST SLEEVE	1
(8)	GUARDRAIL ANCHOR BRACKET	1
(9)	(ROUNDED)W-BEAM END SECTION	1
(10)	BCT CABLE ANCHOR	1
(11)	RECESSED NUT, GUARDRAIL	20
(12)	1 1/4" BUTTON HEAD BOLT	4
(13)	10" BUTTON HEAD BOLT	2
(14)	5/8" X 2" HEX HEAD BOLT	8
(15)	5/8" X 8" HEX HEAD BOLT	4
(16)	5/8" X 10" HEX HEAD BOLT	2
(17)	5/8" FLAT WASHER	18

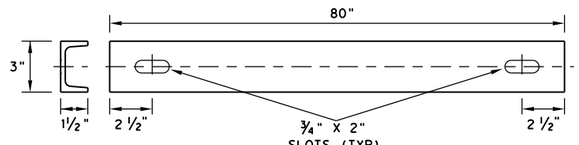

(3) **CHANNEL STRUT**
C3 X 5 X 80", GRADE A36

(4) **TERMINAL RAIL ELEMENT FOR DAT**

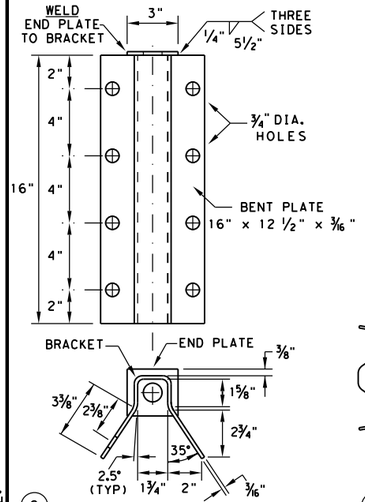

(8) **GUARDRAIL ANCHOR BRACKET**

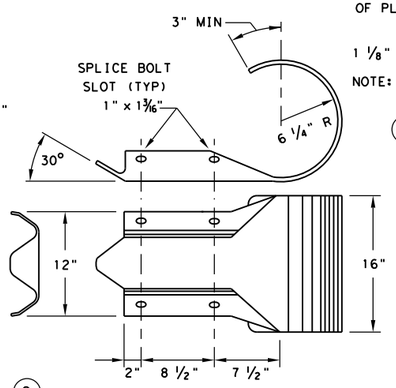

(9) **W-BEAM END SECTION (ROUNDED) (12 GA.)**

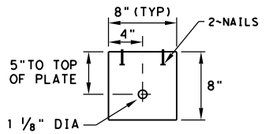

NOTE: DRIVE NAILS AND BEND OVER TO PREVENT PLATE ROTATION

(6) **BEARING PLATE**
8"x 8"x 5/8" PL

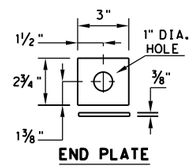

END PLATE

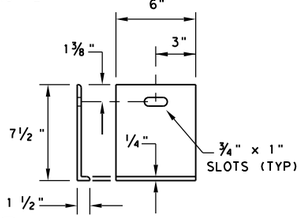

(5) **SHELF ANGLE BRACKET**

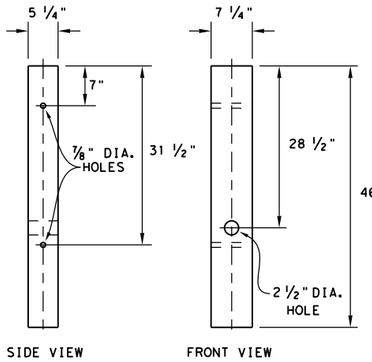

(2) **TERMINAL POST**
7 1/4"x 5 1/4"x 46" WOOD POST

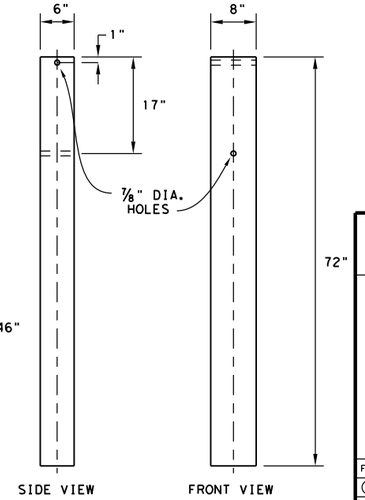

(1) **STEEL FOUNDATION TUBE**
6"x 8"x 1/8" x 72" STEEL TUBE

Texas Department of Transportation — Design Division Standard

METAL BEAM GUARD FENCE
(DOWNSTREAM ANCHOR TERMINAL)
TL-3 MASH COMPLIANT
GF(31)DAT-19

FILE: gf31dat19.dgn	DN: TxDOT	CK: KM	DW: VP	CK: CGL/AG
©TxDOT: NOVEMBER 2019	CONT	SECT	JOB	HIGHWAY
REVISIONS				
	DIST	COUNTY		SHEET NO.

DISCLAIMER:
THE USE OF THIS STANDARD IS GOVERNED BY THE "TEXAS ENGINEERING PRACTICE ACT". NO WARRANTY OF ANY KIND IS MADE BY TXDOT FOR ANY PURPOSE WHATSOEVER. TXDOT ASSUMES NO RESPONSIBILITY FOR THE CONVERSIONOF THIS STANDARD TO OTHER FORMATS OR FOR INCORRECT RESULTS OR DAMAGES RESULTING FROM ITS USE.

DATE:
FILE:

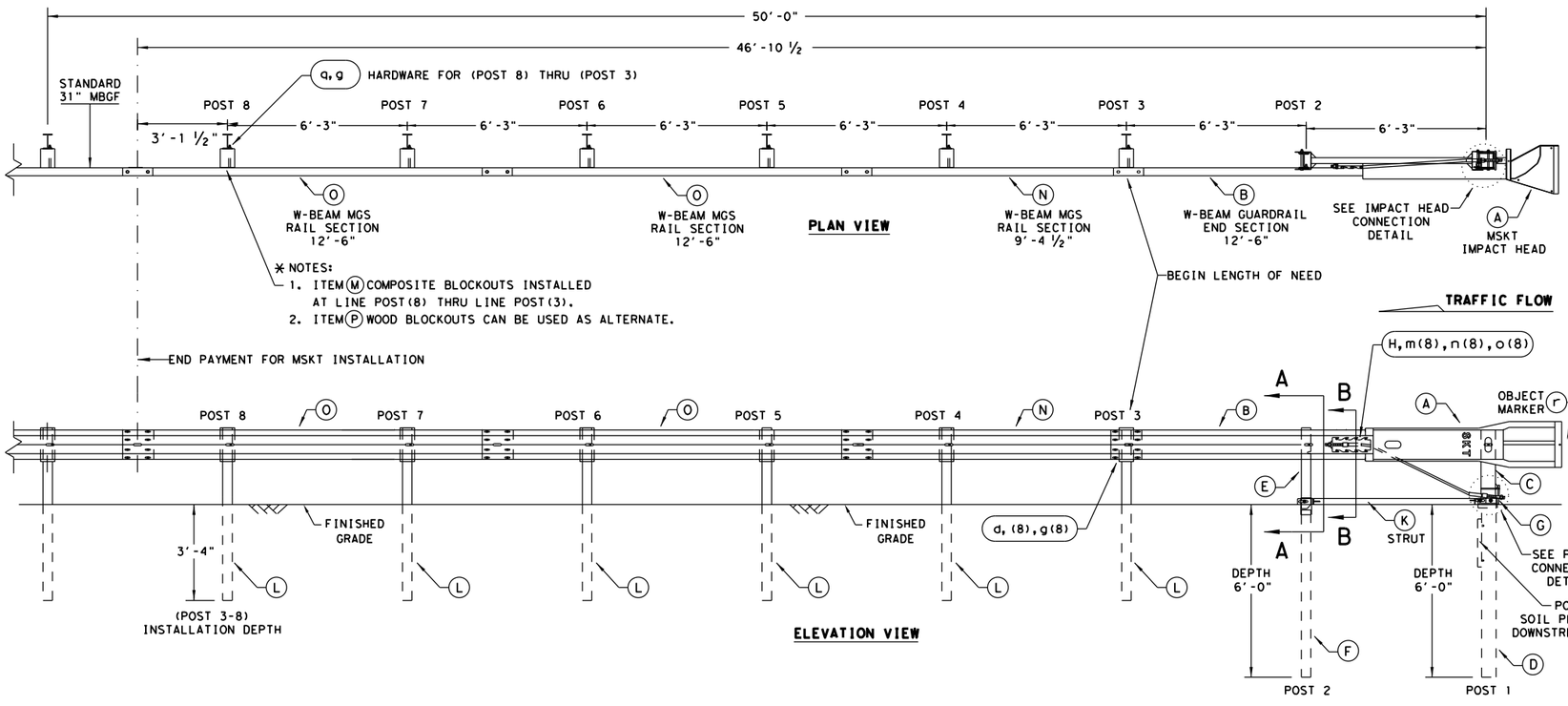

NOTE: SEE (GENERAL NOTE 14) FOR DRIVING CAP INFORMATION.

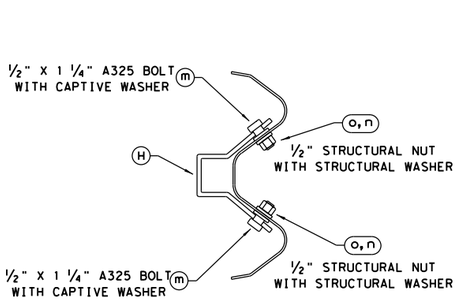

SECTION B-B
ANCHOR BRACKET

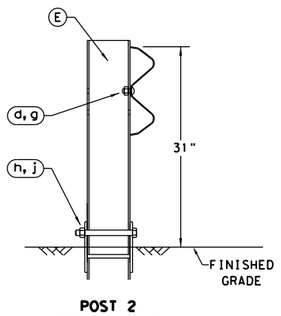

POST 2
SECTION A-A

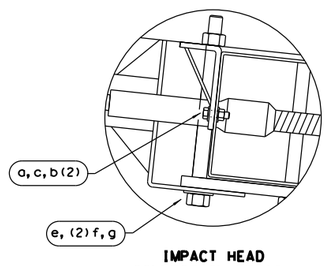

IMPACT HEAD
CONNECTION DETAIL

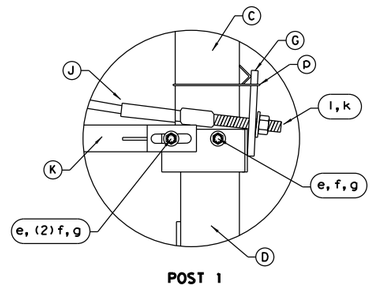

POST 1
CONNECTION DETAIL

GENERAL NOTES

1. FOR SPECIFIC INFORMATION REGARDING INSTALLATION AND TECHNICAL GUIDANCE OF THE SYSTEM, CONTACT: ROAD SYSTEMS, INC. (432)263-2435. 3616 OLD HOWARD COUNTY AIRPORT, BIG SPRING, TX 79720
2. FOR INSTALLATION, REPAIR AND MAINTENANCE REFER TO THE; MSKT END TERMINAL, PRODUCT DESCRIPTION ASSEMBLY MANUAL (PUBLICATION~062717).
3. APPLY HIGH INTENSITY REFLECTIVE SHEETING, "OBJECT MARKER" ON THE FRONT FACE OF THE DEVICE PER MANUFACTURER'S RECOMMENDATIONS. OBJECT MARKER SHALL CONFORM TO THE STANDARDS REQUIRED IN TEXAS MUTCD.
4. FOR POST (LEAVE-OUT) INSTALLATION AND GUIDANCE SEE TXDOT'S LATEST ROADWAY MOW STRIP STANDARD.
5. HARDWARE (BOLTS, NUTS, & WASHERS) SHALL BE GALVANIZED IN ACCORDANCE WITH ITEM 445, "GALVANIZING". FITTINGS SHALL BE SUBSIDIARY TO THE BID ITEM.
6. SYSTEM SHOWN USING STEEL WIDE FLANGE POSTS WITH COMPOSITE BLOCKOUTS.
7. A COMPOSITE MATERIAL BLOCKOUTS THAT MEETS THE REQUIREMENTS OF DMS-7210, MAY BE SUBSTITUTED FOR BLOCKOUTS OF SIMILAR DIMENSIONS. SEE CONSTRUCTION DIVISION MATERIAL PRODUCER LIST (MPL) FOR CERTIFIED PRODUCERS.
8. IF SOLID ROCK IS ENCOUNTERED IN THE AREA OF (POST 1) AND / OR (POST 2) CONTACT THE MANUFACTURER, & REFER TO THE LATEST ROADWAY MBGF STANDARD FOR INSTALLATION GUIDANCE.
9. POSTS SHALL NOT BE SET IN CONCRETE.
10. SYSTEM MUST BE ATTACHED TO STANDARD 31" MBGF.
11. UNDER NO CIRCUMSTANCES SHALL THE GUARDRAIL WITHIN THE MSKT SYSTEM BE CURVED.
12. A FLARE RATE OF UP TO 25:1 MAY BE USED TO PREVENT THE TERMINAL HEAD FROM ENCROACHING ON THE SHOULDER. THE FLARE MAY BE DECREASED OR ELIMINATED FOR SPECIFIC INSTALLATIONS, IF DIRECTED BY THE ENGINEER.
13. THE SYSTEM IS SHOWN WITH TWO 12'-6" MBGF PANELS, ONE 25'-0" MBGF PANEL IS ALSO ALLOWED IN THEIR PLACE.
14. A DRIVING CAP WITH A TIMBER OR PLASTIC INSERT SHALL BE USED WHEN DRIVING POSTS 3-8 TO PREVENT DAMAGE TO THE GALVANIZING ON TOP OF THE POST. SPECIAL DRIVING CAP TO BE USED ON LOWER POSTS 1 & 2 TO PREVENT DAMAGE TO THE WELDED PLATES.

ITEM	QTY	MAIN SYSTEM COMPONENTS	ITEM NUMBERS
A	1	MSKT IMPACT HEAD	MS3000
B	1	W-BEAM GUARDRAIL END SECTION, 12 Ga.	SF1303
C	1	POST 1 - TOP (6" X 6" X 1/8" TUBE)	MTPHP1A
D	1	POST 1 - BOTTOM (6' W6X15)	MTPHP1B
E	1	POST 2 - ASSEMBLY TOP	UHP2A
F	1	POST 2 - ASSEMBLY BOTTOM (6' W6X9)	HP2B
G	1	BEARING PLATE	E750
H	1	CABLE ANCHOR BOX	S760
J	1	BCT CABLE ANCHOR ASSEMBLY	E770
K	1	GROUND STRUT	MS785
L	6	W6x9 OR W6x8.5 STEEL POST	P621
M	6	COMPOSITE BLOCKOUTS	CBSP-14
N	1	W-BEAM MGS RAIL SECTION (9'-4 1/2")	G12025
O	2	W-BEAM MGS RAIL SECTION (12'-6")	G1203A
P	6	WOOD BLOCKOUT 6" X 8" X 14"	P675
Q	1	W-BEAM MGS RAIL SECTION (25'-0")	G1209
		SMALL HARDWARE	
a	2	5/16" x 1" HEX BOLT (GRD 5)	B5160104A
b	4	5/16" WASHER	W0516
c	2	5/16" HEX NUT	N0516
d	25	5/8" Dia. x 1 1/4" SPLICE BOLT (POST 2)	B580122
e	2	5/8" Dia. x 9" HEX BOLT (GRD A449)	B580904A
f	3	5/8" WASHER	W050
g	33	5/8" Dia. H.G.R NUT	N050
h	1	3/4" Dia. x 8 1/2" HEX BOLT (GRD A449)	B340854A
j	1	3/4" Dia. HEX NUT	N030
k	2	1 ANCHOR CABLE HEX NUT	N100
l	2	1 ANCHOR CABLE WASHER	W100
m	8	1/2" x 1 1/4" A325 BOLT WITH CAPTIVE WASHER	SB12A
n	8	1/2" STRUCTURAL NUTS	N012A
o	8	1 1/16" O.D. x 5/16" I.D. STRUCTURAL WASHERS	W012A
p	1	BEARING PLATE RETAINER TIE	CT-100ST
q	6	5/8" x 10" H.G.R. BOLT	B581002
r	1	OBJECT MARKER 18" X 18"	E3151

SEE NOTES: *

ALTERNATIVE ITEMS NOT SHOWN. **
* ITEM(P) 8" WOOD-BLOCKOUT
** ITEM(Q) 25'GUARD FENCE PANEL



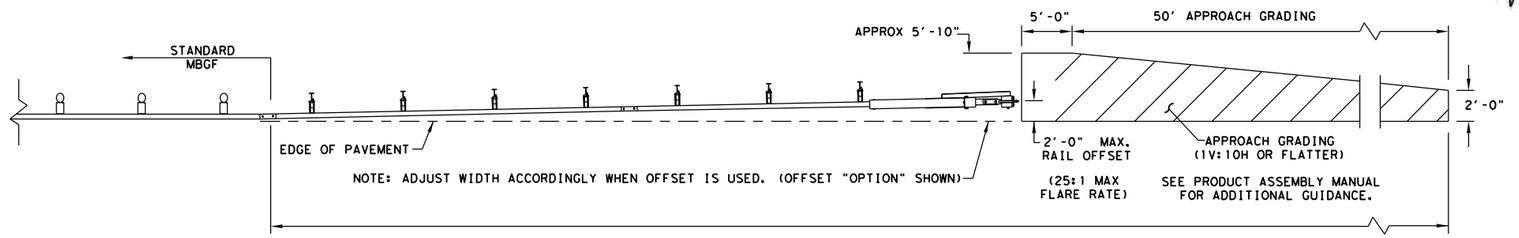

APPROACH GRADING AT GUARDRAIL END TREATMENTS

TRAFFIC FLOW

NOTE: TXDOT GENERIC APPROACH GRADING LAYOUT USED FOR ALL TANGENT TYPE END TREATMENTS.

NOTE: THIS STANDARD IS A BASIC REPRESENTATION OF THE MSKT END TERMINAL, IT IS NOT INTENDED TO REPLACE THE PRODUCT DESCRIPTION ASSEMBLY MANUAL.

Texas Department of Transportation

Design Division Standard

SINGLE GUARDRAIL TERMINAL
MSKT-MASH-TL-3
SGT(12S)31-18

FILE: sgt12s3118.dgn	DN: TxDOT	CK: KM	DW: VP	CK: CL		
© TxDOT: APRIL 2018	CONT	SECT	JOB		HIGHWAY	
REVISIONS						
	DIST	COUNTY			SHEET NO.	

DISCLAIMER:
The use of this standard is governed by the "Texas Engineering Practice Act". No warranty of any kind is made by TxDOT for any purpose whatsoever. TxDOT assumes no responsibility for the conversion of this standard to other formats or for incorrect results or damages resulting from its use.

DATE:
FILE:

BOX DATA

SECTION DIMENSIONS					Fill Height	M (Min)	REINFORCING (sq. in. / ft.) (2)							(1) Lift Weight
S (ft.)	H (ft.)	TT (in.)	TB (in.)	TS (in.)	(ft.)	(in.)	AS1	AS2	AS3	AS4	AS5	AS7	AS8	(tons)
3	2	7	6	4	< 2	–	0.17	0.25	0.16	0.10	0.17	0.17	0.14	3.3
3	2	4	4	4	2 < 3	31	0.13	0.19	0.18	0.10	–	–	–	2.4
3	2	4	4	4	3 – 5	31	0.10	0.11	0.12	0.10	–	–	–	2.4
3	2	4	4	4	10	31	0.10	0.10	0.10	0.10	–	–	–	2.4
3	2	4	4	4	15	31	0.10	0.13	0.13	0.10	–	–	–	2.4
3	2	4	4	4	20	31	0.11	0.17	0.17	0.10	–	–	–	2.4
3	2	4	4	4	25	31	0.14	0.21	0.21	0.10	–	–	–	2.4
3	2	4	4	4	30	31	0.17	0.25	0.25	0.10	–	–	–	2.4
3	2	4	4	4	35	31	0.20	0.29	0.30	0.10	–	–	–	2.4
3	3	7	6	4	< 2	–	0.17	0.27	0.17	0.10	0.17	0.17	0.14	3.7
3	3	4	4	4	2 < 3	31	0.10	0.22	0.21	0.10	–	–	–	2.8
3	3	4	4	4	3 – 5	31	0.10	0.14	0.14	0.10	–	–	–	2.8
3	3	4	4	4	10	31	0.10	0.11	0.11	0.10	–	–	–	2.8
3	3	4	4	4	15	31	0.10	0.14	0.15	0.10	–	–	–	2.8
3	3	4	4	4	20	31	0.10	0.18	0.19	0.10	–	–	–	2.8
3	3	4	4	4	25	31	0.10	0.23	0.23	0.10	–	–	–	2.8
3	3	4	4	4	30	31	0.12	0.27	0.28	0.10	–	–	–	2.8
3	3	4	4	4	35	31	0.14	0.32	0.32	0.10	–	–	–	2.8

(1) For box length = 8'-0"

(2) AS1 thru AS4, AS7 and AS8 are minimum required areas of reinforcement per linear foot of box length. AS5 is minimum required area of reinforcement per linear foot of box width.

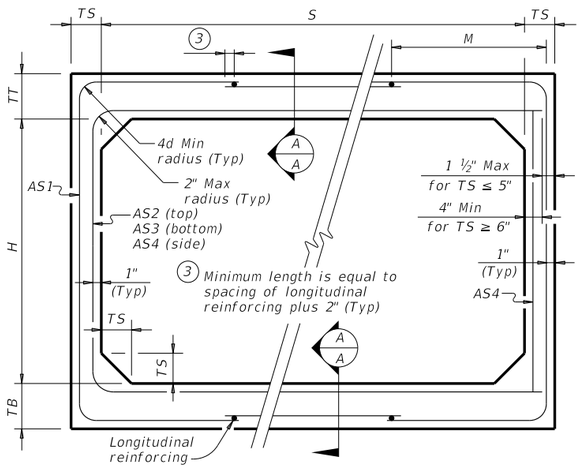

CORNER OPTION "A" CORNER OPTION "B"

FILL HEIGHT 2 FT AND GREATER

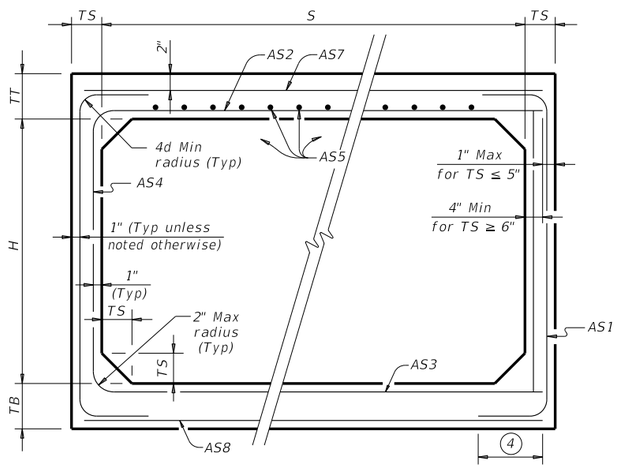

CORNER OPTION "A" CORNER OPTION "B"

FILL HEIGHT LESS THAN 2 FT

(4) Length is equal to spacing of longitudinal reinforcing plus 2". (10" Min) (Typ)

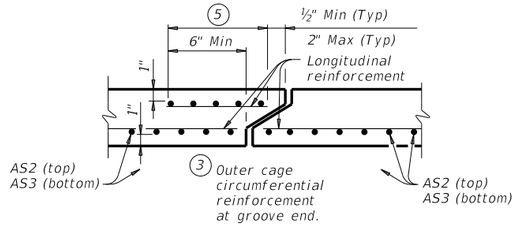

SECTION A-A

(Showing top and bottom slab joint reinforcement.)

MATERIAL NOTES:

Provide 0.03 sq. in./ft. minimum longitudinal reinforcement at each face in slabs and walls. This minimum requirement may be met by the transverse wires when wire mesh reinforcement is used.

Provide Class H concrete (f`c = 5,000 psi).

GENERAL NOTES:

Designs shown conform to ASTM C1577. Refer to ASTM C1577 for information or details not shown.

See Box Culverts Precast Miscellaneous Details (SCP-MD) standard sheet for details and notes not shown.

In lieu of furnishing the designs shown on this sheet, the contractor may furnish an alternate design that is equal to or exceeds the box design for the design fill height in the table. Submit shop plans for alternate designs in accordance with Item "Precast Concrete Structural Members (Fabrication)."

HL93 LOADING



Texas Department of Transportation

Bridge Division Standard

SINGLE BOX CULVERTS PRECAST

3'-0" SPAN

SCP-3

FILE: CD-SCP03-20.dgn	DN: TxDOT	CK: TxDOT	DW: TxDOT	CK: TxDOT
©TxDOT February 2020 REVISIONS	CONT	SECT	JOB	HIGHWAY
	DIST	COUNTY		SHEET NO.

DISCLAIMER:
The use of this standard is governed by the "Texas Engineering Practice Act". No warranty of any kind is made by TxDOT for any purpose whatsoever. TxDOT assumes no responsibility for the conversion of this standard to other formats or for incorrect results or damages resulting from its use.

DATE:
FILE:

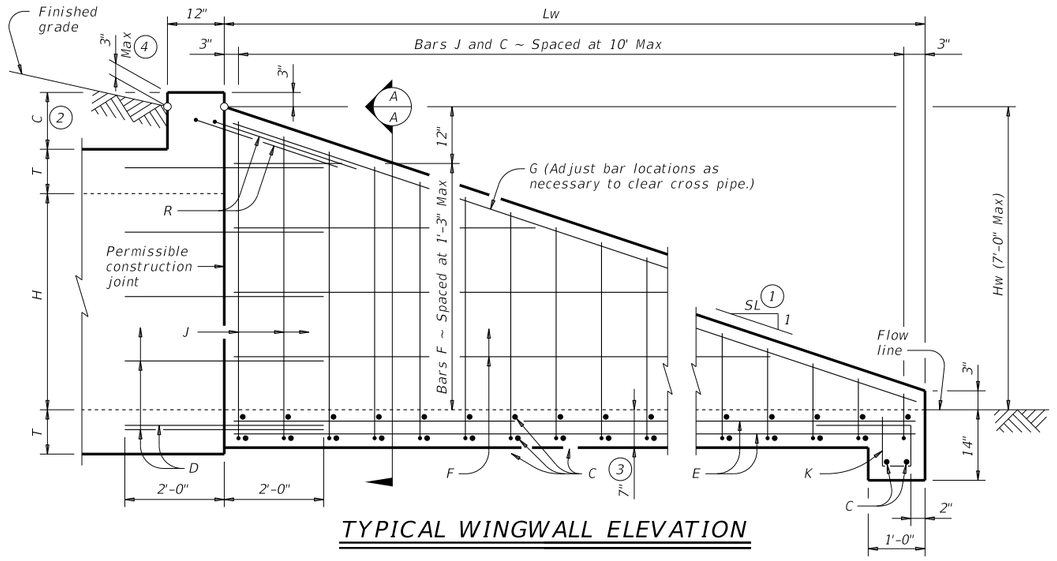

TYPICAL WINGWALL ELEVATION

(Cross pipes not shown for clarity.)

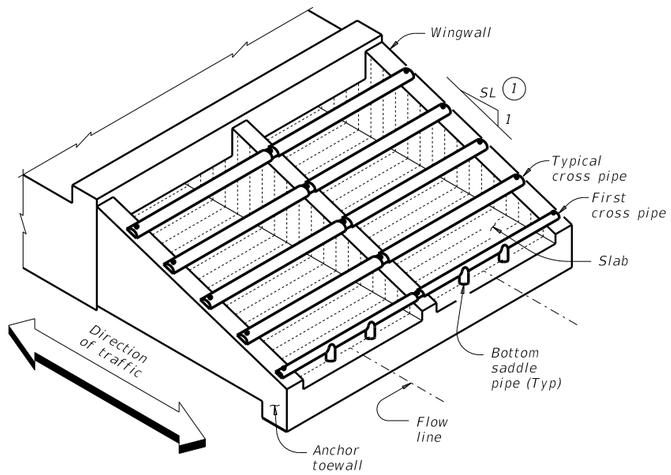

ISOMETRIC VIEW OF TYPICAL INSTALLATION

(Showing bolted anchor option.)

WING DIMENSION CALCULATIONS:

$Hw = H + T + C - 0.250'$

$Lw = (Hw - 0.250')\ (SL)$

For cast-in-place culverts:

$Atw = (N)\ (S) + (N + 1)\ (U)$

For precast culverts:

$Atw = (N)\ (2U + S) + (N - 1)\ (0.500')$

Total Wingwall Area (SF)
$= (0.5)\ (Hw + 0.250')\ (Lw)\ (N - 1)$

Total Concrete Volume (CY)
$= [(\text{Wingwall Area})\ (0.583') +$
$(Lw)\ (Atw)\ (0.583') +$
$(Atw)\ (1.000')\ (1.167' - 0.583')] \div (27)$

Total Reinforcing (Lb)
$= (1.55)\ (Lw)\ (Atw) +$
$(4.43)\ (Atw) +$
$(K)\ (Hw)\ (N + 1)\ (\sqrt{Lw})$

C = Height of curb above top of top slab (feet)
Hw = Height of wingwall (feet)
K = Constant value for use in formulas

Slope SL:1	K
6:1 ~	10.41

Atw = Anchor toewall length (feet)
Lw = Length of wingwall (feet)
N = Number of culvert barrels
SL:1 = Side slope ratio (horizontal : 1 vertical)

See applicable box culvert standard for H, S, T, and U values.

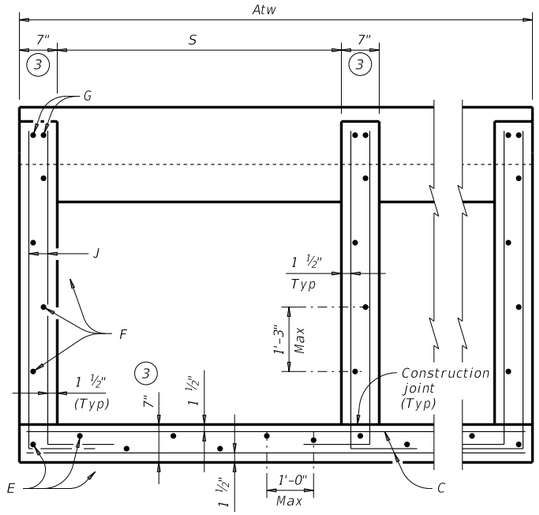

SECTION A-A

(Showing typical wingwall and wing slab reinforcing. Pipe runners not shown for clarity.)

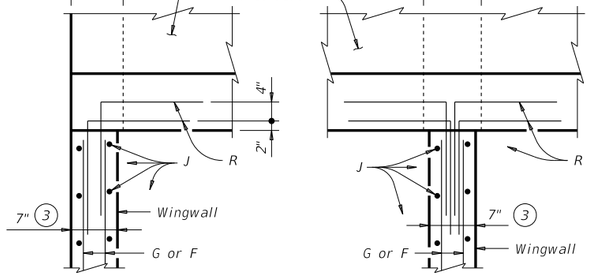

AT TOP OF EXTERIOR WINGWALL

(Cast-in-place culvert)

AT TOP OF INTERIOR WINGWALL

(Cast-in-place culvert)

AT OUTSIDE OF BOTTOM SLAB

(Cast-in-place culvert)

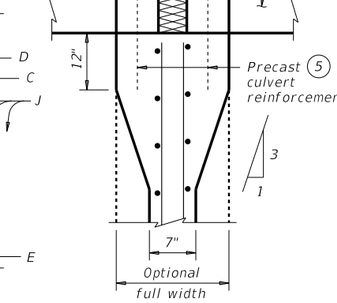

AT INTERIOR WINGWALL

(Precast culvert)

PLAN VIEWS OF CORNER DETAILS

MATERIAL NOTES:

Provide Grade 60 reinforcing steel.
Provide galvanized reinforcing steel if required elsewhere in the plans.
Adjust reinforcing as necessary to provide a minimum clear cover of 1½".
Provide Class "C" concrete (f`c = 3,600 psi).
Provide pipe runners, cross pipes, and anchor pipes meeting the requirements of ASTM A53 (Type E or S, Gr B), ASTM A500 Gr B, or API 5LX52.
Provide ASTM A307 bolts.
Galvanize all steel components, except the concrete reinforcing, unless required elsewhere in the plans, after fabrication.
Repair galvanizing damaged during transport or construction in accordance with Item 445, "Galvanizing."

GENERAL NOTES:

Designed according to AASHTO LRFD Bridge Design Specifications.
The safety end treatments shown herein are intended for use in those installations where out of control vehicles are likely to traverse the openings approximately perpendicular to the cross pipes.
Cross pipes are designed for a traversing load of 10,000 pounds at yield as recommended by Research Report 280-2F, "Safety Treatment of Roadside Parallel-Drainage Structures", Texas Transportation Institute, March 1981.
The quantities for concrete, reinforcing steel, and cross pipes resulting from the formulas given herein are for Contractor's information only.
See the Box Culvert Supplement (BCS) standard sheet for additional dimensions and information.
Alternate design drawings bearing the seal of a professional engineer will be acceptable for precast construction of the safety end treatments.

Cover dimensions are clear dimensions, unless noted otherwise. Reinforcing dimensions are out-to-out of bars.

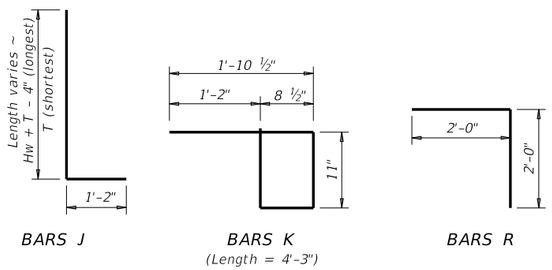

BARS J | BARS K (Length = 4'-3") | BARS R

TABLE OF REINFORCING BAR SIZES AND SPACING

Bar	Size	Spacing
C	#4	10" Max
D	#4	Match F and E
E	#4	1'- 0" Max
F	#4	1'- 3" Max
G	#6	As shown
J	#4	10" Max
K	#4	1'- 0" Max
R	#4	As shown

(1) Provide 6:1 or flatter slope.

(2) 0" Min to 5'-0" Max. Estimated curb heights are shown elsewhere in the plans. For structures without railing and curbs taller than 1'-0", refer to Extended Curb Details the Extended Curb Details (ECD) standard sheet.

(3) Wingwall and slab thicknesses may be the same as the adjacent culvert wall and slab thicknesses (7" Minimum). If thicknesses greater than the minimum (7") are used, no changes will be made in quantities and no additional compensation will be allowed.

(4) For vehicle safety, reduce height, if necessary, to provide a maximum 3" projection above finished grade. No changes will be made in quantities and no additional compensation will be allowed for this work.

(5) For culverts with C = 0", the precast culvert reinforcing may extend 1'-0" minimum into wingwall. Wingwall bars D and R may be omitted. Otherwise, refer to the Wingwall Connection detail on the Box Culvert Precast Miscellaneous Details (SCP-MD) standard sheet.



SHEET 1 OF 2

Texas Department of Transportation

Bridge Division Standard

SAFETY END TREATMENT
FOR BOX CULVERTS (MAXIMUM Hw = 7'-0")
TYPE I ~ PARALLEL DRAINAGE

SETB-PD

FILE: CD-SETBPD-22.dgn	DN: GAF	CK: CAT	DW: TxDOT	CK: TxDOT
©TxDOT February 2020	CONT	SECT	JOB	HIGHWAY
REVISIONS 06-2022 ~ Wing dimensions	DIST	COUNTY		SHEET NO.

DISCLAIMER:
The use of this standard is governed by the "Texas Engineering Practice Act". No warranty of any kind is made by TxDOT for any purpose whatsoever. TxDOT assumes no responsibility for the conversion of this standard to other formats or for incorrect results or damages resulting from its use.

DATE:
FILE:

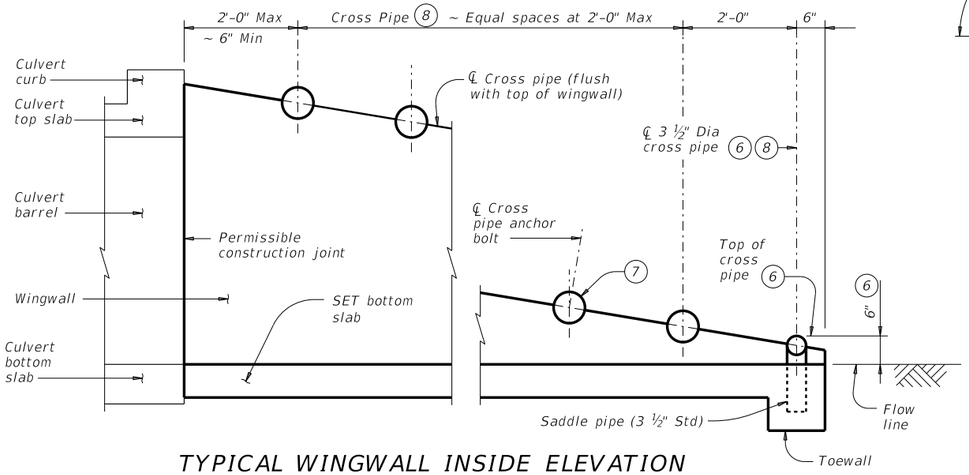

TYPICAL WINGWALL INSIDE ELEVATION

(Showing installation of cross pipes.)

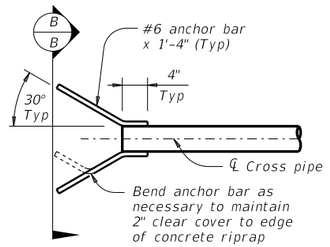

PART PLAN

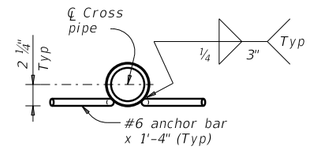

SECTION B-B

OPTIONAL ANCHOR BAR DETAILS

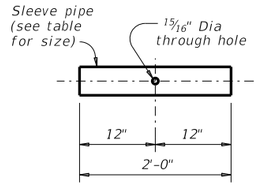

SLEEVE PIPE DETAILS (9)

REQUIRED PIPE SIZES (8)		
Culvert Span Sizes	Cross Pipe Size	Sleeve Pipe Size (9)
First Pipe	3 ½" STD	2 ½" STD
30" to 42"	4" STD	3" STD
48" to 72"	5" STD	4" STD
78" to 120"	6" STD	5" STD

STANDARD PIPE SIZES		
Pipe Size	Pipe O.D.	Pipe I.D.
2 ½" STD	2.875"	2.469"
3" STD	3.500"	3.068"
3 ½" STD	4.000"	3.548"
4" STD	4.500"	4.026"
5" STD	5.563"	5.047"
6" STD	6.625"	6.065"

(6) The proper installation of the first cross pipe is critical for vehicle safety. Place the top of the first cross pipe at no more than 6" above the flow line.

(7) Always install the third cross pipe from the bottom of the culvert using a bolted connection. Take care to ensure that concrete does not flow into this cross pipe so as to permit disassembly of the bolted connection to allow cleanout access.

(8) Provide cross pipes and sleeve pipes (if required) as shown in the Required Pipe Sizes table. Provide 3 1#2" saddle pipes for the 3 1#2" first cross pipe.

(9) At Contractor's option, make the cross pipe continuous across the inside wingwalls. If this option is selected, omit the sleeve pipe and make a 15#16" diameter throughhole in the cross pipe to accept the anchor bolt at the centerline of each interior wingwall.

(10) Provide riprap when using the Optional Anchor Bar details. Riprap is included in the bid price for Safety End Treatment. Provide riprap in accordance with Item 432, "Riprap."

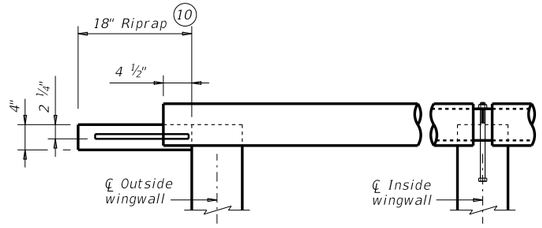

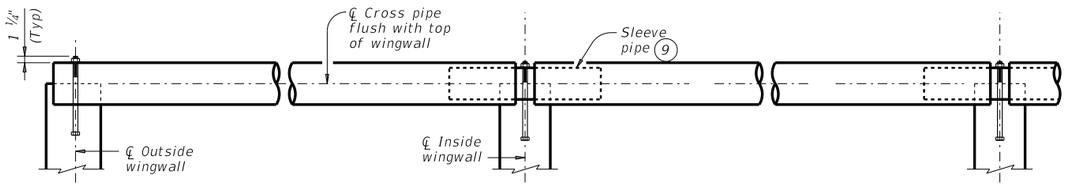

SECTION THROUGH INSTALLATION OF TYPICAL FULL CROSS PIPE

(Anchor details and dimensions are similar to those shown below in Section Through Installation of 3 ½" First Cross Pipe detail.)

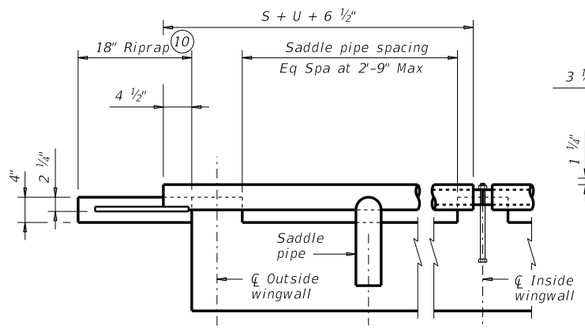

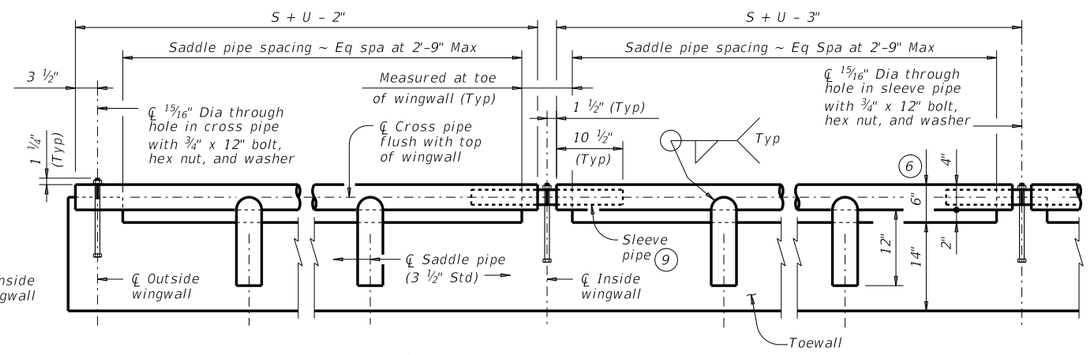

SECTION THROUGH INSTALLATION OF 3 ½" FIRST CROSS PIPE

OUTSIDE CULVERT BARREL WITH OPTIONAL ANCHOR BARS & RIPRAP

OUTSIDE CULVERT BARREL WITH BOLTED ANCHOR

INSIDE CULVERT BARREL

CROSS PIPE INSTALLATION DETAILS



SHEET 2 OF 2

Texas Department of Transportation

Bridge Division Standard

SAFETY END TREATMENT
FOR BOX CULVERTS (MAXIMUM Hw = 7'-0")
TYPE I ~ PARALLEL DRAINAGE

SETB-PD

FILE: CD-SETBPD-22.dgn	DN: GAF	CK: CAT	DW: TxDOT	CK: TxDOT
©TxDOT February 2020	CONT	SECT	JOB	HIGHWAY
REVISIONS 06-2022 ~ Wing dimensions				
	DIST	COUNTY		SHEET NO.

TARRANT COUNTY
COMMISSIONERS COURT COMMUNICATION

Court Date: December 9, 2025	**Court Order #:**	**Page:** 1 of 5
Department: Transportation	**Prepared By:** Sarah VanTassel	**Approved By:** Joseph Jackson

SUBJECT:

Consideration of an Interlocal Agreement with the City of Hurst for the Striping of Northeast Mall Boulevard and West Cheryl Avenue - Precinct 3

*****CONSENT AGENDA *****

COMMISSIONERS COURT ACTION REQUESTED

It is requested that the Commissioners Court consider an Interlocal Agreement (ILA) between Tarrant County and the City of Hurst for the Striping of Northeast Mall Boulevard and West Cheryl Avenue, located in Precinct 3.

BACKGROUND

The City of Hurst is requesting the County's assistance with applying permanent roadway striping on the Northeast Mall Boulevard, from Pipeline Road to service road, and West Cheryl Avenue, from Northeast Mall Boulevard to Melbourne Road.

With approval of this ILA, the County will provide the necessary labor, equipment and materials, and the City will reimburse the County for associated costs up to $26,857.80.

This ILA has been approved as to form by the Criminal District Attorney's Office.

FISCAL IMPACT

The City of Hurst will reimburse Tarrant County for labor, equipment, and material costs, up to $26,857.80.

PASSED AND APPROVED on December 9, 2025.

COUNTY OF TARRANT
STATE OF TEXAS

By: Separate Electronic Signature Page
Tim O'Hare

County Judge

APPROVED AS TO FORM:

_____

District Attorney's Office*

*By law, the District Attorney's Office may only approve contracts for its clients. We reviewed this document as to form from our client's legal perspective. Other parties may not rely on this approval. Instead, those parties should seek contract review from independent counsel.

Attachments

Striping ILA.pdf

THE STATE OF TEXAS

INTERLOCAL AGREEMENT

COUNTY OF TARRANT

This Interlocal Agreement is between Tarrant County, Texas ("COUNTY"), and the City of Hurst ("CITY").

WHEREAS, the CITY is requesting the COUNTY's assistance applying permanent roadway striping on the following streets (the "Project"), located within the CITY:

- Northeast Mall Boulevard – from Pipeline Road to service road. Work to include application of approximately 7,000 linear feet of paint, including turn arrows, stop bars, cross walks and installation of raised pavement markings.

- West Cheryl Avenue – from Northeast Mall Boulevard to Melbourne Road. Work to include application of approximately 3,500 linear feet of paint, including turn arrows, stop bars, cross walks and installation of raised pavement markings.

WHEREAS, the Interlocal Cooperation Act contained in Chapter 791 of the Texas Government Code provides legal authority for the parties to enter into this Agreement; and

WHEREAS, during the performance of the governmental functions and the payment for the performance of those governmental functions under this Agreement, the parties will make the performance and payment from current revenues legally available to that party; and

WHEREAS, the Commissioners Court of the COUNTY and the City Council of the CITY each make the following findings:

a. This Agreement serves the common interests of both parties;
b. This Agreement will benefit the public;
c. The division of costs fairly compensates both parties to this Agreement; and
d. The CITY and the COUNTY have authorized their representative to sign this Agreement; and
e. The COUNTY and CITY acknowledge that they are each a "governmental entity" and not a "business entity" as those terms are defined in Tex. Gov't Code § 2252.908, and therefore, no disclosure

of interested parties pursuant to Tex. Gov't Code Section 2252.908 is required.

NOW, THEREFORE, the COUNTY and the CITY agree as follows:

TERMS AND CONDITIONS

1. COUNTY RESPONSIBILITY

The COUNTY will furnish the labor, equipment, and materials to assist the CITY in completing the Project.

The COUNTY will use waterborne acrylic traffic paint that complies with current Texas Department of Transportation specifications.

The COUNTY will apply the striping during the hours of 8:30 AM to 2:30 PM, Monday to Friday.

2. CITY RESPONSIBILITY

The CITY will pay the COUNTY for the cost of labor and paint materials in an amount not to exceed $26,857.80. The actual cost to the CITY will be determined upon completion of the Project.

The CITY will provide striping documentation if there are no markings present or no longer visible, and if passing lanes or ANY deviation from the original striping is requested.

The CITY will provide a staging area if needed, and personnel to provide flagging and/or traffic control assistance as necessary.

The CITY will ensure prior to striping that the roadway surface is clean and serviceable for application of paint, and that temporary tabs and construction markings are removed.

The CITY will notify adjacent property owners of the schedule for striping services provided by the COUNTY. The CITY agrees that the CITY will be responsible for damages to adjacent property.

The CITY will pay COUNTY the invoiced amount for all striping, signs and incidental materials, upon completion of the Project.

3. PROCEDURES DURING PROJECT

If the CITY has a complaint regarding the COUNTY's performance of the Project, the CITY must complain in writing to the COUNTY no later than 30 days of the date of Project completion.

4. NO WAIVER OF IMMUNITY

This Agreement does not waive COUNTY rights under a legal theory of sovereign immunity. This Agreement does not waive CITY rights under a legal theory of sovereign immunity.

5. TIME PERIOD FOR COMPLETION

The CITY will give the COUNTY notice to proceed at the appropriate time. However, the COUNTY is under no duty to commence construction at any particular time.

6. THIRD PARTY

This contract shall not be interpreted to inure to the benefit of a third party not a party to this contract. This contract may not be interpreted to waive any statutory or common law defense, immunity, including governmental and sovereign immunity, or any limitation of liability, responsibility, or damage of any party to this contract, party's agent, or party's employee, otherwise provided by law.

7. JOINT VENTURE & AGENCY

The relationship between the parties to this Agreement does not create a partnership or joint venture between the parties. This Agreement does not appoint any party as agent for the other party.

8. EFFECTIVE DATE

This Agreement becomes effective when signed by the last party whose signing makes the Agreement fully executed.

9. TERMINATION OF AGREEMENT

This Agreement will automatically terminate upon completion of the Project or September 30, 2026, whichever date occurs first. This Agreement may be renewed prior to its expiration upon the mutual consent of the parties in writing.

TARRANT COUNTY, TEXAS

By: Separate Electronic Signature Page
Tim O'Hare
County Judge
Signed on:

CITY OF HURST

Authorized City Official

Date: 11-14-25

APPROVED AS TO FORM*

Criminal District Attorney's Office*

APPROVED AS TO FORM AND LEGALITY

City Attorney

* By law, the Criminal District Attorney's Office may only approve contracts for its clients. We reviewed this document as to form from our client's legal perspective. Other parties may not rely on this approval. Instead, those parties should seek contract review from independent counsel.

TARRANT COUNTY
COMMISSIONERS COURT COMMUNICATION

Department: Transportation **Prepared By:** Sarah VanTassel **Approved By:** Joseph Jackson

SUBJECT:

Consideration of an Interlocal Agreement with the City of Fort Worth for the Aledo Road Project - Precinct 4

***** CONSENT AGENDA *****

COMMISSIONERS COURT ACTION REQUESTED

It is requested that the Commissioner Court consider an Interlocal Agreement (ILA) between Tarrant County and the City of Fort Worth for the Aledo Road project, located in Precinct 4.

BACKGROUND

The City of Fort Worth is requesting the County's assistance with the reconstruction and asphalt overlay of a portion of Aledo Road after installation of water and sewer improvements by others; being approximately 10,073 square yards; all being located within unincorporated Tarrant County. The purpose of this agreement will be to furnish the labor and equipment necessary to assist the City in completing the project.

Tarrant County will provide the labor and equipment to mill and remove excess materials, reclaim and stablize with lime at 45 pounds per square yard at 10-inch depth, the exposed subgrade, regrade, shape and prime the stabilized roadbed, place four inches of asphalt surface (type B) and two inches of asphalt surface (type D), backfill pavement edges, stripe and clean the project of excessive spoil material as detailed in the contruction plans for City Project No. 105498.

The City will supply the County with Purchase Orders for 100% of the material costs in an amount not to exceed $475,854.96, and will be responsible for cost overruns.

The term of the ILA is through September 30, 2026, unless terminated or extended per the ILA terms.

This ILA has been approved as to form by the Criminal District Attorney's Office.

FISCAL IMPACT

There is not fiscal impact associated with this item.

PASSED AND APPROVED on December 9, 2025.

COUNTY OF TARRANT
STATE OF TEXAS

_____

Tim O'Hare
County Judge

_____

Manny Ramirez
Commissioner, Precinct 4

APPROVED AS TO FORM:

_____

District Attorney's Office*

*By law, the District Attorney's Office may only approve contracts for its clients. We reviewed this document as to form from our client's legal perspective. Other parties may not rely on this approval. Instead, those parties should seek contract review from independent counsel.

Attachments

ALEDO RD - ILA_Draft-final draft-11.14.25.pdf
Attachment A-Aledo road paving limits.pdf

CSC No. _____

THE STATE OF TEXAS

INTERLOCAL AGREEMENT

COUNTY OF TARRANT

This interlocal agreement (ILA) is entered into between Tarrant County, Texas, hereinafter referred to as the "COUNTY", and the City of Fort Worth hereinafter referred to as the "CITY", and collectively referred to as the "parties", for the purpose of providing funding to a needed project within the boundaries of Tarrant County, which the Commissioners Court of the COUNTY and the governing body of the CITY find serves a public purpose and promotes the public welfare of the citizens of Tarrant County.

WHEREAS the CITY is requesting the COUNTY'S assistance with the:

> Reconstruction and asphalt overlay of a portion of Aledo Road after installation of water and sewer improvements by others; being approximately 10,073 square yards; all being located within the COUNTY, referred to herein as the "**Project**"; and

WHEREAS, City has entered into that certain Community Facilities Agreement (CFA) (City Secretary Contract No. 63595) with PMB Team Ranch Devco, LLC ("Developer") for construction of the Rockbrook Sewer and Water Improvement project and to provide certain of City's obligations as detailed herein; and

WHEREAS, the Interlocal Cooperation Act contained in Chapter 791 of the Texas Government Code provides legal authority for the parties to enter into this Agreement; and

WHEREAS, during the performance of the governmental functions and the payment for the performance of those governmental functions under this Agreement, the parties will make the performance and payment from current revenues legally available to that party; and

WHEREAS, the Commissioners Court of the COUNTY and the City Council of the CITY each make the following findings:

a. This Agreement serves the common interests of both parties;
b. This Agreement will benefit the public;
c. The division of costs fairly compensates both parties to this Agreement; and
d. The CITY and the COUNTY have authorized their representative to sign this Agreement; and
e. Both parties acknowledge that they are each a "governmental entity" and not a "business entity" as those terms are defined in Tex. Gov't Code § 2252.908, and therefore, no disclosure of interested parties pursuant to Tex. Gov't Code Section 2252.908 is required.

NOW, THEREFORE, the COUNTY and the CITY agree as follows:

TERMS AND CONDITIONS

1. COUNTY RESPONSIBILITY

The COUNTY will furnish the labor and equipment to assist the CITY in completing the Project, generally depicted on Attachment A, attached hereto and incorporated herein.

For approximately 10,073 square yards of Aledo Road, COUNTY will mill and remove excess materials, COUNTY will reclaim, stabilize with lime at 45 pounds per square yard at 10-inch depth, the exposed subgrade, regrade, shape, and prime the stabilized roadbed, place four inches of asphalt surface (type B) and two inches of asphalt surface (type D), backfill pavement edges, stripe and clean the project of excessive spoil materials as detailed in the construction plans for City Project No. 105498, cover page for which is Attached hereto and incorporated herein as Attachment B.

2. CITY RESPONSIBILITY

CITY agrees to supply the COUNTY with Purchase Orders for 100% of the material costs in an amount not to exceed $475,854.96.

The CITY will be responsible for cost overruns.

CITY, via Developer, will furnish a site for dumping waste in close proximity to job site for materials generated during this project.

CITY will provide the COUNTY with a hydrant meter and all the water necessary for construction of the Project at no cost to the COUNTY.

CITY, via Developer, will be responsible for all traffic control necessary to safely construct this project. This responsibility includes all advance notices, signage, barricades, pilot vehicles, and flagmen necessary to control traffic in and around the construction site. The CITY, via Developer, will be responsible for and provide portable message boards to supplement traffic control as needed.

CITY, via Developer, will remove the existing surface and make any necessary roadway repairs and preparations prior to the COUNTY starting work, if required for this project.

CITY, via Developer, will adjust all utilities, manhole and valve boxes for this project.

If required, the CITY, via Developer, will be responsible for the design and development of a Storm Water Pollution Prevention Plan (SWPPP). The CITY, via Developer, further agrees to pay for all cost (including sub-contractor materials,

labor, and equipment) associated with the implementation of the plan. The COUNTY will be responsible for maintenance of the plan during the duration of the Project. Documentation and record keeping of the SWPPP will be the responsibility of the CITY.

CITY, via Developer, will provide a location for the County to park their heavy equipment near the job site: and

CITY will provide any soil lab testing and/or material testing needed for the project.

CITY will reimburse the COUNTY for actual cost of any overtime hours if the CITY requests the COUNTY to provide watering the roadway for dust control after regular work hours.

3. PROCEDURES DURING PROJECT

COUNTY retains the right to inspect and reject all materials provided for this Project.

If the CITY has a complaint regarding the construction of the project, the CITY must complain in writing to the COUNTY no later than 30 days of the date of project completion. Upon expiration of 30 days after project completion, the COUNTY will be solely responsible for maintenance and repairs of the entire Project.

4. NO WAIVER OF IMMUNITY

This Agreement does not waive COUNTY rights under a legal theory of sovereign immunity. This Agreement does not waive CITY rights under a legal theory of sovereign immunity.

5. OPTIONAL SERVICES

The COUNTY will apply permanent striping coordinated through the Transportation Department to the Project. Application of striping by the COUNTY is limited to this Project.

6. TIME PERIOD FOR COMPLETION

The CITY will give the COUNTY notice of completion of the Developer's Rockbrook Sewer and Water Improvement project so that the COUNTY may proceed with the work contemplated herein. However, the COUNTY is under no duty to commence construction at any particular time.

7. THIRD PARTY

This contract shall not be interpreted to inure to the benefit of a third party not a party to this contract. This contract may not be interpreted to waive any statutory or common law defense, immunity, including governmental and sovereign immunity, or any limitation of liability, responsibility, or damage of any party to this contract, party's agent, or party's employee, otherwise provided by law.

8. JOINT VENTURE & AGENCY

The relationship between the parties to this Agreement does not create a partnership or joint venture between the parties. This Agreement does not appoint any party as agent for the other party.

9. EFFECTIVE DATE

This Agreement becomes effective when signed by the last party whose signing makes the Agreement fully executed.

10. TERMINATION OF AGREEMENT

The initial term of this Agreement is until September 30, 2026, and will automatically renew for one year thereafter unless terminated by either party in writing. Either party may terminate this Agreement at any time—either before the expiration of the initial term or after the renewal of any term thereafter—by providing the other party with 30-days written notice of termination. In the event of termination by either party, neither party shall have any obligations to the other party under this Agreement, except that the CITY is still liable for payment to the COUNTY for any outstanding invoice for the Project.

11. COMPLIANCE WITH LAWS

In providing the services required by this Agreement, CITY shall observe and comply with all applicable federal, state, and local statutes, ordinances, rules, and regulations, including, without limitation, workers' compensation laws, minimum and maximum salary and wage statutes and regulations, and non-discrimination laws and regulations. CITY shall be responsible for ensuring its compliance with any laws and regulations applicable to its business, including maintaining any necessary licenses and permits.

12. EXECUTION OF AGREEMENT

This Agreement may be executed in one or more counterparts, each of which will be deemed to be an original copy of this agreement, and all of which, when taken together, shall be deemed to constitute one and the same agreement. The exchange of copies of this Agreement and of signature pages by electronic transmission shall constitute effective execution and delivery of this Agreement as to the parties and may be used in lieu of the original Agreement for all purposes.

Signatures of the parties transmitted or executed electronically shall be deemed to be their original signatures for any purpose whatsoever.

TARRANT COUNTY, TEXAS

_____
County Judge

Date: _____

_____
Manny Ramirez
Commissioner, Precinct Four

Attest:

_____

APPROVED AS TO FORM*

_____
Criminal District Attorney's Office*

CITY OF FORT WORTH

_____
Assistant City Manager

Date: _____

Recommended for Approval:

_____
Chris Harder, Director
Water Department

Attest:

_____
City Secretary

APPROVED AS TO FORM AND LEGALITY

_____
Sr. Assistant City Attorney

M&C: _____

Date: _____

* By law, the Criminal District Attorney's Office may only approve contracts for its clients. We reviewed this document as to form from our client's legal perspective. Other parties may not rely on this approval. Instead, those parties should seek contract review from independent counsel.

Contract Compliance Manager

By signing I acknowledge that I am the person responsible for the monitoring and administration of this contract, including ensuring all performance and reporting requirements.

_____

Name: Suby Varughese
Title: Development Services Water Section Engineering Manager



1/27/2025

COPYRIGHT 2025 CITY OF FORT WORTH
UNAUTHORIZED REPRODUCTION IS A VIOLATION OF APPLICABLE LAWS.

THIS DATA IS TO BE USED FOR A GRAPHICAL REPRESENTATION ONLY. THE ACCURACY IS NOT TO BE TAKEN / USED AS DATA PRODUCED FOR ENGINEERING PURPOSES OR BY A REGISTERED PROFESSIONAL LAND SURVEYOR. THE CITY OF FORT WORTH ASSUMES NO RESPONSIBILITY FOR THE ACCURACY OF SAID DATA.

M&C for ILA with Tarrant County Paving Limits.

FORT WORTH WATER

N

0 270 540 1,080 Feet

TARRANT COUNTY
COMMISSIONERS COURT COMMUNICATION

Court Date: December 9, 2025	**Court Order #:**	**Page:** 1 of 8
Department: Transportation	**Prepared By:** Sarah VanTassel	**Approved By:** Joseph Jackson

SUBJECT:

Consideration of an Interlocal Agreement between Tarrant County and the City of Forest Hill Related to the Cooperative Funding of the Wichita Street Widening Project - 2021 Transportation Bond Program

***** CONSENT AGENDA *****

COMMISSIONERS COURT ACTION REQUESTED

It is requested that the Commissioners Court consider an Interlocal Agreement (ILA) between Tarrant County and the City of Forest Hill related to the Cooperative Funding of the Wichita Street Widening Project - 2021 Transportation Bond Program (TBP) located in Precinct 1.

BACKGROUND

Following a presentation on November 1, 2022, the Commissioners Court gave consent to provide funding for the Wichita Street Improvement project through the 2021 Transportation Bond Program - Countywide Initiatives and Partnerships. This project is located within the corporate limits of the Cities of Forest Hill, Everman, and Fort Worth, and consists of widening an existing 2-lane asphalt roadway, from IH-20 to Roy C. Brooks Boulevard, to a 5-lane undivided curb and gutter roadway with continuous median turn-lane. The project will also include drainage improvements to the north fork of South Creek and South Creek crossings with an enclosed stormwater system to minimize current flooding conditions.

On November 11, 2025, the Commissioners Court, through Court Order #146321, approved Amendment No. 3 to the ILA with the City of Forest Hill officially designating Tarrant County as the lead agency for the the project, and deposited with the County the City's contribution for the project.

This ILA with the City of Forest Hill will establish cooperative funding for this project which includes Tarrant County 2021 Transportation Bond Program (TBP), Countywide Initiatives and Partnerships Category, the City of Forest Hill and the City of Fort Worth. Forest Hill was initially the lead agency for the project, as such, the City of Fort Worth had deposited their contribution of $500,000.00 with the City of Forest Hill. The City of Forest Hill will deposit with the County the City of Fort Worth's contribution at least sixty (60) days prior to the date set for receipt of the construction bids.

This ILA has been approved as to form by the District Attorney's Office.

FISCAL IMPACT

The City of Fort Worth's contribution, through the City of Forest Hill, in the amount of $500,000.00 will be deposited to Fund 45100-2026 Non-Debt Capital Fund / 6880100000 Road & Bridge Non-Departmental / 485101 Donated/Contribution Capital.

PASSED AND APPROVED on December 9, 2025.

COUNTY OF TARRANT
STATE OF TEXAS

_____
Tim O'Hare
County Judge

_____
Roderick Miles, Jr.
Commissioner, Precinct 1

APPROVED AS TO FORM:

_____
District Attorney's Office*

*By law, the District Attorney's Office may only approve contracts for its clients. We reviewed this document as to form from our client's legal perspective. Other parties may not rely on this approval. Instead, those parties should seek contract review from independent counsel.

Attachments

ILA Wichita Street Widening Cooperative Funding Agreement-Tarrant County.pdf
Resolution 2025-62 ILA Wichita Street Widening Cooperative Funding-Tarrant County.pdf

STATE OF TEXAS	§	**Interlocal Agreement for**
	§	**Wichita Street Widening Cooperative Funding**
COUNTY OF TARRANT	§	

This interlocal agreement (ILA) is entered into between Tarrant County, Texas, hereinafter referred to as the "COUNTY", and the City of Forest Hill, hereinafter referred to as the "CITY", and collectively referred to as the "parties", for the purpose of receiving funding to widen Wichita Street, a needed transportation project within the boundaries of both parties which the Commissioners Court of the COUNTY and the governing body of the CITY find serves a public purpose and promotes the public welfare of the citizens of Tarrant County. Cooperative funding for this project includes Tarrant County 2021 Transportation Bond Program (TBP), Countywide Initiatives and Partnerships Category, the City of Forest Hill, and the City of Fort Worth.

The COUNTY and the CITY make the following findings of fact:

1. This ILA is made pursuant to Chapter 791 of the Texas Government Code and the Tarrant County 2021 Transportation Bond Program Policy, as amended;

2. To the extent necessary, the parties will use current revenues to pay obligations in this ILA;

3. The project benefits the public in that it is a needed transportation project;

4. The COUNTY and the CITY each has the legal authority to perform its obligations in this ILA;

5. The division of costs provided in this ILA constitute adequate consideration to each party; and

6. Both parties acknowledge they are each a "governmental entity" and not a "business entity" as those terms are defined in Texas Government Code Section 2252.908, and therefore, no disclosure of interested parties is required.

I.
PROJECT DESCRIPTION

This project (hereinafter, the "Project") will improve Wichita Street from an existing 2-lane asphalt roadway, from IH-20 to Roy Brooks Boulevard, to a 5-lane undivided curb and gutter roadway with continuous median turn-lane. Improvements will also include drainage improvements to the north fork of South Creek and South Creek crossings with an enclosed stormwater system to minimize current flooding conditions. Additionally, the project will provide traffic signalization, illumination, and a 10-foot shared-use path.

II.
SCOPE OF SERVICES PROVIDED BY CITY

The CITY shall provide cooperative project funding in the amount of $500,000.00 for project construction costs by execution of this agreement.

III.
SCOPE OF SERVICES PROVIDED BY COUNTY

The services to be provided by the COUNTY shall include, but are not limited to, the following:

A. Following project completion, the COUNTY will provide the overall total project cost summary with final cost share between funding partners;

B. The COUNTY agrees to facilitate the efficient operations of the Project through ongoing transportation system maintenance efforts, including signal timing optimization as applicable;

C. Interagency coordination, including notification to the North Central Texas Council of Government (NCTCOG) and the CITY of any amendments or modifications to NCTCOG's Transportation Improvement Program (TIP);

D. The COUNTY agrees to invite the CITY to any project groundbreaking or ribbon cutting events; and

E. The COUNTY will include the following language on all public notices, web pages, and on-site signage related to the Project:

"This project is funded by the City of Forest Hill, the City of Fort Worth, and Tarrant County Commissioners Court through the Tarrant County 2021 Transportation Bond Program."

IV.
ASSIGNMENT

Neither party may assign, in whole nor in part, any interest it may have in this ILA without the prior written consent of the other party.

V.
THIRD-PARTY BENEFICIARY EXCLUDED

No person other than a party to this ILA may bring a cause of action pursuant to this ILA as a third-party beneficiary. This ILA may not be interpreted to waive the sovereign or governmental immunity of any party to this ILA to the extent such party may have immunity under Texas law.

VI.
ENTIRE AGREEMENT

This ILA represents the entire understanding of and between the parties and superseded all prior representations. This ILA may not be varied orally but must be amended by written document of subsequent date duly executed by these parties.

VII.
VENUE

This ILA shall be governed by the laws of the State of Texas and venue for any action under this ILA shall be in the district courts of Tarrant County, Texas.

VIII.
SOVEREIGN POWERS

The COUNTY and the CITY agree and understand neither Party waives nor surrenders any of its governmental powers by execution of this ILA.

IX.
COMPLIANCE WITH LAWS

In providing services required by this Agreement, CITY and any contractors the CITY engages to perform these services must observe and comply with all applicable federal, state and local statutes, ordinances, rules and regulations, including, without limitation, workers' compensation laws, minimum and maximum salary and wage statutes and regulations, and non-discrimination laws and regulations. CITY shall be responsible for ensuring its compliance with any laws and regulations applicable to its business, including maintaining any necessary licenses and permits.

X.
EXECUTION OF AGREMENT

This agreement may be executed in one or more counterparts, each of which will be deemed to be an original copy of this agreement, and all of which, when taken together, shall be deemed to constitute one and the same agreement. The exchange of copies of this agreement and of signature pages by electronic transmission shall constitute effective execution and delivery of this agreement as to the parties and may be used in lieu of the original agreement for all purposes. Signatures of the parties transmitted or executed electronically shall be deemed to be their original signatures for any purpose whatsoever.

APPROVED on this day the _____ day of _____, 2025, by Tarrant County.

Commissioners Court Order No. _____.

TARRANT COUNTY, TEXAS

Tim O'Hare, County Judge

Roderick Miles Jr., Commissioner Precinct 1

APPROVED AS TO FORM:

Criminal District Attorney's Office*

CITY OF FOREST HILL

City Mayor

City Secretary

City Attorney

* By law, the Criminal District Attorney's Office may only approve contracts for its clients. We reviewed this document as to form from our client's legal perspective. Other parties may not rely on this approval. Instead, those parties should seek contract review from independent counsel.

Tarrant County Funding	
2021 Transportation Bond Program - Countywide Initiatives and Partnerships:	$13,610,000
ROW acquisition conducted by Tarrant County:	$ 700,000
	$14,310,000
Other Funding	
City of Forest Hill contribution (by separate agreement):	$ 2,390,000
City of Fort Worth contribution (paid through City of Forest Hill):	$ 500,000
Total	$17,200,000

CITY OF FOREST HILL, TEXAS

RESOLUTION NO. 2025-62

A RESOLUTION OF THE CITY COUNCIL OF THE CITY OF FOREST HILL, TEXAS, APPROVING AN INTERLOCAL AGREEMENT FOR WICHITA STREET WIDENING COOPERATIVE FUNDING WITH TARRANT COUNTY, TEXAS; AUTHORIZING THE CITY MANAGER TO EXECUTE THE SAID AGREEMENT; AND PROVIDING AN EFFECTIVE DATE.

WHEREAS, Chapter 791 of the Texas Government Code (the Texas Interlocal Cooperation Act) provides for the cooperation between local governmental bodies; and

WHEREAS, pursuant to that Act, Tarrant County and the City of Forest Hill previously entered into a Funding Interlocal Agreement for the Widening of Wichita Street and amendments thereto for the purpose of providing funding through the Tarrant County 2021 Transportation Bond Program to a needed transportation project within the boundaries of the County and the City, to wit, the widening of Wichita Street from a two-lane asphalt road to a five-land concrete road from Interstate 20 frontage road to Roy C. Brooks Boulevard (the "Project"); and

WHEREAS, the City and the County desire to enter into a new agreement regarding the cooperative funding for the Project in substantially the form of that attached hereto as Exhibit "A;" and

WHEREAS, the City Council of the City of Forest Hill finds that approval of the Interlocal Agreement for Wichita Street Widening Cooperative Funding, attached hereto as Exhibit "A," is necessary for the benefit of the public, that it serves a public purpose and promotes the public welfare of the citizens of the City of Forest Hill, and that the City and Tarrant County have legal authority to perform and to provide the governmental functions or services which are the subject matter of said Agreement and that the agreement should be approved.

NOW THEREFORE, BE IT RESOLVED BY THE CITY COUNCIL OF THE CITY OF FOREST HILL, TEXAS, THAT:

SECTION 1. The recitals and findings set forth above and adopted as true and correct and made a part hereof.

SECTION 2. The City Council of the City of Forest Hill, Texas hereby approves the Interlocal Agreement for Wichita Street Widening Cooperative Funding, in substantially the form of that attached hereto as Exhibit "A," and authorizes the City Manager to execute said Agreement in substantially the form of that attached hereto as Exhibit "A" along with all necessary, related documents on behalf of the City.

SECTION 3. This Resolution shall become effective immediately from and after its passage.

DULY RESOLVED AND ADOPTED ON THIS THE 18th DAY OF NOVEMBER 2025, BY THE CITY COUNCIL OF THE CITY OF FOREST HILL, TEXAS.

APPROVED:

Stephanie Boardingham

Stephanie Boardingham, Mayor

ATTEST:

Amy L Anderson

Amy L. Anderson, TRMC, CMC
City Secretary

APPROVED AS TO FORM:

Courtney Goodman-Morris,
Asst. City Attorney

Exhibit A

INTERLOCAL AGREEENT BETWEEN THE CITY OF FOREST HILL AND TARRANT COUNTY FOR WICHITA STREET WIDENING COOPERATIVE FUNDING

TARRANT COUNTY
COMMISSIONERS COURT COMMUNICATION

Court Date: December 9, 2025	**Court Order #:**	**Page:** 1 of 7
Department: Transportation	**Prepared By:** Sarah VanTassel	**Approved By:** Joseph Jackson

SUBJECT:

Consideration of Amendment No. 1 to the Interlocal Agreement with the City of Colleyville Related to the John McCain Road Bridge Widening and Curvature Improvements Project - 2006 Transportation Bond Program

***** CONSENT AGENDA *****

COMMISSIONERS COURT ACTION REQUESTED

It is requested that the Commissioners Court approve Amendment No. 1 to the Interlocal Agreement (ILA) with the City of Colleyville related to the John McCain Road Bridge Widening and Curvature Improvements project - 2006 Transportation Bond Program (TBP), located in Precinct 3.

BACKGROUND

On October 16, 2012, the Commissioners Court, through Court Order #143195, approved an ILA with the City of Colleyville for financial support, in an amount not to exceed $150,000.00, for the cooperative funding of bridge widening and curvature improvements to John McCain Road from Monticello Parkway to Stillwater Circle. This project is being funded by the 2006 TBP Precinct 3 Discretionary account.

The project is in its final construction phase, requiring that the agreement expiration term be extended.

With approval, Amendment No. 1 will extend the term date to September 30, 2026 or until project completion, and provide financial support from the conception until project completion.

This amendment has been reviewed and approved as to form by the District Attorney's Office.

FISCAL IMPACT

There is no fiscal impact to the FY 2026 TBP. This Amendment is extending the term of the agreement only.

PASSED AND APPROVED on December 9, 2025.

COUNTY OF TARRANT

STATE OF TEXAS

_____

Tim O'Hare
County Judge

_____

Matt Krause
Commissioner, Precinct 3

APPROVED AS TO FORM:

_____

District Attorney's Office*

*By law, the District Attorney's Office may only approve contracts for its clients. We reviewed this document as to form from our client's legal perspective. Other parties may not rely on this approval. Instead, those parties should seek contract review from independent counsel.

Attachments

Amendment No. 1 ILA.pdf

STATE OF TEXAS	**§**	**Amendment No. 1 to Interlocal Agreement for**
	§	**John McCain Road Bridge Widening**
COUNTY OF TARRANT	**§**	**and Curvature, Improvements**

Tarrant County ("COUNTY") and the City of Colleyville ("CITY"), collectively referred to as the "PARTIES", entered into an Interlocal Agreement approved by Tarrant County Commissioners Court Order No. 140839, City Secretary No. 59370, for the purpose of providing up to $150,000.00 in funding through the Tarrant County 2006 Transportation Bond Program (2006 TBP) for a needed transportation project within the boundaries of both parties which the Commissioners Court of the COUNTY and the governing body of the CITY find serves a public purpose and promotes the public welfare of the citizens of Tarrant County.

The COUNTY and the CITY make the following findings of fact:

1. This ILA is made pursuant to Chapter 791 of the Texas Government Code and the Tarrant County 2006 Transportation Bond Program Policy, as amended;

2. To the extent necessary, the parties will use current revenues to pay obligations in this ILA;

3. The project benefits the public in that it is a needed transportation project;

4. The COUNTY and the CITY each have the legal authority to fulfil its obligations in this ILA;

5. The division of costs provided in this ILA constitute adequate consideration to each party; and

6. Both parties acknowledge they are each a "governmental entity" and not a "business entity" as those terms are defined in Texas Government Code Section 2252.908, and therefore, no disclosure of interested parties is required.

I.
PROJECT DESCRIPTION

This project, hereinafter referred to as the "PROJECT", will consist of the construction, or reconstruction, of John McCain Road Bridge Widening Improvements. The PROJECT includes construction of safety improvements on John McCain Road from Monticello Parkway approximately 900' to the curve at Stillwater Circle (Private Drive). The scope of the PROJECT also includes widening of the culvert over the tributary of Big Bear Creek just west of Monticello Parkway with associated asphalt roadway, curb and gutter, inlet and storm pipe, and drive replacement. The scope additionally includes roadway improvements to the sharp horizontal curve along John McCain at Stillwater Circle.

II.
SCOPE OF SERVICES PROVIDED BY CITY

The services to be provided by the CITY shall include, but are not limited to, the following:

A. All total project costs including construction, right of way acquisition, utility relocation, engineering/design, planning, surveying, materials testing and governmental approval costs (collectively referred to as "Costs");

B. Following project completion, the CITY will provide the overall total project cost summary with final cost share between funding partners;

C. Construction agreement administration, site review, permitting, and inspection;

D. The CITY agrees to facilitate the efficient operations of the Project through ongoing transportation system maintenance efforts, including signal timing optimization as applicable;

E. Interagency coordination, including CITY notification to the North Central Texas Council of Government (NCTCOG) and the COUNTY of any amendments or modifications to NCTCOG's Transportation Improvement Program (TIP);

F. A detailed project schedule documenting the percentage complete for each major component of the Project shall be provided to the COUNTY with every reimbursement request;

G. The CITY agrees to invite the COUNTY to any project groundbreaking or ribbon cutting events; and

H. The CITY will include the following language on all public notices, web pages, and on-site signage related to the Project:

"This project is funded by the City of Colleyville and the Tarrant County Commissioners Court through the Tarrant County 2006 Transportation Bond Program, Precinct 3, Commissioner."

III.
TERM

This ILA shall become effective upon the approval of both parties and shall terminate on September 30, 2026, unless terminated as described in Section XII in this ILA or extended in writing and approved by both parties.

IV.
FISCAL FUNDING ACKNOWLEDGEMENT

Tarrant County bond funds will be encumbered on a fiscal year basis in accordance with the Certification of Available Funds shown herein. In the event no funds or insufficient funds are appropriated and budgeted or are otherwise unavailable by any means whatsoever in any fiscal period for payments due under this ILA, then the affected party will immediately notify the other party of such occurrence and this ILA may be terminated on the last day of the fiscal period for which appropriations were received without penalty or expense to the affected party of any kind whatsoever, except to the portions of annual payments herein agreed upon for which funds shall have been appropriated.

V.
REIMBURSEMENT PROCESS

The COUNTY agrees to reimburse the CITY for the actual eligible PROJECT costs, from the inception of the PROJECT until completion, in an amount not to exceed $150,000.00. Any reimbursement request from the CITY should include: 1) a copy of the invoice or billing for design services, right-of-way acquisition purchase, and construction; and 2) a copy of the check, a certification letter, or other documentation to verify the CITY's proof of payment. The final reimbursement payment to the CITY will be contingent upon the City Manager or Mayor providing written notification to the COUNTY that the project is complete along with identification of final project costs. COUNTY bond funds for the Project are allocated as follows: TBP Funding Category: 2006 - TBP, Pct. 3 Discretionary. *Reimbursement payments will be issued by the COUNTY for eligible expenses incurred during the Fiscal Year for which bond funds are certified by the Tarrant County Auditor.*

The CITY understands that the CITY will be responsible for cost overruns and any other expenses incurred by the CITY in performing the services described herein. The CITY agrees that the COUNTY retains control over when reimbursement payments will be disbursed to the CITY.

VI.
AGENCY-INDEPENDENT CONTRACTOR

Neither the COUNTY nor any employee thereof is an agent of the CITY, and neither the CITY nor any employee thereof is an agent of the COUNTY. This ILA does not and shall not be construed to entitle either party or any of their respective employees, if applicable, to any benefit, privilege or other amenities of employment by the other party.

The COUNTY will have no right to control the manner or means of construction of the CITY's contractor for this PROJECT.

VII.
ASSIGNMENT

Neither party may assign, in whole nor in part, any interest it may have in this ILA without the prior written consent of the other party.

VIII.
THIRD-PARTY BENEFICIARY EXCLUDED

No person other than a party to this ILA may bring a cause of action pursuant to this ILA as a third-party beneficiary. This ILA may not be interpreted to waive the sovereign or governmental immunity of any party to this ILA to the extent such party may have immunity under Texas law.

IX.
AUDIT OF RECORDS

The CITY's records regarding this PROJECT shall be subject to audit by the COUNTY during the term of this ILA and for five years after the completion of the PROJECT.

X.
ENTIRE AGREEMENT

This ILA represents the entire understanding of and between the parties and superseded all prior representations. This ILA may not be varied orally but must be amended by written document of subsequent date duly executed by these parties.

XI.
VENUE

This ILA shall be governed by the laws of the State of Texas and venue for any action under this ILA shall be in the district courts of Tarrant County, Texas.

XII.
TERMINATION

COUNTY:
County Administrator
Tarrant County
100 E. Weatherford Street, Ste. 404
Fort Worth, Texas 76196

CITY:
City Manager
City of Colleyville
100 Main Street
Colleyville, TX 76034

With copy to:
Whitt L. Wyatt, City Attorney
Wyatt Hamilton Findlay, PLLC
5810 Long Prairie Road Suite 700-220
Flower Mound, Texas 75028

XIII.
SOVEREIGN POWERS

The COUNTY and the CITY agree and understand neither Party waives nor surrenders any of its governmental powers by execution of this ILA.

XIV.
COMPLIANCE WITH LAWS

In providing services required by this Agreement, CITY and any contractors the CITY engages to perform these services must observe and comply with all applicable federal, state and local statutes, ordinances, rules and regulations, including, without limitation, workers' compensation laws, minimum and maximum salary and wage statutes and regulations, and non-discrimination laws and regulations. CITY shall be responsible for ensuring its compliance with any laws and regulations applicable to its business, including maintaining any necessary licenses and permits.

XV.
EXECUTION OF AGREEMENT

This agreement may be executed in one or more counterparts, each of which will be deemed to be an original copy of this agreement, and all of which, when taken together, shall be deemed to constitute one and the same agreement. The exchange of copies of this agreement and of signature pages by electronic transmission shall constitute effective execution and delivery of this agreement as to the parties and may be used in lieu of the original agreement for all purposes. Signatures of the parties transmitted or executed electronically shall be deemed to be their original signatures for any purpose whatsoever.

APPROVED on this day the _____ day of _____, 2025, by Tarrant County.

Commissioners Court Order No. _____.

TARRANT COUNTY, TEXAS

_____
Tim O'Hare, County Judge

_____
Matt Krause, Commissioner - Precinct 3

CITY OF COLLEYVILLE

_____
City Manager

_____
City Attorney

Approved by
Resolution R-25-5089
NOV 05 2025
Colleyville
City Council

APPROVED AS TO FORM:

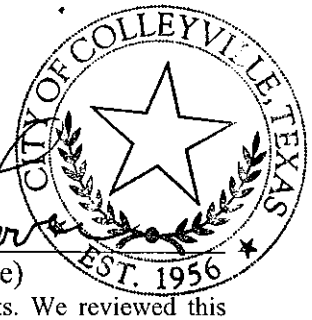

Criminal District Attorney's Office*

City Secretary (If applicable)

* By law, the Criminal District Attorney's Office may only approve contracts for its clients. We reviewed this document as to form from our client's legal perspective. Other parties may not rely on this approval. Instead, those parties should seek contract review from independent counsel.

CERTIFICATION OF AVAILABLE FUNDS IN THE AMOUNT OF:

$_____ *as follows:* Fiscal year ending September 30, 2026: $150,000.00 - 2006 TBP, Pct. 3 Discretionary

Auditor's Office

TARRANT COUNTY
COMMISSIONERS COURT COMMUNICATION

Department: Transportation **Prepared By:** Sarah VanTassel **Approved By:** Joseph Jackson

SUBJECT:

Consideration to Rescind Court Order No. 145789 and Reconsideration of Final Plat - Park Drive Subdivision - Precinct 4

***** CONSENT AGENDA *****

COMMISSIONERS COURT ACTION REQUESTED

It is requested that the Commissioners Court rescind Court Order #145789, and consider for recording in the Plat Records of Tarrant County, Texas, the Final Plat of Lots 1-19, Block 1, Park Drive Subdivision, an addition to Tarrant County, Texas; being 23.19 acres of land, a replat of Lots 1-19, Block 1, Park Drive Subdivision, an addition to Tarrant County, Texas, as recorded in D225157226, Plat Records, Tarrant County, Texas.

BACKGROUND

On August 19, 2025, Commissioners Court approved through Court Order #145789, the Final Plat and accepted the Construction Bond for the Park Drive Subdivision located in Precinct 4.

The developer submitted a replat with privately owned and maintained streets, and requests that Tarrant County vacate the previously approved plat and release the associated Construction Bond.

The subdivision was released from the City of Fort Worth extraterritorial jurisdiction (ETJ). The ETJ Release is attached and was approved by the City of Fort Worth on April 3, 2024, Tracking No. BAX-24-028.

There is no Federal Emergency Management Agency designated floodplain associated with this plat.

A location map of this subdivision in Precinct 4 is attached.

A copy of the court communication for Court Order #145789 is attached.

A copy of the developer's request to vacate the previously approved plat is attached.

The proposed final plat has been reviewed by Tarrant County Transportation Services and has successfully met the standards contained in the Tarrant County Developement Regulations Manual.

FISCAL IMPACT

There is no fiscal impact associated with this item.

Attachments

Park Drive Replat.TCP-25-014.UNINC-Application.ETJ Release-10212025.pdf
Park Drive Subdivision lots 1_19_Bk1 Court Map.pdf
Park Drive.TCP-24-005.UNINC-Court Order 145789-08192025.pdf
Park Drive Replat.TCP-25-014.UNINC-Application.Vacate Public Roadway Request-11132025.pdf
Park Drive.TCP-25-014.UNINC-Signed Plat for CCAgenda-11252025.pdf
Park Drive Replat.TCP-25-014.UNINC-Tax Certificates-11252025.pdf

April 3, 2024

Mickey Patterson
9600 Park Drive
Fort Worth, Texas 76179

RE: Release of Area from the City of Fort Worth's Extraterritorial Jurisdiction (ETJ) by Petition of Landowner or Resident Pursuant to Chapter 42, Subchapter D of the Texas Local Government Code Tracking No. BAX-24-028

Dear Mickey Patterson:

On March 26, 2024, the City of Fort Worth received a petition to release an area from the City of Fort Worth's extraterritorial jurisdiction pursuant to Chapter 42, Subchapter D of the Texas Local Government Code. A description of the area that was included in the petition is attached hereto as Exhibit "A". The City of Fort Worth has reviewed the petition and has determined that the petition complies with state law. Therefore, the area described in Exhibit "A" is released from the City of Fort Worth's extraterritorial jurisdiction.

Release from the Fort Worth Extraterritorial Territorial Jurisdiction (ETJ) means that your property will no longer fall under limited jurisdictional authority granted by the State of Texas to the City of Fort Worth. The City of Fort Worth will have no oversight in matters including but not limited to regional planning of services such as the water, sewer, and transportation networks and the general health, safety, and welfare of persons residing in the property(s) included in the petition. Please note that removal from the ETJ prevents the option to receive City of Fort Worth services in the future including police and fire services.

Any area that has been released from the City of Fort Worth's ETJ may not be included in the ETJ or corporate boundaries of the City of Fort Worth unless the owners of the area subsequently request that the area be included in the City of Fort Worth's ETJ or corporate boundaries.

Sincerely,

Dalton J. Harrell
Dalton J. Harrell (Apr 3, 2024 12:05 CDT)

D.J. Harrell
Director
Development Services Department
Office: 817-392-8032
Email: Dalton.Harrell@fortworthtexas.gov

BAX-24-028

Exhibit A

Approximately 23.186 Acres Adjacent Council District 7

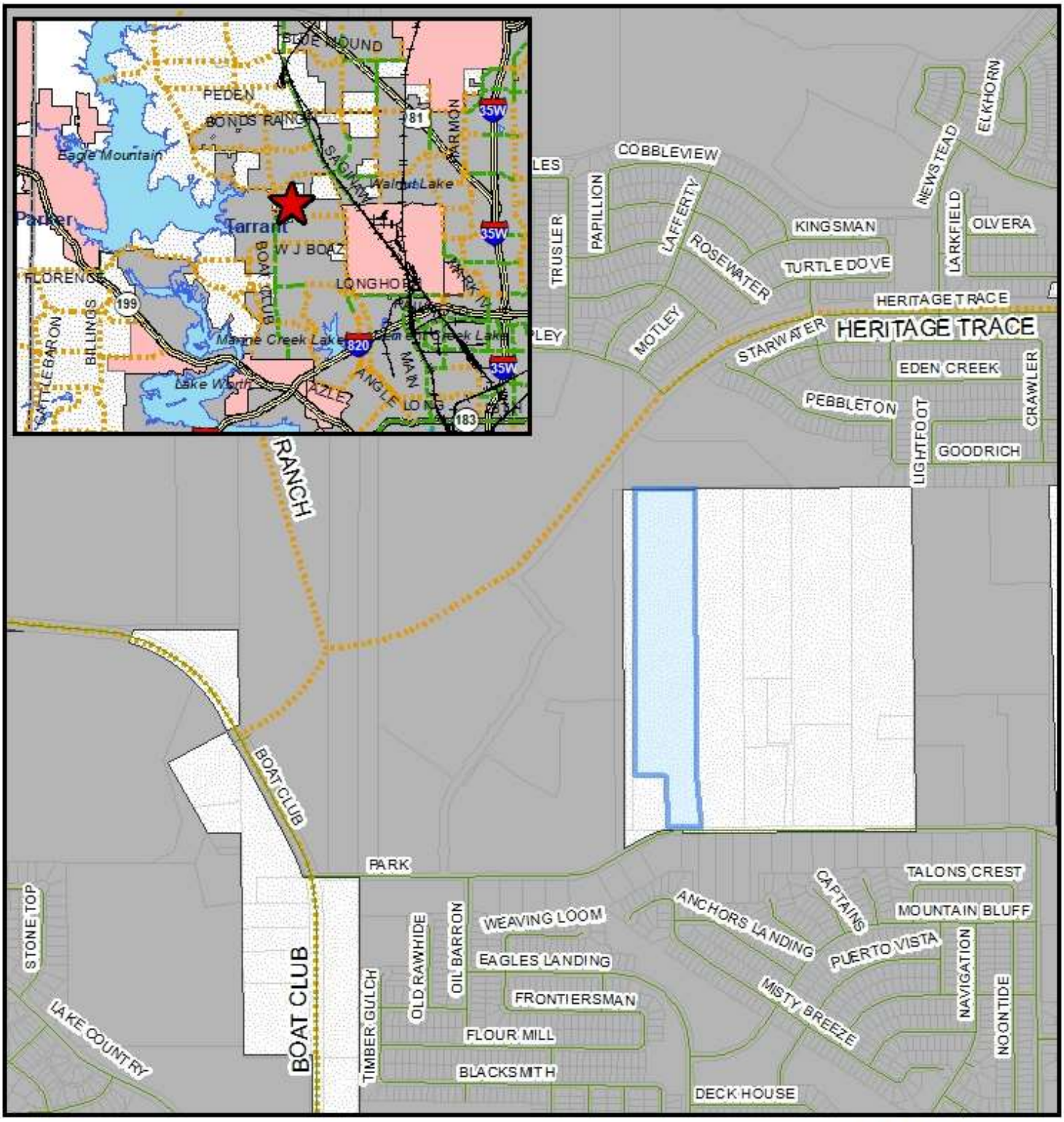

0 600 1,200 Feet

1:12,000

FORT WORTH

Development Services Department
03/26/2024

Fort Worth
DESIGNATION

- Full Purpose
- Limited Purpose
- Extraterritorial Jurisdiction
- County Boundaries
- Adjacent Cities
- Subject Property

COPYRIGHT 2024 CITY OF FORT WORTH UNAUTHORIZED REPRODUCTION IS A VIOLATION OF APPLICABLE LAWS. THIS DATA IS TO BE USED FOR A GRAPHICAL REPRESENTATION ONLY. THE ACCURACY IS NOT TO BE TAKEN / USED AS DATA PRODUCED FOR ENGINEERING PURPOSES OR BY A REGISTERED PROFESSIONAL LAND SURVEYOR. THE CITY OF FORT WORTH ASSUMES NO RESPONSIBILITY FOR THE ACCURACY OF SAID DATA.

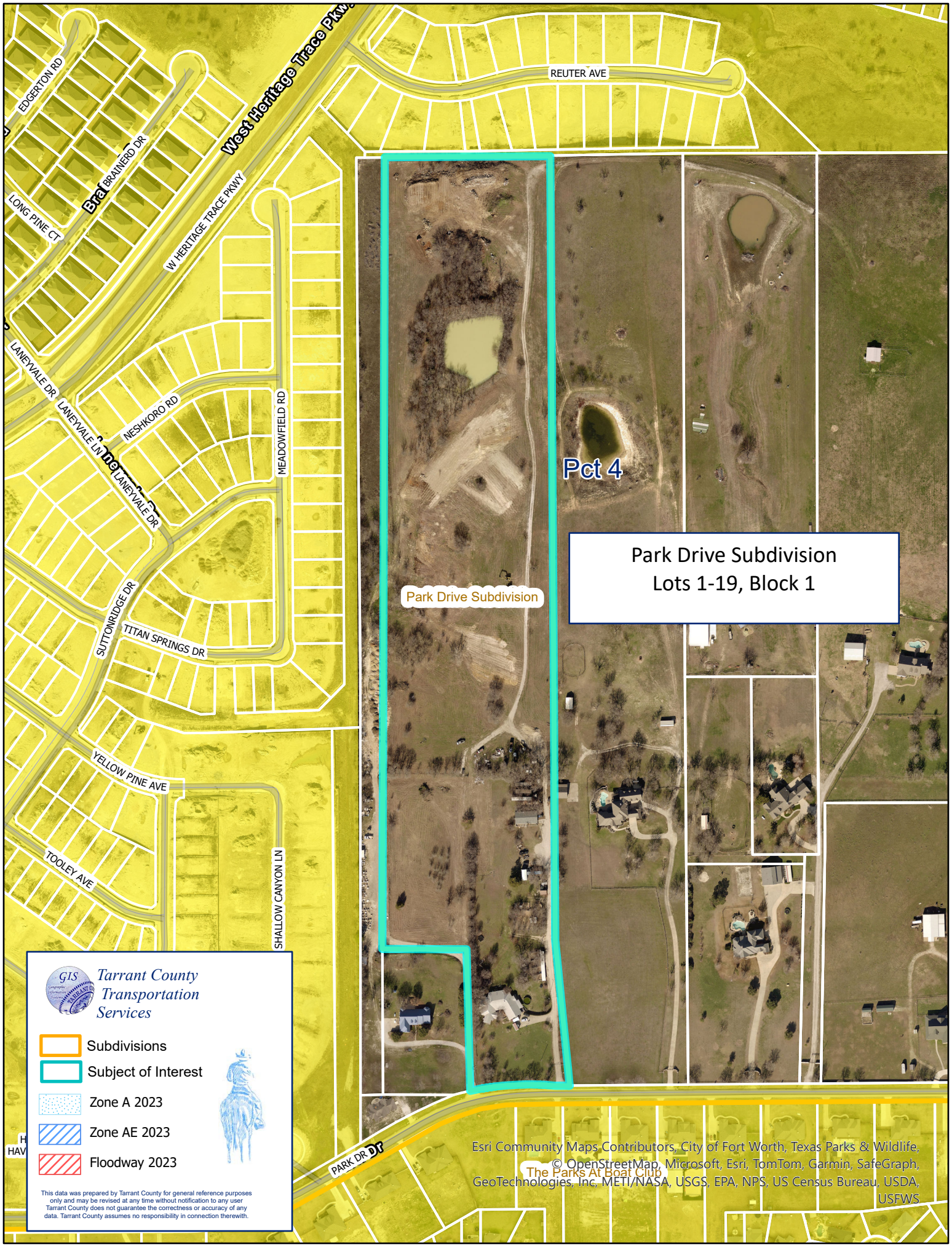
West Heritage Trace Pkwy
REUTER AVE
EDGERTON RD
BRAINERD DR
LONG PINE CT
W HERITAGE TRACE PKWY
LANEYVALE DR
LANEYVALE LN
LANEYVALE DR
NESHKORO RD
MEADOWFIELD RD
SUTTONRIDGE DR
TITAN SPRINGS DR
YELLOW PINE AVE
TOOLEY AVE
SHALLOW CANYON LN
PARK DR
Pct 4
Park Drive Subdivision
Lots 1-19, Block 1
Park Drive Subdivision
The Parks At Boat Club
Tarrant County Transportation Services
GIS
Subdivisions
Subject of Interest
Zone A 2023
Zone AE 2023
Floodway 2023
This data was prepared by Tarrant County for general reference purposes only and may be revised at any time without notification to any user Tarrant County does not guarantee the correctness or accuracy of any data. Tarrant County assumes no responsibility in connection therewith.
Esri Community Maps Contributors, City of Fort Worth, Texas Parks & Wildlife, © OpenStreetMap, Microsoft, Esri, TomTom, Garmin, SafeGraph, GeoTechnologies, Inc, METI/NASA, USGS, EPA, NPS, US Census Bureau, USDA, USFWS

COMMISSIONERS COURT
COMMUNICATION

COURT ORDER NUMBER 145789
PAGE 1 OF 10
DATE: 8/19/2025

SUBJECT: **CONSIDERATION OF FINAL PLAT AND CONSTRUCTION BOND – PARK DRIVE SUBDIVISION – PRECINCT 4**

***** CONSENT AGENDA *****

COMMISSIONERS COURT ACTION REQUESTED

It is requested that the Commissioners Court consider for recording in the Plat Records of Tarrant County, Texas, the Final Plat of Lots 1-19, Block 1, Park Drive Subdivision, an addition to Tarrant County, Texas, being 23.19 acres of land situated in the Benjamin Thomas Survey, Abstract No. 1497, Tarrant County, Texas. It is also requested that the Commissioners Court consider accepting the Construction Bond for the construction phase of the Park Drive Subdivision.

BACKGROUND

The subdivision was released from the City of Fort Worth's extraterritorial jurisdiction (ETJ). The ETJ Release is attached and was approved by the City of Fort Worth on April 3, 2024, Tracking No. BAX-24-028.

There is no Federal Emergency Management Agency-designated floodplain associated with this plat.

By this plat, right-of-way for Lark Lane and River Way is dedicated to the public.

A location map of this subdivision in Precinct 4 is attached.

The Construction Bond for the roadway paving and drainage improvements associated with this plat is attached.

The final plat has been reviewed by the Tarrant County Transportation Services and has successfully met the standards contained in the Tarrant County Development Regulations.

FISCAL IMPACT

There is no fiscal impact associated with this item.

SUBMITTED BY	Transportation Services	PREPARED BY:	Nicole Benoit
		APPROVED BY:	Joseph Jackson

Mickey Patterson
Managing Partner
Gorilla Capital Partners, LLC
PO Box 1893 Boyd, TX 76023; 682-307-6287
mickey@gorillacapitalpartners.com

Oct 20, 2025

Tarrant County Transportation Services
200 Taylor St. Ste 305
Fort Worth, TX 76196

RE: Request to Vacate Previous Development Approval in Coordination with New Private Roadway Submittal

To Travis Rosenbaum, PE | Deputy County Engineer,

We are submitting revised development plans for the property located at 9600 Park Dr, which now proposes a privately maintained roadway.

In connection with this updated submittal, we respectfully request that Tarrant County formally vacate the previous approval for the prior public roadway development and release the associated construction bond. The original plan anticipated the County assuming responsibility for the roadway, but under the revised design, the roadway will be privately owned and maintained, eliminating the need for County acceptance and public bonding.

We are submitting the new plans for review concurrently with this request, and we appreciate your assistance in processing both the vacation of the prior approval and the consideration of the updated private roadway design.

Please let us know if any additional documentation or actions are needed to move this request forward.

Thank you for your time and attention.

Sincerely,



Mickey Patterson
Managing Partner
Gorilla Capital Partners, LLC

FINAL PLAT OF A 23.19 ACRE TRACT OF LAND

SITUATED IN
BENJAMIN THOMAS SURVEY, ABSTRACT NO. 1497
TARRANT COUNTY, TEXAS

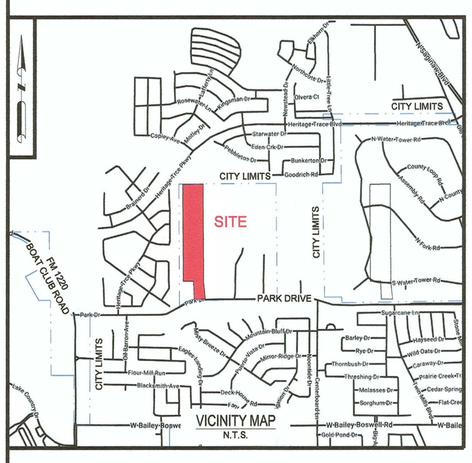

PURPOSE STATEMENT

The purpose of this plat is to define said 23.186 Ac. tract being part of the Benjamin Thomas Survey, Abstract No. 1497.

Notice: Selling a portion of any lot within this addition by metes and bounds is a violation of state law and City ordinance and is subject to fines and withholding of utility services and building permits.

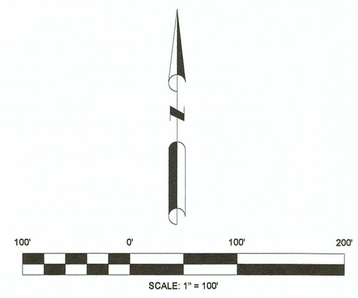

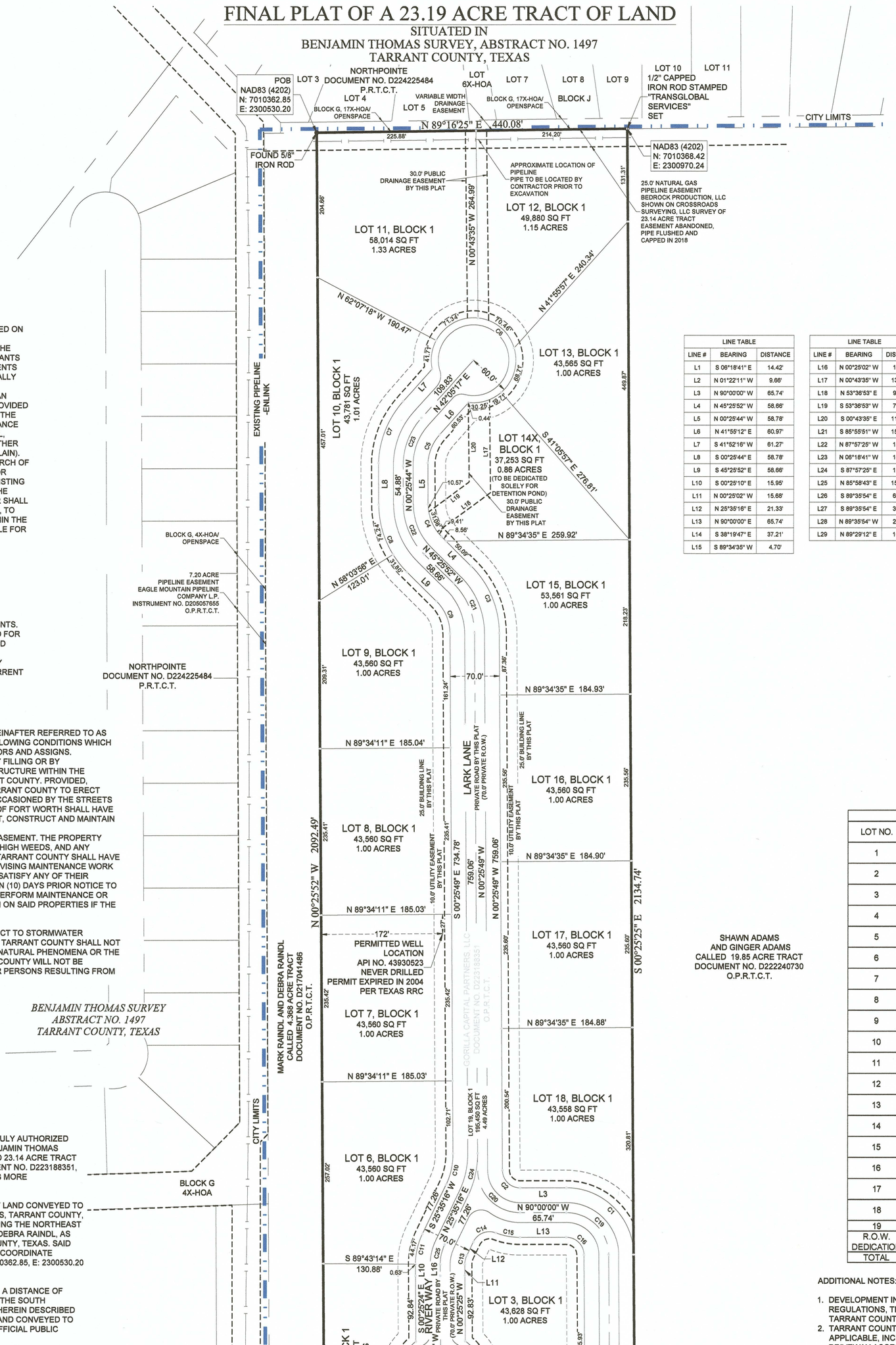

LINE TABLE		
LINE #	BEARING	DISTANCE
L1	S 06°18'41" E	14.42'
L2	N 01°22'11" W	9.66'
L3	N 90°00'00" W	65.74'
L4	N 45°25'52" W	58.66'
L5	N 00°25'44" W	58.78'
L6	N 41°55'12" E	60.97'
L7	S 41°52'16" W	61.27'
L8	S 00°25'44" E	58.78'
L9	S 45°25'52" E	58.66'
L10	S 00°25'10" E	15.95'
L11	N 00°25'02" W	15.68'
L12	N 25°35'16" E	21.33'
L13	N 90°00'00" E	65.74'
L14	S 38°19'47" E	37.21'
L15	S 89°34'35" W	4.70'

LINE TABLE		
LINE #	BEARING	DISTANCE
L16	N 00°25'02" W	15.83'
L17	N 00°43'35" W	131.71'
L18	N 53°36'53" E	93.44'
L19	S 53°36'53" W	71.15'
L20	S 00°43'35" E	112.29'
L21	S 85°55'51" W	153.51'
L22	N 87°57'25" W	16.20'
L23	N 06°18'41" W	10.11'
L24	S 87°57'25" E	17.14'
L25	N 85°58'43" E	153.33'
L26	S 89°35'54" E	66.16'
L27	S 89°35'54" E	35.24'
L28	N 89°35'54" W	25.12'
L29	N 89°29'12" E	10.10'

CURVE TABLE					
CURVE #	ARC LENGTH	RADIUS	DELTA ANGLE	CHORD BEARING	CHORD LENGTH
C1	148.52'	95.00'	89°34'35"	N 45°12'43" W	133.85'
C2	39.08'	25.00'	89°34'11"	N 45°12'55" W	35.22'
C3	106.03'	135.00'	45°00'03"	N 22°55'51" W	103.33'
C4	51.05'	65.00'	45°00'08"	N 22°55'48" W	49.75'
C5	44.35'	66.12'	38°25'48"	N 22°41'26" E	43.52'
C6	302.19'	60.00'	288°33'59"	N 47°40'23" W	70.05'
C7	96.29'	135.46'	40°43'29"	S 21°41'19" W	94.27'
C8	106.03'	135.00'	45°00'08"	S 22°55'48" E	103.33'
C9	51.05'	65.00'	45°00'03"	S 22°55'51" E	49.75'
C10	45.41'	100.00'	26°01'05"	S 12°34'44" W	45.02'
C11	44.80'	100.00'	25°40'07"	S 12°45'13" W	44.43'
C12	302.25'	60.00'	288°37'46"	N 89°34'35" E	70.00'
C13	13.29'	30.00'	25°23'27"	N 12°53'33" E	13.19'
C14	37.37'	25.00'	85°38'42"	N 68°24'38" E	33.99'
C15	35.21'	95.00'	21°13'59"	S 79°23'01" E	35.00'
C16	39.09'	25.00'	89°34'35"	S 45°12'43" E	35.22'

CURVE TABLE					
CURVE #	ARC LENGTH	RADIUS	DELTA ANGLE	CHORD BEARING	CHORD LENGTH
C26	105.96'	610.00'	9°57'09"	N 81°43'08" E	105.83'
C20	93.80'	60.00'	89°34'11"	N 45°12'55" W	84.53'
C21	78.54'	100.00'	45°00'03"	N 22°55'51" W	76.54'
C22	78.54'	100.00'	45°00'08"	N 22°55'48" W	76.54'
C23	74.21'	100.00'	42°31'01"	N 20°49'46" E	72.52'
C24	61.30'	135.00'	26°01'05"	N 12°34'44" E	60.78'
C25	29.03'	65.00'	25°35'16"	N 12°47'38" E	28.79'

BENJAMIN THOMAS SURVEY
ABSTRACT NO. 1497
TARRANT COUNTY, TEXAS

SHAWN ADAMS
AND GINGER ADAMS
CALLED 19.85 ACRE TRACT
DOCUMENT NO. D222240730
O.P.R.T.C.T.

LAND USE SUMMARY

LOT NO.	GROSS SQ.FT.	GROSS ACREAGE	NET ACREAGE	PURPOSE /USE
1	52,169 SQ FT	1.20 ACRES	1.20 ACRES	SINGLE FAMILY
2	43,575 SQ FT	1.00 ACRES	1.00 ACRES	SINGLE FAMILY
3	43,628 SQ FT	1.00 ACRES	1.00 ACRES	SINGLE FAMILY
4	43,659 SQ FT	1.00 ACRES	1.00 ACRES	SINGLE FAMILY
5	43,560 SQ FT	1.00 ACRES	1.00 ACRES	SINGLE FAMILY
6	43,560 SQ FT	1.00 ACRES	1.00 ACRES	SINGLE FAMILY
7	43,560 SQ FT	1.00 ACRES	1.00 ACRES	SINGLE FAMILY
8	43,560 SQ FT	1.00 ACRES	1.00 ACRES	SINGLE FAMILY
9	43,560 SQ FT	1.00 ACRES	1.00 ACRES	SINGLE FAMILY
10	43,781 SQ FT	1.01 ACRES	1.01 ACRES	SINGLE FAMILY
11	58,014 SQ FT	1.33 ACRES	1.24 ACRES	SINGLE FAMILY
12	49,880 SQ FT	1.15 ACRES	1.05 ACRES	SINGLE FAMILY
13	43,565 SQ FT	1.00 ACRES	1.00 ACRES	SINGLE FAMILY
14	37,253 SQ FT	0.86 ACRES	-	DETENTION POND
15	43,561 SQ FT	1.00 ACRES	1.00 ACRES	SINGLE FAMILY
16	43,560 SQ FT	1.00 ACRES	1.00 ACRES	SINGLE FAMILY
17	43,560 SQ FT	1.00 ACRES	1.00 ACRES	SINGLE FAMILY
18	43,558 SQ FT	1.00 ACRES	1.00 ACRES	SINGLE FAMILY
19	195,450 SQ FT	4.49 ACRES	-	R.O.W.
R.O.W. DEDICATION	6,953 SQ FT	0.16 ACRES	-	R.O.W.
TOTAL	1,009,966 SQ FT	23.19 ACRES	17.50 ACRES	

NOTES:

1. BEARINGS, DISTANCES, AREA AND COORDINATES SHOWN HEREON ARE GRID BASED ON "THE TEXAS COORDINATE SYSTEM OF 1983, NORTH CENTRAL ZONE" (4202).
2. THIS SURVEY WAS PERFORMED WITHOUT THE BENEFIT OF A TITLE REPORT AND THE REVIEW OF THE ABSTRACT OF TITLE. THERE MAY BE EASEMENTS AND/OR COVENANTS AFFECTING THIS PROPERTY NOT SHOWN HEREON. LOCATION OF ALL IMPROVEMENTS WAS BEYOND COMMISSIONED SCOPE OF THIS PROJECT AND HAS BEEN SPECIFICALLY OMITTED. VESTING DOCUMENTS NOT FURNISHED FOR THIS SURVEY.
3. ANY REFERENCE TO THE 100 YEAR FLOOD PLAIN OR FLOOD HAZARD ZONES ARE AN ESTIMATE BASED ON THE DATA SHOWN ON THE FLOOD INSURANCE RATE MAP PROVIDED BY FEMA AND SHOULD NOT BE INTERPRETED AS A STUDY OR DETERMINATION OF THE FLOODING PROPENSITIES OF THIS PROPERTY. ACCORDING TO THE FLOOD INSURANCE RATE MAP FOR TARRANT COUNTY, TEXAS, DATED 03/21/2019, MAP NO. 48439C0045L, SUBJECT PROPERTY DESCRIBED HEREIN DOES APPEAR TO LIE WITHIN ZONE X (OTHER AREAS) (AREAS DETERMINED TO BE OUTSIDE THE 0.2% ANNUAL CHANCE FLOODPLAIN).
4. UTILITY LOCATIONS AS SHOWN ON THE BOUNDARY SURVEY ARE BASED ON A SEARCH OF AVAILABLE RECORDS AND INFORMATION PROVIDED BY THE UTILITY COMPANIES OR AGENCIES. UTILITY LOCATIONS SHOWN ARE APPROXIMATE AND THEIR MAY BE EXISTING UTILITIES WHICH ARE NOT DEPICTED ON THIS BOUNDARY SURVEY; THEREFORE THE POSSIBILITY OF CONFLICTS WITH UTILITIES IN SERVICE EXISTS. THE CONTRACTOR SHALL BE RESPONSIBLE TO NOTIFY "ONE CALL" PRIOR TO COMMENCING CONSTRUCTION, TO REQUEST VERIFICATION OF THE LOCATION AND ELEVATION OF ALL UTILITIES WITHIN THE WORK AREA. THE CONTRACTOR SHALL BE SOLELY AND COMPLETELY RESPONSIBLE FOR COSTS INCURRED AS A RESULT TO THE UTILITIES CAUSED BY CONTRACTOR OPERATIONS.
5. EACH LOT WILL BE SERVICED WATER BY INDIVIDUAL WELL.
6. EACH LOT WILL BE SERVICED SEWAGE DISPOSAL BY PRIVATE ON-SITE SEPTIC.
7. CITY SEWER SERVICE IS CURRENTLY NOT AVAILABLE TO THIS PROPERTY.
8. NO ON-SITE SEWAGE FACILITY (OSSF) MAY BE CONSTRUCTED WITHOUT PRIOR APPROVAL OF TARRANT COUNTY TRANSPORTATION DEPARTMENT.
9. SOIL CONDITIONS IN THE AREA MAY REQUIRE AN ALTERNATIVE SYSTEM.
10. ANY NEW WATER WELL MUST COMPLY WITH NORTHERN TRINITY GROUNDWATER CONSERVATION DISTRICT'S HORIZONTAL AND VERTICAL SEPARATION REQUIREMENTS.
11. FUTURE BUYERS SHOULD BE AWARE THAT ADEQUATE SPACE MUST BE RESERVED FOR THE FUTURE ON-STIE SEWAGE FACILITY (OSSF) SO THAT AN APPROPRIATELY SIZED SYSTEM WILL BE ABLE TO MEET ALL THE STATE'S MINIMUM STANDARDS.
12. SHOULD THERE BE ANY PROBLEMS WITH THE EXISTING ON-SITE SEWAGE FACILITY (OSSF), OR IF THE PROVIDED LOCATION IS INCORRECT, A NEW OSSF MEETING CURRENT STANDARDS SHALL BE REQUIRED.

CONDITIONS OF ACCEPTANCE OF DRAINAGE AND FLOODWAY EASEMENTS

THIS PLAT IS PROPOSED BY THE OWNERS OF PROPERTIES DESCRIBED HEREIN (HEREINAFTER REFERRED TO AS "PROPERTY OWNERS) AND IS APPROVED BY TARRANT COUNTY SUBJECT TO THE FOLLOWING CONDITIONS WHICH SHALL BE BINDING UPON THE PROPERTY OWNERS, HIS HEIRS, GRANTEES, SUCCESSORS AND ASSIGNS.
NO OBSTRUCTION TO THE FLOW OF STORMWATER RUN-OFF SHALL BE PERMITTED BY FILLING OR BY CONSTRUCTION OF ANY TYPE OF DAM, BUILDING, BRIDGE, FENCE, OR ANY OTHER STRUCTURE WITHIN THE DRAINAGE EASEMENT SHOWN HEREIN ON THIS PLAT, UNLESS APPROVED BY TARRANT COUNTY. PROVIDED, HOWEVER, IT IS UNDERSTOOD THAT IN THE EVENT IT BECOMES NECESSARY FOR TARRANT COUNTY TO ERECT DRAINAGE FACILITIES IN ORDER TO IMPROVE THE STORM DRAINAGE THAT MAY BE OCCASIONED BY THE STREETS AND ALLEYS IN OR ADJACENT TO THE SUBDIVISION, THEN IN SUCH EVENT, THE CITY OF FORT WORTH SHALL HAVE THE RIGHT TO ENTER SAID DRAINAGE EASEMENT AT ANY POINT OR POINTS TO ERECT, CONSTRUCT AND MAINTAIN ANY FACILITY DEEMED NECESSARY FOR DRAINAGE PURPOSES.
THE PROPERTY OWNERS WILL BE RESPONSIBLE FOR MAINTAINING SAID DRAINAGE EASEMENT. THE PROPERTY OWNERS SHALL KEEP SAID DRAINAGE EASEMENT CLEAN AND FREE OF DEBRIS, SILT, HIGH WEEDS, AND ANY SUBSTANCE WHICH WOULD RESULT IN UNSANITARY OR UNDESIRABLE CONDITIONS. TARRANT COUNTY SHALL HAVE THE RIGHT OF INGRESS AND EGRESS FOR THE PURPOSE OF INSPECTING AND SUPERVISING MAINTENANCE WORK DONE BY THE PROPERTY OWNERS. IF AT ANY TIME THE PROPERTY OWNERS FAIL TO SATISFY ANY OF THEIR AFOREMENTIONED RESPONSIBILITIES OR OBLIGATIONS, TARRANT COUNTY, UPON TEN (10) DAYS PRIOR NOTICE TO THE OWNERS, MAY ENTER SAID DRAINAGE EASEMENT AT ANY POINT OR POINTS TO PERFORM MAINTENANCE OR CLEAN-UP, AND BILL THE PROPERTY OWNERS THE COST INCURRED, OR PLACE A LIEN ON SAID PROPERTIES IF THE BILL IS NOT PAID WITHIN THIRTY (30) DAYS OF ITS MAILING.

SAID DRAINAGE EASEMENT, AS IN THE CASE OF ALL DRAINAGE EASEMENTS, IS SUBJECT TO STORMWATER OVERFLOW AND EROSION TO AN EXTENT WHICH CANNOT BE SPECIFICALLY DEFINED. TARRANT COUNTY SHALL NOT BE HELD LIABLE FOR ANY DAMAGES RESULTING FROM THE OCCURRENCE OF THESE NATURAL PHENOMENA OR THE FAILURE OF ANY FACILITIES WITHIN SAID DRAINAGE EASEMENT. FURTHER, TARRANT COUNTY WILL NOT BE RESPONSIBLE FOR EROSION CONTROL OR ANY DAMAGE TO PRIVATE PROPERTIES OR PERSONS RESULTING FROM THE FLOW OF WATER WITHIN SAID DRAINAGE EASEMENT AND PROPERTIES.

STATE OF TEXAS
COUNTY OF TARRANT

OWNER'S ACKNOWLEDGMENT AND DEDICATION

WHEREAS, MICKEY PATTERSON, ACTING BY AND THROUGH THE UNDERSIGNED, IT'S DULY AUTHORIZED AGENT, IS THE SOLE OWNER OF A 23.186 ACRE TRACT OF LAND SITUATED IN THE BENJAMIN THOMAS SURVEY, ABSTRACT NO. 1497, TARRANT COUNTY, TEXAS, AND BEING ALL OF A CALLED 23.14 ACRE TRACT OF LAND CONVEYED TO GORILLA CAPITAL PARTNERS, LLC, AS RECORDED IN DOCUMENT NO. D223188351, OFFICIAL PUBLIC RECORDS, TARRANT COUNTY, TEXAS. SAID 23.19 ACRE TRACT BEING MORE PARTICULARLY DESCRIBED BY METES AND BOUNDS AS FOLLOWS:

BEGINNING AT A 5/8" IRON ROD FOUND IN THE SOUTH BOUNDARY LINE OF A TRACT OF LAND CONVEYED TO KLB AIV LLC, AS RECORDED IN DOCUMENT NO. D222052099, OFFICIAL PUBLIC RECORDS, TARRANT COUNTY, TEXAS, FOR THE NORTHWEST CORNER OF SAID HEREIN DESCRIBED TRACT, SAME BEING THE NORTHEAST CORNER OF A CALLED 4.368 ACRE TRACT OF LAND CONVEYED TO MARK RAINDL AND DEBRA RAINDL, AS RECORDED IN DOCUMENT NO. D217041486, OFFICIAL PUBLIC RECORDS, TARRANT COUNTY, TEXAS. SAID FOUND 5/8" IRON ROD BEING CALLED THE POINT OF BEGINNING AND HAVING A TEXAS COORDINATE SYSTEM OF 1983, NORTH CENTRAL ZONE (4202), STATE PLANE COORDINATE OF N: 7010362.85, E: 2300530.20 FEET, FOR REFERENCE.

THENCE, WITH THE SOUTH BOUNDARY LINE OF SAID KLB AIV LLC TRACT, N 89°16'25" E, A DISTANCE OF 440.08 FEET TO A 1/2" CAPPED IRON ROD STAMPED "TRANSGLOBAL SERVICES" SET IN THE SOUTH BOUNDARY LINE OF SAID KLB AIV LLC TRACT FOR THE NORTHEAST CORNER OF SAID HEREIN DESCRIBED TRACT, SAME BEING THE NORTHWEST CORNER OF A CALLED 19.85 ACRE TRACT OF LAND CONVEYED TO SHAWN ADAMS AND GINGER ADAMS, AS RECORDED IN DOCUMENT NO. D222240730, OFFICIAL PUBLIC RECORDS, TARRANT COUNTY, TEXAS;

THENCE, WITH THE WEST BOUNDARY LINE OF SAID CALLED 19.85 ACRE TRACT, THE FOLLOWING COURSE AND DISTANCES:

S 00°25'25" E, A DISTANCE OF 2134.74 FEET TO A 1/2" CAPPED IRON ROD STAMPED "TRANSGLOBAL SERVICES" SET FOR CORNER OF SAID HEREIN DESCRIBED TRACT;
S 06°18'41" E, A DISTANCE OF 334.01 FEET TO A 5/8" IRON ROD FOUND FOR CORNER OF SAID HEREIN DESCRIBED TRACT;
S 06°18'41" E, A DISTANCE OF 14.42 FEET TO A MAG NAIL SET IN THE CENTERLINE OF PARK DRIVE FOR THE SOUTHEAST CORNER OF SAID HEREIN DESCRIBED TRACT, SAME BEING THE SOUTHWEST CORNER OF SAID CALLED 19.85 ACRE TRACT;

THENCE, WITH THE THE CENTERLINE OF PARK DRIVE, S 89°32'58" W, A DISTANCE OF 244.14 FEET TO A 2" 'X' CUT IN CONCRETE FOR THE SOUTHWEST CORNER OF SAID HEREIN DESCRIBED TRACT, SAME BEING THE SOUTHEAST CORNER OF A CALLED 2.004 ACRE TRACT OF LAND CONVEYED TO MARK RAINDL AND WIFE, DEBRA F. RAINDL, AS RECORDED IN DOCUMENT NO. D200182108, OFFICIAL PUBLIC RECORDS, TARRANT COUNTY, TEXAS;

THENCE, WITH THE EAST BOUNDARY LINE OF SAID 2.004 ACRE TRACT, THE FOLLOWING COURSE AND DISTANCES:

N 01°22'11" W, A DISTANCE OF 9.66 FEET TO A 5/8" CAPPED IRON ROD "HANSON RPLS 4786" FOUND FOR CORNER OF SAID HEREIN DESCRIBED TRACT;
N 02°03'17" W, A DISTANCE OF 376.72 FEET TO A 5/8" CAPPED IRON ROD "HANSON RPLS 4786" FOUND FOR CORNER OF SAID HEREIN DESCRIBED TRACT, SAME BEING THE NORTHEAST CORNER OF SAID CALLED 2.004 ACRE TRACT;

THENCE, WITH THE NORTH BOUNDARY LINE OF SAID 2.004 ACRE TRACT, S 89°40'59" W, A DISTANCE OF 220.52 FEET TO A 5/8" CAPPED IRON ROD "HANSON RPLS 4786" FOUND IN THE EAST BOUNDARY LINE OF SAID CALLED 4.368 ACRE TRACT FOR CORNER OF SAID HEREIN DESCRIBED TRACT, SAME BEING THE NORTHWEST CORNER OF SAID CALLED 2.004 ACRE TRACT;

THENCE, WITH THE EAST BOUNDARY LINE OF SAID 4.368 ACRE TRACT, N 00°25'52" W, A DISTANCE OF 2092.49 FEET TO THE POINT OF BEGINNING, CONTAINING 23.19 ACRES OR 1,009,966 SQUARE FEET OF LAND, MORE OR LESS.

NOW THEREFORE, KNOW ALL MEN BY THESE PRESENTS:

I, MICKEY PATTERSON, BEING THE OWNER OF THE DESCRIBED PROPERTY DO HEREBY ADOPT THE ACCOMPANYING PLAT AS MY PLAN FOR SUBDIVIDING SAME, TO BE KNOWN AS AS LOTS 1 - 19, BLOCK 1, PARK DRIVE SUBDIVISION, TARRANT COUNTY, TEXAS, AND DO HEREBY DEDICATE TO THE USE OF THE PUBLIC THE EASEMENTS SHOWN HEREON.

FURTHERMORE, I CERTIFY THAT ALL PARTIES WITH AN INTEREST IN THE TITLE TO THIS PROPERTY HAVE JOINED IN THE THIS DEDICATION.

THE 25th DAY OF, November, 2025

BY: MICKEY PATTERSON

STATE OF TEXAS
COUNTY OF TARRANT

BEFORE ME, THE UNDERSIGNED AUTHORITY APPEARED, MICKEY PATTERSON, WHO SWORE ON THEIR OATH THE ABOVE AND FOREGOING SWORN STATEMENT OF OWNERSHIP WAS TRUE AND CORRECT.

GIVEN UNDER MY HAND AND SEAL OF OFFICE ON THIS

THE 25 DAY OF, November, 2025

NOTARY PUBLIC
STATE OF TEXAS

TAMMIE LYNN CROLE
Notary Public, State of Texas
Comm. Expires 04-25-2027
Notary ID 5554893

4-25-2027
NOTARY EXPIRATION DATE

Note: The undersigned owner(s) (MICKEY PATTERSON) hereby Waive any claim for damages against the City occasioned by the establishment of grades or the alteration of the surface of any portion of existing streets and alleys to conform to the grades established in the subdivision.

SURVEYOR'S CERTIFICATE

I hereby certify that this plat was prepared from a survey made on the ground under my supervision and is in accordance with the Texas Engineering and Land Practice Act and Rules Concerning Practice and Licensure and the Tarrant County Development Regulations Manual.

(JAMES C. YARGER), Surveyor

Texas R.P.L.S. No. 5854

Date: NOV 25, 2025

STATE OF TEXAS
REGISTERED
JAMES CURTIS YARGER
5854
PROFESSIONAL
LAND SURVEYOR

COMMISSIONERS COURT
TARRANT COUNTY, TEXAS

PLAT APPROVAL DATE: _____

BY: _____
☐ CLERK OF COMMISSIONERS COURT
☐ TRANSPORTATION SERVICES DEPARTMENT

NOTE:
CONSTRUCTION NOT COMPLETED WITHIN TWO YEARS OF THE RECORDING DATE SHALL BE SUBJECT TO CURRENT COUNTY SUBDIVISION STANDARDS AND REGULATIONS.

1-800-344-8377
WWW.TEXASONECALL.COM
TEXAS ONE CALL SYSTEM

LEGEND
- SECTION LINE
- ADJOINER PROPERTY LINE
- CITY LIMITS LINE
- PROPERTY LINE
- PERMANENT EASEMENT
- BUILDING SETBACK LINE
- EXISTING PIPELINE
- RIGHT-OF-WAY DEDICATION
- FOUND MONUMENT
- SET MONUMENT
- BEARING CHANGE
- (R) RECORD
- (M) MEASURED
- EXISTING WATER WELL
- (O.P.R.T.C.T.) OFFICIAL PUBLIC RECORDS, TARRANT COUNTY, TEXAS
- (D.R.T.C.T.) DEED OF RECORDS, TARRANT COUNTY, TEXAS

OWNER'S INFORMATION

NAME: MICKEY PATTERSON, (MANAGING PARTNER)
COMPANY: GORILLA CAPITAL PARTNERS, LLC
ADDRESS: P.O. BOX 1893
CITY, STATE, ZIP: BOYD, TX 76023
PHONE: (682) 268-1914
EMAIL: mickey@gorillacapitalpartners.com

ENGINEER'S INFORMATION

NAME: EVOLVING TEXAS
ADDRESS: 420 THROCKMORTON STREET SUITE 620
CITY, STATE, ZIP: FORT WORTH, TX 76102
PHONE: (817) 529-2700
EMAIL: Samantha@evolvingtexas.com

SURVEYOR'S INFORMATION

NAME: JAMES C. YARGER
ADDRESS: 201 WEST WALL STREET, SUITE 325
CITY, STATE, ZIP: MIDLAND, TX 79701
PHONE: (817) 529-1180
EMAIL: Curtis.Yarger@transgloballlc.com
TBPELS FIRM# 10194245

Plat recorded in
Instrument # _____ Year _____
Drawer _____ Slide _____
_____
Date
_____
County Clerk, Tarrant County, Texas
_____
Deputy

TRANSGLOBAL SERVICES LLC
TBPELS FIRM# 10194245
201 West Wall Street, Suite 325
Midland, TX 79701
(817) 529-1180 ~ Fax (817) 529-1181

COUNTY CASE NUMBER TCP-25-014
FINAL PLAT
OF A 23.19 ACRE / 1,009,966 S.F.
TRACT OF LAND

LOTS 1 THRU 19, BLOCK 1
PARK DRIVE SUBDIVISION

SITUATED IN
BENJAMIN THOMAS SURVEY
ABSTRACT NO. 1497
TARRANT COUNTY, TEXAS

#	DATE	BY:	DESCRIPTION	CHK
3	11/17/25	NH	ADDED/UPDATED NOTES PER CITY	JCY
2	10/17/25	NH	REVISED OWNER'S DEDICATION & UPDATED PAVEMENT LINE WORK	JCY
1	10/13/25	NH	REVISED R.O.W. DEDICATION	JCY

PROJECT NO. 21882

DRAWN BY: NH	DATE: 06/16/25	DWG. NO. 21882_PARK DRIVE SUBDIVISION PLAT_REV 3	REV. 3
CHECKED BY: JCY	DATE: 06/16/25		
SCALE: 1"=100'	PAGE 1 OF 1		

TARRANT COUNTY TAX OFFICE

100 E. Weatherford, Room 105 • Fort Worth, Texas 76196-0301 • 817-884-1100
taxoffice@tarrantcountytx.gov
In God We Trust

RICK D. BARNES
Tax Assessor-Collector

TAX CERTIFICATE FOR ACCOUNT : 00040216713
AD NUMBER: A1497 5A01 A1
CERTIFICATE NO : 145153672

DATE : 11/11/2025
FEE : $10.00

COLLECTING AGENCY

RICK BARNES
PO BOX 961018
FORT WORTH TX 76161-0018

REQUESTED BY

GCP NTX INVESTMENTS LLC

PO BOX 1893
BOYD TX 76023

PROPERTY DESCRIPTION

THOMAS, BENJAMIN SURVEY ABST
RACT 1497 TRACT 5A1 & 5A1A3 AG

0000000 PARK DR
17.1 ACRES

PROPERTY OWNER

GCP NTX INVESTMENTS LLC

PO BOX 1893
BOYD TX 76023

YEAR	TAX UNIT	AMOUNT DUE
2025	Tarrant County	$877.00
2025	JPS HEALTH NETWORK	$777.15
2025	TARRANT COUNTY COLLEGE	$528.84
2025	EMERGENCY SERVICE DISTRICT #1	$350.18
2025	EAGLE MOUNTAIN/SAGINAW ISD	$5,867.25
	TOTAL	$8,400.42

ISSUED TO : GCP NTX INVESTMENTS LLC
ACCOUNT NUMBER: 00040216713
TOTAL CERTIFIED TAX: $8,400.42

As Deputy Tax Assessor/Collector for Tarrant County , I do hereby certify pursuant to Texas Property Tax Code Section 31.08 that the delinquent taxes, penalties and attorney fees due for only the above described property are as listed below according to the current tax records. Additional taxes may become due on the described property, which are not reflected herein, if the said described property has or is receiving any special statutory valuations that may trigger tax rollback provisions and other changes to the appraisal roll made subsequent to the issuance of this certificate.

This certificate applies to ad valorem taxes only and does not apply to any special assessment levies.

Lena Gonzalez Deputy

TAX ASSESSOR-COLLECTOR
TARRANT COUNTY, TEXAS

TARRANT COUNTY TAX OFFICE

100 E. Weatherford, Room 105 • Fort Worth, Texas 76196-0301 • 817-884-1100
taxoffice@tarrantcountytx.gov
In God We Trust

RICK D. BARNES
Tax Assessor-Collector

TAX CERTIFICATE FOR ACCOUNT : 00006616453
AD NUMBER: A1497 5A01 E1
CERTIFICATE NO : 145153670

DATE : 11/11/2025
FEE : $10.00

COLLECTING AGENCY

RICK BARNES
PO BOX 961018
FORT WORTH TX 76161-0018

REQUESTED BY

GCP NTX INVESTMENTS LLC

PO BOX 1893
BOYD TX 76023

PROPERTY DESCRIPTION

THOMAS, BENJAMIN SURVEY ABST
RACT 1497 TRACT 5A1 & 5A1A3 HS

0009600 PARK DR
5 ACRES

PROPERTY OWNER

GCP NTX INVESTMENTS LLC

PO BOX 1893
BOYD TX 76023

YEAR	TAX UNIT	AMOUNT DUE
2025	Tarrant County	$1,504.76
2025	JPS HEALTH NETWORK	$1,333.44
2025	TARRANT COUNTY COLLEGE	$907.38
2025	EMERGENCY SERVICE DISTRICT #1	$600.84
2025	EAGLE MOUNTAIN/SAGINAW ISD	$10,067.05
	TOTAL	$14,413.47

ISSUED TO : GCP NTX INVESTMENTS LLC
ACCOUNT NUMBER: 00006616453
TOTAL CERTIFIED TAX: $14,413.47

As Deputy Tax Assessor/Collector for Tarrant County , I do hereby certify pursuant to Texas Property Tax Code Section 31.08 that the delinquent taxes, penalties and attorney fees due for only the above described property are as listed below according to the current tax records. Additional taxes may become due on the described property, which are not reflected herein, if the said described property has or is receiving any special statutory valuations that may trigger tax rollback provisions and other changes to the appraisal roll made subsequent to the issuance of this certificate.

This certificate applies to ad valorem taxes only and does not apply to any special assessment levies.

Lena Gomez Deputy

TAX ASSESSOR-COLLECTOR
TARRANT COUNTY, TEXAS

TARRANT COUNTY TAX OFFICE

100 E. Weatherford, Room 105 • Fort Worth, Texas 76196-0301 • 817-884-1100
taxoffice@tarrantcountytx.gov
In God We Trust

RICK D. BARNES
Tax Assessor-Collector

TAX CERTIFICATE FOR ACCOUNT : 00006769195
AD NUMBER: A1497 5A01 20
CERTIFICATE NO : 145153665

DATE : 11/11/2025
FEE : $10.00

COLLECTING AGENCY

RICK BARNES
PO BOX 961018
FORT WORTH TX 76161-0018

REQUESTED BY

GCP NTX INVESTMENTS LLC

PO BOX 1893
BOYD TX 76023

PROPERTY DESCRIPTION

THOMAS, BENJAMIN SURVEY ABST
RACT 1497 TRACT 5A1 & 5A1A3 20
06 PATRIOT 30 X 52 LB# NTA1409
902 ALAMO
0009614 PARK DR
1 ACRES

PROPERTY OWNER

GCP NTX INVESTMENTS LLC

PO BOX 1893
BOYD TX 76023

YEAR	TAX UNIT	AMOUNT DUE
2025	Tarrant County	$109.38
2025	JPS HEALTH NETWORK	$96.92
2025	TARRANT COUNTY COLLEGE	$65.95
2025	EMERGENCY SERVICE DISTRICT #1	$43.67
2025	EAGLE MOUNTAIN/SAGINAW ISD	$731.74
	TOTAL	$1,047.66

ISSUED TO : GCP NTX INVESTMENTS LLC
ACCOUNT NUMBER: 00006769195
TOTAL CERTIFIED TAX: $1,047.66

As Deputy Tax Assessor/Collector for Tarrant County , I do hereby certify pursuant to Texas Property Tax Code Section 31.08 that the delinquent taxes, penalties and attorney fees due for only the above described property are as listed below according to the current tax records. Additional taxes may become due on the described property, which are not reflected herein, if the said described property has or is receiving any special statutory valuations that may trigger tax rollback provisions and other changes to the appraisal roll made subsequent to the issuance of this certificate.

This certificate applies to ad valorem taxes only and does not apply to any special assessment levies.

Deputy

TAX ASSESSOR-COLLECTOR
TARRANT COUNTY, TEXAS

TARRANT COUNTY
COMMISSIONERS COURT COMMUNICATION

Department: Transportation **Prepared By:** Sarah VanTassel **Approved By:** Joseph Jackson

SUBJECT:

Consideration of Final Plat with Variance - Harmon Road Addition - Precinct 4

***** CONSENT AGENDA *****

COMMISSIONERS COURT ACTION REQUESTED

It is requested that the Commissioners Court grant a variance from the Tarrant County Development Manual relating to the certification of groundwater availability requirement. In addition and contigent to the variance approval, it is requested that the Commissioners Court consider for recording in the Plat Records of Tarrant County, Texas, the Final Plat of Lots 1-3, Block 1, Harmon Road Addition, an addition to Tarrant County, Texas; being five acres of land, situated in the J.M. Goodwin Survey, Abstract No. 611, Tarrant County, Texas.

BACKGROUND

Per TLGC 232.0032, the Tarrant County Development Regulations require that final plats comprised of subdivided lots using on-site water wells submit a certification of groundwater availability prepared by a licensed Engineer or Geoscientist. The plat application has requested a variance from the requirement to obtain a certification of groundwater availability referenced in the Tarrant County Development Regulations.

The requested variance supports the proposed plat consisting of three (3) lots. Lot 1 is 1.229 acres in size and Lot 2 is 1.269 acres in size. Lot 3 is 2.364 acres in size with an established water well that will provide water to all three (3) lots per a Declaration of Water Well Easement Agreement, recorded in instrument number D225128748, Official Public Records, Tarrant County, Texas.

The Texas Commission on Environmental Quality and the Northern Trinity Groundwater Conservation District were involved with the plat review and acknowledged the need for the Declaration of Water Well Easement Agreement.

The purpose for platting is to subdivide one un-platted commercial lot into three (3) platted commercial lots.

The subdivision was released from the City of Fort Worth extraterritorial jurisdiction (ETJ). The ETJ Release is attached and was approved by the City of Fort Worth on December 14, 2024, Tracking No. BAX-24-080.

There is no Federal Emergency Management Agency designated floodplain associated with this plat.

A location map of this subdivision in Precinct 4 is attached.

A copy of the variance request letter from the applicant and the Declaration of Water Well Easement Agreement is attached.

A copy of the Request for Variance and Final Plat Approval form, acknowledged by Precinct 4 Commissioner Manny Ramirez, is attached.

Apart from the variance request, the proposed final plat has been reviewed by Tarrant County Transportation Services and has successfully met all other standards contained in the Tarrant County Development Regulations Manual.

FISCAL IMPACT

There is no fiscal impact associated with this item.

Attachments

Harmon Road Addition.TCP-25-003.UNINC-Application.ETJ Release-03272025.pdf

Harmon Road Addition.TCP-25-003.UNINC-Variance Request-08202025.pdf

Harmon Rd Add.TCP-25-003.UNINC-Request for Variance Approval.TCTS Signed.Comm'r Ack-11242025.pdf

Harmon Road Additon Court Map.pdf

Harmon Addition Plat.pdf

Harmon Addition Tax Document.pdf

December 17, 2024

W.A. Landreth III
2627 Tillar St.,
Fort Worth, Texas 76107

RE: Release of Area from the City of Fort Worth's Extraterritorial Jurisdiction (ETJ) by Petition of Landowner or Resident Pursuant to Chapter 42, Subchapter D of the Texas Local Government Code Tracking No. BAX-24-080

Dear W.A. Landreth III

On November 14, 2024 , the City of Fort Worth received a petition to release an area from the City of Fort Worth's extraterritorial jurisdiction pursuant to Chapter 42, Subchapter D of the Texas Local Government Code. A description of the area that was included in the petition is attached hereto as Exhibit "A". The City of Fort Worth has reviewed the petition and has determined that the petition complies with state law. Therefore, the area described in Exhibit "A" is released from the City of Fort Worth's extraterritorial jurisdiction.

Release from the Fort Worth Extraterritorial Territorial Jurisdiction (ETJ) means that your property will no longer fall under limited jurisdictional authority granted by the State of Texas to the City of Fort Worth. The City of Fort Worth will have no oversight in matters including but not limited to regional planning of services such as the water, sewer, and transportation networks and the general health, safety, and welfare of persons residing in the property(s) included in the petition. Please note that removal from the ETJ prevents the option to receive City of Fort Worth services in the future including police and fire services.

Any area that has been released from the City of Fort Worth's ETJ may not be included in the ETJ or corporate boundaries of the City of Fort Worth unless the owners of the area subsequently request that the area be included in the City of Fort Worth's ETJ or corporate boundaries.

Sincerely,

Dalton J. Harrell
Dalton J. Harrell (Dec 2, 2024 10:08 CST)

D.J. Harrell
Director
Development Services Department
Office: 817-392-8032
Email: d.j.harrell@fortworthtexas.gov

BAX-24-080

Exhibit A

Approximately 5.0 Acres Adjacent Council District 10

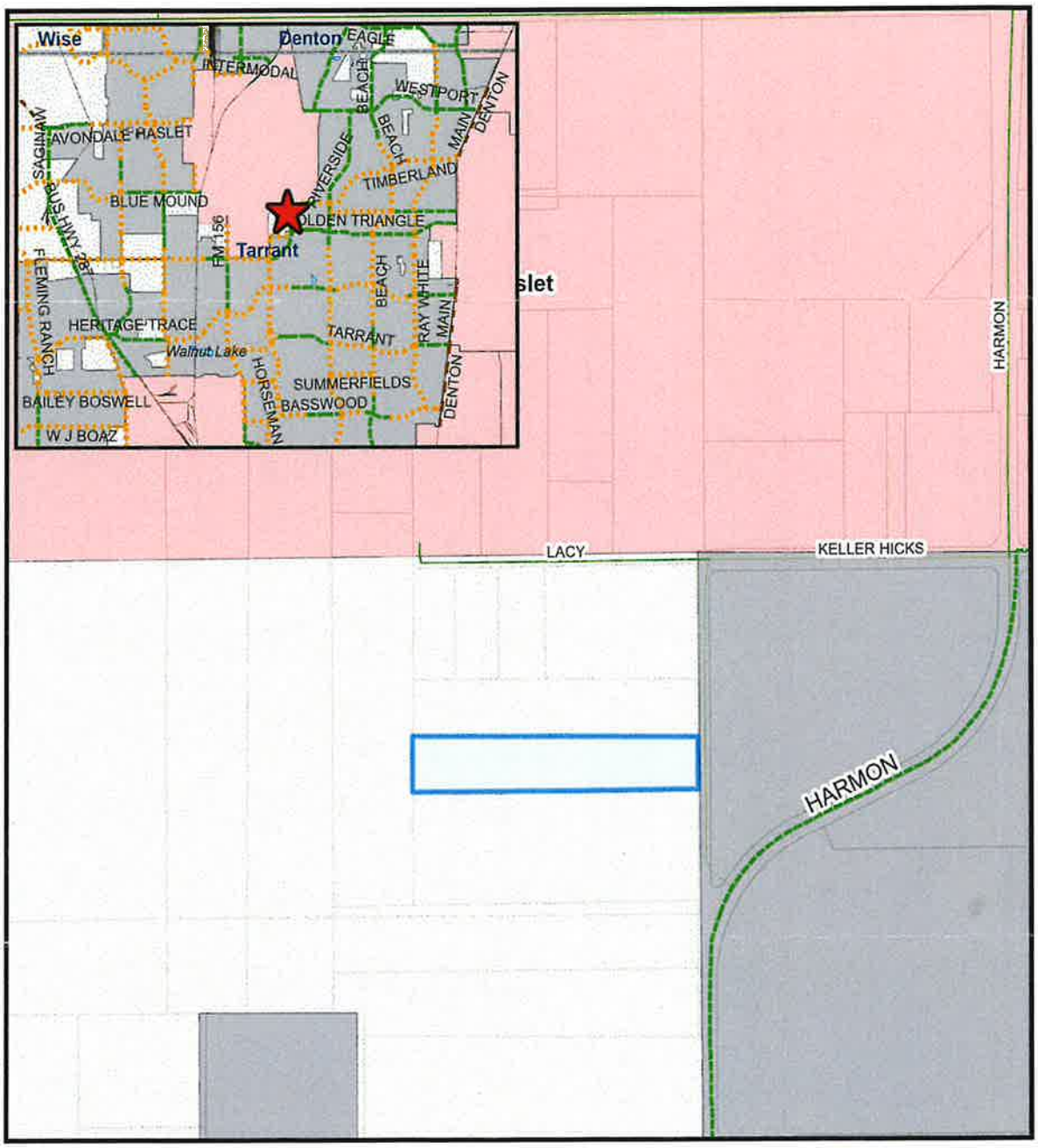

Fort Worth

DESIGNATION

- Full Purpose
- Limited Purpose
- Extraterritorial Jurisdiction
- County Boundaries
- Adjacent Cities
- Subject Property
- Naval Air Station 5-Mile Buffer

0 300 600 Feet

1:6,000

FORT WORTH.

Development Services Department
11/27/2024

COPYRIGHT 2024 CITY OF FORT WORTH UNAUTHORIZED REPRODUCTION IS A VIOLATION OF APPLICABLE LAWS. THIS DATA IS TO BE USED FOR A GRAPHICAL REPRESENTATION ONLY. THE ACCURACY IS NOT TO BE TAKEN / USED AS DATA PRODUCED FOR ENGINEERING PURPOSES OR BY A REGISTERED PROFESSIONAL LAND SURVEYOR. THE CITY OF FORT WORTH ASSUMES NO RESPONSIBILITY FOR THE ACCURACY OF SAID DATA.

TILLAR HARMON ROAD PARTNERS, LP
2627 Tillar Street, Suite 111
Fort Worth, TX 76107

August 19, 2025

Tarrant County Commissioners Court
100 E. Weatherford St.
Fort Worth, TX 76196

RE: Variance Request for Groundwater Availability Certification from Tarrant County Commissioners Court (the "Commissioners Court") regarding the Property located at 13181 Harmon Rd., Fort Worth, TX 76177 and as further described on Exhibit "A" attached hereto and incorporated herein by reference (the "Property"), said Property being owned by Tillar Harmon Road Partners, LP ("Tillar")

To Whom It May Concern:

Please allow this letter to serve as Tillar's official request for a variance in regard to the Groundwater Availability Certification for the Property. Tillar intends to plat the Property into three separate lots, and one existing water well will service all three lots. We have registered the existing well with the Northern Trinity Groundwater Conservation District as well as received confirmation from the Texas Commission Exchange on Environmental Quality that the existing water well is not designated as a public water supply.

There are currently five buildings on the Property, and 11 individuals are utilizing the Property. Based on the Property's historical water service since 2014, Tillar does not anticipate any issues with water availability. Tillar has no current plans to construct additional buildings on the Property.

A Water Well Easement Agreement was recorded to guarantee shared water usage across the three lots. A copy of the Water Well Easement Agreement is attached hereto as Exhibit "B" and incorporated herein by reference.

Thank you in advance for your time and consideration.

Sincerely,

TILLAR HARMON ROAD PARTNERS, LP,
a Texas limited partnership

By: Tillar GP I, LLC, general partner

By: W.A.L
Name: W A LANDRETH
Title: MANAGER OF GENERAL PARTNER

Exhibit "A"

5.00 acres situated in the J.M. GOODWIN SURVEY, Abst. No. 611, Tarrant County, Texas, being the tract described in deed to Danny Lee Ratliff by deed recorded in Document Number D214153642, County Clerk's Records, Tarrant County, Texas, and being more particularly described, as follows:

Beginning at a point in HARMON ROAD (a Variable Width Right-of-Way), the southeast corner of said Ratliff tract, said point being S 89°40'00" E, 60.54 feet from the northeast corner of Lot 1, Block 1, LACY ADDITION, an Addition to Tarrant County, Texas according to the Plat thereof recorded in Plat Cabinet B. Slide 978, Plat Records, Tarrant County, Texas;

THENCE N 89°40'00" W, at 60.54 feet passing a 5/8" iron rod found, the northeast corner of said Lot 1, continuing along the common line of said Ratliff tract and Lot 1, in all, a distance of 1088.07 feet to a capped 5/8" iron rod in concrete found, the northwest corner of said Lot 1, in the east line of the tract described in deed to Cowboy Church of Tarrant County by deed recorded in Document Number D217085850, County Clerk's Records, Tarrant County, Texas;

THENCE N 00°14'41" E, along the common line of said Ratliff and Cowboy Church of Tarrant County tracts, 200.28 feet to a 5/8" iron rod found for the southwest corner of the tract described in deed to Stepp/WCJ Investments, LLC by deed recorded in Document Number D209171243, County Clerk's Records, Tarrant County, Texas;

THENCE S 89°40'00" E, along the common line of said Ratliff and Stepp/WCJ Investments, LLC tracts, 1086.85 feet to the northeast corner of said Ratliff tract, from which a capped 1/2" iron rod found for the southeast corner of Lot 3, Block 4, LACY ACRES, an Addition to Tarrant County, Texas according to the Plat thereof recorded in Plat Cabinet A, Slide 4256, Plat Records, Tarrant County, Texas, bears N 08°37'17" W. 203.91 feet;

THENCE S 00°06'15" E, along the east line of said Ratliff tract, 200.29 feet to the POINT OF BEGINNING and containing 5.00 acres of land.

Exhibit "B"

Attached.

D225128748 07/16/2025 09:03 AM Page: 1 of 17 Fee: $84.00 Submitter: Vaquero Ventures Management, LLC
Electronically Recorded by Tarrant County Clerk in Official Public Records
MARY LOUISE NICHOLSON
COUNTY CLERK

Recording Requested by and

After Recording Return to:
Tillar Harmon Road Partners, LP
2627 Tillar Street, Suite 111
Fort Worth, TX 76107

DECLARATION OF WATER WELL EASEMENT AGREEMENT

This Declaration of Water Well Easement Agreement (the "**Declaration**") is made effective this 15 day of July, 2025 (the "**Effective Date**"), by Tillar Harmon Road Partners, LP, a Texas limited partnership ("**Declarant**").

WITNESSETH:

WHEREAS, Declarant intends to develop the Property to consist of multiple lots;

WHEREAS, the first lot consists of that certain real property located in Tarrant County, Texas, which is more particularly described on Exhibit B, attached hereto and incorporated herein by reference ("**Parcel 1**");

WHEREAS, the second lot consists of that certain real property located in Tarrant County, Texas, which is more particularly described on Exhibit C, attached hereto and incorporated herein by reference ("**Parcel 2**");

WHEREAS, the third lot consists of that certain real property located in Tarrant County, Texas, which is more particularly described on Exhibit D, attached hereto and incorporated herein by reference ("**Parcel 3**") (Parcel 1, Parcel 2 and Parcel 3 are hereinafter sometimes individually referred to as a "**Parcel**" and collectively, the "**Parcels**");

WHEREAS, Declarant is the owner and operator of a potable water well, pump facilities and other accessories thereto and appurtenant structures (collectively, the "**Well**"), located on Parcel 3;

WHEREAS, the Declarant desire to provide for the non-exclusive shared use, consummation and withdrawal of water from the Well;

NOW, THEREFORE, Declarant hereby declares, for and on behalf of itself and all subsequent holders of fee title of a Parcel (each, an "**Owner**") and its respective tenants, members, directors, franchisees, officers, employees, contractors, agents, customers and other invitees (collectively, the "**Permittees**"), that the Parcels are now held and shall from and after the date hereof be acquired, held, conveyed, hypothecated, encumbered, leased, used, occupied and improved subject to the following covenants, conditions, and restrictions, as follows:

1. **Recitals**. The recitals set forth above are true and correct and are hereby incorporated by reference.

2. **Water Rights**.

(a) **Grant of Water Rights**. Declarant hereby establishes a non-exclusive right for each Owner, for itself and its Permittees, to use, consume, and withdraw water from the Well by water conduit line connected to and extending from the Well across the Owner's respective Parcel to its improvements located thereon (the "**Water Rights**"). Such use shall be in common with the use of the other Owners.

(b) **Maintenance**. The Owner of Parcel 3 (the "**Well Property Owner**") shall use commercially reasonable efforts to ensure that the Well is operational, repaired, updated and maintained, which such responsibility includes the portion of the Well which extends from the Well only to such connecting appurtenance benefiting the Owners of the Parcel 1 and Parcel 2 (individually, a "**Non-Well Property Owner**" and collectively, the "**Non-Well Property Owners**"). If the Well Property Owner fails, within thirty (30) days after receipt of demand by a Non-Well Property Owner, to commence in good faith and proceed with commercially reasonable diligence to effect such maintenance and repairs which are commercially reasonable and necessary for the operation of the Well, said Non-Well Property Owner shall be entitled to perform such maintenance and repairs and obtain reimbursement from the Well Property Owner therefor in the manner set forth in Subsection 2.(c) below; provided, however, in the event of a maintenance emergency (including, but not limited to, any event that materially interferes with the use of the Well), thirty (30) days prior written notice is not required and the Non-Well Property Owner shall have the right to immediately perform and complete such maintenance obligation on behalf of Well Property Owner and obtain reimbursement from the Well Property Owner therefor in the manner set forth in Subsection 2.(c) below.

(c) **Expenses**. The Non-Well Property Owner's shall be responsible to pay to Well Property Owner its Proportionate Share (defined below) of the reasonable, actual out-of-pocket expenses of maintenance, repair and replacement of the Well and also any costs, fees, taxes, and assessments as levied by federal, state, county or municipal bodies (collectively, the "**Well Expenses**"). As used herein "**Proportionate Share**" shall mean 33.33% of the Well Expenses. The Non-Well Property Owner's shall reimburse Well Property Owner, within thirty (30) days of receipt of invoice together with commercially reasonable documentation of the same for the Non-Well Property Owner's Proportionate Share of the Well Expenses, which shall be itemized on such invoice to identify each item constituting a Well Expense.

(d) **Electrical Power**. The Well Property Owner shall cause and provide electrical power to the Well pump sufficient to operate such pump at all times at the Well Property Owner's sole cost and expense.

(e) **No Obstruction of Well Access**. There shall not be any obstructions (except for ordinary maintenance and repair), fences, curbs or landscaping that would in any way impede an Owner's Water Rights. Provided, however, that nothing in this paragraph shall prohibit or limit in any way the placement of improvements and/or the redevelopment now or in the future on the Parcels so long as such development does not change the location of or interfere with the Well.

(f) **Condemnation.** In the event of a condemnation or transfer in lieu of

condemnation affecting the Well, the Well Property Owner shall, with all due diligence, repair and restore or cause to be repaired and restored the Well, as applicable to its former condition (or as near thereto as is possible under the circumstances) as soon as reasonably practicable following the date of the condemnation. The Non-Well Property Owner's shall be responsible to pay to Well Property Owner its Proportionate Share of the Well Expenses for the repair and restoration of the Well resulting from condemnation under the same provisions of cost sharing provided in Section 2.(b) and 2.(c) above.

(g) **Damage or Destruction.** In the event of damage or destruction affecting the Well, the Well Property Owner shall, with all due diligence, repair and restore or cause to be repaired and restored the portions of the Well, as applicable to its former condition (or as near thereto as is possible under the circumstances) as soon as reasonably practicable following the date of the casualty. The Non-Well Property Owner's shall be responsible to pay to Well Property Owner its Proportionate Share of the Well Expenses for the repair and restoration of the Well resulting from damage or destruction under the same provisions of cost sharing provided in Section 2.(b) and 2.(c) above.

(h) **The Non-Well Property Owner Water Line**. The Non-Well Property Owner's shall be responsible, at its sole cost and expense, for any construction, maintenance, updating and repair of the water line running to its respective Parcel (the "**Water Line**"), including all material, labor and any permits required. The Water Line shall connect to the Well and have at such point of connection a cutoff valve to be maintained by the respective Non-Well Property Owner. The Non-Well Property Owner shall be responsible for any necessary maintenance and upkeep, licenses and permits for the Non-Well Property Owner's Water Line beginning at the cutoff valve and extending and continuing to the Non-Well Property Owner's Parcel. In the event the Water Line on Parcel 2 also Serves Parcel 1, the Parcel 2 Owner shall be responsible for the construction, maintenance, updating and repair of the same, and the Parcel 1 Owner shall be responsible to pay to the Parcel 2 Owner 50% of the Well Expenses for the construction, maintenance, updating and repair of said Water Line under the same provisions of cost sharing provided in Section 2.(b) and 2.(c) above.

3. **Grant of Easements**.

(a) **Water Well Easement**. The Owner of Parcel 1 shall have the right, for the benefit of and as an appurtenance to the Parcel 1, a perpetual and non-exclusive easement, to connect to and use the Well in accordance with the terms of this Declaration and to construct, install, maintain, repair, replace and lay its respective Water Line and appurtenances necessary in connection therewith, on, over, across, and through Parcel 2 and Parcel 3 in the area which is five (5) feet on each side of the actual center line of the Water Line as installed on the Effective Date (the "**Parcel 1 Water Well Easement Area**"). The Owner of Parcel 2 shall have the right, for the benefit of and as an appurtenance to the Parcel 2, a perpetual and non-exclusive easement, to connect to and use the Well in accordance with the terms of this Declaration and to construct, install, maintain, repair, replace and lay its respective Water Line and appurtenances necessary in connection therewith, on, over, across, and through Parcel 3 in the area which is 5 feet on each side of the actual center line of the Water Line as installed on the Effective Date (the "**Parcel 2 Water Well Easement Area**") (the Parcel 1 Water Well Easement Area and Parcel 2 Water Well Easement Area are hereinafter sometimes collectively referred to as a "**Water Well Easement**").

The Owners agree that the Owners and their Permittees shall not utilize their respective Parcel in any manner that may adversely affect the use and enjoyment by another owner of the Water Well Easement or Water Lines.

(b) **Electric Line Easement**. The Owner of Parcel 3 shall have the right, for the benefit of and as an appurtenance to the Parcel 3, a perpetual and non-exclusive easement for underground electric supply, consisting of wires, cables, conduits and all necessary equipment and appurtenances thereto required to provide electric power for the operation of the Well (the "**Electric Lines**"), on, over, across, and through Parcel 1 and Parcel 2 in the area which is five (5) feet on each side of the actual center line of the Electric Lines as installed on the Effective Date (the "**Electric Easement Area**").The Owners agree that the Owners and their Permittees shall not utilize their respective Parcel in any manner that may adversely affect the use and enjoyment by another owner of the Electric Easement Area or Electric Lines.

(c) **Access**. The Parties shall have the right to do whatever is necessary and required for the enjoyment of their respective interest in and to said Well, including the right of access, ingress and egress to and from and over and upon the Parcel's at reasonable times as may be reasonable and necessary for construction, maintenance, or repairs.

4. **Public Water System**. To the extent that the Well must be reconstructed, reinstalled, repaired or replaced in order to become complaint with rules and regulations promulgated by the Texas Commission on Environmental Quality ("**TCEQ**") regarding water wells, the Well Property Owner shall be responsible for taking all actions necessary to make the Well complaint with TCEQ rules and regulations. The Non-Well Property Owner's shall be responsible to pay to Well Property Owner its Proportionate Share of the Well Expenses related to the actions taken to make the Well complaint with TCEQ rules and regulations under the same provisions of cost sharing provided in Section 2.(b) and 2.(c) above.

5. **Easements Running with the Land**. The easements, rights and obligations granted herein shall be deemed to run with the Parcels and shall burden and benefit each Owner of the Parcels, or a portion thereof, and their successors and assigns, and each of their respective Permittees and licensees. The Water Rights are for the use and benefit of each of the Parcels. Notwithstanding the foregoing, each owner of a Parcel, or portion thereof shall be responsible only for the obligations, indemnities, duties, liabilities and responsibilities set forth in this Declaration that accrue during the period of time during which such party holds fee simple title to a tract or portion thereof. Upon conveyance of a Parcel or a portion thereof, the party making such conveyance shall be relieved from the obligations, duties, indemnities and responsibilities hereunder arising from and after the date of such conveyance as to such tract, or portion thereof conveyed, and the successor owner shall become obligated hereunder for all matters arising from and after the date of conveyance.

6. **Cooperation**. The Parties each agree to make commercially reasonable efforts to cooperate with one another, at the cost and expense of the Party requesting such cooperation, with respect to Well water supply under this Agreement, including (i) the scheduling and logistics of Well and electrical maintenance, repair and replacement, (ii) the execution and filing of applications, petitions, and the like with local, county, state and federal governmental authorities, boards or agencies pertaining to matters related to the maintenance, repair, modification,

replacement, and use of the Well, and (iii) to appear at hearings and meetings with respect thereto.

7. **Closure, Abandonment and Easement Termination**. In the event the Well is no longer used by all Owners for the Water Rights granted herein, then the Parties will cause the Well to be closed and abandoned in accordance with TCEQ requirements, under the same provisions of responsibility and cost sharing as provided in Section 2.(b) and 2.(c) above. Upon such closure and abandonment, the Parties shall promptly execute and record a termination and release of the easements and Water Rights granted herein.

8. **Maintenance of Parcel**. Except as otherwise provided in this Declaration, each Owner shall be responsible, at its sole cost and expense, for maintaining and repairing its respective Parcel, in good order, condition and repair. Additionally, each Owner shall be responsible for its own garbage and/or recycling accommodations to keep its Parcel in a clean, safe, and orderly condition.

9. **All Legal and Equitable Remedies Available**. In the event of a breach or threatened breach by any Owner or its Permittees of any of the terms, covenants, restrictions or conditions hereof, the other Owners, individually or collectively, shall be entitled to all legal and equitable remedies. Without limitation of the foregoing, any Owner shall be entitled forthwith to full and adequate relief by injunction and/or all such other available legal and equitable remedies from the consequences of such breach, including full damages (actual and consequential), payment of any amounts due and/or specific performance. This Declaration may also be enforced against any person violating or attempting or threatening to violate any provision of the same which enforcement shall occur by self-help or by legal proceedings for damages, to restrain or enjoin any such violation or to compel specific performance of any obligation hereunder.

10. **Taxes and Assessments**. Each Owner shall be solely responsible for the payment of all taxes and assessments levied against its respective Parcel.

11. **Not a Public Dedication**. Nothing contained herein shall be deemed to be a gift or dedication of any portion of the Parcels to or for the general public or for any public purposes whatsoever, it being the intention Declarant that this Declaration shall be strictly limited to and for the purposes expressed herein.

12. **No Interference**. All easements granted herein shall be used in such a manner so as not to unreasonably interfere with business operations on a respective Parcel; provided, however, that any interference with the Well is hereby deemed unreasonable and is prohibited, except as otherwise set forth herein.

13. **Easements Non-Exclusive**. The easements granted herein are not exclusive and each Owner shall have the right to enjoy the portion of the easements herein granted and to grant such other easements, rights or privileges to such persons and or entities and for such purposes as the Owner of each Parcel in its discretion may select, so long as such purposes do not unreasonably interfere with the easements described herein.

14. **Entire Agreement**. This Declaration constitutes the entire agreement and declaration of Declarant relating to the subject matter hereof and may not be amended, waived or discharged, except by instrument in writing executed by the then-Owners of all of the Parcels.

15. **Insurance and Indemnification**. Each Owner shall maintain or cause to be maintained in full force and effect commercial general liability insurance with respect to such activities with a combined single limit of liability of not less than One Million Dollars ($1,000,000.00) for bodily injury to or personal injury or death of any person and consequential damages arising therefrom, and for property damage arising out of any one occurrence, and with minimum excess or umbrella policy limits in commercially reasonable amounts per occurrence insuring against personal injury, bodily injury and property damage, and the other party shall be an additional insured under such policy. Such insurance shall be procured from a company licensed in the State of Texas. Such insurance shall provide that it shall not be cancelable without thirty (30) days prior, written notice to additional insureds. Upon request, each party shall provide a certificate of such insurance coverage to the other. Each Owner shall indemnify and hold the other Owner(s) harmless from and against any and all loss, cost, damage, liability or expense (including reasonable attorneys' fees actually incurred and court costs) incurred by an Owner in connection with the exercise by such Owner' use of the easement rights created herein, except to the extent caused by the negligence or willful act of such Owner or its Permittees.

16. **Extent of Liability**. Notwithstanding any other provision contained in this Declaration to the contrary, each Owner hereby expressly agrees that the obligations and liability of each of them shall be limited solely to such party's interest in its respective Parcel, as such interest is constituted from time to time. Each Owner agrees that any claim against a party hereto shall be confined to and satisfied only out of, and only to the extent of, such party's interest in its Parcel, as such interest is constituted from time to time. Nothing contained in this paragraph shall limit or affect any right that any party might otherwise have to seek or to obtain injunctive relief or to specifically enforce the rights and agreements herein set forth, provided that such injunctive relief or specific performance does not involve the payment of money from a source other than such party's interest in its Parcel, as such interest may be constituted from time to time.

17. **Ownership.**

(a) Warranty of Title. Declarant covenants and warrants that it is the owner in fee simple of the Property and that it has a good and lawful right to convey these easements. Each Declarant and its successors and assigns hereby warrants and shall defend the right and title to the above-described easements unto the other party hereto, its successors and assigns against the lawful claims of all persons claiming by, through or under such Declarant and its successors and assigns.

(b) Subordination of Liens. Each Owner agrees that all mortgages, deeds of trust, deeds to secure debt placed upon each Owner's respective Parcel shall be subordinate and inferior to the easements created by this Declaration, and to the extent that any such mortgages, deeds of trust, deeds to secure debt presently exist, each party shall have all necessary parties execute a mutually agreeable subordination agreement which shall be recorded in conjunction herewith.

18. **Duration**. The provisions of this Declaration shall run with and bind the land described herein and, except as otherwise provided herein, shall be and remain in effect perpetually to the extent permitted by law.

19. **Time of the Essence.** Time is of the essence of this Declaration and every term and condition hereof, provided, however, that if the date for the performance of any action or obligation required hereunder occurs on a Saturday, Sunday, or legally recognized federal holiday, the date of performance of such action or obligation shall be the next business day.

20. **Waiver.** Each and every covenant and agreement contained herein shall be for any and all purposes hereof construed as separate and independent and the breach of any covenant by any party shall not release or discharge them from their obligations hereunder. No delay or omission by any party to exercise its rights accruing upon any noncompliance or failure of performance by any party shall impair any such right or be construed to be a waiver thereof. A waiver by any party hereto of any of the covenants, conditions or agreements to be performed by any other party shall not be construed to be a waiver of any succeeding breach or of any covenants, conditions or agreements contained herein.

21. **Severability.** All rights, powers and remedies provided herein may be exercised only to the extent that the exercise thereof does not violate any then applicable law and shall be limited to the extent necessary to render the real covenants herein valid and enforceable. If any term, provision, covenant or agreement contained herein or the application thereof to any person, entity or circumstance shall be held to be invalid, illegal or unenforceable, the validity of the remaining terms, provisions, covenants or agreements or the application of such term provision, covenant or agreement to person, entities or circumstances other than those to which it is held invalid or unenforceable shall not be affected thereby.

22. **Notices.** All notices required under this Declaration shall be deemed to be properly served if reduced to writing and sent by (i) certified or registered mail; (ii) Federal Express or similar overnight courier; (iii) facsimile transmission; or (iv) personal delivery and the date of such notice will be deemed to have been the date on which such notice is received as shown by the certified mail return receipt or a commercial delivery service record or in the case of facsimile on the date of receipt of the transmission as shown on a successful transmission confirmation receipt. All notices shall be addressed as follows, unless otherwise specified in writing:

Declarant: Tillar Harmon Road Partners, LP
2627 Tillar Street, Suite 111
Fort Worth, TX 76107
Attn: Emily L. Crockett

23. **Miscellaneous**. This Declaration shall be governed in accordance with the laws of the State of Texas. The paragraph headings in this Declaration are for convenience only, shall in no way define or limit the scope or content of this Declaration, and shall not be considered in any construction or interpretation of this Declaration or any part hereof. No party shall be obligated to take any action to enforce the terms of this Declaration or to exercise any easement, right, power, privilege or remedy granted, created, conferred or established hereunder.

24. **Attorney's Fees**. In the event any Owner shall institute any action or proceeding against another Owner relating to the provisions of this Declaration or any default hereunder, or to collect any amounts owing hereunder, or an arbitration, mediation or other proceeding is commenced by agreement of one or more Owners to any dispute, the non-prevailing party shall

reimburse the prevailing party for the reasonable expenses of attorneys' fees, expert witness fees and disbursements, including those related to appeals, incurred by the prevailing party.

REMAINDER OF PAGE INTENTIONALLY LEFT BLANK

IN WITNESS WHEREOF, Declarant hereby executes this Declaration effective as of the Effective Date.

DECLARANT:

TILLAR HARMON ROAD PARTNERS, LP,
a Texas limited partnership

By: TILLAR GP I, LLC,
its General Partner

By: _____
W.A. Landreth III, Managing Member

STATE OF TEXAS §

COUNTY OF TARRANT §

This instrument was acknowledged before me on the 15 day of July, 2025 by W.A. Landreth III, Managing Member of Tillar GP I, LLC, General Partner of Tillar Harmon Road Partners, LP, a Texas limited partnership, on behalf of such limited partnership.

_____
Notary Public, State of Texas

BETHANY SUMPTER
Notary ID #133530240
My Commission Expires
January 12, 2026

LIEN HOLDER'S CONSENT AND SUBORDINATION

The undersigned, Ciera Bank, Texas state banking corporation ("**Lien Holder**"), is the owner and holder of an existing deed of trust and/or vendor's lien upon and against the Property described herein above, such vendor's lien being recorded under Instrument Number D224196115, Official Public Records of Tarrant County, Texas ("**Vendor's Lien**") and such deed of trust being recorded under Document Number D224196116, Official Public Records of Tarrant County, Texas ("**Deed of Trust**"). The Lien Holder joins in the execution of this Declaration in order to evidence its consent to subordinate its Vendor's Lien and/or Deed of Trust to this Declaration.

This consent shall not be construed or operate as a release of said deed of trust or liens owned and held by the undersigned, or any part thereof, as to the property described in the Vendor's Lien.

Executed this 15th day of July, 2025.

LIEN HOLDER:

CIERA BANK,
a Texas state banking corporation

By: Justin Cowart
Name: Justin Cowart
Title: Regional President

THE STATE OF TEXAS §
§
COUNTY OF Tarrant §

This instrument was acknowledged before me on the 15th day of July, 2025, by Justin Cowart, as Regional President of Ciera Bank, a Texas state banking corporation, on behalf of said banking corporation.

Julie Marie Hendon
NOTARY PUBLIC IN AND FOR THE
STATE OF TEXAS

My Commission Expires:
2-17-2026

Julie Marie Hendon
Printed/Typed Name

Julie Marie Hendon
My Commission Expires
2/17/2026
Notary ID
133595199

EXHIBIT A
Property

5.00 acres situated in the J.M. GOODWIN SURVEY, Abst. No. 611, Tarrant County, Texas, being the tract described in deed to Danny Lee Ratliff by deed recorded in Document Number D214153642, County Clerk's Records, Tarrant County, Texas, and being more particularly described, as follows:

Beginning at a point in HARMON ROAD (a Variable Width Right-of-Way), the southeast corner of said Ratliff tract, said point being S 89°40'00" E, 60.54 feet from the northeast corner of Lot 1, Block 1, LACY ADDITION, an Addition to Tarrant County, Texas according to the Plat thereof recorded in Plat Cabinet B. Slide 978, Plat Records, Tarrant County, Texas;

THENCE N 89°40'00" W, at 60.54 feet passing a 5/8" iron rod found, the northeast corner of said Lot 1, continuing along the common line of said Ratliff tract and Lot 1, in all, a distance of 1088.07 feet to a capped 5/8" iron rod in concrete found, the northwest corner of said Lot 1, in the east line of the tract described in deed to Cowboy Church of Tarrant County by deed recorded in Document Number D217085850, County Clerk's Records, Tarrant County, Texas;

THENCE N 00°14'41" E, along the common line of said Ratliff and Cowboy Church of Tarrant County tracts, 200.28 feet to a 5/8" iron rod found for the southwest corner of the tract described in deed to Stepp/WCJ Investments, LLC by deed recorded in Document Number D209171243, County Clerk's Records, Tarrant County, Texas;

THENCE S 89°40'00" E, along the common line of said Ratliff and Stepp/WCJ Investments, LLC tracts, 1086.85 feet to the northeast corner of said Ratliff tract, from which a capped 1/2" iron rod found for the southeast corner of Lot 3, Block 4, LACY ACRES, an Addition to Tarrant County, Texas according to the Plat thereof recorded in Plat Cabinet A, Slide 4256, Plat Records, Tarrant County, Texas, bears N 08°37'17" W. 203.91 feet;

THENCE S 00°06'15" E, along the east line of said Ratliff tract, 200.29 feet to the POINT OF BEGINNING and containing 5.00 acres of land.

EXHIBIT B
Parcel 1

BEING 1.229 acres (53,544 square feet) of land in the J. M. Goodwin Survey, Abstract Number 611, Tarrant County, Texas; said 1.229 acres (53,544 square feet) of land being a portion of that certain tract of land described in a Special Warranty Deed with Vendor's Lien to Tillar Harmon Road Partners, LP (hereinafter referred to as Tillar Harmon Road Partners tract), as recorded in Instrument Number D224196115, Official Public Records, Tarrant County, Texas (O.P.R.T.C.T.); said 1.229 acres (53,544 square feet) of land being more particularly described, by metes and bounds, as follows:

COMMENCING at a five-eighths inch iron rod found for the Northwest corner of said Tillar Harmon Road Partners tract, same being the Southwest corner of that certain tract of land described in a Special Warranty Deed with Vendor's Lien to Stepp/WCJ Investments, LLC (hereinafter referred to as Stepp/WCJ Investments tract), as recorded in Instrument Number D209171243, O.P.R.T.C.T., same also being the East line of that certain tract of land described as Warranty Deed with Vendor's Lien to Cowboy Church of Tarrant County (hereinafter referred to as Cowboy Church tract), as recorded in Instrument Number D217085850, O.P.R.T.C.T.;
THENCE South 89 degrees 56 minutes 52 seconds East, departing the East line of said Cowboy Church tract, with the common line between said Tillar Harmon Road Partners tract and said Stepp/WCJ Investments tract, a distance of 854.38 feet to a five-eighths inch iron rod with plastic cap stamped "BANNISTER ENGINEERING FIRM-10193823" set for the PLACE OF BEGINNING;

THENCE South 89 degrees 56 minutes 52 seconds East, continue with the common line between said Tillar Harmon Road Partners tract and said Stepp/WCJ Investments tract, a distance of 202.47 feet to a five-eighths inch iron rod with plastic cap stamped "BANNISTER ENGINEERING FIRM-10193823" set for corner;

THENCE South 00 degrees 23 minutes 06 seconds East, departing the South line of said Stepp/WCJ Investments tract, a distance of 200.29 feet to a five-eighths inch iron rod with plastic cap stamped "BANNISTER ENGINEERING FIRM-10193823" set for corner in the South line of said Tillar Harmon Road Partners tract, same being the existing Westerly right-of-way line of said Harmon Road, as recorded in Cabinet B, Page 978, Plat Records, Tarrant Countty, Texas;

THENCE North 89 degrees 56 minutes 52 seconds West with the common line between said Tillar Harmon Road Partners tract and the existing West right-of-way line of said Harmon Road, pass at a distance of 30.00 feet, the Northeast corner of that certain tract of land described as Lot 1, Block 1, Lacy Addition (hereinafter referred to as Lot 1), an addition to Tarrant County, Texas, according to the plat recorded in Cabinet B, Page 978, Plat Records, Tarrant County, Texas, continue with said course, with the common line between said Tillar Harmon Road Partners tract and said Lot 1 for a total distance of 284.20 feet to a five-eighths inch iron rod with plastic cap stamped "BANNISTER ENGINEERING FIRM-10193823" set for corner;

THENCE North 00 degrees 23 minutes 59 seconds West, departing the North line of said Lot 1, a distance of 158.74 feet to a five-eighths inch iron rod with plastic cap stamped "BANNISTER

ENGINEERING FIRM-10193823" set for corner;

THENCE North 89 degrees 50 minutes 15 seconds East, a distance of 81.61 feet to a five-eighths inch iron rod with plastic cap stamped "BANNISTER ENGINEERING FIRM-10193823" set for corner;

THENCE North 00 degrees 09 minutes 45 seconds West, a distance of 41.24 feet to the PLACE OF BEGINNING, and containing a calculated area of 1.229 acres (53,544 square feet) of land.

EXHIBIT C
Parcel 2

BEING 1.269 acres (55,268 square feet) of land in the J. M. Goodwin Survey, Abstract Number 611, Tarrant County, Texas; said 1.269 acres (55,268 square feet) of land being a portion of that certain tract of land described in a Special Warranty Deed with Vendor's Lien to Tillar Harmon Road Partners, LP (hereinafter referred to as Tillar Harmon Road Partners tract), as recorded in Instrument Number D224196115, Official Public Records, Tarrant County, Texas (O.P.R.T.C.T.); said 1.269 acres (55,268 square feet) of land being more particularly described, by metes and bounds, as follows:

COMMENCING at a five-eighths inch iron rod found for the Northwest corner of said Tillar Harmon Road Partners tract, same being the Southwest corner of that certain tract of land described in a Special Warranty Deed with Vendor's Lien to Stepp/WCJ Investments, LLC (hereinafter referred to as Stepp/WCJ Investments tract), as recorded in Instrument Number D209171243, O.P.R.T.C.T., same also being the East line of that certain tract of land described as Warranty Deed with Vendor's Lien to Cowboy Church of Tarrant County (hereinafter referred to as Cowboy Church tract), as recorded in Instrument Number D217085850, O.P.R.T.C.T.;

THENCE South 89 degrees 56 minutes 52 seconds East, departing the East line of said Cowboy Church tract, with the common line between said Tillar Harmon Road Partners tract and said Stepp/WCJ Investments tract, a distance of 484.17 feet to a five-eighths inch iron rod with plastic cap stamped "BANNISTER ENGINEERING FIRM-10193823" set for the PLACE OF BEGINNING;

THENCE South 89 degrees 56 minutes 52 seconds East, continue with the common line between said Tillar Harmon Road Partners tract and said Stepp/WCJ Investments tract, a distance of 370.21 feet to a five-eighths inch iron rod with plastic cap stamped "BANNISTER ENGINEERING FIRM-10193823" set for corner;

THENCE South 00 degrees 09 minutes 45 seconds East, departing the South line of said Stepp/WCJ Investments tract, a distance of 41.24 feet to a five-eighths inch iron rod with plastic cap stamped "BANNISTER ENGINEERING FIRM-10193823" set for corner;

THENCE South 89 degrees 50 minutes 15 seconds West, a distance of 81.61 feet to a five-eighths inch iron rod with plastic cap stamped "BANNISTER ENGINEERING FIRM-10193823" set for corner;

THENCE South 00 degrees 23 minutes 59 seconds East, a distance of 158.74 feet to a five-eighths inch iron rod with plastic cap stamped "BANNISTER ENGINEERING FIRM-10193823" set for corner in the South line of said Tillar Harmon Road Partners tract, same being the North line of that certain tract of land described as Lot 1, Block 1, Lacy Addition (hereinafter referred to as Lot 1), an addition to Tarrant County, Texas, according to the plat recorded in Cabinet B, Slide 978, Plat Records, Tarrant County, Texas;

THENCE North 89 degrees 56 minutes 52 seconds West with the common line between said Tillar Harmon Road Partners tract and said Lot 1, a distance of 195.27 feet to a five-eighths inch iron rod with plastic cap stamped "BANNISTER ENGINEERING FIRM-10193823" set for corner;
THENCE North 00 degrees 03 minutes 08 seconds East, departing the North line of said Lot 1, a distance of 51.84 feet to a five-eighths inch iron rod with plastic cap stamped "BANNISTER ENGINEERING FIRM-10193823" set for corner;

THENCE South 89 degrees 36 minutes 01 second West, a distance of 30.48 feet to a five-eighths inch iron rod with plastic cap stamped "BANNISTER ENGINEERING FIRM-10193823" set for corner;

THENCE North 60 degrees 55 minutes 27 seconds West, a distance of 73.50 feet to a five-eighths inch iron rod with plastic cap stamped "BANNISTER ENGINEERING FIRM-10193823" set for corner;

THENCE North 00 degrees 03 minutes 08 seconds East, a distance of 113.02 feet to the PLACE OF BEGINNING, and containing a calculated area of 1.269 acres (55,268 square feet) of land.

EXHIBIT D
Parcel 3

BEING 2.364 acres (102,976 square feet) of land in the J. M. Goodwin Survey, Abstract Number 611, Tarrant County, Texas; said 2.364 acres (102,976 square feet) of land being a portion of that certain tract of land described in a Special Warranty Deed with Vendor's Lien to Tillar Harmon Road Partners, LP (hereinafter referred to as Tillar Harmon Road Partners tract), as recorded in Instrument Number D224196115, Official Public Records, Tarrant County, Texas (O.P.R.T.C.T.); said 2.364 acres (102,976 square feet) of land being more particularly described, by metes and bounds, as follows:

BEGINNING at a five-eighths inch iron rod found for the Northwest corner of said Tillar Harmon Road Partners tract, same being the Southwest corner of that certain tract of land described in a Special Warranty Deed with Vendor's Lien to Stepp/WCJ Investments, LLC (hereinafter referred to as Stepp/WCJ Investments tract), as recorded in Instrument Number D209171243, O.P.R.T.C.T., same also being the East line of that certain tract of land described as Warranty Deed with Vendor's Lien to Cowboy Church of Tarrant County (hereinafter referred to as Cowboy Church tract), as recorded in Instrument Number D217085850, O.P.R.T.C.T.;

THENCE South 89 degrees 56 minutes 52 seconds East, departing the East line of said Cowboy Church tract, with the common line between said Tillar Harmon Road Partners tract and said Stepp/WCJ Investments tract, a distance of 484.17 feet to a five-eighths inch iron rod with plastic cap stamped "BANNISTER ENGINEERING FIRM-10193823" set for corner;

THENCE South 00 degrees 03 minutes 08 seconds West, departing the South line of said Stepp/WCJ Investments tract, a distance of 113.02 feet to a five-eighths inch iron rod with plastic cap stamped "BANNISTER ENGINEERING FIRM-10193823" set for corner;

THENCE South 60 degrees 55 minutes 27 seconds East, a distance of 73.50 feet to a five-eighths inch iron rod with plastic cap stamped "BANNISTER ENGINEERING FIRM-10193823" set for corner;

THENCE North 89 degrees 36 minutes 01 second East, a distance of 30.48 feet to a five-eighths inch iron rod with plastic cap stamped "BANNISTER ENGINEERING FIRM-10193823" set for corner;

THENCE South 00 degrees 03 minutes 08 seconds West, a distance of 51.84 feet to a five-eighths inch iron rod with plastic cap stamped "BANNISTER ENGINEERING FIRM-10193823" set for corner in the South line of said Tillar Harmon Road Partners tract, same being the North line of that certain tract of land described as Lot 1, Block 1, Lacy Addition (hereinafter referred to as Lot 1), an addition to Tarrant County, Texas, according to the plat recorded in Cabinet B, Slide 978, Plat Records, Tarrant County, Texas;

THENCE North 89 degrees 56 minutes 52 seconds West with the common line between said Tillar Harmon Road Partners tract with said Lot 1, a distance of 578.60 feet to a five-eighths inch iron

rod with plastic cap found for the Southwest corner of said Tillar Harmon Road Partners tract, same being the Northwest corner of said Lot 1, same also being the East line of said Cowboy Church tract;

THENCE North 00 degrees 02 minutes 11 seconds West with the common line between said Tillar Harmon Road Partners tract and said Cowboy Church tract, a distance of 200.28 feet to the PLACE OF BEGINNING, and containing a calculated area of 2.364 acres (102,976 square feet) of land.

TARRANT COUNTY TRANSPORTATION SERVICES

200 Taylor Street, Ste. 305 | Fort Worth, TX 76196 | 817-884-1250 | www.tarrantcountytx.gov

REQUEST FOR VARIANCE APPROVAL

PROPERTY INFORMATION

Case #: TCP-25-003

Property Address: 13181 Harmon Road Precinct: 4

Subdivision Name: Harmon Road Addition Total Acres (net): 5.0

Proposed Use of the Property: Commercial Total # of Lots Established: 3

APPLICANT INFORMATION

Property Owner/Agent (Name and Company, if applicable): Tillar Harmon Road Partners / W.A. Landreth

Phone Number: 817-992-7375 Email: khurych@vaqueroventures.com

APPLICANT REQUESTS:

The attached letter from Applicant requests approval of variance from the *Tarrant County Development Regulations* requiring:

- ☒ Final Plats comprised of subdivided lots using on-site water wells, include a certification of groundwater availability prepared by a licensed Engineer or geoscientist. [TC-DRM § 2.02(C3)]
- ☐ All roadways must conform to specifications included within the Engineering Standards Manual. [TC-DRM § 4.05(A), TC-ESM § 3.04 & 3.05]

DEPARTMENT RECOMMENDATION:

The attached final plat has been reviewed by the Tarrant County Transportation Services Department (Department) and has successfully met the standards contained in the *Tarrant County Development Regulations Manual*, with the exception of the variance request(s) listed above. With approval of the variance request(s), the Tarrant County Transportation Services Department recommends the approval of the final plat.

Joseph Jackson, P.E., CFM Digitally signed by Joseph Jackson, P.E., CFM Date: 2025.11.24 15:39:16 -06'00' 11/24/2025

Tarrant County Transportation Services Date

COMMISSIONER ACKNOWLEDGEMENT

I have reviewed the attached final plat and variance request as described above. I have no objection to the Commissioners Court's or the Department's approval of the final plat and variance request.

Tarrant County Commissioner, Precinct 4 12/1/25

Date

Following approval of the plat application and variance request, the plat shall be filed in accordance with Section 3.03 of the County's Development Regulations Manual.

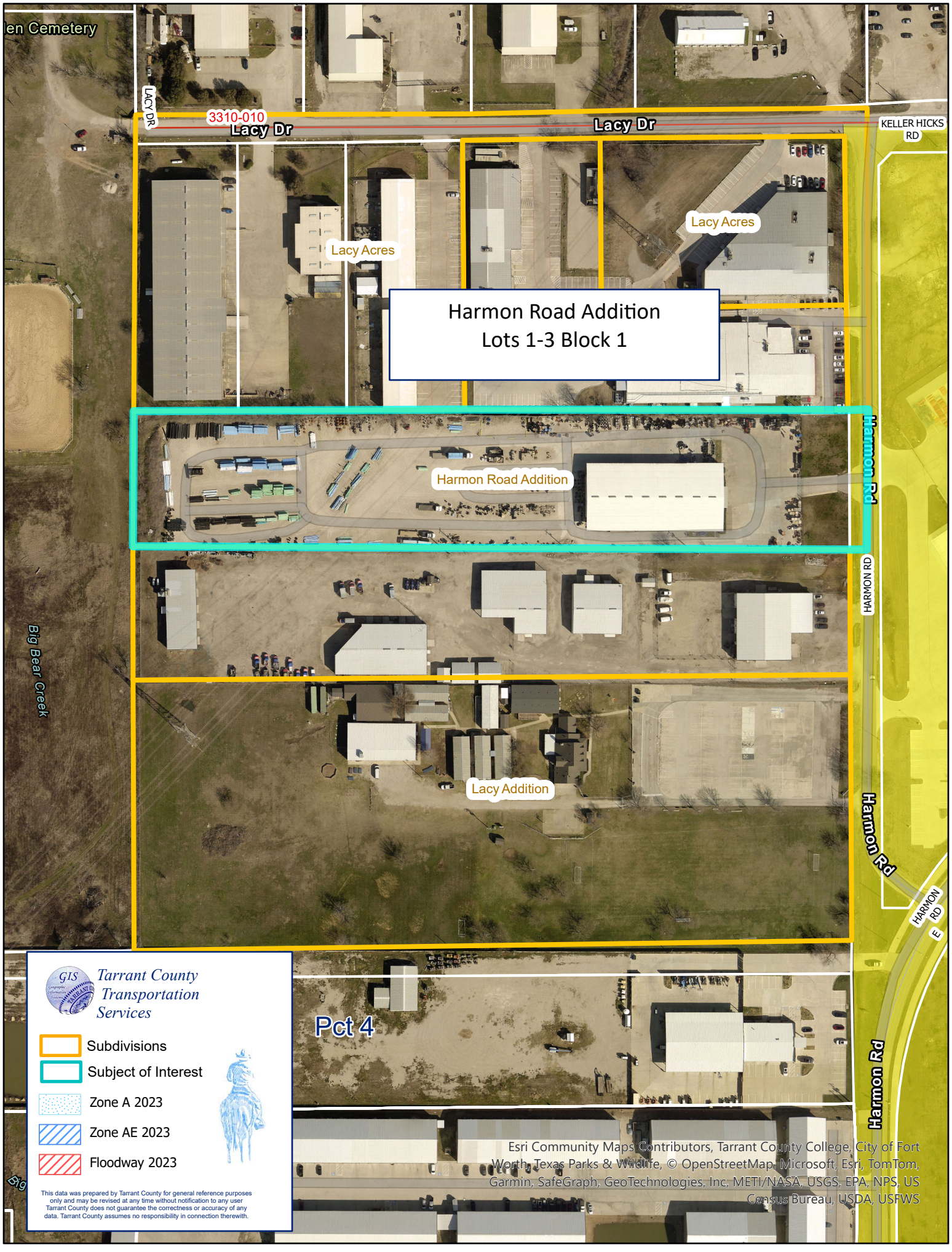
Harmon Road Addition
Lots 1-3 Block 1
3310-010
Lacy Dr
Lacy Dr
LACY DR
KELLER HICKS RD
Lacy Acres
Lacy Acres
Harmon Road Addition
HARMON RD
HARMON RD
Lacy Addition
Harmon Rd
HARMON RD E
Harmon Rd
Pct 4
Big Bear Creek
Tarrant County Transportation Services
Subdivisions
Subject of Interest
Zone A 2023
Zone AE 2023
Floodway 2023
This data was prepared by Tarrant County for general reference purposes only and may be revised at any time without notification to any user Tarrant County does not guarantee the correctness or accuracy of any data. Tarrant County assumes no responsibility in connection therewith.
Esri Community Maps Contributors, Tarrant County College, City of Fort Worth, Texas Parks & Wildlife, © OpenStreetMap, Microsoft, Esri, TomTom, Garmin, SafeGraph, GeoTechnologies, Inc, METI/NASA, USGS, EPA, NPS, US Census Bureau, USDA, USFWS

LAND USE TABLE	
Total Gross Acreage	5.000 Acres
Right-of-way Dedication	0.138 Acre
Net Acreage	4.862 Acres
Number of Residential Lots	0
Number of Non-Residential Lots	3
Non-Residential Acreage	5.000 Acres
Private Park Acreage	0
Public Park Acreage	0

N

GRAPHIC SCALE

40 0 20 40 80

(IN FEET)
1 inch = 40 ft.

PLACE OF BEGINNING
FOUND 5/8" IRON ROD
C.M.
NAD-1983 COORDINATE SYSTEM (2011)
TEXAS NORTH CENTRAL ZONE
GRID COORDINATES
N: 7027056.10
E: 2328551.03

FOUND 5/8" CAPPED IRON ROD (ILLEGIBLE)
C.M.
NAD-1983 COORDINATE SYSTEM (2011)
TEXAS NORTH CENTRAL ZONE
GRID COORDINATES
N: 7026855.82
E: 2328551.16

LOT 2R-1, BLOCK 4
LACY ADDITION
INSTRUMENT NUMBER D222055427, O.P.R.T.C.T.

STEPP/WCJ INVESTMENTS, LLC
INSTRUMENT NUMBER D209171243
O.P.R.T.C.T.

COWBOY CHURCH OF TARRANT COUNTY
INSTRUMENT NUMBER D217085850
O.P.R.T.C.T.

LOT 3, BLOCK 1
2.364 ACRES OR
102,976 SQUARE FEET

LOT 2, BLOCK 1
1.269 ACRES OR
55,268 SQUARE FEET

LOT 1, BLOCK 1
1.229 ACRES OR
53,544 SQUARE FEET

TOTAL AREA: 5.000 ACRES
OR 217,796 SQUARE FEET

TILLAR HARMON ROAD PARTNERS, LP
INSTRUMENT NUMBER D224196115
O.P.R.T.C.T.

LOT 1, BLOCK 1
LACY ADDITION
CABINET B, SLIDE 978
P.R.T.C.T.

LOT 1, BLOCK 2
SYNERGY WEST
INSTRUMENT NUMBER D222272199
O.P.R.T.C.T.

30' PUBLIC RIGHT-OF-WAY
INSTRUMENT NUMBER
D222055427
O.P.R.T.C.T.

CITY OF FORT WORTH
PER ORDINANCE NO. 10236

J. M. GOODWIN SURVEY, ABSTRACT NUMBER 611

W. MCOWENS SURVEY, ABSTRACT NUMBER 999

10' TRI-COUNTY ELECTRIC COOPERATIVE, INC. EASEMENT
INSTRUMENT NUMBER D213256018
O.P.R.T.C.T.

30' MUTUAL ACCESS EASEMENT
INSTRUMENT NUMBER
D225175609
O.P.R.T.C.T.

PUBLIC RIGHT-OF-WAY DEDICATION
(6,008 SQUARE FEET OR 0.138 ACRE
DEDICATED BY THIS PLAT)

20' PUBLIC RIGHT-OF-WAY
INSTRUMENT NUMBER D222272199
O.P.R.T.C.T.

60' RIGHT-OF-WAY
CABINET B,
PAGE 978
P.R.T.C.T.

HARMON ROAD
ALSO KNOWN AS COUNTY ROAD 4105
VARIABLE WIDTH PUBLIC RIGHT-OF-WAY

30' BUILDING LINE
(DEDICATED BY THIS PLAT)

150' ELECTRIC SERVICE COMPANY EASEMENT
VOLUME 5647, PAGE 4, D.R.T.C.T.

PRIVATE WATER WELL

SET MAG NAIL
EXISTING CENTERLINE

SURVEY LINE

CITY OF FORT WORTH
PER ORDINANCE NO. 10236

SET MAG NAIL
NAD-1983 COORDINATE SYSTEM (2011)
TEXAS NORTH CENTRAL ZONE
GRID COORDINATES
N: 7026854.82
E: 2329639.23

EXISTING CENTERLINE

SURVEY LINE

PLACE OF BEGINNING
FOUND 5/8" IRON ROD
C.M.

FOUND 1/2" CAPPED IRON ROD (ILLEGIBLE)
C.M.

N00° 02' 11"W 200.28'

232.10' 484.17' 206.88' S89° 56' 52"E 1086.85' 370.21' 202.47' 8.8' 22.0' 13.2' 30.00' 18.25' 19.44'

43.3' 50.2' N00° 03' 08"E 113.02'

N00° 09' 45"W 41.24'
N89° 50' 15"E 81.61'

S31° 20' 56"E 35.48'
N31° 20' 56"W 58.25'

S00° 23' 07"E 200.29'

N00° 23' 59"W 158.74'

N00° 23' 06"W 200.29'

S00° 23' 06"E 200.32'

S89° 56' 52"E 30.00'
N00° 03' 08"E 21.93'
S00° 03' 08"W 23.75'
N60° 55' 27"W 73.50'
13.17'
L=35.55'
R=23.00'
L=35.61'
R=23.00'
L=9.43'
R=212.00'
S80° 40' 04"E 72.43'
L=29.48'
R=182.00'
S89° 36' 01"W 30.48'
N89° 36' 01"E 9.02'
N00° 03' 08"E 30.00'
N00° 03' 08"E 51.84'
53.58'
L=30.91'
R=182.00'
S89° 36' 01"W 66.75'
N80° 40' 04"W 75.09'
L=34.34'
R=212.00'
30.00'
5.00'
S89° 56' 52"E 286.54'
S89° 56' 52"E 286.77'
284.20'
12.5'
24.5'
12.0'
41.55' 206.88' 578.60' 195.27' N89° 56' 52"W 1088.07'
43.88'

LEGEND

N	NORTH
S	SOUTH
E	EAST
W	WEST
°	DEGREES
'	MINUTES/FEET
"	SECONDS/INCHES
U.E.	UTILITY EASEMENT
D.R.T.C.T.	DEED RECORDS TARRANT COUNTY, TEXAS
O.P.R.T.C.T.	OFFICIAL PUBLIC RECORDS TARRANT COUNTY, TEXAS
P.R.T.C.T.	PLAT RECORDS TARRANT COUNTY, TEXAS
C.M.	CONTROLLING MONUMENT

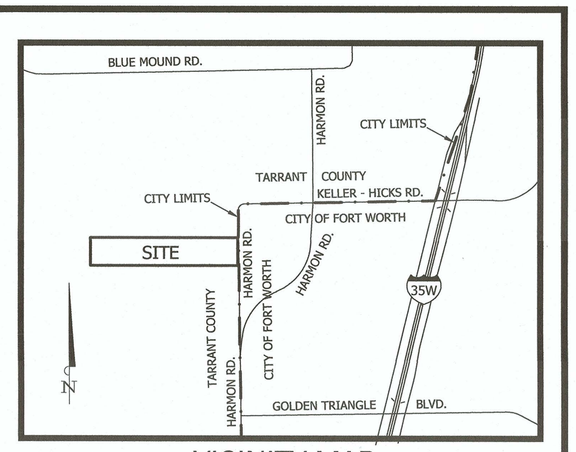

VICINITY MAP
NOT TO SCALE
TARRANT COUNTY, TEXAS

SURVEYOR'S CERTIFICATE:

THAT I, Michael B. Szurgot, a Registered Professional Land Surveyor, do hereby certify that I prepared this plat from an actual on-the-ground survey of the land as described and that the corner monuments shown thereon were properly placed under my personal supervision in accordance with the Development and Land Use Regulations of Tarrant County.

For: Bannister Engineering, LLC

STATE OF TEXAS
REGISTERED
MICHAEL B. SZURGOT
4418
PROFESSIONAL
LAND SURVEYOR

Michael B. Szurgot
Registered Professional Land Surveyor
Texas Registration No. 4418

GENERAL NOTES:

A. All bearings shown herein are Texas State Plane Coordinate System, NAD83 (CORS), Texas North Central Zone (4202). All distances shown herein are surface distances.

B. According to surveyor's interpretation of information shown on the National Flood Insurance Program (NFIP) "Flood Insurance Rate Map" (FIRM), Community Panel No. 48439C0055K, dated September 25, 2009. The property appears to lie within Zone "X" and the entire property lies within a "Areas determined to be outside the 0.2% annual chance floodplain" zone as defined by the U.S. Department of Housing and Urban Development, Federal Insurance Administration, or the Federal Emergency Management Agency.

C. The above referenced "FIRM" map is for use in administering the "NFIP"; it does not necessarily show all areas subject to flooding, particularly from local sources of small size, which could be flooded by severe, concentrated rainfall coupled with inadequate local drainage systems. There may be other streams, creeks, low areas, drainage systems or other surface or subsurface conditions existing on or near the subject property which are not studied or addressed as a part of the "NFIP".

D. All iron rods set (IRS) are 5/8-inch with a plastic cap stamped "BANNISTER ENGINEERING FIRM-10193823" for original monumentation.

E. This subdivision or any part thereof is not located within the E.T.J. of any city or town.

F. Existing water well was observed on the subject property at time of survey. Declaration of Water Well Easement Agreement, recorded in Instrument Number D225128748, Official Public Records, Tarrant County, Texas.

G. Mutual Access Easement is for the use of Lot 1, Lot 2 and Lot 3 and will be maintained by the property owners in accordance with the 30' Mutual Access Easement, as recorded in Instrument Number D225175609, Official Public Records, Tarrant County, Texas.

H. According to the historical information on file with Tarrant County records Harmon Road was accepted as a second-class road with no defined width at time of recording.

I. According to the City of Fort Worth Transportation Department the ultimate right-of-way width of Harmon Road should be 60 feet wide.

J. The right-of-way dedication is consistent with the right-of-way recommendation by the City of Fort Worth Transportation Department.

LEGAL LAND DESCRIPTION:

WHEREAS, **TILLAR HARMON ROAD PARTNERS, LP**, is the owner of that certain 5.000 acres (217,796 square feet) of land in the J. M. Goodwin Survey, Abstract Number 611, Tarrant County, Texas; said 5.000 acres (217,796 square feet) of land being a portion of that certain tract of land described in a Special Warranty Deed with Vendor's Lien to Tillar Harmon Road Partners, LP (hereinafter referred to as Tillar Harmon Road Partners tract), as recorded in Instrument Number D224196115, Official Public Records, Tarrant County, Texas (O.P.R.T.C.T.); said 5.000 acres (217,796 square feet) of land being more particularly described, by metes and bounds, as follows:

BEGINNING at a five-eighths inch iron rod found for the Northwest corner of said Tillar Harmon Road Partners tract, same being the Southwest corner of that certain tract of land described in a Special Warranty Deed with Vendor's Lien to Stepp/WCJ Investments, LLC (hereinafter referred to as Stepp/WCJ Investments tract), as recorded in Instrument Number D209171243, O.P.R.T.C.T., same also being the East line of that certain tract of land described as Warranty Deed with Vendor's Lien to Cowboy Church of Tarrant County (hereinafter referred to as Cowboy Church tract), as recorded in Instrument Number D217085850, O.P.R.T.C.T.;

THENCE South 89 degrees 56 minutes 52 seconds East, departing the East line of said Cowboy Church tract, with the common line between said Tillar Harmon Road Partners tract and said Stepp/WCJ Investments tract, a distance of 1086.85 feet to a mag nail set in asphalt pavement for the Northeast corner of said Tillar Harmon Road Partners tract, same being the Southeast corner of said Stepp/WCJ Investments tract, same also being the existing center of Harmon Road, also known as County Road 4105 (variable width right-of-way), as recorded in Instrument Number D222272199, O.P.R.T.C.T.;

THENCE South 00 degrees 23 minutes 07 seconds East with the common line between said Tillar Harmon Road Partners tract and the existing center of said Harmon Road, a distance of 200.29 feet to a mag nail set in asphalt pavement for the Southeast corner of said Tillar Harmon Road Partners tract;

THENCE North 89 degrees 56 minutes 52 seconds West, continue with the common line between said Tillar Harmon Road Partners tract and the existing center of said Harmon Road, pass at a distance of 60.00 feet, the Northeast corner of that certain tract of land described as Lot 1, Block 1, Lacy Addition (hereinafter referred to as Lot 1), an addition to Tarrant County, Texas, according to the plat recorded in Cabinet B, Slide 978, Plat Records, Tarrant County, Texas, continue with said course, with the common line between said Tillar Harmon Road Partners tract and said Lot 1 for a total distance of 1088.07 feet to a five-eighths inch iron rod with plastic cap (illegible) found for the Southwest corner of said Tillar Harmon Road Partners tract, same being the Northwest corner of said Lot 1, same also being the East line of said Cowboy Church tract;

THENCE North 00 degrees 02 minutes 11 seconds West with the common line between said Tillar Harmon Road Partners tract and said Cowboy Church tract, a distance of 200.28 feet to the **PLACE OF BEGINNING**, and containing a calculated area of 5.000 acres (217,796 square feet) of land.

STATE OF TEXAS §
COUNTY OF TARRANT §

That we, **TILLAR HARMON ROAD PARTNERS, LP**, Owners, do hereby bind themselves and their heirs, assignees, and successors of title this plat designating the hereinabove described property as "**HARMON ROAD ADDITION**", an addition to Tarrant County, and do hereby dedicate and conveys to Tarrant County in fee simple the right-of-way shown hereon for the public use forever for street and right-of-way purposes, and do hereby reserve the easement strips shown on this plat for the mutual use and accommodation of garbage collection agencies and all public utilities desiring to use or using same.

Furthermore, we certify that all parties with an interest in the title to this property have joined in this dedication.

WITNESS UNDER MY HAND THIS THE 25 DAY OF November, 2025.

TILLAR HARMON ROAD PARTNERS, LP, a Texas limited partnership
By: Tillar GP I, LLC, its General Partner

By: _____
Name: W. A. Landreth, III, Managing Member

Lender: Ciera Bank
By: _____
Name: Justin Cowart

STATE OF TEXAS §
COUNTY OF TARRANT §

BEFORE ME, the undersigned authority, on this day personally appeared, known to me to be the person whose name is W. A. Landreth, III, Managing Member of Tillar GP I, LLC, general partner of Tillar Harmon Road Partners, LP, subscribed to the foregoing instrument, and acknowledged to me that he executed the same for the purposes and considerations therein stated.

Given under my hand and seal of office this 25 day of November, 2025.

_____
NOTARY PUBLIC

BETHANY SUMPTER
Notary ID #133530240
My Commission Expires
January 12, 2026

STATE OF TEXAS §
COUNTY OF Tarrant §

BEFORE ME, the undersigned authority, on this day personally appeared, known to me to be the person whose name is Justin Cowart, Regional President of Ciera Bank, subscribed to the foregoing instrument, and acknowledged to me that he executed the same for the purposes and considerations therein stated.

Given under my hand and seal of office this 25th day of November, 2025.

_____
NOTARY PUBLIC

Julie Marie Hendon
My Commission Expires
2/17/2026
Notary ID
133595199

General Plat Notes:

1. Development in unincorporated Tarrant County shall be subject to applicable municipal regulations, the current Tarrant County Development Regulations Manual, and the Tarrant County Fire Code.
2. Tarrant County permits required prior to development within this subdivision, as applicable, include, but are not limited to, construction within the public rights-of-way, driveway access to public roads, development within a designated floodplain, salvage yards, stormwater mitigation, and on-site sewage systems.
3. All drainage easements shall be kept clear of fences, buildings, foundations, plantings, and other obstructions to the operation and maintenance of the drainage facility. All drainage easements that are adjacent and parallel to the right-of-way of dedicated public roadways will be maintained by Tarrant County as approved by Tarrant County Transportation Services.
4. The siting and construction of water wells shall be subject to the regulations of the Northern Trinity Groundwater Conservation District.
5. Tarrant County is not responsible for confirming or ensuring the availability of groundwater.
6. Any existing creek, stream, river, or drainage channel traversing along or across portions of this addition will remain unobstructed at all times and will be maintained by the adjacent property owner, or the Homeowners Association, if applicable. The County will not be responsible for the maintenance, erosion control, and/or operation of said drainage ways. The homeowners shall keep the adjacent drainage ways traversing their property clean and free of debris, silt or other substances which would result in unsanitary conditions, and the County shall have the right of entry for the purposes of inspecting maintenance work by the property owners. The drainage ways are occasionally subject to stormwater overflow damages resulting from the stormwater overflow and/or bank erosion that cannot be identified. The County shall not be liable for any damages resulting from the occurrence of these phenomena, nor the failure of any structures within the drainage ways. The drainage way crossing each lot is contained within the floodplain/drainage easement line, as shown on the plat.
7. Tarrant County shall not be responsible for the maintenance of private streets, drives, emergency access easements, recreation areas, and open spaces; and the owners shall be responsible for the maintenance of private streets, drives, emergency access easements, recreation areas, and open spaces, and said owners agree to indemnify and save harmless Tarrant County from all claims, damages, and losses arising out of or resulting from the performance of the obligations of said owners set for in this paragraph.
8. Tarrant County does not enforce subdivision deed restrictions.
9. Landowners and subsequent owners of lots or parcels within this subdivision are encouraged to contact Tarrant County's Transportation Services Department prior to conducting any development activities.
10. Any public utility, including the County, shall have the right to remove and keep clear all or part of any building, fences, trees, overgrown shrubs, or improvements that in any way endanger or interfere with the construction, maintenance, or efficiency of its respective systems on any of the easement or right-of-way dedicated via the plat; and any public utility, including the County, shall have the right at all times an ingress and egress to and from upon said easements for the purpose of construction, reconstruction, inspection, patrolling, maintaining and adding to or removing all or part of it its respective systems without the necessity at any time of procuring the permission of anyone. Property owners shall maintain easements dedicated via the plat. The County can remove trees or any other improvement(s) within the easements dedicated via this plat and does not have the responsibility to replace them.
11. Tarrant County requires a minimum lot size of 1.0 acre (net) for properties that are not served by a public water system, andthat will be served by private on-site sewage facilities (OSSF). For lots that are less than 1.0 acre (net), landowners shall submit a formal request for a variance of the Tarrant County Development Regulations relating to lot size and a written authorization from Tarrant County Public Health confirming that it has no objections with the processing of the plat. The approval of this plat does not guarantee that any lot is suitable for an OSSF.
12. Tarrant County does not enforce building setbacks more than the County's minimum requirements – 25 feet from ROW for County maintained roads and 50 feet from ROW for State Highways. (TLGC § 233.031-233.032).

Water: Private Individual Water Well

Electric: Oncor Electric Delivery Company, LLC
Phone: 888-313-6862

Septic : Private Individual Septic Systems

COMMISSIONERS COURT
TARRANT COUNTY, TEXAS

PLAT APPROVAL DATE: _____

BY: _____
[ ] CLERK OF COMMISSIONERS COURT
[ ] TRANSPORTATION SERVICES DEPARTMENT

NOTE:
CONSTRUCTION NOT COMPLETED WITHIN TWO YEARS OF THE RECORDING DATE SHALL BE SUBJECT TO CURRENT COUNTY SUBDIVISION STANDARDS AND REGULATIONS.

CASE NO. TCP-25-003

FINAL PLAT
OF
HARMON ROAD ADDITION
LOTS 1 THRU 3, BLOCK 1
Being 5.000 acres out of the
J. M. Goodwin Survey, Abstract Number 611
Tarrant County, Texas
Preparation Date: January 2025
Revision Date: November 24, 2025
SHEET 1 OF 1

ENGINEER / SURVEYOR:
BANNISTER ENGINEERING, LLC
240 NORTH MITCHELL ROAD
MANSFIELD, TEXAS 76063
CONTACT: MICHAEL B. SZURGOT, RPLS
PHONE: 817-842-2094
mszurgot@bannistereng.com

OWNER / DEVELOPER:
TILLAR HARMON ROAD PARTNERS, LP
2627 TILLAR STREET, SUITE 111
FORT WORTH, TEXAS 76107
PHONE: 817-992-7375
khurych@vaqueroventures.com

PREPARED BY: PROJECT NO. 222-25-002
BANNISTER ENGINEERING
240 North Mitchell Road
Mansfield, TX 76063 817.842.2094
TBPLS REGISTRATION NO. 10193823

B:\Clients\222 (Vaquero Ventures)\222-25-002 (1181 Harmon Rd - Ft Worth)\Survey\222-25-002 Survey Basis.dwg
11/25/2025 11:39:10 AM

TARRANT COUNTY TAX OFFICE

100 E. Weatherford, Room 105 • Fort Worth, Texas 76196-0301 • 817-884-1100
taxoffice@tarrantcountytx.gov
In God We Trust

RICK BARNES
Tax Assessor-Collector

TAX CERTIFICATE FOR ACCOUNT : 00006692605
AD NUMBER: A 611 1G
CERTIFICATE NO : 145241199

DATE : 11/25/2025
FEE : $10.00

COLLECTING AGENCY

RICK BARNES
PO BOX 961018
FORT WORTH TX 76161-0018

REQUESTED BY

TILLAR HARMON ROAD PARTNERS LP

2627 TILLAR ST SUITE 111
FORT WORTH TX 76107

PROPERTY DESCRIPTION

GOODWIN, J M SURVEY ABSTRACT
611 TRACT 1G

0013181 HARMON RD
5 ACRES

PROPERTY OWNER

TILLAR HARMON ROAD PARTNERS LP

2627 TILLAR ST SUITE 111
FORT WORTH TX 76107

YEAR	TAX UNIT	AMOUNT DUE
2025	Tarrant County	$0.00
2025	JPS HEALTH NETWORK	$0.00
2025	TARRANT COUNTY COLLEGE	$0.00
2025	EMERGENCY SERVICE DISTRICT #1	$0.00
	TOTAL	$0.00

ISSUED TO : TILLAR HARMON ROAD PARTNERS LP
ACCOUNT NUMBER: 00006692605
TOTAL CERTIFIED TAX: $0.00

As Deputy Tax Assessor/Collector for Tarrant County , I do hereby certify pursuant to Texas Property Tax Code Section 31.08 that the delinquent taxes, penalties and attorney fees due for only the above described property are as listed below according to the current tax records. Additional taxes may become due on the described property, which are not reflected herein, if the said described property has or is receiving any special statutory valuations that may trigger tax rollback provisions and other changes to the appraisal roll made subsequent to the issuance of this certificate.

This certificate applies to ad valorem taxes only and does not apply to any special assessment levies.

_____ Deputy

TAX ASSESSOR-COLLECTOR
TARRANT COUNTY, TEXAS

TARRANT COUNTY
COMMISSIONERS COURT COMMUNICATION

Court Date: December 9, 2025	**Court Order #:**	**Page:** 1 of 4
Department: Transportation	**Prepared By:** Sarah VanTassel	**Approved By:** Joseph Jackson

SUBJECT:

Receive and File Final Plat - J & R Addition - Precinct 2

***** CONSENT AGENDA *****

COMMISSIONERS COURT ACTION REQUESTED

It is requested that the Commissioners Court receive and file the Final Plat of J & R Addition, an addition to Tarrant County, Precinct 2.

BACKGROUND

The County is required to approve, approve with conditions, or disapprove a plat within certain deadlines as specified in Chapter 232 of the Texas Local Government Code.

On October 30, 2025, the signed plat was submitted to Tarrant County Transportation Services to place on the Commissioners Court Agenda. The statutory deadline for the plat expired on November 20, 2025. The next available court date was December 16, 2025, twenty-six (26) days beyond the statutory deadline.

The plat was reviewed by Precinct 2 Commissioner, Alisa Simmons, on November 13, 2025, who acknowledged the need to administratively approve the plat.

The administratively approved plat is attached.

A location map of this subdivision in Precinct 2 is attached.

The signed Notice of Administrative Approval of Final Plat is attached.

FISCAL IMPACT

There is no fiscal impact associated with this item.

Attachments

J&R Addition Replat.TCP-25-012.UNINC-Administratively Approved Plat-11132025.pdf

J&R Addition_Lot1R1_Block1_CourtMap.pdf

* LEGEND *

SUBJECT PROPERTY LINE	
ADJOINER PROPERTY LINE	
PREVIOUS PROPERTY LINE	
EASEMENT	
CENTERLINE	

CIRF	CAPPED IRON ROD FOUND
CIRS	CAPPED IRON ROD SET
IRF	IRON ROD FOUND
IPF	IRON PIPE FOUND
(C.M.)	CONTROLLING MONUMENT
PFC	POINT FOR CORNER
D.R.T.C.T.	DEED RECORDS, TARRANT COUNTY, TEXAS
P.R.T.C.T.	PLAT RECORDS, TARRANT COUNTY, TEXAS
INST#	INSTRUMENT NUMBER
VOL.	VOLUME
PG.	PAGE
P.O.B.	POINT OF BEGINNING
R.O.W.	RIGHT-OF-WAY
CONC.	CONCRETE
ELEC.	ELECTRIC
ESMT.	EASEMENT
CAB.	CABINET
SL.	SLIDE
U.E.	UTILITY EASEMENT
D.E.	DRAINAGE EASEMENT
P.J.R.R.	PER J&R ADDITION REPLAT, INSTRUMENT NUMBER D220267887, P.R.T.C.T.

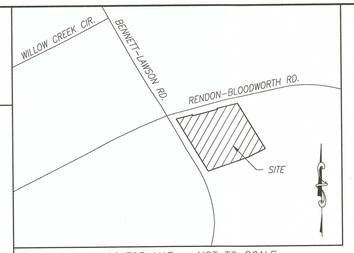

LOCATOR MAP – NOT TO SCALE

Ⓐ RIGHT-OF-WAY DEDICATION: 1,150.80 SQFT OR 0.035 ACRES – BY THIS PLAT

Ⓑ RIGHT-OF-WAY DEDICATION: 1,871.59 SQFT OR 0.043 ACRES – BY THIS PLAT



STATE OF TEXAS:

COUNTY OF TARRANT:

LEGAL DESCRIPTION

BEING A 6.50 ACRE TRACT OF LAND, AND BEING ALL OF A CALLED 1.37 ACRE TRACT OF LAND, OUT OF THE MCNARY GIBSON SURVEY, ABSTRACT NUMBER 621, TARRANT COUNTY, TEXAS, AS CONVEYED TO WALNUT RIDGE BAPTIST CHURCH, INC, AS DESCRIBED IN A DEED, RECORDED IN INSTRUMENT NUMBER D225139671, OF THE DEED RECORDS OF TARRANT COUNTY, TEXAS (D.R.T.C.T.), AND BEING ALL OF LOT 1R, BLOCK 1, OF THE J&R ADDITION, AN ADDITION TO THE CITY OF MANSFIELD, TARRANT COUNTY, TEXAS, ACCORDING TO A PLAT THEREOF, RECORDED IN INSTRUMENT NUMBER D220267887, OF THE PLAT RECORDS OF TARRANT COUNTY, TEXAS (P.R.T.C.T.), AND BEING ALL OF A 0.854 ACRE TRACT OF LAND, OUT OF THE SAID MCNARY GIBSON SURVEY, BEING A REMAINDER TRACT OF LAND, AS CONVEYED TO WALNUT RIDGE BAPTIST CHURCH, INC, IN A DEED RECORDED IN INSTRUMENT NUMBER D219157043, D.R.T.C.T., SAVE AND EXCEPT SAID LOT 1R, BLOCK 1, OF THE J & R ADDITION, ACCORDING TO SAID PLAT, AND SAVE AND EXCEPT A RIGHT-OF-WAY DEDICATION TO TARRANT COUNTY, AS DESCRIBED IN A NOTICE, RECORDED IN INSTRUMENT NUMBER D220248695, D.R.T.C.T., AND BEING MORE PARTICULARLY DESCRIBED BY METES AND BOUNDS AS FOLLOWS:

BEGINNING AT A 1/2-INCH IRON ROD FOUND, SAID POINT BEING THE MOST NORTHEASTERLY CORNER OF SAID SUBJECT TRACT, SAID POINT ALSO BEING THE MOST NORTHWESTERLY CORNER OF A CALLED 10.052 ACRE TRACT, AS CONVEYED TO NEWPORT INVESTMENTS, LLC, AS DESCRIBED IN A DEED, RECORDED IN INSTRUMENT NUMBER D224202149, D.R.T.C.T., SAID POINT ALSO BEING ON THE SOUTHERLY RIGHT-OF-WAY LINE OF RENDON-BLOODWORTH ROAD, SAID POINT ALSO BEING **THE POINT OF BEGINNING;**

THENCE FOLLOWING THE COMMON LINE OF SAID SUBJECT TRACT AND SAID 10.052 ACRE TRACT, SOUTH 31 DEGREES 04 MINUTES 13 SECONDS EAST, PASSING A 1/2-INCH IRON ROD FOUND WITH RED CAP, STAMPED "SDS GDM", AT A DISTANCE OF 169.09 FEET, PASSING A 1/2-INCH IRON ROD FOUND, SAID POINT BEING THE MOST SOUTHEASTERLY CORNER OF SAID 1.37 ACRE TRACT, SAID POINT BEING THE MOST NORTHEASTERLY CORNER OF SAID LOT 1R, AT A DISTANCE OF 273.13 FEET, AND CONTINUING A TOTAL DISTANCE OF 479.61 FEET, TO A 1/2-INCH CAPPED IRON ROD FOUND, STAMPED "WIER & ASSOC", SAID POINT BEING THE MOST SOUTHEASTERLY CORNER OF SUBJECT TRACT, SAID POINT ALSO BEING THE MOST NORTHEASTERLY CORNER OF LOT 3, OF THE J & R ADDITION, AN ADDITION TO THE CITY OF MANSFIELD, TARRANT COUNTY, TEXAS, ACCORDING TO A PLAT THEREOF, RECORDED IN CABINET A, SLIDE 2006, P.R.T.C.T.;

THENCE DEPARTING THE COMMON LINE OF SAID SUBJECT TRACT AND SAID 10.052 ACRE TRACT, AND FOLLOWING THE COMMON LINE OF SAID SUBJECT TRACT AND SAID LOT 3, THE FOLLOWING COURSES:

SOUTH 64 DEGREES 03 MINUTES 35 SECONDS WEST, A DISTANCE OF 168.70 FEET, TO A 1/2-INCH CAPPED IRON ROD FOUND, STAMPED "WIER & ASSOC";

SOUTH 70 DEGREES 40 MINUTES 39 SECONDS WEST, A DISTANCE OF 386.04 FEET, TO A 1/2-INCH CAPPED IRON ROD FOUND, STAMPED "WIER & ASSOC", SAID POINT BEING THE MOST SOUTHWESTERLY CORNER OF SAID SUBJECT TRACT, SAID POINT ALSO BEING THE MOST THE MOST NORTHWESTERLY CORNER OF SAID LOT 3, SAID POINT ALSO BEING ON THE EASTERLY RIGHT-OF-WAY LINE OF BENNETT-LAWSON ROAD;

THENCE DEPARTING THE COMMON LINE OF SAID SUBJECT TRACT AND SAID LOT 3, AND FOLLOWING THE EASTERLY RIGHT-OF-WAY LINE OF BENNETT-LAWSON ROAD, NORTH 31 DEGREES 04 MINUTES 23 SECONDS WEST, A DISTANCE OF 551.61 FEET, TO A POINT FOR CORNER, SAID POINT BEING THE MOST NORTHWESTERLY CORNER OF SAID SUBJECT TRACT, SAID POINT ALSO BEING THE INTERSECTION OF THE EASTERLY RIGHT-OF-WAY LINE OF BENNETT-LAWSON ROAD AND THE SOUTHERLY RIGHT-OF-WAY LINE OF RENDON-BLOODWORTH ROAD;

THENCE DEPARTING THE EASTERLY RIGHT-OF-WAY LINE OF BENNETT-LAWSON ROAD, AND FOLLOWING THE SOUTHERLY RIGHT-OF-WAY LINE OF RENDON-BLOODWORTH ROAD, THE FOLLOWING COURSES:

NORTH 75 DEGREES 45 MINUTES 33 SECONDS EAST, A DISTANCE OF 152.51 FEET, TO A POINT FOR CORNER;

SOUTH 15 DEGREES 11 MINUTES 21 SECONDS EAST, PASSING A 1/2-INCH IRON ROD FOUND, AT A DISTANCE OF 0.65 FEET, AND CONTINUING A TOTAL DISTANCE OF 10.00 FEET, TO A 1/2-INCH IRON ROD FOUND;

NORTH 75 DEGREES 43 MINUTES 16 SECONDS EAST, A DISTANCE OF 227.35 FEET, TO A 1/2-INCH CAPPED IRON ROD FOUND, STAMPED "WIER & ASSOC";

NORTH 14 DEGREES 14 MINUTES 26 SECONDS WEST, A DISTANCE OF 9.75 FEET, TO A 1/2-INCH IRON ROD FOUND;

NORTH 75 DEGREES 52 MINUTES 47 SECONDS EAST, A DISTANCE OF 190.56 FEET, TO **THE POINT OF BEGINNING**, AND CONTAINING 283,097.82 SQUARE FEET, OR 6.50 ACRES, MORE OR LESS.

* NOTES *

1. THE PURPOSE OF THIS REPLAT IS TO CREATE ONE (1) LOT OUT OF ONE (1) LOT AND TWO (2) TRACTS OF LAND.
2. BASIS OF BEARING FOR THIS SURVEY IS REFERENCED TO THE TEXAS STATE PLANE COORDINATE SYSTEM, NAD-83, NORTH CENTRAL ZONE 4202, AS OBSERVED ON THE ALLTERRA RTK NETWORK. ALL POINTS IN THIS SURVEY ARE SHOWN ON GRID COORDINATES, NO SCALE AND NO PROJECTION. U.S. FOOT.
3. ALL CIRS ARE 5/8 INCH IRON ROD WITH YELLOW CAP STAMPED "HANNA SURV PLS 6647".
4. ACCORDING TO FLOOD INSURANCE RATE MAP (FIRM) NO. 48439C0455K, DATED 09/25/2009, PREPARED BY THE FEDERAL EMERGENCY MANAGEMENT AGENCY (FEMA), FOR TARRANT COUNTY, TEXAS, UNINCORPORATED AREAS, THIS PROPERTY IS WITHIN ZONE X.
5. WATER SERVICES WILL BE PROVIDED BY TEXAS WATER UTILITIES LP.
6. SEWAGE WILL BE SERVICED BY PRIVATE ON-SITE SEPTIC FACILITIES (OSSF)
7. ALL PARTIES WITH AN INTEREST IN THE TITLE OF THIS PROPERTY HAVE JOINED IN ANY DEDICATION
8. PROPOSED RIGHT-OF-WAY DEDICATION IS CONSISTENT WITH THE RIGHT-OF-WAY WIDTH RECOMMENDED IN THE CITY OF FORT WORTH'S MASTER THOROUGHFARE PLAN.
9. BENNETT LAWSON ROAD RIGHT-OF-WAY DOCUMENT BOOK. 2, PG. 270, OF THE TARRANT COUNTY COMMISSIONERS COURT FIELD BOOKS OF PUBLIC ROADS (T.C.C.C.F.B.P.R.), SHOWING A 50' ROW.
10. TARRANT COUNTY SHALL NOT BE RESPONSIBLE FOR MAINTENANCE OF PRIVATE DRAINAGE EASEMENTS AND SAID OWNERS AGREE TO INDEMNIFY AND SAVE HARMLESS TARRANT COUNTY, FROM CLAIMS, DAMAGES AND LOSSES ARISING OUT OF OR FROM PERFORMANCE OF THE OBLIGATIONS OF SAID OWNERS SET FORTH IN THIS PARAGRAPH.
11. THE OWNER SHALL BE RESPONSIBLE FOR MAINTENANCE OF PRIVATE DRAINAGE EASEMENTS.
12. THE WATER WELL HOUSE ON FORMER TRACT 3A03 IS LOCATED AT ABOUT N: 6895158, E: 2369626, ON NORTH CENTRAL ZONE 4202.

FIELD SURVEY BY: AV, KR	DATE: 10/27/2025	PROJECT NO. 25-1545
DRAWN BY: SK	SCALE: 1" = 50'	SAM@HANNA-SE.COM

HANNA SURVEYING & ENGINEERING LLC.

CLIENT:
WALNUT RIDGE BAPTIST CHURCH INC
1201 SH 360
MANSFIELD, TX 76063
(817) 473-1461
ERIK@WALNUTRIDGE.ORG

SURVEYOR:
HANNA SURVEYING AND ENGINEERING, LLC
SAM HANNA, PE, RPLS
1380 US 287 FRONTAGE RD., STE. 101
MANSFIELD, TX 76063
(682) 553-9474
FIRM NO. 10194633

THIS SURVEY WAS PREPARED WITHOUT THE BENEFIT OF A TITLE COMMITMENT, THEREFORE THERE MAY BE OTHER MATTERS THAT AFFECT THIS PROPERTY THAT ARE NOT SHOWN.

LOT AND BLOCK TABLE						
LOT NO.	BLOCK NO.	AREA, GROSS	AREA, NET	R.O.W. DEDICATION	DRAINAGE EASEMENT	PURPOSE
1R1	1	6.50 ACRE/283,097.82 S.F.	5.91 ACRE/257402.20 S.F.	0.078 ACRE/3,022.39 S.F.	0.512 ACRE/22,313.37 S.F.	COMMERCIAL

I, SAMUEL C. HANNA, DO HEREBY CERTIFY THAT I PREPARED THIS PLAT FROM AN ACTUAL ON-THE-GROUND SURVEY OF THE LAND AS DESCRIBED, AND THAT THE CORNER MONUMENTS SHOWN THEREON WERE PROPERLY PLACED UNDER MY PERSONAL SUPERVISION IN ACCORDANCE WITH THE DEVELOPMENT AND LAND USE REGULATIONS OF TARRANT COUNTY.

STATE OF TEXAS · REGISTERED · SAMUEL C. HANNA · 6647 · PROFESSIONAL LAND SURVEYOR

DATE: 29 OCTOBER 2025

SAMUEL C. HANNA, PE, RPLS
REGISTERED PROFESSIONAL LAND SURVEYOR
TEXAS REGISTRATION NO. 6647

STATE OF TEXAS:
COUNTY OF TARRANT:
DEDICATION

NOW THEREFORE KNOWN TO ALL MEN BY THESE PRESENTS:

THAT I/WE, **WALNUT RIDGE BAPTIST CHURCH**, OWNERS, DO HEREBY BIND THEMSELVES AND THEIR HEIRS, ASSIGNEES, AND SUCCESSORS OF TITLE THIS PLAT DESIGNATING THE HEREINABOVE DESCRIBED PROPERTY AS "J&R ADDITION", AN ADDITION TO TARRANT COUNTY, AND DO HEREBY DEDICATE TO THE PUBLIC USE FOREVER THE STREETS, ALLEYS, AND RIGHT-OF-WAY EASEMENTS SHOWN THEREON, AND DO HEREBY RESERVE THE EASEMENT STRIPS SHOWN ON THIS PLAT FOR THE MUTUAL USE AND ACCOMODATION OF GARBAGE COLLECTION AGENCIES AND ALL PUBLIC UTILITIES DESIRING TO USE OR USING SAME. ANY PUBLIC UTILITY, INCLUDING THE COUNTY, SHALL HAVE THE RIGHT TO REMOVE AND KEEP REMOVED ALL OR PART OF ANY BUILDINGS, FENCES, TREES, SHRUBS, OR OTHER IMPROVEMENTS OR GROWTHS THAT IN ANY WAY ENDANGER OR INTERFERE WITH THE CONSTRUCTION, MAINTENANCE OR EFFICIENCY OF ITS RESPECTIVE SYSTEMS ON ANY OF THESE EASEMENTS STRIPS, AND ANY PUBLIC UTILITY, INCLUDING THE COUNTY, SHALL AT ALL TIMES HAVE THE RIGHT OF INGRESS AND EGRESS TO AND FROM AND UPON THE SAID EASEMENT STRIPS FOR THE PURPOSE OF CONSTRUCTING, RECONSTRUCTING, INSPECTING, PATROLLING, WITHOUT THE NECESSITY AT ANY TIME OF PROCURING THE PERMISSION OF ANYONE.

FURTHERMORE, I/WE CERTIFY THAT ALL PARTIES WITH AN INTEREST IN THE TITLE TO THIS PROPERTY HAVE JOINED IN THIS DEDICATION.

OWNER'S SIGNATURE: _____, ERIK ERBY, MANAGING MEMBER

STATE OF TEXAS:
COUNTY OF Tarrant:

BEFORE ME, THE UNDERSIGNED AUTHORITY, APPEARED **ERIK ERBY**, WHO SWORE ON THEIR OATH THE ABOVE FOREGOING SWORN STATEMENT OF OWNERSHIP WAS TRUE AND CORRECT.

GIVEN UNDER MY HAND AND SEAL OF OFFICE THIS 30 DAY OF October, 2025

NOTARY PUBLIC IN AND FOR THE STATE OF TEXAS

YANEY ANDREA MENDEZ
Notary ID #135533731
My Commission Expires
September 24, 2029

TARRANT COUNTY STANDARD PLAT NOTES:

1. DEVELOPMENT IN UNINCORPORATED TARRANT COUNTY SHALL BE SUBJECT TO APPLICABLE MUNICIPAL REGULATIONS, THE CURRENT TARRANT COUNTY DEVELOPMENT REGULATIONS MANUAL, AND THE TARRANT COUNTY FIRE CODE.
2. TARRANT COUNTY PERMITS REQUIRED PRIOR TO DEVELOPMENT WITHIN THIS SUBDIVISION, AS APPLICABLE, INCLUDE, BUT ARE NOT LIMITED TO, CONSTRUCTION WITHIN THE PUBLIC RIGHTS-OF-WAY, DRIVEWAY ACCESS TO PUBLIC ROADS, DEVELOPMENT WITHIN A DESIGNATED FLOODPLAIN, SALVAGE YARDS, STORMWATER MITIGATION, AND ON-SITE SEWAGE SYSTEMS.
3. ALL DRAINAGE EASEMENTS SHALL BE KEPT CLEAR OF FENCES, BUILDINGS, FOUNDATIONS, PLANTINGS, AND OTHER OBSTRUCTIONS TO THE OPERATION AND MAINTENANCE OF THE DRAINAGE FACILITY. ALL DRAINAGE EASEMENTS THAT ARE ADJACENT AND PARALLEL TO THE RIGHT-OF WAY OF DEDICATED PUBLIC ROADWAYS WILL BE MAINTAINED BY TARRANT COUNTY AS APPROVED BY TARRANT COUNTY TRANSPORTATION SERVICES.
4. THE SITING AND CONSTRUCTION OF WATER WELLS SHALL BE SUBJECT TO THE REGULATIONS OF THE NORTHERN TRINITY GROUNDWATER CONSERVATION DISTRICT.
5. TARRANT COUNTY IS NOT RESPONSIBLE FOR CONFIRMING OR ENSURING THE AVAILABILITY OF GROUNDWATER.
6. ANY EXISTING CREEK, STREAM, RIVER OR DRAINAGE CHANNEL TRAVERSING ALONG OR ACROSS PORTIONS OF THIS ADDITION WILL REMAIN UNOBSTRUCTED AT ALL TIMES AND WILL BE MAINTAINED BY THE ADJACENT PROPERTY OWNER, OR THE HOME OWNERS ASSOCIATION, IF APPLICABLE. THE COUNTY WILL NOT BE RESPONSIBLE FOR THE MAINTENANCE, EROSION CONTROL, AND/OR OPERATION OF SAID DRAINAGE WAYS. THE HOMEOWNERS SHALL KEEP THE ADJACENT DRAINAGE WAYS TRAVERSING THEIR PROPERTY CLEAN AND FREE OF DEBRIS, SILT OR OTHER SUBSTANCES WHICH WOULD RESULT IN UNSANITARY CONDITIONS, AND THE COUNTY SHALL HAVE THE RIGHT OF ENTRY FOR THE PURPOSES OF INSPECTING MAINTENANCE WORK BY THE PROPERTY OWNERS. THE DRAINAGE WAYS ARE OCCASIONALLY SUBJECT TO STORMWATER OVERFLOW DAMAGES RESULTING FROM THE STORMWATER OVERFLOW AND/OR BANK EROSION THAT CANNOT BE IDENTIFIED. THE COUNTY SHALL NOT BE LIABLE FOR ANY DAMAGES RESULTING FROM THE OCCURRENCE OF THESE PHENOMENA, NOR THE FAILURE OF ANY STRUCTURES WITHIN THE DRAINAGE WAYS. THE DRAINAGE WAY CROSSING EACH LOT IS CONTAINED WITHIN THE FLOODPLAIN/DRAINAGE EASEMENT LINE AS SHOWN ON THE PLAT.
7. TARRANT COUNTY SHALL NOT BE RESPONSIBLE FOR THE MAINTENANCE OF PRIVATE STREETS, DRIVES, EMERGENCY ACCESS EASEMENTS, RECREATION AREAS, AND OPEN SPACES; AND THE OWNERS SHALL BE RESPONSIBLE FOR THE MAINTENANCE OF PRIVATE STREETS, DRIVES, EMERGENCY ACCESS EASEMENTS, RECREATION AREAS, AND OPEN SPACES, AND SAID OWNERS AGREE TO INDEMNIFY AND SAVE HARMLESS TARRANT COUNTY FROM ALL CLAIMS, DAMAGES, AND LOSSES ARISING OUT OF OR RESULTING FROM THE PERFORMANCE OF THE OBLIGATIONS OF SAID OWNERS SET FOR IN THIS PARAGRAPH.
8. TARRANT COUNTY DOES NOT ENFORCE SUBDIVISION DEED RESTRICTIONS.
9. LAND OWNERS AND SUBSEQUENT OWNERS OF LOTS OR PARCELS WITHIN THIS SUBDIVISION ARE ENCOURAGED TO CONTACT TARRANT COUNTY'S TRANSPORTATION SERVICES DEPARTMENT PRIOR TO CONDUCTING ANY DEVELOPMENT ACTIVITIES.
10. ANY PUBLIC UTILITY, INCLUDING THE COUNTY, SHALL HAVE THE RIGHT TO REMOVE AND KEEP CLEAR ALL OR PART OF ANY BUILDING, FENCES, TREES, OVERGROWN SHRUBS OR IMPROVEMENTS THAT IN ANY WAY ENDANGER OR INTERFERE WITH THE CONSTRUCTION, MAINTENANCE, OR EFFICIENCY OF ITS RESPECTIVE SYSTEMS ON ANY OF THE EASEMENT OR RIGHT-OF-WAY SHOWN ON THE PLAT (OR FILED BY A SEPARATE INSTRUMENT THAT IS ASSOCIATED WITH SAID PROPERTY); AND ANY PUBLIC UTILITY, INCLUDING THE COUNTY, SHALL HAVE THE RIGHT AT ALL TIMES AN INGRESS AND EGRESS TO AND FROM UPON SAID EASEMENTS FOR THE PURPOSE OF CONSTRUCTION, RECONSTRUCTION, INSPECTION, PATROLLING, MAINTAINING AND ADDING TO OR REMOVING ALL OR PART OF ITS RESPECTIVE SYSTEMS WITHOUT THE NECESSITY AT ANY TIME OF PROCURING THE PERMISSION OF ANYONE. PROPERTY OWNERS SHALL MAINTAIN EASEMENTS. THE COUNTY CAN REMOVE TREES OR ANY OTHER IMPROVEMENT(S) AND DOES NOT HAVE THE RESPONSIBILITY TO REPLACE THEM.
11. TARRANT COUNTY REQUIRES A MINIMUM LOT SIZE OF 1.0 ACRE (NET) FOR PROPERTIES THAT ARE NOT SERVED BY A PUBLIC WATER SYSTEM, AND THAT WILL BE SERVED BY PRIVATE ON-SITE SEWAGE FACILITIES (OSSF). FOR LOTS THAT ARE LESS THAN 1.0 ACRE (NET) AND NOT SERVED BY A PUBLIC WATER SYSTEM, LANDOWNERS SHALL SUBMIT A FORMAL REQUEST FOR A VARIANCE OF THE TARRANT COUNTY DEVELOPMENT REGULATIONS RELATING TO LOT SIZE AND A WRITTEN AUTHORIZATION FROM TARRANT COUNTY PUBLIC HEALTH CONFIRMING THAT IT HAS NO OBJECTIONS WITH THE PROCESSING OF THE PLAT. THE APPROVAL OF THIS PLAT DOES NOT GUARANTEE THAT ANY LOT IS SUITABLE FOR AN OSSF.
12. TARRANT COUNTY DOES NOT ENFORCE BUILDING SETBACKS MORE THAN THE COUNTY'S MINIMUM REQUIREMENTS – 25 FEET FROM ROW FOR COUNTY ROADS AND 50 FEET FROM ROW FOR STATE HIGHWAYS. (TLGC 233.031-233.032)

COMMISSIONERS COURT
TARRANT COUNTY, TEXAS

PLAT APPROVAL DATE: 11/18/2025

BY:
☐ CLERK OF COMMISSIONERS COURT
☒ TRANSPORTATION SERVICES DEPARTMENT

NOTE:
CONSTRUCTION NOT COMPLETED WITHIN TWO YEARS OF THE RECORDING DATE SHALL BE SUBJECT TO CURRENT COUNTY SUBDIVISION STANDARDS AND REGULATIONS.

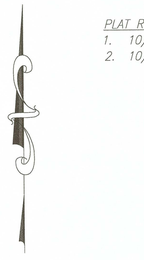

50' 0 50' 100'
GRAPHIC SCALE IN FEET
1" = 50'

PLAT REVISION:
1. 10/16/2025
2. 10/27/2025

FINAL PLAT
LOT 1R1, BLOCK 1,
J&R ADDITION, AN ADDITION TO TARRANT COUNTY, TEXAS, RECORDED IN INSTRUMENT NUMBER D220267887, P.R.T.C.T.
BEING A TRACT OF LAND OUT OF THE MCNARY GIBSON SURVEY, ABSTRACT NO. 621, TARRANT COUNTY, TEXAS
SEPTEMBER 2025

PAGE 1 OF 2

CASE NO. TCP-25-012

* LEGEND *

SUBJECT PROPERTY LINE	
ADJOINER PROPERTY LINE	
PREVIOUS PROPERTY LINE	
EASEMENT	
CENTERLINE	

CIRF	CAPPED IRON ROD FOUND
CIRS	CAPPED IRON ROD SET
IRF	IRON ROD FOUND
IRF	IRON PIPE FOUND
(C.M.)	CONTROLLING MONUMENT
PFC	POINT FOR CORNER
D.R.T.C.T.	DEED RECORDS, TARRANT COUNTY, TEXAS
P.R.T.C.T.	PLAT RECORDS, TARRANT COUNTY, TEXAS
INST#	INSTRUMENT NUMBER
VOL.	VOLUME
PG.	PAGE
P.O.B.	POINT OF BEGINNING
R.O.W.	RIGHT-OF-WAY
CONC.	CONCRETE
ELEC.	ELECTRIC
ESMT.	EASEMENT
CAB.	CABINET
SL.	SLIDE
U.E.	UTILITY EASEMENT
D.E.	DRAINAGE EASEMENT
P.J.R.R.	PER J&R ADDITION REPLAT, INSTRUMENT NUMBER D220267887, P.R.T.C.T.

20' 0 20' 40'

GRAPHIC SCALE IN FEET
1" = 20'

VARIABLE WIDTH DRAINAGE EASEMENT

Parcel Line Table		
Line #	Length	Direction
L20	35.24	S64° 23' 53"W
L21	24.72	S66° 05' 10"W
L22	54.61	S78° 46' 34"W
L23	111.08	S69° 50' 14"W
L24	105.54	S67° 20' 31"W
L25	27.05	S67° 34' 58"W
L26	57.72	S72° 05' 19"W
L27	55.08	S62° 36' 53"W
L28	42.06	S57° 06' 13"W
L29	103.04	S7° 15' 56"E
L30	33.79	N30° 59' 48"W

20FT UTILTY AND ACCESS EASEMENT

Parcel Line Table		
Line #	Length	Direction
L40	20.00	N75° 52' 47"E
L41	25.17	S14° 12' 08"E
L42	80.23	S76° 08' 20"E
L43	42.21	S46° 33' 07"E
L44	74.60	S15° 57' 24"E
L45	16.72	S2° 09' 28"W
L46	68.27	S55° 32' 11"E
L47	7.81	N76° 41' 52"E
L48	20.14	S19° 29' 01"E
L49	18.83	S76° 41' 52"W
L50	88.14	N55° 32' 11"W
L51	24.55	N2° 09' 28"E
L52	65.94	N15° 57' 24"W
L53	31.46	N46° 33' 07"W
L54	86.95	N76° 08' 20"W
L55	37.20	N14° 12' 08"W

12FT ACCESS EASEMENT

Parcel Line Table		
Line #	Length	Direction
L60	18.21	N13° 43' 52"W
L61	23.42	N27° 21' 43"W
L62	31.14	N81° 14' 05"W
L63	43.11	N74° 43' 00"W
L64	18.47	N52° 27' 30"W
L65	29.47	N25° 14' 50"W
L66	17.42	N64° 26' 00"W
L67	14.71	S65° 16' 16"W
L68	12.00	N30° 38' 09"W
L69	21.58	N65° 06' 07"E
L70	27.32	S64° 26' 00"E
L71	30.84	S25° 14' 50"E
L72	13.21	S52° 27' 30"E
L73	40.07	S74° 43' 00"E
L74	36.55	S81° 14' 05"E
L75	30.95	S27° 21' 43"E
L76	19.56	S13° 43' 52"E

3FT UTILITY EASEMENT

Parcel Line Table		
Line #	Length	Direction
L80	39.48	N31° 09' 48"W
L81	3.00	N58° 50' 12"E
L82	39.48	S31° 09' 48"E
L83	3.00	S58° 50' 12"W

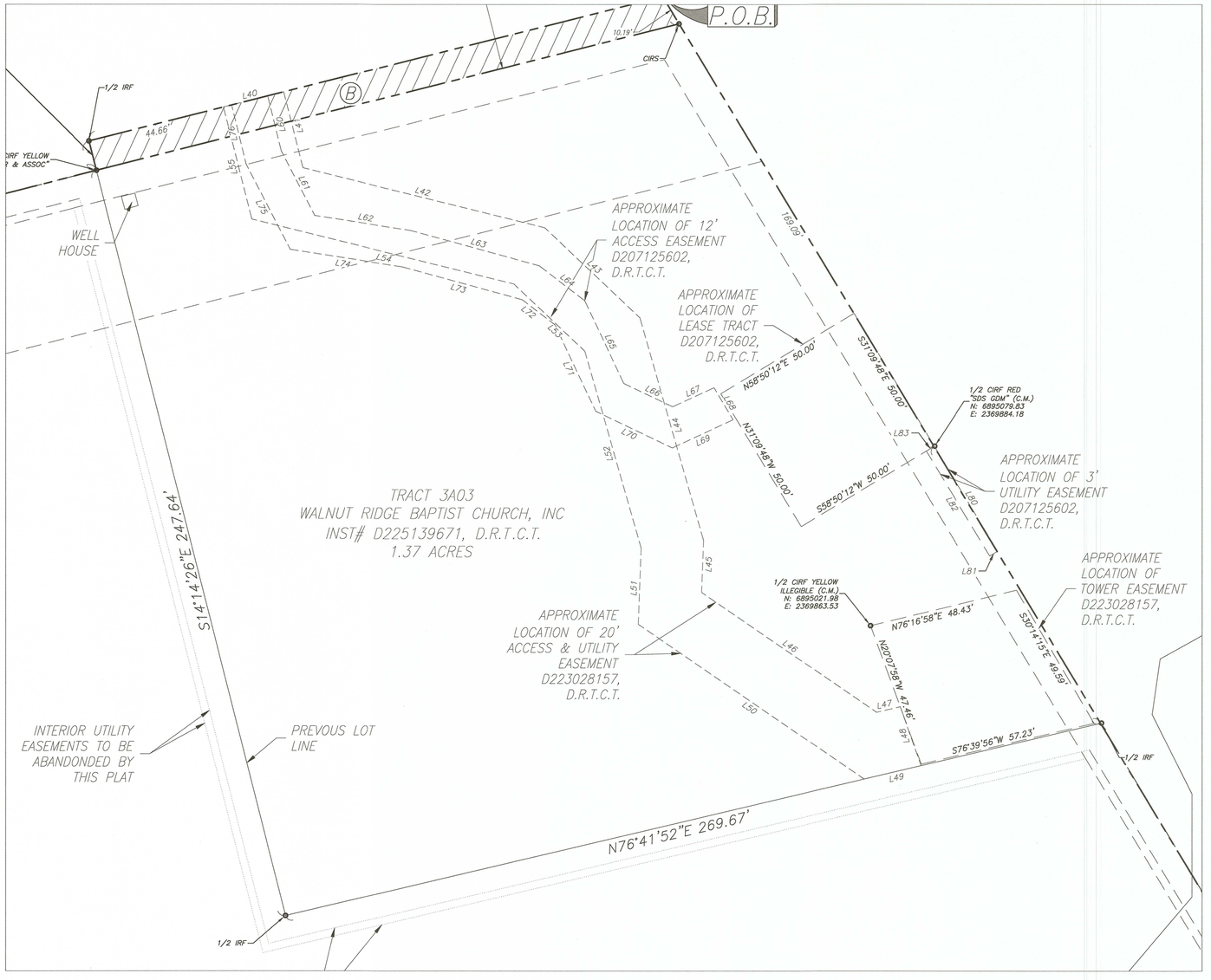

DETAIL A

* NOTES *

1. THE PURPOSE OF THIS REPLAT IS TO CREATE ONE (1) LOT OUT OF ONE (1) LOT AND TWO (2) TRACTS OF LAND.
2. BASIS OF BEARING FOR THIS SURVEY IS REFERENCED TO THE TEXAS STATE PLANE COORDINATE SYSTEM, NAD-83, NORTH CENTRAL ZONE 4202, AS OBSERVED ON THE ALLTERRA RTK NETWORK. ALL POINTS IN THIS SURVEY ARE SHOWN ON GRID COORDINATES, NO SCALE AND NO PROJECTION, U.S. FOOT.
3. ALL CIRS ARE 5/8 INCH IRON ROD WITH YELLOW CAP STAMPED "HANNA SURV PLS 6647".
4. ACCORDING TO FLOOD INSURANCE RATE MAP (FIRM) NO. 48439C0455K, DATED 09/25/2009, PREPARED BY THE FEDERAL EMERGENCY MANAGEMENT AGENCY (FEMA), FOR TARRANT COUNTY, TEXAS, UNINCORPORATED AREAS, THIS PROPERTY IS WITHIN ZONE X.
5. WATER SERVICES WILL BE PROVIDED BY TEXAS WATER UTILITIES LP.
6. SEWAGE WILL BE SERVICED BY PRIVATE ON-SITE SEPTIC FACILITIES (OSSF)
7. ALL PARTIES WITH AN INTEREST IN THE TITLE OF THIS PROPERTY HAVE JOINED IN ANY DEDICATION
8. PROPOSED RIGHT-OF-WAY DEDICATION IS CONSISTENT WITH THE RIGHT-OF-WAY WIDTH RECOMMENDED IN THE CITY OF FORT WORTH'S MASTER THOROUGHFARE PLAN.
9. BENNETT LAWSON ROAD RIGHT-OF-WAY DOCUMENT BOOK. 2, PG. 270, OF THE TARRANT COUNTY COMMISSIONERS COURT FIELD BOOKS OF PUBLIC ROADS (T.C.C.C.F.B.P.R.), SHOWING A 50' ROW.
10. TARRANT COUNTY SHALL NOT BE RESPONSIBLE FOR MAINTENANCE OF PRIVATE DRAINAGE EASEMENTS AND SAID OWNERS AGREE TO INDEMNIFY AND SAVE HARMLESS TARRANT COUNTY, FROM CLAIMS, DAMAGES AND LOSSES ARISING OUT OF OR FROM PERFORMANCE OF THE OBLIGATIONS OF SAID OWNERS SET FORTH IN THIS PARAGRAPH.
11. THE OWNER SHALL BE RESPONSIBLE FOR MAINTENANCE OF PRIVATE DRAINAGE EASEMENTS.
12. THE WATER WELL HOUSE ON FORMER TRACT 3A03 IS LOCATED AT ABOUT N: 6895158, E: 2369626, ON NORTH CENTRAL ZONE 4202.

FIELD SURVEY BY: AV, KR | DATE: 10/27/2025 | PROJECT NO. 25-1545
DRAWN BY: SK | SCALE: 1" = 20' | SAM@HANNA-SE.COM

HANNA SURVEYING & ENGINEERING LLC.

I, SAMUEL C. HANNA, DO HEREBY CERTIFY THAT I PREPARED THIS PLAT FROM AN ACTUAL ON-THE-GROUND SURVEY OF THE LAND AS DESCRIBED, AND THAT THE CORNER MONUMENTS SHOWN THEREON WERE PROPERLY PLACED UNDER MY PERSONAL SUPERVISION IN ACCORDANCE WITH THE DEVELOPMENT AND LAND USE REGULATIONS OF TARRANT COUNTY.

STATE OF TEXAS · REGISTERED · SAMUEL C. HANNA · 6647 · PROFESSIONAL LAND SURVEYOR

DATE: 29 OCTOBER 2025

SAMUEL C. HANNA, PE, RPLS
REGISTERED PROFESSIONAL LAND SURVEYOR
TEXAS REGISTRATION NO. 6647

CLIENT:
WALNUT RIDGE BAPTIST CHURCH INC
1201 SH 360
MANSFIELD, TX 76063
(817) 473-1461
ERIK@WALNUTRIDGE.ORG

SURVEYOR:
HANNA SURVEYING AND ENGINEERING, LLC
SAM HANNA, PE, RPLS
1380 US 287 FRONTAGE RD., STE. 101
MANSFIELD, TX 76063
(682) 553-9474
FIRM NO. 10194633

THIS SURVEY WAS PREPARED WITHOUT THE BENEFIT OF A TITLE COMMITMENT, THEREFORE THERE MAY BE OTHER MATTERS THAT AFFECT THIS PROPERTY THAT ARE NOT SHOWN.

FINAL PLAT
LOT 1R1, BLOCK 1,
J&R ADDITION, AN ADDITION TO TARRANT COUNTY, TEXAS, RECORDED IN INSTRUMENT NUMBER D220267887, P.R.T.C.T.
BEING A TRACT OF LAND OUT OF THE MCNARY GIBSON SURVEY, ABSTRACT NO. 621, TARRANT COUNTY, TEXAS
SEPTEMBER 2025

CASE NO. TCP-25-012

H:\2025\25-1545 - 7560 Bonnie Blackwell Tr\Survey\25-1545 - Bonnie Blackwell Plat.dwg


Willow Branch
Rendon Bloodworth Rd
Bennett Lawson Rd
J & R Addition
J & R Addition
Lot 1R1, Block 1
Zone A
UNINCORPORATED
Pct 2
J & R Addition
Bennett Lawson Rd
Tarrant County
Transportation
Services
Subdivisions
Subject of Interest
Zone A 2023
Zone AE 2023
Floodway 2023
This data was prepared by Tarrant County for general reference purposes only and may be revised at any time without notification to any user Tarrant County does not guarantee the correctness or accuracy of any data. Tarrant County assumes no responsibility in connection therewith.
Microsoft, Vantor, Esri Community Maps Contributors, Baylor University, City of Fort Worth, Texas Parks & Wildlife, © OpenStreetMap, Microsoft, CONANP, Esri, TomTom, Garmin, SafeGraph, GeoTechnologies, Inc, METI/NASA, USGS, EPA, NPS, US Census Bureau, USDA, USFWS

TARRANT COUNTY
COMMISSIONERS COURT COMMUNICATION

Court Date: December 9, 2025	**Court Order #:**	**Page:** 1 of 1
Department: Commissioner, Precinct 1	**Prepared By:** Jamal Williams	**Approved By:** Jamal Williams

SUBJECT:

Consideration of a Grant Agreement between Tarrant County and The National Coalition of 100 Black Women, Inc. Fort Worth Metropolitan Chapter to Provide Support Services to Tarrant County Residents

*****CONSENT AGENDA *****

COMMISSIONERS COURT ACTION REQUESTED

It is requested that the Commissioners Court approve a grant agreement between Tarrant County and The National Coalition of 100 Black Women, Inc. Fort Worth Metropolitan Chapter to provide support services to the residents of Tarrant County.

BACKGROUND

Commissioner, Precinct 1's Community Outreach Program was created to support proactive and hardworking organizations in Tarrant County. The program targets organizations whose goals are to better the community and help citizens in need. Some examples of related initiatives may include Youth Programs, Public Health (Physical and Mental), Housing, and Education.

The National Coalition of 100 Black Women, Inc. Fort Worth Metropolitan Chapter has been selected to receive Precinct 1 Community Outreach Program funds to support their Aspiring Pearls Mentorship Program. This program provides year-long mentorship, guidance, and skill-building opportunities for young girls ages 12–17. Through workshops on STEAM, financial literacy, goal setting, college preparation, entrepreneurship, and civic engagement, it helps participants build confidence, set future goals, and access resources and role models who support their academic and career development.

FISCAL IMPACT

Funding in the amount of $3,000.00 is available in account 10000-2026/General Fund/6110100000/Precinct 1 General/579061 County Projects.

PASSED AND APPROVED on December 9, 2025.

COUNTY OF TARRANT
STATE OF TEXAS

By: Separate Electronic Signature Page
Tim O'Hare
County Judge

APPROVED AS TO FORM:

_____
District Attorney's Office*

*By law, the District Attorney's Office may only approve contracts for its clients. We reviewed this document as to form from our client's legal perspective. Other parties may not rely on this approval. Instead, those parties should seek contract review from independent counsel.

Attachments

12-09-25 Aspiring Pearls Agreement.pdf

THE STATE OF TEXAS §
§
COUNTY OF TARRANT §

AGREEMENT

WHEREAS, **THE NATIONAL COALITION OF 100 BLACK WOMEN, INC. FORT WORTH METROPOLITAN CHAPTER** is a nonprofit organization that empowers women and girls through advocacy, mentorship, and leadership development. The organization addresses equity in health, education, and economic opportunity by providing targeted programs and community services. Its flagship Aspiring Pearls Mentorship Program equips girls ages 12–17 with skills, guidance, and resources to support their academic success and future career pathways

WHEREAS, the Tarrant County Commissioners Court hereby finds that the program provided by **THE NATIONAL COALITION OF 100 BLACK WOMEN, INC. FORT WORTH METROPOLITAN CHAPTER** benefits the residents of Tarrant County, Texas, and hereby declares that this **Agreement** is one of a professional service;

NOW, THEREFORE, this **Agreement** is made and entered into this 14th day of October 2025, by and between **THE NATIONAL COALITION OF 100 BLACK WOMEN, INC. FORT WORTH METROPOLITAN CHAPTER** acting by and through its duly authorized agent, and **TARRANT COUNTY, TEXAS ("COUNTY")**, acting by and through its County Judge.

THE NATIONAL COALITION OF 100 BLACK WOMEN, INC. FORT WORTH METROPOLITAN CHAPTER and the **COUNTY** agree as follows:

1. **THE NATIONAL COALITION OF 100 BLACK WOMEN, INC. FORT WORTH METROPOLITAN CHAPTER** will provide mentorship, leadership development, and educational programming that equip young girls with the skills and confidence needed to pursue academic and career success. Through workshops, resources, and community partnerships, they help strengthen pathways to opportunity for youth across Tarrant County.

2. **COUNTY**, for and in consideration of the services provided, agrees to pay to **THE NATIONAL COALITION OF 100 BLACK WOMEN, INC. FORT WORTH METROPOLITAN CHAPTER** a lump sum payment of **$3,000.00** for services rendered to the residents of Tarrant County, Texas for the fiscal year beginning October 1, 2025, and ending September 30, 2026.

3. **TO THE EXTENT ALLOWED BY TEXAS LAW, THE NATIONAL COALITION OF 100 BLACK WOMEN, INC. FORT WORTH METROPOLITAN CHAPTER HEREBY AGREES TO INDEMNIFY AND HOLD HARMLESS COUNTY, ITS OFFICERS, AGENTS, OFFICIALS, AND EMPLOYEES FROM ANY LOSS, DAMAGE, INJURY OR CLAIM ARISING FROM THE NEGLIGENT OPERATION OF ITS PROGRAM. SAID INDEMNIFICATION WILL INCLUDE, BUT NOT BE LIMITED TO, ALL AMOUNTS OF ALL CLAIMS, ATTORNEYS' FEES, AND COSTS OF COURT.**

4. Nothing contained in this **Agreement** shall be deemed or construed by the parties hereto, nor by any third party, as creating the relationship of principal and agent,

partnership, joint enterprise, common enterprise, joint venture, joint owners, or joint tenants between the parties. The parties hereby declare and acknowledge that the relationship existing is one of independent contractor. This **Agreement** does not and shall not be construed to entitle either party or any of their respective employees or officials, if applicable, to any benefit, privilege or other amenities of employment from the other party.

5. This **Agreement** shall not be interpreted to inure to the benefit of a third party not a party to this **Agreement**. This **Agreement** may not be interpreted to waive any statutory or common law defense, immunity, including governmental and sovereign immunity, or any limitation of liability, responsibility, or damage of any party to this **Agreement**, party's agent, or party's employee, otherwise provided by law.

6. The parties to this **Agreement** will not sell, assign, transfer or convey any benefits or obligations of this **Agreement** in whole or part without the prior written consent of both parties.

7. If any one or more of the provisions contained in this **Agreement**, for any reason, be held to be invalid, illegal or unenforceable in any respect, such invalidity, illegality or unenforceability will not affect any other provision of this **Agreement**.

8. This **Agreement** constitutes the entire agreement between the parties, and any and all prior negotiations are merged into this **Agreement**. Any amendment, change, or addition to this **Agreement** shall be made only in writing and signed by both parties.

9. This **Agreement** will be governed by and construed according to the laws of the State of Texas. Venue for any action or claim arising from this **Agreement** will be in Tarrant County, Texas, as to state court actions, and the United States District Court for the Northern District of Texas, as to federal court actions.

10. In providing the services required by this **Agreement**, **THE NATIONAL COALITION OF 100 BLACK WOMEN, INC. FORT WORTH METROPOLITAN CHAPTER** must observe and comply with all applicable federal, state, and local statutes, ordinances, rules, and regulations, including, without limitation, workers' compensation laws, minimum and maximum salary and wage statutes and regulations, and non-discrimination laws and regulations. **THE NATIONAL COALITION OF 100 BLACK WOMEN, INC. FORT WORTH METROPOLITAN CHAPTER** shall be responsible for ensuring its compliance with any laws and regulations applicable to its business, including maintaining any necessary licenses and permits.

11. **THE NATIONAL COALITION OF 100 BLACK WOMEN, INC. FORT WORTH METROPOLITAN CHAPTER** agrees to provide **COUNTY** all records relating to the programs performed by **THE NATIONAL COALITION OF 100 BLACK WOMEN, INC. FORT WORTH METROPOLITAN CHAPTER** upon written request of **COUNTY** and to provide a final report detailing the manner in which such funds are expended and the program details of its services.

12. **THE NATIONAL COALITION OF 100 BLACK WOMEN, INC. FORT WORTH METROPOLITAN CHAPTER COUNTY** shall use the aforementioned lump sum payment of **$3,000.00** by **COUNTY** to support their Aspiring Pearls Mentorship Program, which provides year-long mentorship, guidance, and skill-building opportunities for young girls

ages 12–17. Through workshops on STEAM, financial literacy, goal setting, college preparation, entrepreneurship, and civic engagement, it helps participants build confidence, set future goals, and access resources and role models who support their academic and career development.

13. **THE NATIONAL COALITION OF 100 BLACK WOMEN, INC. FORT WORTH METROPOLITAN CHAPTER** must submit to **COUNTY** a final report as to the program outcomes achieved within sixty (60) days of the end of the requested funding year (by November 30, 2026) by providing the following:

    (a) a program update on all outcomes accomplished and client populations served; and,
    (b) an accounting of all expenditures of **COUNTY** funds (salary, rent, training, etc.). *Any funds not used for the specified purposes or not used within the time limits specified in this contract are subject to be returned to **COUNTY**.*

    Until receipt of this final report by **COUNTY,** all subsequent funding will be held in abeyance.

14. **THE NATIONAL COALITION OF 100 BLACK WOMEN, INC. FORT WORTH METROPOLITAN CHAPTER** verifies that it does not boycott Israel and will not boycott Israel during the term of this contract. The term "boycott Israel" is as defined by Texas Government Code Section 808.001, effective September 1, 2017.

15. **THE NATIONAL COALITION OF 100 BLACK WOMEN, INC. FORT WORTH METROPOLITAN CHAPTER** acknowledges and agrees that it has fully, accurately, and completely disclosed all interested parties in the attached Form 1295 and has acknowledged the completeness of this disclosure by filing the Form 1295, attached as Exhibit A, with the Texas Ethics Commission as required by law.

16. This agreement may be executed in one or more counterparts, each of which will be deemed to be an original copy of this agreement, and all of which, when taken together, shall be deemed to constitute one and the same agreement. The exchange of copies of this agreement and of signature pages by electronic transmission shall constitute effective execution and delivery of this agreement as to the parties and may be used in lieu of the original agreement for all purposes. Signatures of the parties transmitted or executed electronically shall be deemed to be their original signatures for any purpose whatsoever.

17. In providing the services required by this Agreement, State and Local Government shall observe and comply with all applicable federal, state, and local statutes, ordinances, rules, and regulations, including without limitation, workers' compensation laws, minimum and maximum salary and wage statutes and regulations, and non-discrimination laws and regulations. State and Local Government shall be responsible for ensuring its compliance with any laws and regulations applicable to its business, including maintaining any necessary licenses and permits.

_____

Dorice Ramsey
Member,
The National Coalition Of 100 Black Women, Inc. Fort Worth Metropolitan Chapter

PASSED AND APPROVED on _____.

COUNTY OF TARRANT
STATE OF TEXAS

By: Separate Electronic Signature Page
Tim O'Hare
County Judge

APPROVED AS TO FORM:

Separate Electronic Signature Page
District Attorney's Office*

*By law, the District Attorney's Office may only approve contracts for its clients. We reviewed this document as to form from our client's legal perspective. Other parties may not rely on this approval. Instead, those parties should seek contract review from independent counsel.

CERTIFICATION OF FUNDS IN THE AMOUNT OF $3,000.00

Separate Electronic Signature Page
Auditor

TARRANT COUNTY
COMMISSIONERS COURT COMMUNICATION

Court Date: December 9, 2025	**Court Order #:**	**Page:** 1 of 1
Department: Commissioner, Precinct 1	**Prepared By:** Jamal Williams	**Approved By:** Jamal Williams

SUBJECT:

Consideration of Amendment No. 1 to Community Grant Agreement between Tarrant County and Crowley ISD to Provide Support Services to Tarrant County Residents

*****CONSENT AGENDA *****

COMMISSIONERS COURT ACTION REQUESTED

It is requested that the Commissioners Court approve Amendment No. 1 to the Community Grant Agreement between Tarrant County and Crowley ISD to provide support services to the residents of Tarrant County.

BACKGROUND

Commissioner, Precinct 1's Community Outreach Program was created to support proactive and hardworking organizations in Tarrant County. The program targets organizations whose goals are to better the community and help citizens in need. Some examples of related initiatives may include Youth Programs, Public Health (Physical and Mental), Housing, and Education.

On October 14, 2025, the Commissioners Court, through Court Order #146149, approved a Community Grant Agreement with Crowley ISD to provide funding in the amount of $5,000.00 to support the Mind Over Medals Mental Health Summit, which is designed to address the mental health needs of student-athletes, fine arts students, and their families. These groups face unique pressures that, if not supported, can significantly impact academic success, emotional health, and long-term well-being. Student-athletes and fine arts performers are often defined by achievement and perfection, balancing rigorous practice and performance schedules with demanding academic expectations. This reality can lead to increased stress, burnout, anxiety, and in some cases, unhealthy coping strategies. The summit provides students with practical tools to manage stress, build resilience, maintain balance, and seek help when needed.

If approved, Amendment No. 1 will provide additional funding in the amount of $5,000.00 to further support Crowley ISD's Mind Over Medals Mental Health Summit. All other terms remain in effect.

The District Attorney's Office has reviewed as to form.

FISCAL IMPACT

Funding in the amount of $5,000.00 is available in account 10000-2026/General Fund/6110100000/Precinct 1 General/579061 County Projects.

PASSED AND APPROVED on December 9, 2025.

COUNTY OF TARRANT
STATE OF TEXAS

By: Separate Electronic Signature Page
Tim O'Hare
County Judge

APPROVED AS TO FORM:

_____
District Attorney's Office*

*By law, the District Attorney's Office may only approve contracts for its clients. We reviewed this document as to form from our client's legal perspective. Other parties may not rely on this approval. Instead, those parties should seek contract review from independent counsel.

Attachments

Amendment No 1 to the CISD Community Grant Agreement.pdf

STATE OF TEXAS	**§**	**Community Grant Agreement (Commissioner, Precinct 1)**
	§	**Community Partner – Crowley Independent School District**
COUNTY OF TARRANT	**§**	**Current Effective Dates: 10/01/2025 – 09/20/2026**

AMENDMENT NO. 1 TO THE COMMUNITY GRANT AGREEMENT BETWEEN TARRANT COUNTY AND CROWLEY INDEPENDENT SCHOOL DISTRICT

This amendment revises the Commissioner, Precinct 1 **COMMUNITY GRANT AGREEMENT** with **CROWLEY INDEPENDENT SCHOOL DISTRICT (CROWLEY ISD)** (the "Agreement") as follows:

1. Section 2 of the Agreement is revised by increasing the total lump sum payment for services rendered to residents of Tarrant County from $5,000.00 to $10,000.00.

The COUNTY will pay CROWLEY ISD no more than $10,000.00 for the term of October 1, 2025 through September 30, 2026.

All other terms and conditions not amended or deleted remain in full force and effect for the duration of the agreement.

This agreement may be executed in one or more counterparts, each of which will be deemed to be an original copy of this agreement, and all of which, when taken together, shall be deemed to constitute one and the same agreement. The exchange of copies of this agreement and of signature pages by electronic transmission shall constitute effective execution and delivery of this agreement as to the parties and may be used in lieu of the original agreement for all purposes. Signatures of the parties transmitted or executed electronically shall be deemed to be their original signatures for any purpose whatsoever.

_____

Trina Lane
Executive Director of Counseling Services
Crowley ISD

PASSED AND APPROVED on _____.

COUNTY OF TARRANT
STATE OF TEXAS

By: Separate Electronic Signature Page
Tim O'Hare
County Judge

APPROVED AS TO FORM:

Separate Electronic Signature Page
District Attorney's Office*

*By law, the District Attorney's Office may only approve contracts for its clients. We reviewed this document as to form from our client's legal perspective. Other parties may not rely on this approval. Instead, those parties should seek contract review from independent counsel.

CERTIFICATION OF FUNDS IN THE AMOUNT OF $_____

Separate Electronic Signature Page
Auditor

TARRANT COUNTY
COMMISSIONERS COURT COMMUNICATION

Department: Commissioner, Precinct 3	**Prepared By:** Ariana Raines, Assistant Precinct Administrator	**Approved By:** Ariana Raines, Assistant Precinct Administrator

SUBJECT:

Consideration of Agreements with Various Organizations for the Provision of Transportation Services to the Residents of Tarrant County, Precinct 3

*****CONSENT AGENDA *****

COMMISSIONERS COURT ACTION REQUESTED

It is requested that the Commissioners Court consider the following agreements to provide transportation services to the residents of Tarrant County, Precinct 3.

Organization	Contract Amount
HEB Transit	$8,000.00
Northeast Transportation Service (NETS)	$8,000.00

BACKGROUND

Throughout the County, elderly residents often find it difficult to obtain transportation services for routine medical appointments, shopping excursions, banking, and other essential trips. Transportation assistance can help the elderly population preserve independence and maintain quality of life.

The following entities will provide various transportation services to the residents of Tarrant County, Precinct 3:

Catholic Charities Diocese of Fort Worth (On Behalf of Heb Transit)
HEB Transit, through sponsorship by Catholic Charities, provides low-cost transportation service, at a rate of$3.00 each way or $6.00 round trip, for HEB residents who need assistance with trips to work or work-related activities, such as job interviews, training, education and childcare. Eligible trips include those that begin and end within HEB, as well as trips to the Trinity Railway Express (TRE) stations at Hurst/Bell and CentrePort/DFW Airport.

Northeast Transportation Service (NETS)
NETS is a partnership of the cities of Bedford, Euless, Grapevine, Haltom City, Hurst, Keller and North Richland Hills. NETS is a door-to-door, demand responsive para-transit service and is available to any resident of a participating city who is disabled or 65 years of age or older. NETS may be used for medical appointments, socialization, employment, essential shopping and education purposes

Each entity must expend these funds for the outlined services within twelve (12) months of execution of the contract. In addition, each entity must submit to Tarrant County a final report as to the program outcomes achieved within sixty (60) days of the end of the requested funding year.

All contracts have been approved as to form by the Criminal District Attorney's Office.

FISCAL IMPACT

Funding in the amount of $16,000.00 is available in account 10000-2026 General Fund/6310100000 Precinct 3 General/579061 County Projects.

PASSED AND APPROVED on December 9, 2025.

COUNTY OF TARRANT
STATE OF TEXAS

By: Separate Electronic Signature Page
Tim O'Hare
County Judge

APPROVED AS TO FORM:

_____
District Attorney's Office*

*By law, the District Attorney's Office may only approve contracts for its clients. We reviewed this document as to form from our client's legal perspective. Other parties may not rely on this approval. Instead, those parties should seek contract review from independent counsel.

Attachments

HEB Transit Agreement COMPLETED.pdf
HEB Transit 1295 form.pdf
NETS Agreement COMPLETED.pdf

AGREEMENT

THE STATE OF TEXAS §
§ KNOW ALL MEN BY THESE PRESENTS
COUNTY OF TARRANT §

THIS AGREEMENT, made and entered by and between **CATHOLIC CHARITIES, DIOCESE OF FORT WORTH, INC. ("CATHOLIC CHARITIES")** acting herein by and through its duly authorized agent and officer, and **TARRANT COUNTY, TEXAS ("COUNTY").**

FINDINGS

WHEREAS, there is limited public transportation in the cities of Hurst, Euless, and Bedford, to transport citizens of these cities to work and work-related activities;

WHEREAS, a need exists to provide this service to ensure the viability and continued economic development of these cities;

WHEREAS, the North Central Texas Council of Governments (NCTCOG) formerly provided administrative authority to **HEB Transit** and had obtained grant funds from the **COUNTY** from 2011 to 2013 to administer this program;

WHEREAS, in 2014, **CATHOLIC CHARITIES** began serving as administrative authority of **HEB Transit** and continues to provide transportation services to this area in partnership with United Way of Tarrant County, the cities of Hurst, Euless and Bedford, and multiple faith-based organizations;

WHEREAS, **HEB Transit** provides dependable, demand-responsive service for those who require assistance in getting to and from their place of work in order to afford them the opportunity to be self-sufficient;

WHEREAS, **HEB Transit** offers these services at a low-cost rate of $3.00 each way or $6.00 round trip in the cities of Hurst, Euless, and Bedford with additional service to the Trinity Railway Express stations at Centreport/DFW Airport and Hurst/Bell stations (hereinafter referred to as "Transportation Services");

WHEREAS, the Tarrant County Commissioners Court finds that an important segment of our society benefits from the activities of **HEB Transit**; and

WHEREAS, **CATHOLIC CHARITIES** acknowledges and agrees that it has fully, accurately, and completely disclosed all interested parties in the attached Form 1295, and has acknowledged the completeness of this disclosure by filing the Form 1295, attached as Exhibit A, with the Texas Ethics Commission as required by law."

NOW, THEREFORE, in order for HEB Transit to provide and continue to provide Transportation Services, **COUNTY** and **CATHOLIC CHARITIES** agree to the following terms:

Document ID: 2076430da796fd562d32edcd40144032b65dfa048c571bfe3d14022a4d50bdcc

I.

COUNTY will pay to **CATHOLIC CHARITIES** a lump sum payment of **$8,000.00** for Transportation Services, to be used specifically for providing demand-response transportation services to access employment supportive services, such as employment, job interviews, training, education, and childcare, for the residents and service areas of Bedford, Euless, and Hurst. **CATHOLIC CHARITIES** must expend these funds for these specific Transportation Services within 12 months of execution of this Agreement. **CATHOLIC CHARITIES** will reimburse **COUNTY** for any funds not expended for these Services within this time period.

II.

CATHOLIC CHARITIES AGREES TO INDEMNIFY AND HOLD HARMLESS COUNTY, HARMLESS COUNTY, ITS OFFICIALS, AGENTS, SERVANTS, OR EMPLOYEES AGAINST ANY AND ALL NEGLIGENCE, LIABILITY, LOSS, COSTS, CLAIMS, ATTORNEY FEES OR EXPENSES ARISING OUT OF THE WRONGFUL AND NEGLIGENCT ACT(S) OF COMMISSION OR OMISSION OF CALL A RIDE SOUTHLAKE, ITS AGENTS, EMPLOYEES, INTERNS, SUBCONTRACTORS OR VOLUNTEERS ARISING FROM THE ACTIVITIES UNDER THIS AGREEMENT.

III.

Nothing contained in this Agreement shall be deemed or construed by the parties hereto, nor by any third party, as creating the relationship of principal and agent, partnership, joint enterprise, common enterprise, joint venture, joint owners, or joint tenants between the parties. The parties hereby declare and acknowledge that the relationship existing is one of independent contractor. This Agreement does not and shall not be construed to entitle either party or any of their respective employees or officials, if applicable, to any benefit, privilege or other amenities of employment from the other party.

IV.

The parties to this Agreement do not intend to create any third party beneficiaries of the Agreement of the rights contained herein. No person who is not a party to this Agreement may bring a cause of action pursuant to this Agreement as a third-party beneficiary. This Agreement may not be interpreted to waive the sovereign immunity of any party to this Agreement to the extent such party may have immunity under the law of the State of Texas.

V.

CATHOLIC CHARITIES agrees to provide **COUNTY** all records relating to **HEB Transit** upon written request of **COUNTY** and to provide a final report detailing the manner in which such funds are expended and the program details of its services.

VI.

CATHOLIC CHARITIES must submit to **TARRANT COUNTY** a final report as to the program outcomes achieved within sixty (60) days of the end of the requested funding year by providing the following:

(a) A program update on all outcomes accomplished and client populations served; and,
(b) An accounting of all expenditures of County funds for providing demand-response transportation services to access employment supportive services, such as employment, job interviews, training, education, and childcare, for the residents and service areas of Bedford, Euless, and Hurst.

Until receipt of this final report by Tarrant County, all possible subsequent funding will be held in abeyance.

VII.

CATHOLIC CHARITIES acknowledges in accordance with Chapter 2252 of the Texas Government Code, that it is not a company identified on the Texas Comptroller's list of companies known to have contracts with or supply services to a foreign organization designated as Foreign Terrorist Organization by the U.S. Secretary of State. The term "foreign terrorist organization" means an organization designated as a foreign terrorist organization by the United States Secretary of State as authorized by 8 U.S.C. §1189.

CATHOLIC CHARITIES acknowledges and agrees that it has fully, accurately, and completely disclosed all interested parties in Form 1295, and has acknowledged the completeness of this disclosure by filing the Form 1295, certified to as shown in **Attachment A**, with the Texas Ethics Commission as required by law.

VIII.

COMPLIANCE WITH LAWS. In providing the services required by this Agreement, **CATHOLIC CHARITIES** must observe and comply with all applicable federal, state, and local statutes, ordinances, rules, and regulations, including, without limitation, workers' compensation laws, minimum and maximum salary and wage statutes and regulations, and non-discrimination laws and regulations. Vendor shall be responsible for ensuring its compliance with any laws and regulations applicable to its business, including maintaining any necessary licenses and permits.

IX.

This Agreement may be executed in one or more counterparts, each of which will be deemed to be an original copy of this agreement, and all of which, when taken together, shall be deemed to constitute one and the same Agreement. The exchange of copies of this Agreement and of signature pages by electronic transmission shall constitute effective execution and delivery of this agreement as to the parties and may be used in lieu of the original agreement for all purposes. Signatures of the parties

Document ID: 2076430da796fd562d32edcd40144032b65dfa048c571bfe3d14022a4d50bdcc

transmitted or executed electronically shall be deemed to be their original signatures for any purposes whatsoever.

WITNESS OUR HANDS this 10 of November, 2025.

CATHOLIC CHARITIES, DIOCESE OF FORT WORTH, INC.

BY: _____
OFFICER AND AUTHORIZED AGENT
CATHOLIC CHARITIES/HEB TRANSIT
ADDRESS: 249 W Thornhill Dr Fort Worth, TX 76115

WITNESS OUR HANDS this ___of _____, 2025.

TARRANT COUNTY, TEXAS

BY: _____
TIM O'HARE, COUNTY JUDGE

BY: _____
MATT KRAUSE, COMMISSIONER PRECINCT 3

CERTIFICATION AS TO AVAILABILITY OF FUNDS:
(in the amount of $8,000.00)

BY: _____
KIMBERLY M. BUCHANAN, COUNTY AUDITOR

Document ID: 2076430da796fd562d32edcd40144032b65dfa048c571bfe3d14022a4d50bdcc

APPROVED AS TO FORM*

BY: _____
CRIMINAL DISTRICT ATTORNEY'S OFFICE

*By law, the Criminal District Attorney's Office may only advise or approve contracts for its clients. We reviewed this document as to form from our client's legal perspective. Other parties may not rely on this approval. Instead, those parties should seek contract review from independent counsel.

Document ID: 2076430da796fd562d32edcd40144032b65dfa048c571bfe3d14022a4d50bdcc

Signature Certificate

Envelope Ref:f33672b65d6800b18b1b7efb2ddae09ce7ac26c2

Author:	Brenda Lopez	Creation Date:	06 Nov 2025, 12:58:42, CST	Completion Date:	10 Nov 2025, 09:23:15, CST

Document Details:



Name:	HEB Transit Agreement FY2026_Matthew Jacobs
Type:	
Document Ref:	2076430da796fd562d32edcd40144032b65dfa048c571bfe3d14022a4d50bdcc
Document Total Pages:	5

Document Signed By:

Name:	Joshua Audi
Email:	jaudi@ccdofw.org
IP:	2a09:bac5:c2a0:2632::3ce:2b
Location:	GARLAND, TX (US)
Date:	10 Nov 2025, 09:23:15, CST
Consent:	eSignature Consent Accepted
Security Level:	Email



Document History:

Envelope Created	Brenda Lopez created this envelope on 06 Nov 2025, 12:58:42, CST
Invitation Sent	Invitation sent to Joshua Audi on 06 Nov 2025, 13:14:11, CST
Invitation Accepted	Invitation accepted by Joshua Audi on 06 Nov 2025, 13:14:20, CST
Signed by Joshua Audi	Joshua Audi signed this Envelope on 10 Nov 2025, 09:23:15, CST
Executed	Document(s) successfully executed on 10 Nov 2025, 09:23:15, CST
Signed Document(s)	Link emailed to jaudi@ccdofw.org
Signed Document(s)	Link emailed to blopez@txor.us
Signed Document(s)	Link emailed to netadmin@ccdofw.org

CERTIFICATE OF INTERESTED PARTIES

FORM 1295

Complete Nos. 1 - 4 and 6 if there are interested parties.
Complete Nos. 1, 2, 3, 5, and 6 if there are no interested parties.

OFFICE USE ONLY
CERTIFICATION OF FILING

Certificate Number:
2025-1373601

Date Filed:
10/07/2025

Date Acknowledged:

1 Name of business entity filing form, and the city, state and country of the business entity's place of business.
Catholic Charities, Diocese of Fort Worth, Inc.
Fort Worth, TX United States

2 Name of governmental entity or state agency that is a party to the contract for which the form is being filed.
HEB Transit

3 Provide the identification number used by the governmental entity or state agency to track or identify the contract, and provide a description of the services, goods, or other property to be provided under the contract.
N/A
Co-grant funds to comm court; transportation services

4 Name of Interested Party	City, State, Country (place of business)	Nature of interest (check applicable)	
		Controlling	Intermediary
Kwasny, Elizabeth	Fort Worth, TX United States	X	
Audit, Joshua	Fort Worth, TX United States	X	

5 Check only if there is NO Interested Party. ☐

6 UNSWORN DECLARATION

My name is Joshua Audi, and my date of birth is 02/04/1982.

My address is 4012 Falcon Lake Dr., Fort Worth (city), TX (state), 76016 (zip code), USA (country).

I declare under penalty of perjury that the foregoing is true and correct.

Executed in Tarrant County, State of Texas, on the 7th day of October (month), 2025 (year).

Signature of authorized agent of contracting business entity
(Declarant)

AGREEMENT

THE STATE OF TEXAS §
§ **KNOW ALL MEN BY THESE PRESENTS**
COUNTY OF TARRANT §

THIS AGREEMENT, made and entered into by and between **NORTH EAST TRANSPORTATION SERVICE ("NETS"),** an urban transit district ("UTD") established as a political subdivision under the laws of the state of Texas, acting herein by and through its duly authorized agent and officer, and **TARRANT COUNTY, TEXAS ("COUNTY").**

FINDINGS

WHEREAS, it is extremely difficult for senior citizens and those who are disabled to obtain public transportation for medical appointments and treatment in the northeast sector of Tarrant County;

WHEREAS, a need exists to provide transportation services to this segment of our population to facilitate their access to medical care;

WHEREAS, **NETS** is a UTD established under Chapter 458 of the Texas Transportation Code, and provides transportation services for medical appointments, socialization, employment, essential shopping, and education purposes to any resident of a participating city who is disabled or is 65 years of age or older (collectively referred to as "Transportation Services");

WHEREAS, **NETS** has experienced an increase in ridership of 15% or more each year, and they predict another increase in 2025;

WHEREAS, the Tarrant County Commissioners Court finds that an important segment of our society benefits from the Transportation Services provided by **NETS;** and

WHEREAS, **NETS** acknowledges that it is a "governmental entity" and not a "business entity" as those terms are defined in Tex. Gov't. Code Sect. 2252.908, and therefore, no disclosure of interested parties pursuant to Tex. Gov't. Code Sect. 2252.908 is required.

Therefore, in order to provide and continue to provide Transportation Services, **COUNTY** and **NETS** agree to the following terms:

I.

NETS will provide to qualifying residents in Bedford, Euless, Grapevine, Haltom City, Hurst, Keller, and North Richland Hills the Transportation Services described above and will seek to provide additional services and obtain additional sources of funding for Transportation Services.

II.

COUNTY will pay to **NETS** a lump sum payment of **$8,000.00** to supplement increased service costs. **NETS** must expend these funds for this limited purpose within 12 months of execution of this Agreement. **NETS** will reimburse **COUNTY** for any funds not expended for these Services within this time period.

III.

NETS AGREES TO INDEMNIFY AND HOLD HARMLESS COUNTY, ITS OFFICIALS, AGENTS, SERVANTS, OR EMPLOYEES AGAINST ANY AND ALL NEGLIGENCE, LIABILITY, LOSS, COSTS, CLAIMS, ATTORNEY FEES OR EXPENSES ARISING OUT OF THE WRONGFUL AND NEGLIGENCT ACT(S) OF COMMISSION OR OMISSION OF CALL A RIDE SOUTHLAKE, ITS AGENTS, EMPLOYEES, INTERNS, SUBCONTRACTORS OR VOLUNTEERS ARISING FROM THE ACTIVITIES UNDER THIS AGREEMENT.

IV.

Nothing contained in this Agreement shall be deemed or construed by the parties hereto, nor by any third party, as creating the relationship of principal and agent, partnership, joint enterprise, common enterprise, joint venture, joint owners, or joint tenants between the parties. The parties hereby declare and acknowledge that the relationship existing is one of independent contractor. This Agreement does not and shall not be construed to entitle either party or any of their respective employees or officials, if applicable, to any benefit, privilege, or other amenities of employment from the other party.

V.

The parties to this Agreement do not intend to create any third-party beneficiaries of the Agreement of the rights contained herein. No person who is not a party to this Agreement may bring a cause of action pursuant to this Agreement as a third-party beneficiary. This Agreement may not be interpreted to waive the sovereign immunity of any party to this Agreement to the extent such party may have immunity under the law of the State of Texas.

VI.

NETS agrees to provide **COUNTY** all records relating to these programs performed by **NETS** upon written request of **COUNTY** and to provide a final report detailing the manner in which such funds are expended and the program details of its services.

VII.

NETS must submit to **TARRANT COUNTY** a final report as to the program outcomes achieved within sixty (60) days of the end of the requested funding year by providing the following:

(a) a program update on all outcomes accomplished and client populations served; and,

(b) an accounting of all expenditures of County funds used to supplement increased service costs.

Until receipt of this final report by Tarrant County, all possible subsequent funding will be held in abeyance.

VIII.

COMPLIANCE WITH LAWS. In providing the services required by this Agreement, **NORTH EAST TRANSPORTATION SERVICE** must observe and comply with all applicable federal, state, and local statutes, ordinances, rules, and regulations, including, without limitation, workers' compensation laws, minimum and maximum salary and wage statutes and regulations, and non-discrimination laws and regulations. Vendor shall be responsible for ensuring its compliance with any laws and regulations applicable to its business, including maintaining any necessary licenses and permits.

IX.

This Agreement may be executed in one or more counterparts, each of which will be deemed to be an original copy of this agreement, and all of which, when taken together, shall be deemed to constitute one and the same Agreement. The exchange of copies of this Agreement and of signature pages by electronic transmission shall constitute effective execution and delivery of this agreement as to the parties and may be used in lieu of the original agreement for all purposes. Signatures of the parties transmitted or executed electronically shall be deemed to be their original signatures for any purposes whatsoever.

WITNESS OUR HANDS this _____ day of _____, 2025.

NORTH EAST TRANSPORTATION SERVICE

BY: _____
OFFICER AND AUTHORIZED AGENT
ADDRESS: 4301 City Point Dr.
North Richland Hills, TX 76180

WITNESS OUR HANDS this 18th day of November, 2025.

TARRANT COUNTY, TEXAS

BY: _____
TIM O'HARE, COUNTY JUDGE

BY: _____
MATT KRAUSE, COMMISSIONER PRECINCT 3

CERTIFICATION AS TO AVAILABILITY OF FUNDS:
(in the amount of $8,000.00)

BY: _____
KIMBERLY M. BUCHANAN, COUNTY AUDITOR

APPROVED AS TO FORM*

BY: _____
CRIMINAL DISTRICT ATTORNEY'S OFFICE

*By law, the Criminal District Attorney's Office may only advise or approve contracts for its clients. We reviewed this document as to form from our client's legal perspective. Other parties may not rely on this approval. Instead, those parties should seek contract review from independent counsel.

TARRANT COUNTY
COMMISSIONERS COURT COMMUNICATION

Court Date: December 9, 2025	**Court Order #:**	**Page:** 1 of 2
Department: Commissioner, Precinct 4	**Prepared By:** Emily Randolph	**Approved By:** Tracey Knight

SUBJECT:

Consideration of a Request to Hold the 2026 Tarrant County Junior Livestock Show at the Will Rogers Memorial Center and Finding of a Direct Public Purpose

***** CONSENT AGENDA *****

COMMISSIONERS COURT ACTION REQUESTED

It is requested that the Commissioners Court approve a request to hold the Tarrant County Junior Livestock Show at Will Rogers Memorial Center and find the event serves a direct public purpose.

BACKGROUND

On November 11, 2025, the Commissioners Court, through Court Order #146207, approved the renewal of an Interlocal Agreement with the City of Fort Worth to facilitate the cooperation between City and County concerning the usage of Will Rogers Memorial Center and the Fort Worth Convention Center for County-related events that serve to benefit the public and are of interest to the community. This agreement allows the County to use the facilities and associated parking for events, without payment, in an amount not to exceed $100,000.00 and not more than ten (10) events per year. As part of the agreement, the event being held must be of interest to the community and approved by the Tarrant County Commissioners Court.

The Tarrant County Junior Livestock Show would like to host their event at the Will Rogers Memorial Center from February 16-22, 2026. In order to satisfy the Facilities Use Agreement with the City of Fort Worth, Court approval is required to utilize a portion of the $100,000.00 credit towards this event. The Tarrant County Junior Livestock Show has an executed Facility License Agreement in place with the City of Fort Worth.

The Criminal District Attorney's Office has reviewed this request.

FISCAL IMPACT

County funds will not be expended on this event. Tarrant County is allocated up to $100,000.00 per fiscal year to utilize space within Will Rogers Memorial Center or Fort Worth Convention Center, subject to space availability. The estimated cost to hold this event at Will Rogers Memorial Center is $19,500.00. $80,500.00 will remain allocated for use of the facilities.

Attachments

2026 Tarrant County Junior Livestock Show License Amendment.pdf Executed.pdf

PUBLIC EVENTS DEPARTMENT / WILL ROGERS MEMORIAL CENTER
3401 WEST LANCASTER AVENUE, FORT WORTH, TEXAS 76107

FIRST AMENDMENT TO LICENSE AGREEMENT #21058
A LICENSE AGREEMENT WITH TARRANT COUNTY JUNIOR LIVESTOCK SHOW

This **FIRST AMENDMENT TO LICENSE AGREEMENT NO. 21058** ("Amendment") is made and entered into by and between the City of Fort Worth ("City"), a home-rule municipal corporation, acting herein through its duly authorized representative, and **Tarrant County Junior Livestock Show** ("Licensee"), acting herein by and through its duly authorized representative.

WHEREAS, on June 25, 2025 City and Licensee entered into License Agreement ("Agreement") No. 21058 for the purpose holding the Tarrant County Junior Livestock Show at certain facilities in the Will Rogers Memorial Center;

WHEREAS, Licensee wishes to modify its schedule and available facilities;

NOW, THEREFORE, City and Licensee for and in good and valuable consideration of the mutual covenants and agreements contained herein, do mutually covenant and agree that the Agreement is hereby amended as follows:

I.
AMENDMENTS

1.

"FACILITIES", is hereby amended and shall read as follows:

Day	Date	Room	Time	Usage	License Fee
Monday	02/16/2026	Sheep Barn	8:00 AM - 11:59 PM	Set Up	0.00
Monday	02/16/2026	Small Exhibits Bldg	8:00 AM - 11:59 PM	Set Up	0.00
Monday	02/16/2026	Swine Barn	8:00 AM - 11:59 PM	Set Up	0.00
Monday	02/16/2026	West Show Arena	8:00 AM - 11:59 PM	Set Up	0.00
Tuesday	02/17/2026	West Show Arena	8:00 AM - 11:59 PM	Move In	250.00
Tuesday	02/17/2026	Swine Barn	8:00 AM - 11:59 PM	Move In	625.00
Tuesday	02/17/2026	Tower Promenade	8:00 AM - 11:59 PM	Move In	300.00
Tuesday	02/17/2026	Small Exhibits Bldg	8:00 AM - 11:59 PM	Move In	500.00
Tuesday	02/17/2026	Sheep Barn	8:00 AM - 11:59 PM	Move In	625.00
Wednesday	02/18/2026	Sheep Barn	8:00 AM - 11:59 PM	Event	1250.00
Wednesday	02/18/2026	Small Exhibits Bldg	8:00 AM - 11:59 PM	Event	1,000.00
Wednesday	02/18/2026	Swine Barn	8:00 AM - 11:59 PM	Event	1250.00
Wednesday	02/18/2026	West Show Arena	8:00 AM - 11:59 PM	Event	500.00
Wednesday	02/18/2026	Tower Promenade	8:00 AM - 11:59 PM	Event	300.00
Thursday	02/19/2026	West Show Arena	8:00 AM - 11:59 PM	Event	500.00
Thursday	02/19/2026	Swine Barn	8:00 AM - 11:59 PM	Event	1250.00
Thursday	02/19/2026	Tower Promenade	8:00 AM - 11:59 PM	Event	300.00
Thursday	02/19/2026	Small Exhibits Bldg	8:00 AM - 11:59 PM	Event	1,000.00
Thursday	02/19/2026	Sheep Barn	8:00 AM - 11:59 PM	Event	1250.00
Friday	02/20/2026	Sheep Barn	8:00 AM - 11:59 PM	Event	1250.00
Friday	02/20/2026	Small Exhibits Bldg	8:00 AM - 11:59 PM	Event	1,000.00
Friday	02/20/2026	Tower Promenade	8:00 AM - 11:59 PM	Event	300.00
Friday	02/20/2026	Swine Barn	8:00 AM - 11:59 PM	Event	1250.00
Friday	02/20/2026	West Show Arena	8:00 AM - 11:59 PM	Event	500.00
Saturday	02/21/2026	West Show Arena	8:00 AM - 11:59 PM	Event	500.00
Saturday	02/21/2026	Swine Barn	8:00 AM - 11:59 PM	Event	1250.00
Saturday	02/21/2026	Tower Promenade	8:00 AM - 11:59 PM	Event	300.00
Saturday	02/21/2026	Small Exhibits Bldg	8:00 AM - 11:59 PM	Event	1,000.00
Saturday	02/21/2026	Sheep Barn	8:00 AM - 11:59 PM	Event	1250.00
				Total:	**19,500.00**

2.

The "TERM" of said License shall now be for a period beginning no earlier than 7:00 a.m., **02/16/26** and ending at 11:59 p.m. on **02/22/26**.

IN WITNESS WHEREOF, the parties hereto have executed this First Amendment on this 29 day of August, 2025.

City of Fort Worth, Texas	**Tarrant County Junior Livestock Show**
Allison McNamara	RL Feldt (Aug 29, 2025 11:10:39 CDT)
Allison McNamara*	R.L. Feldt
Interim Assistant Facilities & Public Events Director	President

* Allison McNamara has been delegated the proper authority to execute this document on behalf of the City pursuant to an Interoffice Memorandum from the City Manager dated August 19, 2019.

CITY OF FORT WORTH USE ONLY
Contract Compliance Manager:
By signing I acknowledge that I am the person responsible for the monitoring and administration of this contract, including ensuring all performance and reporting requirements.

Allison McNamara
Allison McNamara
Interim Assistant Facilities & Public Events Director

TARRANT COUNTY
COMMISSIONERS COURT COMMUNICATION

Court Date: December 9, 2025	**Court Order #:**	**Page:** 1 of 3
Department: Transportation	**Prepared By:** Sarah VanTassel	**Approved By:** Joseph Jackson

SUBJECT:

Public Hearing - To Consider Authorizing a Stop Sign on Mustang Wells Drive at the Intersection with Ben Day Murrin Road - Precinct 2

***** CONSENT AGENDA *****

COMMISSIONERS COURT ACTION REQUESTED

It is requested that the Commissioners Court consider authorizing a stop sign on Mustang Wells Drive at the intersection with Ben Day Murrin Road, Precinct 2.

BACKGROUND

Transportation Services received a citizen request regarding the need for a stop sign on Mustang Wells Drive at the intersection with Ben Day Murrin Road.

Following a site visit, the County Engineer determined that a stop sign installation is warranted and recommends that Precinct 2 staff proceed with the installation for public safety, pending public hearing approval.

Mustang Wells Drive is established as County Road 1287-010.

On November 11, 2025, the Commissioners Court, through Court Order #146313, approved publication of a notice of public hearing on December 16, 2025, to consider authorizing a stop sign on Mustang Wells Drive at the intersection with Ben Day Murrin Road.

The December Commissioners Court meeting date was rescheduled from December 16, 2025 to December 9, 2025. The notice was published reflecting the rescheduled court date in compliance with Texas Transportation Code Section 251.152.

FISCAL IMPACT

The fiscal impact to Tarrant County will be $81.76 per sign for a total of $81.76. Funding is available in account 26100-2026 Road and Bridge Fund / 6210300000 Precinct 2 Maintenance / 558041 Road Signs.

Attachments

SignExhibit-MustangWells_Stop-8.5x11.EXH.01-P.pdf

Takings Impact Assessment_MustangWells_Stop.pdf

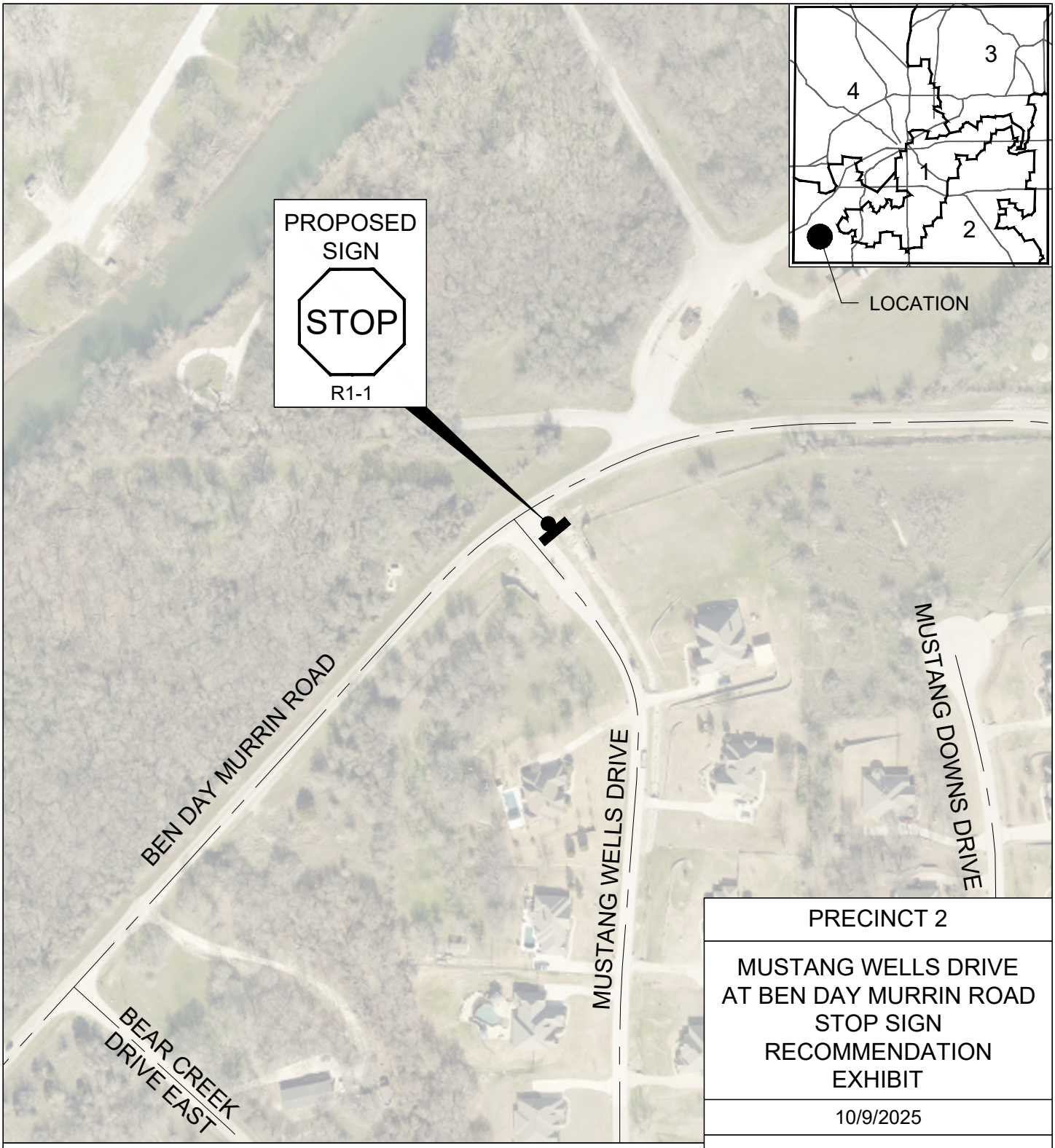

PRECINCT 2

MUSTANG WELLS DRIVE
AT BEN DAY MURRIN ROAD
STOP SIGN
RECOMMENDATION
EXHIBIT

10/9/2025

TARRANT COUNTY DEPARTMENT
OF TRANSPORTATION SERVICES

200 Taylor St., Suite 305
Fort Worth, Texas 76196

Phone (817) 884-1250
Fax (817) 884-1178

N

0 100 200 300 400

GRAPHIC SCALE IN FEET

T:\Projects\Engineering\Signage\Signage\Mustang Wells\@ Ben Day Murrin Stop Sign\SignExhibit-MustangWells_Stop.dwg

TAKINGS IMPACT ASSESSMENT CHECKLIST

Complete this form for any County action that involves the adoption Of a regulation, policy, guideline, court resolution or order.

Project/Regulation Name: **Authorizing a Stop Sign on Mustang Wells Drive at Ben Day Murrin Road – Precinct 2**

County Department: **Transportation Services**

Contact Person: **Joseph Jackson, County Engineer**

Phone Number of Contact Person: **817 884-1153**

Type of TIA Performed: **SHORT TIA** or FULL TIA.
Circle one after answering the questions in Sections II and III below.

I. Stated Purpose

Attach to this checklist an explanation of the purpose of the regulation, policy, guideline, court resolution or order.

Note: The remainder of this Takings Impact Assessment Checklist should be completed in consultation with the Criminal District Attorney's Office.

II. Potential Effect on Private Real Property

1. Does the county action require a physical invasion, occupation or dedication of real property?

YES _____ NO _____X_____

2. Does the county action limit or restrict a real property right, even partially or temporarily?

YES _____ NO ____X_____

If you answered "yes" to either question, go to Section III.
If you answered "no" to both, STOP HERE and circle SHORT TIA at the top of the form.

TARRANT COUNTY
COMMISSIONERS COURT COMMUNICATION

Court Date: December 9, 2025	**Court Order #:**	**Page:** 1 of 3
Department: Transportation	**Prepared By:** Sarah VanTassel	**Approved By:** Joseph Jackson

SUBJECT:

Public Hearing - To Consider Establishing a Speed Limit of 35 MPH on Eagle Mountain Circle - Precinct 4

***** CONSENT AGENDA *****

COMMISSIONERS COURT ACTION REQUESTED

It is requested that the Commissioners Court conduct a public hearing to consider establishing a speed limit of 35 MPH on Eagle Mountain Circle, Precinct 4.

BACKGROUND

At the request of Precinct 4 operations staff, a site visit and speed study were conducted to evaluate the need to establish a posted speed limit for Eagle Mountain Circle. Based on the study, the County Engineer recommends a maximum speed of 35 MPH be posted on both Eagle Mountain for its full extents. Eagle Mountain Circle is established as County Road 4207-010.

On November 11, 2025, the Commissioners Court, through Court Order #146314, approved publication of a notice of public hearing on December 16, 2025, to consider establishing a speed limit of 35 MPH on Eagle Mountain Circle.

The December Commissioners Court meeting date was rescheduled from December 16, 2025 to December 9, 2025. The notice was published reflecting the rescheduled court date in compliance with Texas Transportation Code Section 251.152.

FISCAL IMPACT

The fiscal impact to Tarrant County will be $62.47 per sign for a total of $62.47. Funding is available in account 26100-2026 Road and Bridge Fund / 6410300000 Precinct 4 Maintenance / 558041 Road Signs.

Attachments

SignExhibit-EagleMtnCir_Speed-8.5x11.EXH.01-P.pdf

Takings Impact Assessmet Checklist_EagleMtnCirSpeed.pdf

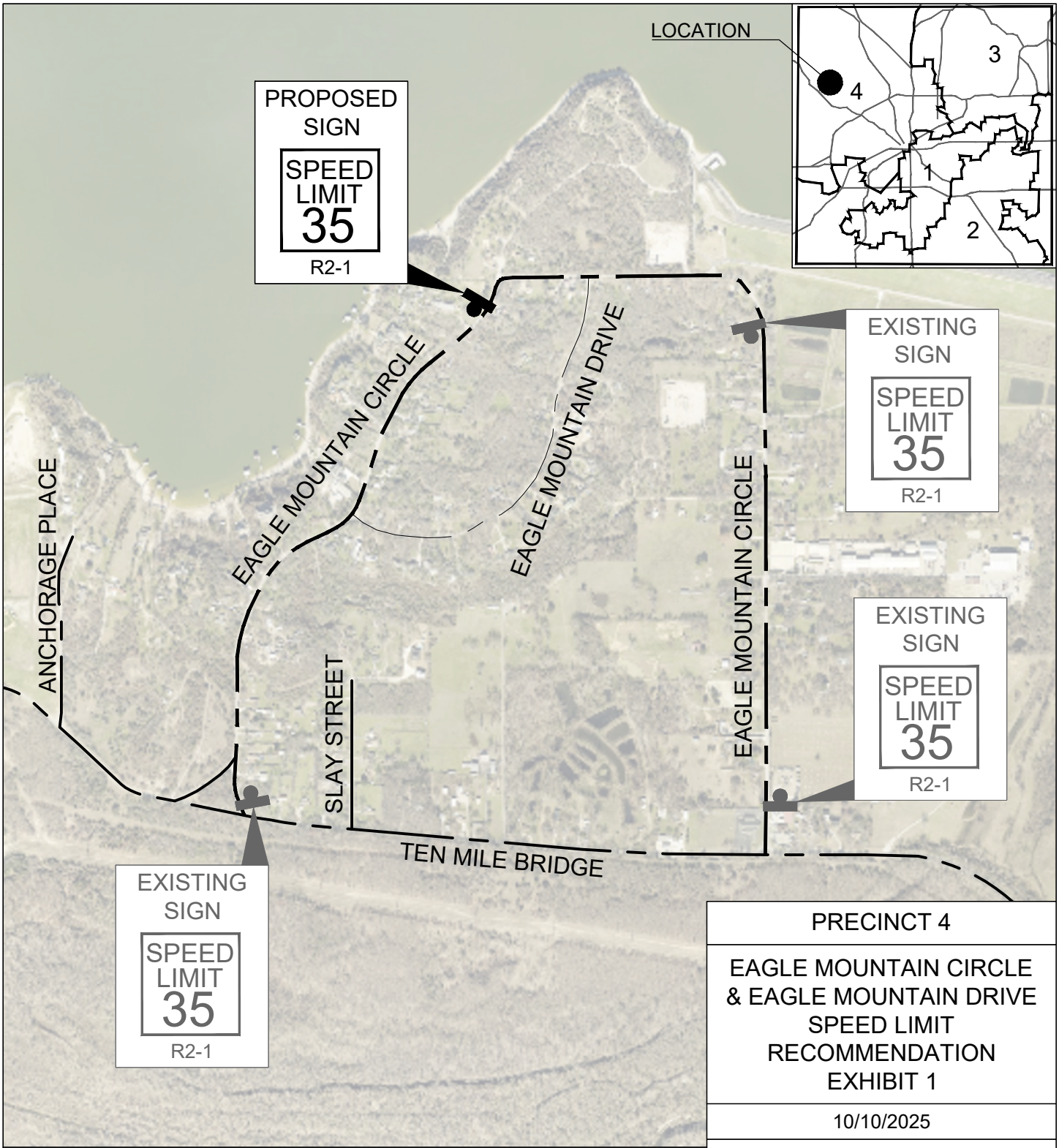

PRECINCT 4

EAGLE MOUNTAIN CIRCLE & EAGLE MOUNTAIN DRIVE SPEED LIMIT RECOMMENDATION EXHIBIT 1

10/10/2025

TARRANT COUNTY DEPARTMENT OF TRANSPORTATION SERVICES

200 Taylor St., Suite 305
Fort Worth, Texas 76196

Phone (817) 884-1250
Fax (817) 884-1178

N

0 500 1000 1500 2000

GRAPHIC SCALE IN FEET

T:\Projects\Engineering\Signage\Signage\Eagle Mountain Circle\Speed Limit\SignExhibit-EagleMtnCir_Speed.dwg

TAKINGS IMPACT ASSESSMENT CHECKLIST

Complete this form for any County action that involves the adoption Of a regulation, policy, guideline, court resolution or order.

Project/Regulation Name: **Establishing a speed limit of 35 MPH on Eagle Mountain Circle.**

County Department: **Transportation Services**

Contact Person: **Joseph Jackson, County Engineer**

Phone Number of Contact Person: **817 884-1153**

Type of TIA Performed: **SHORT TIA** or FULL TIA.
Circle one after answering the questions in Sections II and III below.

I. Stated Purpose

Attach to this checklist an explanation of the purpose of the regulation, policy, guideline, court resolution or order.

Note: The remainder of this Takings Impact Assessment Checklist should be completed in consultation with the Criminal District Attorney's Office.

II. Potential Effect on Private Real Property

1. Does the county action require a physical invasion, occupation or dedication of real property?

YES _____ NO _____X_____

2. Does the county action limit or restrict a real property right, even partially or temporarily?

YES _____ NO ____X_____

If you answered "yes" to either question, go to Section III.
If you answered "no" to both, STOP HERE and circle SHORT TIA at the top of the form.

TARRANT COUNTY
COMMISSIONERS COURT COMMUNICATION

Court Date: December 9, 2025	**Court Order #:**	**Page:** 1 of 7
Department: Administrator	**Prepared By:** Aaron Taliaferro, Intergovernmental Relations Director	**Approved By:** Chandler Merritt, County Administrator

SUBJECT:

Consideration of a Resolution to Nominate an Individual to the Tarrant Appraisal District Board of Advisors

COMMISSIONERS COURT ACTION REQUESTED

It is requested that the Commissioners Court consider a resolution nominating an individual for the Tarrant Appraisal District (TAD) Board of Directors (BOD) to a vacant seat that expires Dec 31, 2027.

BACKGROUND

On November 10, 2025, TAD informed all Tarrant County entities of the resignation of Mr. Alan Blaylock from the TAD BOD. Mr. Blaylock is an appointed member of the board whose term ends 12/31/2027. According to the Texas Property Tax Code, section 6.0301(f), a taxing unit entitled to vote under section 6.03 may nominate a candidate to fill the vacancy of an appointed member.

6.0301(f) "If a vacancy occurs in an appointive position on the board of directors, each taxing unit that is entitled to vote under Section 6.03 may nominate by resolution adopted by its governing body a candidate to fill the vacancy. The taxing unit shall submit the name of its nominee to the chief appraiser within 45 days after notification from the board of directors of the existence of the vacancy, and the chief appraiser shall prepare and deliver to the board of directors within the next five days a list of the nominees. The board of directors shall appoint by majority vote of its members one of the nominees to fill the vacancy."

TAD will accept nominations until Dec 26, 2025, at 11:59PM. The Chief Appriaser will prepare a list of nominees and the Board shall appoint by majority vote one of the nominees to fill the vacancy.

The criteria of eligibility to serve as a member of the TAD BOD is provided as an attachment to this court communication.

FISCAL IMPACT

There is no fiscal impact related to this action.

Attachments

Resolution_Nomination to TAD Bd of Dir_Dec 9 2026.pdf
tad-vacancy-letter_Alan Blaylock.pdf
tad-vacancy-letter_invitation to nominate.pdf
2026 TAD Letter_Nomination and Appointment of Board of Directors including eligibility criteria (1).pdf

TARRANT COUNTY
Commissioners Court

RESOLUTION
BOARD OF DIRECTORS NOMINATION TO THE TARRANT APPRAISAL DISTRICT

WHEREAS, Tarrant Appraisal District notified entities on November 10, 2025, of a vacancy on their Board of Directors; and

WHEREAS, the the Texas Property Tax Code Section 6.0301(f) states "If a vacancy occurs in an appointive position on the board of directors, each taxing unit that is entitled to vote under Section 6.03 may nominate by resolution adopted by its governing body a candidate to fill the vacancy. The taxing unit shall submit the name of its nominee to the chief appraiser within 45 days after notification from the board of directors of the existence of the vacancy, and the chief appraiser shall prepare and deliver to the board of directors within the next five days a list of the nominees. The board of directors shall appoint by majority vote of its members one of the nominees to fill the vacancy."; and

WHEREAS, we believe the nominee meets the criteria according to section 6.03 of the Texas Property Tax Code;

NOW, THEREFORE, BE IT RESOLVED, that the Tarrant County Commissioners Court nominates:

_____

for the vacant term that ends 12/31/2027.

IN WITNESS WHEREOF, we have hereunto set our hands and caused the seal of Tarrant County to be affixed this the 9th day of December 2025.

_____
Tim O'Hare
County Judge

_____
Roderick Miles Jr.
County Commissioner, Precinct 1

_____
Matt Krause
County Commissioner, Precinct 3

_____
Alisa Simmons
County Commissioner, Precinct 2

_____
Manny Ramirez
County Commissioner, Precinct 4

Letter from TAD to Tarrant County Entities sent November 10, 2025

Dear Entity Representatives:

Today, the Tarrant Board of Directors received the resignation letter of Alan Blaylock, effective immediately.

"Due to recent changes in the demands on my time, I am no longer able to give this position the full attention it deserves. It has been a privilege to serve the taxpayers and taxing entities of Tarrant County in this capacity. I am grateful for the opportunity to contribute to the Board's efforts to ensure fairness, transparency, and integrity in the appraisal process."

Alan Blaylock

We thank Mr. Blaylock for serving the taxpayers of Tarrant County and for the time and dedication he gave to the board during his tenure.

Mr. Blaylock is an appointed member of the TAD Board of Directors whose term ends 12/31/27. According to Texas Property Tax Code, a vacancy at TAD by an appointed member falls under Section 6.0301(f):

(f) "If a vacancy occurs in an appointive position on the board of directors, each taxing unit that is entitled to vote under Section **6.03** may nominate by resolution adopted by its governing body a candidate to fill the vacancy. The taxing unit shall submit the name of its nominee to the chief appraiser within 45 days after notification from the board of directors of the existence of the vacancy, and the chief appraiser shall prepare and deliver to the board of directors within the next five days a list of the nominees. The board of directors shall appoint by majority vote of its members one of the nominees to fill the vacancy."

This email serves as your notification of vacancy and notice of eligibility to nominate one person to fill the vacancy.

If your governing body chooses to pass a nominating resolution to fill this vacancy, the deadline will fall on December 25th but as TAD is closed, Section 1.06 determines:

"If the last day for the performance of an act is a Saturday, Sunday, or legal state or national holiday, the act is timely if performed on the next regular business day."

Therefore TAD will accept nominations until December 26th at 11:59pm. The Chief Appraiser will prepare a list of nominees and the Board shall appoint by majority vote one of the nominees to fill the vacancy.

This process is separate from the already in process, regular board appointment in which two member's terms end on 12/31/25.
From Tarrant Appraisal District

Letter from TAD to Tarrant County Entities sent November 10, 2025

Dear Entity Representatives:

Today, the Tarrant Board of Directors received the resignation letter of Alan Blaylock, effective immediately.

"Due to recent changes in the demands on my time, I am no longer able to give this position the full attention it deserves. It has been a privilege to serve the taxpayers and taxing entities of Tarrant County in this capacity. I am grateful for the opportunity to contribute to the Board's efforts to ensure fairness, transparency, and integrity in the appraisal process."

Alan Blaylock

We thank Mr. Blaylock for serving the taxpayers of Tarrant County and for the time and dedication he gave to the board during his tenure.

Mr. Blaylock is an appointed member of the TAD Board of Directors whose term ends 12/31/27. According to Texas Property Tax Code, a vacancy at TAD by an appointed member falls under Section 6.0301(f):

(f) "If a vacancy occurs in an appointive position on the board of directors, each taxing unit that is entitled to vote under Section **6.03** may nominate by resolution adopted by its governing body a candidate to fill the vacancy. The taxing unit shall submit the name of its nominee to the chief appraiser within 45 days after notification from the board of directors of the existence of the vacancy, and the chief appraiser shall prepare and deliver to the board of directors within the next five days a list of the nominees. The board of directors shall appoint by majority vote of its members one of the nominees to fill the vacancy."

This email serves as your notification of vacancy and notice of eligibility to nominate one person to fill the vacancy.

If your governing body chooses to pass a nominating resolution to fill this vacancy, the deadline will fall on December 25th but as TAD is closed, Section 1.06 determines:

"If the last day for the performance of an act is a Saturday, Sunday, or legal state or national holiday, the act is timely if performed on the next regular business day."

Therefore TAD will accept nominations until December 26th at 11:59pm. The Chief Appraiser will prepare a list of nominees and the Board shall appoint by majority vote one of the nominees to fill the vacancy.

This process is separate from the already in process, regular board appointment in which two member's terms end on 12/31/25.
From Tarrant Appraisal District

Joe Don Bobbitt
Executive Director
Chief Appraiser

September 2, 2025

Presiding Officer
Entity in Tarrant County

RE: Nomination and Appointment to TAD Board of Directors

Dear Presiding Officer:

The current terms of two appointed members of the Tarrant Appraisal District Board of Directors will expire on December 31, 2025. As required by Section 6.03 of the Property Tax Code, the first step in appointing voting members for the term beginning January 1, 2026, is calculating the number of votes to which the participating taxing units are entitled (see enclosure).

This year, the Conservation/Reclamation districts are participating according to Section 6.03(c) of the Property Tax Code which states, "Conservation and reclamation districts are not entitled to vote unless at least one conservation and reclamation district in the district delivers to the chief appraiser a written request to nominate and vote on the board of directors by June 1 of each odd-numbered year."

We received written request from the Tarrant Regional Water District on May 23rd, 2025. The other eligible districts in Tarrant County are Far North Fort Worth MUD, Karis MMD, Live Oak Creek MUD, Trophy Club MUD and Viridian MMD. These nominations are under an earlier timeline, and one nomination has been made. These entities participate in the voting process on the regular timeline.

The **next step** is nomination of other candidates. Taxing units are not required to submit any nominations but, if they choose to do so, the **nominations may be made only by a resolution adopted by the governing body and the presiding officer of the governing body must submit the names of the nominees to TAD *BEFORE* October 15, 2025, which means the nominations must be received by our office no later than October 14, 2025.**

To be eligible to serve as a voting member of the Board of Directors, an individual must have resided in Tarrant County for at least two years immediately preceding January 1, 2026. An individual who is otherwise eligible is not ineligible because he or she is a member of the government body of a taxing unit. Texas law restricts eligibility and conduct of members of governmental bodies such as appraisal districts' board of directors. In consultation with your attorneys, please review the Property Tax Code and other applicable laws carefully for the details of those restrictions, including definitions of "substantial interest", "business entity", "deferred", "abated", and other terms used below and for the potential criminal consequences of violating certain restrictions. In summary, the Property Tax Code provides that the following are ineligible to serve as voting members of the Board of Directors:

- An individual who has been an employee of the Tarrant Appraisal District at any time during the preceding three years;

- An individual who has served as a voting member of the Board of Directors for all or part of five terms since January 1, 2022
- An individual who is an employee of a taxing unit that participates in Tarrant Appraisal District unless the individual is also a member of the governing body or an elected official of a taxing unit that participates in the District;
- An individual who, directly or through a business entity in which he or she has a substantial interest, is a party to a contract with Tarrant Appraisal District or a taxing unit that participates in the District, if the contract relates to the performance of any activity governed by the Property Tax Code;
- An individual who has engaged in the business of appraising property for compensation for use in proceedings under the Property Tax Code at any time during the preceding three years;
- An individual who has engaged in the business of representing property owners for compensation in proceedings under the Property Tax Code in Tarrant County at any time during the preceding three years;
- An individual who is related by blood or marriage to an individual who is engaged in the business of appraising property for compensation for use in proceedings under the Property Tax Code or of representing property owners for compensation in proceedings under the Property Tax Code in Tarrant County, if the relationship is within the 1st or 2nd degrees on the following chart;

Degrees of Consanguinity and Affinity

1st DEGREE	2nd DEGREE	3rd DEGREE
By Consanguinity • Parents • Children **By Affinity** • Spouses of relatives listed under first degree consanguinity • Spouse • Spouse's parents • Spouse's children • Stepparents • Stepchildren	**By Consanguinity** • Grandparents • Grandchildren • Brothers & sisters **By Affinity** • Spouses of relatives listed by second degree consanguinity • Spouse's grandparents • Spouse's grandchildren • Spouse's brothers & sisters	**By Consanguinity** • Great grandparents • Great grandchildren • Nieces & nephews • Aunts & uncles **By Affinity** • No prohibitions

- an individual who owns property on which delinquent taxes have been owed to a taxing unit for more than 60 days after the date the individual knew or should have known of the delinquency unless the delinquent taxes, penalty, and interest are being paid under an installment plan or a suit to collect the delinquent taxes is deferred or abated.

Letter to Taxing Units
Appointments to Board of Directors
September 2, 2025

When submitting nominations to jwooddell@tad.org, please include the full name of each candidate, his or her complete residence address, and a current biography. From timely submitted nominations, the ballot will be distributed before October 30th to each taxing unit entitled to participate in the appointment process, which may be summarized as follows:

before October 01, 2025	Chief Appraiser calculates numbers of votes and notifies taxing units
before October 15, 2025	Governing bodies of taxing units nominate candidates by resolution and send names to Chief Appraiser
before October 30, 2025	Chief Appraiser prepares ballot and sends it to taxing units
before December 15, 2025 for most taxing units but see the different requirements in section 6.03(k-1) that applies only to "each taxing unit entitled to cast at least five percent of the total votes", which in this appointment cycle means 100 or more votes on the enclosed list	Governing bodies of taxing units determine their votes by resolution and send votes to Chief Appraiser
before December 31, 2025	Chief Appraiser counts votes, determines which 2 candidates received the most votes, and submits results to taxing units
January 01, 2026	new term begins

Copies of the Nomination Letter, the Ballot Letter, and the Results Letter and enclosures will be posted at www.tad.org/Board-Appointment-Process for your convenience. Entity nominations, nominee biographies, and entity votes will be uploaded as submitted. Please bookmark this communication tool in lieu of PIA requests. If you have any questions, please call 817.284.0024.

Sincerely,

Joe Don Bobbitt
Executive Director/Chief Appraiser

JDB:jw
Enclosure: Voting Allotment

TARRANT COUNTY
COMMISSIONERS COURT COMMUNICATION

Court Date: December 9, 2025	**Court Order #:**	**Page:** 1 of 1
Department: Administrator	**Prepared By:** Kendal Rash	**Approved By:** Vanessa Perez

SUBJECT:

Consideration of Out-of-State Travel Requests

COMMISSIONERS COURT ACTION REQUESTED

It is requested that the Commissioners Court consider the following out-of-state travel requests.

BACKGROUND

A. District Attorney
1 attendee; 3 days/2 nights; California; $315.00

The attendee is requesting reimbursement for a travel that occurred in October. The California DA's Association Cold Case Symposium paid for attendance, lodging, and air transportation, but the attendee incurred other travel fees and expenses.

B. Precinct 1
4 attendees; 6 days/5 nights; Nevada; $10,948.00

Attendance at the conference allows precinct personnel to evaluate current innovations in roadway construction, maintenance equipment, and safety practices, supporting informed purchasing decisions and more efficient, cost-effective operations.

C. Precinct 1
2 attendees; 5 days/4 nights; Washington, D.C.; $5,128.00

This conference is a national policy and advocacy event where county officials meet with federal leaders to address issues affecting county operations. Attendance ensures our county stays informed on federal legislation, secures access to emerging funding opportunities, and advocates for local priorities that directly impact county services and budgets.

D. Precinct 2
2 attendees; 5 days/4 nights; Washington, D.C.; $5,128.00

This conference is a national policy and advocacy event where county officials meet with federal leaders to address issues affecting county operations. Attendance ensures our county stays informed on federal legislation, secures access to emerging funding opportunities, and advocates for local priorities that directly impact county services and budgets.

E. Precinct 4
2 attendees; 5 days/4 nights; Nevada; $4,432.00

Attendance at the conference allows precinct personnel to evaluate current innovations in roadway construction, maintenance equipment, and safety practices, supporting informed purchasing decisions and more efficient, cost-effective operations.

F. Precinct 4

3 attendees; 5 days/4 nights; Washington, D.C.; $7,032.00

This conference is a national policy and advocacy event where county officials meet with federal leaders to address issues affecting county operations. Attendance ensures our county stays informed on federal legislation, secures access to emerging funding opportunities, and advocates for local priorities that directly impact county services and budgets.

FISCAL IMPACT

A. District Attorney	588261/D8700-2026/4510100000 = $315.00
B. Precinct 1	588261/26100-2026/6110300000 = $10,948.00
C. Precinct 1	588261/10000-2026/6110100000 = $5,128.00
D. Precinct 2	588261/10000-2026/6210100000 = $5,128.00
E. Precinct 4	588261/26100-2026/6410300000 = $4,432.00
F. Precinct 4	588291/10000-2026/6410100000 = $7,032.00

Attachments

Requests and Per Diems.pdf

TARRANT COUNTY TRAVEL REQUEST

DEPARTMENT	NAME (If applicable, list additional names)
Criminal District Attorney	Kim D'Avignon

CONFERENCE NAME (Acronyms should not be used. Please provide the full name of the conference/seminar.)

CDAA Cold Case Symposium

Destination: San Diego CA	Departure: 10/27/25	Return: 10/29/25

GSA RATE (Additional line provided if travel occurs over a two-month period.)

GSA Lodging Rate	Date Range for GSA Lodging Rate
	-
	-

RATIONALE (Describe how the trip benefits Tarrant County and provide a rationale if lodging cost is over the GSA rate.)

Kim D'Avignon, a trial specialist for the District Attorney's Office, was asked to present at the California District Attorney's Association Cold Case Symposium for her work and prosecution of the case involving the kidnapping and murder of 17 year-old Carla Walker in 1974. The association coordinated and funded her flight and hotel expenses, but she has incurred airport parking fees and per diem expenses that we are requesting approval to reimburse to her in the amount of $315, using our department forfeiture funds.

TRAVEL EXPENDITURES

Category:	Attendee(s) Name(s):	Cost Per Night, Per Attendee:	# of Days:	Date Range:	Total Lodging Cost Per Attendee:
Lodging				-	
				-	
				-	
				-	
				-	
Total Cost for Lodging for the Trip					

Category:	Additional Details (ex: if the cost per attendee differs.)	Total Cost:
Registration:	Conference Speaker $0.00	$ 0.00
Transportation:	CDAA Funded Air Fair $0.00/Airport Parking $100.00	$ 100.00
Other (specify):	Per Diem $215.00	$ 215.00
TOTAL FOR ALL TRAVEL EXPENDITURES		$ 315.00

ACCOUNT CODING (Please include all Account Coding and the respective amount coming from each account.)

588261/D8700-2026/4510100000

Requested By: _____ Department Head/Elected Official: _____

RV 02/21/2024

Your search for San Diego, California (San Diego including San Diego)

Estimated per diem total: $613 (Max lodging total + M&IE total)

Lodging breakdown: October 27, 2025 - October 29, 2025

Date	Daily Rate	# of Nights	Total
October	$199	2	$398

Max lodging total: **$398**

Meals & incidental expenses breakdown: October 27, 2025 - October 29, 2025

Days, Month	Daily Rate	# of Days	Total
First day (10/27/25)*	$64.50	1	$64.50
Full day (Oct)	$86	1	$86
Last day (10/29/25)*	$64.50	1	$64.50

*The first and last calendar dates of M&IE are calculated at 75%.

M&IE total: **$215**

TARRANT COUNTY TRAVEL REQUEST

DEPARTMENT	NAME (If applicable, list additional names)
Precinct 1 R&B	Richard Hatcher, Misael Linan, Gary Williams, Nick Sifert

CONFERENCE NAME (Acronyms should not be used. Please provide the full name of the conference/seminar.)

CONEXPO-CON/AGG

Destination: Las Vegas, NV	Departure: 3/2/26	Return: 3/7/26

GSA RATE (Additional line provided if travel occurs over a two-month period.)

GSA Lodging Rate	Date Range for GSA Lodging Rate
$ 159.00	3/2/26 - 3/7/26
	-

RATIONALE (Describe how the trip benefits Tarrant County and provide a rationale if lodging cost is over the GSA rate.)

During this conference, participants will engage with new equipment and technology in the road and bridge construction industry. Along with over 100 educational sessions which include keynote speakers and panel discussions with industry leaders in the field.

TRAVEL EXPENDITURES

Category:	Attendee(s) Name(s):	Cost Per Night, Per Attendee:	# of Days:	Date Range:	Total Lodging Cost Per Attendee:
Lodging	Misael Linan	$ 141.00	5	3/2/26 - 3/7/26	$ 705.00
	Richard Hatcher	$ 141.00	5	3/2/26 - 3/7/26	$ 705.00
	Gary Williams	$ 141.00	5	3/2/26 - 3/7/26	$ 705.00
	Nick Sifert	$ 141.00	5	3/2/26 - 3/7/26	$ 705.00
				-	
Total Cost for Lodging for the Trip					$ 2,820.00

Category:	Additional Details (ex: if the cost per attendee differs.)	Total Cost:
Registration:	719.00	$ 2,876.00
Transportation:	Flight	$ 3,360.00
Other (specify):	Per Diem	$ 1,892.00
TOTAL FOR ALL TRAVEL EXPENDITURES		$ 10,948.00

ACCOUNT CODING (Please include all Account Coding and the respective amount coming from each account.)

588261/26100-2026/6110300000

Requested By: RH Department Head/Elected Official: Joe Trammel

RV 02/21/2024

Your search for Las Vegas, Nevada (Clark including Las Vegas)

Estimated per diem total: $1268 (Max lodging total + M&IE total)

Lodging breakdown: March 02, 2026 - March 07, 2026

Date	Daily Rate	# of Nights	Total
March	$159	5	$795

Max lodging total: **$795**

Meals & incidental expenses breakdown: March 02, 2026 - March 07, 2026

Days, Month	Daily Rate	# of Days	Total
First day (03/02/26)*	$64.50	1	$64.50
Full day (Mar)	$86	4	$344
Last day (03/07/26)*	$64.50	1	$64.50

*The first and last calendar dates of M&IE are calculated at 75%.

M&IE total: **$473**

TARRANT COUNTY TRAVEL REQUEST

DEPARTMENT	NAME (If applicable, list additional names)
Commissioner, Precinct 1	Roderick Miles Jr., Jamal Williams

CONFERENCE NAME (Acronyms should not be used. Please provide the full name of the conference/seminar.)

National Association of Counties 2026 Legislative Conference

Destination:	Departure:	Return:
Washington, DC	2/21/26	2/25/26

GSA RATE (Additional line provided if travel occurs over a two-month period.)

GSA Lodging Rate	Date Range for GSA Lodging Rate
$ 196.00	2/21/26 - 2/25/26
	-

RATIONALE (Describe how the trip benefits Tarrant County and provide a rationale if lodging cost is over the GSA rate.)

The NACo Legislative Conference brings together nearly 2,00 elected and appointed county officials to focus on the federal policy issues that impact counties and our residents . Attendees have the opportunity to engage in second to none policy sessions, interact with officials and meet members of congress.

Staff will lodge at the host hotel and will cut the cost of additional transportation

TRAVEL EXPENDITURES

Category:	Attendee(s) Name(s):	Cost Per Night, Per Attendee:	# of Days:	Date Range:	Total Lodging Cost Per Attendee:
Lodging	Roderick Miles Jr.	$ 275.00	4	2/21/26 - 2/25/26	$ 1,100.00
	Jamal Williams	$ 275.00	4	2/21/26 - 2/25/26	$ 1,100.00
				-	
				-	
				-	
Total Cost for Lodging for the Trip					$ 2,200.00

Category:	Additional Details (ex: if the cost per attendee differs.)	Total Cost:
Registration:		$ 1,100.00
Transportation:	AirFare	$ 1,000.00
Other (specify):	Per Diem	$ 828.00
TOTAL FOR ALL TRAVEL EXPENDITURES		$ 5,128.00

ACCOUNT CODING (Please include all Account Coding and the respective amount coming from each account.)

10000-2026/588261/6110100000

Requested By: _____ Department Head/Elected Official: _____

Your search for District of Columbia (Washington DC (also the cities of Alexandria, Falls Church and Fairfax, and the counties of Arlington and Fairfax, in Virginia; and the counties of Montgomery and Prince George's in Maryland) including District of Columbia)

Estimated per diem total: $1198 (Max lodging total + M&IE total)

Lodging breakdown: February 21, 2026 - February 25, 2026

Date	Daily Rate	# of Nights	Total
February	$196	4	$784

Max lodging total: **$784**

Meals & incidental expenses breakdown: February 21, 2026 - February 25, 2026

Days, Month	Daily Rate	# of Days	Total
First day (02/21/26)*	$69	1	$69
Full day (Feb)	$92	3	$276
Last day (02/25/26)*	$69	1	$69

*The first and last calendar dates of M&IE are calculated at 75%.

M&IE total: **$414**

TARRANT COUNTY TRAVEL REQUEST

DEPARTMENT	NAME (If applicable, list additional names)
Commissioner Pct 2	Alisa Simmons, Albert Roberts

CONFERENCE NAME (Acronyms should not be used. Please provide the full name of the conference/seminar.)

National Associations of Counties 2026 Legislative Conference

Destination: Washington, DC	Departure: 2/20/26	Return: 2/24/26

GSA RATE (Additional line provided if travel occurs over a two-month period.)

GSA Lodging Rate	Date Range for GSA Lodging Rate
$ 196.00	2/20/26 - 2/24/26
	-

RATIONALE (Describe how the trip benefits Tarrant County and provide a rationale if lodging cost is over the GSA rate.)

The NACo Legislative Conference brings together nearly 2,000 elected and appointed county officials to focus on federal policy issues that matter most to county governments.

Staff will stay at one of the host hotels, where they will not need a rental car, pay for parking or uber to/from the conference daily.

TRAVEL EXPENDITURES

Category:	Attendee(s) Name(s):	Cost Per Night, Per Attendee:	# of Days:	Date Range:	Total Lodging Cost Per Attendee:
Lodging	Alisa Simmons	$ 275.00	4	2/20/26 - 2/24/26	$ 1,100.00
	Albert Roberts	$ 275.00	4	2/20/26 - 2/24/26	$ 1,100.00
				-	
				-	
				-	
Total Cost for Lodging for the Trip					$ 2,200.00

Category:	Additional Details (ex: if the cost per attendee differs.)	Total Cost:
Registration:	$550 per person	$ 1,100.00
Transportation:	$ 500 per person	$ 1,000.00
Other (specify):	Per Diem $414 per person	$ 828.00
TOTAL FOR ALL TRAVEL EXPENDITURES		$5,128.00

ACCOUNT CODING (Please include all Account Coding and the respective amount coming from each account.)

10000-2026/6210100000/588261

Requested By: _____ Department Head/Elected Official: _____

Your search for District of Columbia (Washington DC (also the cities of Alexandria, Falls Church and Fairfax, and the counties of Arlington and Fairfax, in Virginia; and the counties of Montgomery and Prince George's in Maryland) including District of Columbia)

Estimated per diem total: $1198 (Max lodging total + M&IE total)

Lodging breakdown: February 20, 2026 - February 24, 2026

Date	Daily Rate	# of Nights	Total
February	$196	4	$784

Max lodging total: **$784**

Meals & incidental expenses breakdown: February 20, 2026 - February 24, 2026

Days, Month	Daily Rate	# of Days	Total
First day (02/20/26)*	$69	1	$69
Full day (Feb)	$92	3	$276
Last day (02/24/26)*	$69	1	$69

*The first and last calendar dates of M&IE are calculated at 75%.

M&IE total: **$414**

TARRANT COUNTY TRAVEL REQUEST

DEPARTMENT	NAME (If applicable, list additional names)
Precinct 4 Road & Bridge	Jerry Deweese, Randall Plate

CONFERENCE NAME (Acronyms should not be used. Please provide the full name of the conference/seminar.)

CONEXPO-CON/AGG

Destination: Las Vegas, NV	Departure: 3/2/26	Return: 3/6/26

GSA RATE (Additional line provided if travel occurs over a two-month period.)

GSA Lodging Rate	Date Range for GSA Lodging Rate
$ 159.00	3/2/26 - 3/6/26
	-

RATIONALE (Describe how the trip benefits Tarrant County and provide a rationale if lodging cost is over the GSA rate.)

During this conference, participants will engage with new equipment and technology in the road and bridge construction industry. To get the most from the event, participants will:
1. Attend hands-on demonstrations of the latest equipment and technology.
2. Participate in educational sessions, including keynotes and panel discussions.
3. Network with industry leaders and peers.
4. Take notes on emerging trends and best practices shared during sessions.
5. Follow up with contacts and apply insights to ongoing projects.

Over 100 educational sessions, with keynote speakers and panel discussions, will offer valuable opportunities to learn from industry leaders. Hotel rate was the best responsible option in close proximity to the conference location.

TRAVEL EXPENDITURES

Category:	Attendee(s) Name(s):	Cost Per Night, Per Attendee:	# of Days:	Date Range:	Total Lodging Cost Per Attendee:
Lodging	Jerry Deweese	$ 159.00	4	3/2/26 - 3/6/26	$ 636.00
	Randall Plate	$ 159.00	4	3/2/26 - 3/6/26	$ 636.00
				-	
				-	
				-	
Total Cost for Lodging for the Trip					1,272.00

Category:	Additional Details (ex: if the cost per attendee differs.)	Total Cost:
Registration:		$ 1,438.00
Transportation:		$ 1,120.00
Other (specify):	Per Diem	$ 602.00
TOTAL FOR ALL TRAVEL EXPENDITURES		$ 4,432.00

ACCOUNT CODING (Please include all Account Coding and the respective amount coming from each account.)

588261/26100-2026/6410300000

Requested By: D'Renda Cummings Department Head/Elected Official:

RV 02/21/2024

Your search for Las Vegas, Nevada (Clark including Las Vegas)

Estimated per diem total: $1023 (Max lodging total + M&IE total)

Lodging breakdown: March 02, 2026 - March 06, 2026

Date	Daily Rate	# of Nights	Total
March	$159	4	$636

Max lodging total: **$636**

Meals & incidental expenses breakdown: March 02, 2026 - March 06, 2026

Days, Month	Daily Rate	# of Days	Total
First day (03/02/26)*	$64.50	1	$64.50
Full day (Mar)	$86	3	$258
Last day (03/06/26)*	$64.50	1	$64.50

*The first and last calendar dates of M&IE are calculated at 75%.

M&IE total: **$387**

TARRANT COUNTY TRAVEL REQUEST

DEPARTMENT	NAME (If applicable, list additional names)
Commissioner Pct 4	Commissioner Manny Ramirez, Tracey Knight, Dillon Maroney

CONFERENCE NAME (Acronyms should not be used. Please provide the full name of the conference/seminar.)

2026 NACo Legislative Conference

Destination: Washington D.C.	Departure: 2/20/26	Return: 2/24/26

GSA RATE (Additional line provided if travel occurs over a two-month period.)

GSA Lodging Rate	Date Range for GSA Lodging Rate
$ 196.00	2/20/26 - 2/24/26
	-

RATIONALE (Describe how the trip benefits Tarrant County and provide a rationale if lodging cost is over the GSA rate.)

This conference will allow the attendees to network with local, state, and federal officials and participate in congressional briefings and meetings. The attendees will learn about federal policy issues that impact counties and our constituents and join policy and educational sessions.

TRAVEL EXPENDITURES

Category:	Attendee(s) Name(s):	Cost Per Night, Per Attendee:	# of Days:	Date Range:	Total Lodging Cost Per Attendee:
Lodging	Manny Ramirez	$ 196.00	4	2/20/26 - 2/24/26	$ 784.00
	Tracey Knight	$ 196.00	4	2/20/26 - 2/24/26	$ 784.00
	Dillon Maroney	$ 196.00	4	2/20/26 - 2/24/26	$ 784.00
				-	
				-	
Total Cost for Lodging for the Trip					$ 2,352.00

Category:	Additional Details (ex: if the cost per attendee differs.)	Total Cost:
Registration:	$600 ea	$ 1,800.00
Transportation:	$546 ea	$ 1,638.00
Other (specify):	Per Diem: $414 ea	$ 1,242.00
TOTAL FOR ALL TRAVEL EXPENDITURES		$ 7,032.00

ACCOUNT CODING (Please include all Account Coding and the respective amount coming from each account.)

10000-2026/6410100000/588291

Requested By: _____ Department Head/Elected Official: _____

RV 02/21/2024

Your search for District of Columbia (Washington DC (also the cities of Alexandria, Falls Church and Fairfax, and the counties of Arlington and Fairfax, in Virginia; and the counties of Montgomery and Prince George's in Maryland) including District of Columbia)

Estimated per diem total: $1198 (Max lodging total + M&IE total)

Lodging breakdown: February 20, 2026 - February 24, 2026

Date	Daily Rate	# of Nights	Total
February	$196	4	$784

Max lodging total: **$784**

Meals & incidental expenses breakdown: February 20, 2026 - February 24, 2026

Days, Month	Daily Rate	# of Days	Total
First day (02/20/26)*	$69	1	$69
Full day (Feb)	$92	3	$276
Last day (02/24/26)*	$69	1	$69

*The first and last calendar dates of M&IE are calculated at 75%.

M&IE total: **$414**

TARRANT COUNTY
COMMISSIONERS COURT COMMUNICATION

Court Date: December 9, 2025	**Court Order #:**	**Page:** 1 of 1
Department: Administrator	**Prepared By:** Kendal Rash	**Approved By:** Vanessa Perez

SUBJECT:

Consideration of an Exception to the Travel Policy

COMMISSIONERS COURT ACTION REQUESTED

It is requested that the Commissioners Court approve an exception to the County's Travel Policy for the Sheriff's Office.

BACKGROUND

Sheriff's Office
1 attendee; 6 days/5 nights; Greenville, TX; $1,420.50

This course will introduce attendees to advanced concepts of physical security and problem solving for law enforcement, including target hardening and crime prevention. A hotel is being requested for local travel due to the event being more than a two (2) hour drive each way.

FISCAL IMPACT

Sheriff's Office 588261/10000-2026/2110510000 = $1,420.50

Attachments

TARRANT COUNTY
COMMISSIONERS COURT COMMUNICATION

Court Date: December 9, 2025	**Court Order #:**	**Page:** 1 of 1
Department: Administrator	**Prepared By:** Lani Taylor	**Approved By:** Daphne Walker

SUBJECT:

Consideration of Initial Guaranteed Maximum Price Amendment No. 2 between Tarrant County Hospital District, d/b/a JPS Health Network and J.E. Dunn Construction for Services Related to the Central Utility Plant Project

COMMISSIONERS COURT ACTION REQUESTED

It is requested that the Commissioners Court consider the Initial Guaranteed Maximum Price Amendment No. 2 between Tarrant County Hospital District, d/b/a JPS Health Network (TCHD) and JE Dunn Construction for services related to the Central Utility Plant Project.

BACKGROUND

On September 16, 2025, the Commissioners Court, through Court Order #146002, approved Amendment No. 1 to the Initial Guaranteed Maximum Price (IGMP) for services related to the Central Utility Plant Project as part of the JPS Master Facilities Plan.

Amendment No. 2 will include additional services such as hoisting, concrete, precast, plumbing, mechanical and electrical. This amendment involves construction in an amount exceeding $500,000.00 which requires Commissioners Court approval.

TCHD's Board of Managers approved the attached IGMP Amendment at its November 13, 2025 Board of Managers meeting. TCHD Counsel reviewed the Amendment and approved it as to form.

FISCAL IMPACT

Funding in the amount of $119,351,594.00 is available in TCHD's approved Master Facilities Plan budget.

Attachments

IGMP AMENDMENT 2 - JE DUNN FOR CUP.pdf

INITIAL GUARANTEED MAXIMUM PRICE AMENDMENT # 2 –
MEP SYSTEMS/ PRECAST/ UTILITIES/ CONCRETE FOUNDATIONS AND SUPERSTRUCTURE

This **INITIAL GUARANTEED MAXIMUM PRICE AMENDMENT #2** ("Amendment") is executed on the [_____] day of [___ _], 2025 (the "Effective Date") between **TARRANT COUNTY HOSPITAL DISTRICT D/B/A JPS HEALTH NETWORK** ("Owner") and **J.E. DUNN-SOURCE**, a joint venture ("Construction Manager") pursuant to that certain Standard Form of Agreement Between Owner and Construction Manager, AIA Document A133-2019 dated **February 12, 2025** (the "Agreement"), for the construction of the **CENTRAL UTILITY PLANT** project to be located at 1500 S. Main Street in Fort Worth, Texas 76104 (the "Project"). Pursuant to Section 3.2.1 of the Agreement, this Amendment is intended to establish the Initial Guaranteed Maximum Price for the MEP Systems/Precast/Utilities/Concrete Foundations and Superstructure Phase of the Project.

WHEREAS, the Agreement provides that the parties will establish an Initial Guaranteed Maximum Price ("IGMP") for each Phase of the Project through an IGMP Amendment; and

WHEREAS, Owner and Construction Manager now desire to amend the Agreement for the purpose of establishing the IGMP for the MEP Systems/Precast/Utilities/Concrete Foundations and Superstructure Phase of the Project, and all supporting exhibits related thereto.

NOW THEREFORE, in consideration of the covenants and conditions contained herein, and other good and valuable consideration, Owner and Construction Manager hereby agree to amend the Agreement as follows:

1. All capitalized, undefined terms shall have the meaning set forth in the Agreement.

2. The IGMP for the MEP Systems/Precast/Utilities/Concrete Foundations and Superstructure Phase of the Project shall be **One Hundred Nineteen Million Three Hundred Fifty-One Thousand Five Hundred Ninety-Four and No/00 Dollars ($119,351,594.00)**. The IGMP Breakdown is set forth in **Attachment 1** hereto.

3. The list of Accepted Alternates, if any, included in the IGMP is set forth in **Attachment 2** hereto.

4. The list of Unit Prices, if any, included in the IGMP is set forth in **Attachment 3** hereto.

5. The list of Construction Manager's assumptions, clarifications, and qualifications for the IGMP is set forth in **Attachment 4** hereto.

6. Construction Manager's General Conditions Costs Breakdown for the IGMP is set forth in **Attachment 5** hereto. Construction Manager's stipulated Personnel Rates is set forth in **Attachment 5.1** hereto.

7. Allowances included in the IGMP are set forth in **Attachment 6** hereto.

8. Construction Manager's updated Project Schedule is set forth in **Attachment 7** hereto.

9. Construction Manager's List of Key Personnel is set forth in **Attachment 8** hereto.

10. The list of Drawings and Specifications on which the IGMP is based is set forth in **Attachment 9** hereto.

11. Construction Manager-Owned Equipment Rental Rates are set forth in **Attachment 10** hereto.

12. If applicable, Construction Manager's Quality Control Plan is set forth in **Attachment 11** hereto.

13. The Construction Manager's Site Logistics are set forth in **Attachment 12** hereto.

14. Entire Amendment: This Amendment supersedes all prior negotiations, representations or agreements, either written or oral, related to the IGMP for the MEP Systems/Precast/Utilities/Concrete Foundations and Superstructure Phase and/or determination of such IGMP value as of the date hereof between the parties.

15. Except as specifically modified by this Amendment, all terms of the Agreement remain in full force and effect.

This Amendment is entered into as of the day and year first written above.

Owner:	**Construction Manager:**
TARRANT COUNTY HOSPITAL DISTRICT D/B/A JPS HEALTH NETWORK	**J.E. DUNN-SOURCE,** a joint venture
_____	_____
By:_____	**By:** _____
Its: _____	**Its:**_____

Attachment 1 – IGMP Breakdown

JPS Health Central Plant
Fort Worth, TEXAS
September 24, 2025

* All iGMPs are consolidated into a single guarantee and do not establish separate or line-item guarantees. Each iGMP will continue to be rolled forward as part of the combined total until the final GMP (fGMP) is accepted.

Item	Description	Unit	Quantity	Unit Price	Cost
01 00 00	General Conditions	LS	1	9259735	9,259,735
01 10 00	General Requirements	LS	1	1,271,089	1,271,089
01 54 00	Hoisting	LS	1	307,242	307,242
03 32 00	Concrete Structure	LS	1	14,986,170	14,986,170
03 45 00	Precast	LS	1	5,813,488	5,813,488
23 00 00	Plumbing & Mechanical Less iGMP #1 Major Equipment & Design Assist Fee	LS	1	56,532,469	56,532,469
26 00 00	Electrical Less iGMP #1 Major Equipment and Design Assist Fee	LS	1	10,437,344	10,437,344
	Subtotal				98,607,537
	Building Permit	0.00%			0
	Bonds and Insurance	3.42%			4,081,825
	Builders Risk	0.70%			835,461
	Construction Contingency	4.00%			4,140,993
	Escalation	3.00%			3,229,974
	Design Contingency	5.00%			5,544,790
	Fee	2.50%			2,911,014
	Total				119,351,594

JPS Health Cetral Utility Plant
IGMP AMENDMENT - ATTACHMENT 1.1
SCHEDULE OF VALUES

				FOR REFERENCE ONLY	
Item	Description	Unit	iGMP 2	iGMP 1	iGMP Totals
01 00 00	General Conditions	LS	$ 9,259,735	$ 1,993,882	$ 11,253,617
01 00 00	General Requirements	LS	$ 1,271,089	$ 262,850	$ 1,533,939
01 54 00	Hoisting	LS	$ 307,242		
02 40 00	Demolition Phase 1	LS		$ 240,662	$ 240,662
02 40 00	Demolition Phase 2	LS		$ 1,171,430	$ 1,171,430
02 40 00	Demolition Phase Make Safe	LS		$ 50,000	$ 50,000
02 40 00	Abatement	LS		$ 95,700	$ 95,700
03 32 00	Concrete Structure	LS	$ 14,986,170		
03 45 00	Precast		$ 5,813,488		
31 20 00	Preliminary Excavation / Site Prep	LS		$ 1,364,000	$ 1,364,000
31 20 00	Soil Remediation Contingency	LS		$ 503,731	$ 503,731
32 90 00	Tree Trimming for Oncor	LS		$ 135,000	$ 135,000
33 00 00	Existing Utility Investigation	LS		$ 500,000	$ 500,000
33 00 00	Utility Relocation Contingency	LS		$ 829,778	$ 829,778
14 00 00	Elevator Equipment	LS		$ 800,000	$ 800,000
14 00 00	Elevator Temporary Services	LS		$ 160,000	$ 160,000
22 00 00	Temp Water Services	LS		$ 20,000	$ 20,000
23 00 00	Mechanical and Plumbing	LS	$ 56,532,469	$ 33,889,093	$ 90,421,562
23 00 00	Equipment Upsizing Contingency	LS		$ 2,788,383	$ 2,788,383
23 00 00	Mechanical Design Assist	LS		$ 250,000	$ 250,000
26 00 00	Temporary Site Electric	LS		$ 45,000	$ 45,000
26 00 00	Electrical	LS	$ 10,437,344	$ 54,565,629	$ 65,002,973
26 00 00	Dual Electrical Feed Equipment Contingency	LS		$ 2,887,500	$ 2,887,500
26 00 00	Electrical Design Assist	LS		$ 315,000	$ 315,000
	Subtotal		**$ 98,607,537**	**$ 102,867,638**	**$ 180,368,275**
	Building Permit	0.00%	$-	$-	$-
	Bonds and Insurance	3.42%	$4,081,825	$4,345,060	$8,426,885
	Builders Risk Insurance	0.70%	$835,461	$889,340	$1,724,801
	Construction Contingency	4.00%	$4,140,993	$4,324,082	$8,465,075
	Escalation	3.00%	$3,229,974	$5,621,306	$8,851,280
	Design Contingency	0.00%	$5,544,790	$5,902,371	$11,447,161
	Fee	2.50%	$2,911,014	$3,098,745	$6,009,759
	Total		**$ 119,351,594**	**$ 127,048,542**	**$ 225,293,236**

* All iGMPs are consolidated into a single guarantee and do not establish separate or line-item guarantees. Each iGMP will continue to be rolled forward as part of the combined total until the final GMP (fGMP) is accepted.

Attachment 2 – Accepted Alternates

(Not Used)

Attachment 3 – Unit Prices

(Not Used)

Attachment 4 – Assumptions, Clarifications, and Qualifications

JPS Central Utility Plant
ASSUMPTIONS, CLARIFICATIONS & QUALIFICATIONS

General:

1. This iGMP provides for a partial project scope related to Hoisting, Concrete, Precast, Plumbing, Mechanical and Electrical.
2. This iGMP is limited to covering General Conditions costs commencing February 1, 2026, and General Conditions ending February 28, 2027, as well as the scope defined herein, including General Conditions and the Schedule.
3. This iGMP's scope of the work is based on the attached schedule.
4. This iGMP is based Jacob's Basis of Design Narrative dated 7/30/2025 (122 pages), JQ Structural Basis of Design Drawings dated 7/29/2025 (6 sheets) and Technology Program Narrative sent to JE Dunn on 7/31/25 (6 pages).
5. Construction start is subject to approval of all applicable permits from all authorities having jurisdiction so that construction can commence and proceed without interruption. JE Dunn has assumed JPS will apply for all applicable permits.
6. This iGMP includes a 4% Construction Contingency and 5% Design Contingency.
7. This iGMP includes an escalation contingency of 3%.
8. We have included Builder's Risk insurance at 0.70% of total cost.
9. We have included our combined insurance and bond rate of 3.42% of total cost.
10. The project site is assumed to be free of any above ground or below ground hazardous materials and/or hazardous conditions, as well as any environmental and/or endangered species, flora, fauna, or wetlands requiring mitigation.
11. Our iGMP does not include any sales taxes on incorporated materials. JPS to provide Texas Sales and Use Tax Exemption Certificate.
12. This iGMP is based on the Owner providing clear access to the site during construction operations.
13. Our iGMP includes a construction office trailer set up at JPS's overflow lot at the corner of Magnolia and Crawford. We have assumed water to be available within 100 ft. We have assumed JPS to provide ONCOR transformer drop next to the trailers. We have included the temporary electrical raceways and conductors to the trailers.
14. All iGMPs are consolidated into a single guarantee and do not establish separate or line-item guarantees. Each iGMP will continue to be rolled forward as part of the combined total until the final GMP (fGMP) is accepted.

Scope Specific Clarifications:

Structure

1. We have not included any bridging of piers to avoid in place structures that may occur due to existing foundations
2. We have assumed Structure to be pan slab option as described in the narrative.
3. We have assumed a mudslab at the base of the crawlspace.

Architecture

1. We have included insulated grey precast at 100% of the enclosure or 71,355 SF and the following within or on top of this precast per discussions with Jacobs and preliminary elevations provided after the BOD Program document.

ASSUMPTIONS, CLARIFICATIONS & QUALIFICATIONS
September 26, 2025

a. We have included an additional two-color premium for 13,125 SF of that precast.
b. We have included 17,056 SF of metal panels on top of precast on the east side of the building.
c. We have included screening at the exhaust piping on the north side of the building.
d. We have included 3,588 SF of architectural louvers.
e. We have included 1,355 SF of stone on top of precast.
f. We have included 1,553 SF of stucco on top of precast.
g. We have included 6,760 SF of punched windows.
h. We have included 1,502 SF of curtain wall.

2. The two color precast indicated above is assumed to be with readily available materials to create colors.

Plumbing & HVAC

1. We excluded medical alarm interlock wiring from the CUP to the new Hospital; this is assumed to be by the hospital project.
2. We have included the above ground fuel tanks as described in the BOD narrative.
3. We have included mechanical systems from the CUP to the Hospital ending at the connection point of the CUP to the Hospital, approximate column line K. Further coordination between the CUP and the Hospital project teams will be needed to understand the full scope delineation.
4. We have included the locker room as described in the room data sheets but assume this does not have a shower associated with it.
5. We have included the 3 CRAC units for the Data and Communications Room. The CRAH system as described in the HVAC Narrative, Section 3.3.3.4 Building Mechanical and Plumbing also noted for this space is excluded.

Electrical

1. We have not included any duct bank or raceways for feeders from the CUP to the Pavillion Transformer yard or O2 yard.
2. We have included aluminum feeders to starter/VFD and copper from starter/VFD to motor.
3. We have included EMT conduits for branch circuits.
4. We have included 600 LF of 2E6 for the primary electrical conduit as the routing and length is unknown at this time.
5. We have included 200 LF of 4T4 site communications conduit as the routing and length is unknown at this time.
6. We have not included concrete encasement for Life Safety feeders routed through the building.
7. We have not included generator factory witness testing.
8. We have excluded IBC seismic rated generators as that is not typical for this geographical area.
9. We have included electrical systems from the CUP to the Hospital ending at the connection point of the CUP to the Hospital, approximate column line K. Further coordination between the CUP and the Hospital project teams will be needed to understand the full scope delineation.

The Following Items are not included in our iGMP:

1. Insurance for Owner supplied items during construction
2. Any 3rd Party Testing services
3. Soil stabilization
4. Rock Excavation
5. Street and Sidewalk Rentals

ASSUMPTIONS, CLARIFICATIONS & QUALIFICATIONS
September 26, 2025

6. Owner and/or Architect office trailers, equipment, and supplies
7. Architect, engineer, or consultant's design fees or reimbursable expenses
8. Staff parking, craftsman parking, or buses/busing. JPS to provide shuttle from designed lot to designated project
9. Removal of unforeseen structures or obstructions
10. State, County, and local sales or use taxes
11. Owner project contingency
12. Permits, impact fees or utility company charges for system extensions
13. Any type of City of Fort Worth, AHJ and Franchise Utility fees and/or inspections
14. This line intentionally left blank.
15. Any Commissioning Agent cost, indoor air quality testing, building pressurization, fees, factory acceptance testing, and expenses
16. Test and Balance
17. LEED documentation, requirements, or fees
18. Site security personnel, badging of employees, gate guard and video surveillance
19. Weekend or night work
20. Any seismic requirements and additional support structures
21. BIM as-builts
22. Weather days are specifically excluded and will be calculated at fGMP
23. This line intentionally left blank.

End of Assumptions, Clarifications, and Qualifications

Attachment 5 – General Conditions Costs Breakdown

JPS Health Central Utilitiy Plant
IGMP AMENDMENT - ATTACHMENT 5
GENERAL CONDITIONS

		FOR REFERENCE ONLY	
GENERAL CONDITIONS	IGMP 2	IGMP 1	TOTAL
Field Supervision	$ 2,749,044	$ 765,765	$ 3,514,809
Project Management	$ 3,830,601	$ 782,656	$ 4,613,257
Sr Proj Coordinator	$ 125,438	$ 70,720	$ 196,158
Billings/Purchasing/PM Allocation	$ 138,585	$ 29,012	$ 167,597
Scheduling	$ 129,091	$ 35,942	$ 165,033
VDC	$ 146,557	$ 17,056	$ 163,613
Eng Service	$ 1,021,046	$ 9,949	$ 1,030,995
Quality	$ 34,936	$ 15,554	$ 50,490
Safety	$ 429,625	$ 60,554	$ 490,179
Drawing Reproduction	$ 2,500	$ 5,798	$ 8,298
Internal Copies on Copiers	$ 5,027	$ 116	$ 5,143
Travel	$ 16,000	$ 12,480	$ 28,480
Postage (Site)	$ 4,189	$ 964	$ 5,153
Water / Coffee / Working Meals	$ 1,600	$ 7,248	$ 8,848
Dunn Dashboard/Elec Documents	$ 80,000	$ 34,800	$ 114,800
Trailer	$ 263,308	$ 70,307	$ 333,615
Trailer Office Furn. & Misc Equip.	$ 14,737	$ 23,692	$ 38,429
Deck/Porch	$ 2,025	$ 5,964	$ 7,989
Temp Toilet - Holding Tank	$ 56,999	$ 2,313	$ 59,312
Telecopier Rental Setup	$ 600	$ 600	$ 1,200
Telecopier Rental/Service	$ 2,848	$ 1,639	$ 4,487
Paper & Expend. Supplies	$ 14,510	$ 334	$ 14,844
Project Signs at Gates	$ 4,841	$ 6,046	$ 10,887
JE Dunn Sign 3x5	$ 1,013	$ 336	$ 1,349
JE Dunn Polymetal Sign 4x8	$ 1,705	$ 1,272	$ 2,977
Safety Signs	$ 3,014	$ 1,632	$ 4,646
Router/Firewall	$ 3,602	$ 829	$ 4,431
Conference Phone	$ 3,892	$ -	$ 3,892
Switch, 8-port	$ 1,709	$ 393	$ 2,102
Wireless AP	$ 6,133	$ 706	$ 6,839
Video Conferencing	$ 6,400	$ 12,800	$ 19,200
TV	$ 5,460	$ 7,279	$ 12,739
TV Mounting Brackets	$ 484	$ 637	$ 1,121
Internet Services	$ 5,864	$ 1,349	$ 7,213
Internet Service & Hookup	$ 2,000	$ 5,000	$ 7,000
Pickup Truck, Rent	$ 105,733	$ 58,933	$ 164,666
Pickup Truck, Fuel	$ 37,619	$ 24,667	$ 62,286
Contractor's License	$ 1,000	$ 1,000	$ 2,000
	$ 9,259,735	*$ 2,076,342*	*$ 11,336,077*

JPS Health Central Utilitiy Plant
IGMP AMENDMENT - ATTACHMENT 5A
GENERAL CONDITIONS MATRIX

DESCRIPTION	Included In Fee	Included in Gen. Conditions	Included in GRs/Cost of Work	Excluded or By Owner
Home Office / Corporate Expenses				
1. Officers' Salaries and Benefits (Associated with Project)		X		
2. Officers' Automobile and Travel (Associated with Project)		X		
3. Executive Assistants	X			
4. Human Resources	X			
5. Information Technology - Home Office	X			
6. Home Office Equipment	X			
7. Home Office Rent and Utilities	X			
8. Interest on Borrowed Capital	X			
9. Profit	X			
10. Training (Associated with Project)		X		
11. Search Fees	X			
12. Relocation Costs/ Travel / Commuting/ Per Diem (per Company Policy)		X		
Project Personnel				
1. Project Executive		X		
2. Project Manager		X		
3. Assistant Project Manager		X		
4. Project Engineer		X		
5. General Superintendent		X		
6. Superintendent		X		
7. Assistant Superintendent		X		
8. Preconstruction Manager		X		
9. MEP Coordinator		X		
10. Scheduler		X		
11. BIM Coordinator		X		
12. Information Technology Technician		X		
13. Project Administrator		X		
14. Project Cost Accountant		X		
15. Estimator		X		
16. Safety		X		
17. Safety Director		X		
18. Quality Control Personnel		X		
19. DEI / Community Outreach Services			X	
20. Historical Consultant & Code Review (If required)				X
Project Expenses				
1. Office Trailer / Rent Office Space		X		
2. Owner Office Trailer (If required)				X
3. Storage Trailers			X	
4. Temp Roads/Staging Area			X	
5. Sanitary Facilities			X	
6. Field Office Electric & Water - Consumption				X
7. Field Office Electric - Installation			X	
8. Temp Lighting Installation and Maintenance			X	
9. Electric / Water / Gas Utility Consumption for Project				X
10. Temp Telephones		X		
11. Mobile Phones		X		
12. Field 2 Way Radios			X	
13. Office Supplies & Technology		X		

JPS Health Central Utilitiy Plant
IGMP AMENDMENT - ATTACHMENT 5A
GENERAL CONDITIONS MATRIX

14. Office Equipment		X		
15. Office Coffee, Water, Working Meals		X		
16. Blueprints/Copies for Contractor		X		
17. Record Documents/Warranty Manual		X		
18. Postage/Overnight		X		
19. First Aid Station/Safety Supplies / AED / Fire Extinguishers			X	
20. Project Related Travel Policy - lodging, meals, etc.		X		
21. Project Related Parking & Shuttles				X
22. Webcam / Project Photos (3rd Party)			X	
23. Property Survey			X	
24. Initial Baseline and Benchmark			X	
25. Survey & Layout and Field Engineers			X	
26. Protection of Finished Work			X	
27. Misc. Tools, Consumables & Equipment			X	
28. Site Perimeter Fencing			X	
29. Directional, Temp Signage and Traffic Control			X	
30. Project Safety Signs		X		
31. Erosion Control / SWPPP			X	
32. Building Permit Fees				X
33. Builders Risk Insurance (Premiums and Deductibles)			X	
34. Professional Liability Insurance (If required)			X	
35. Insurance			X	
36. Workers Compensation Insurance		X	X	
37. Contractor Performance & Payment Bond			X	
38. Legal Cost			X	
39. Street Cleaning			X	
40. Dust Control			X	
41. Dumpsters/Rubbish Removal/Recycling			X	
42. Trash Chute / Platforms			X	
43. Temp and Final Cleaning			X	
44. Street Closure / Sidewalk Rentals			X	
45. Sidewalk and Overhead Protection			X	
46. Safety Supplies and Interim Life Safety Measures			X	
47. General Fall Protection			X	
48. Barricades			X	
49. Temporary Enclosures			X	
50. Winter Conditions/Snow & Ice Removal			X	
51. Temporary Heater Rental & Fuel			X	
52. Staging			X	
53. Hoisting			X	
54. Temporary Elevator			X	
55. Mock Ups			X	
56. Trade Labor			X	
57. Purchased Project Materials			X	
58. Subcontracts & 3rd Party Agreements			X	
59. Commissioning / Test & Balance				X
60. Commissioning / Test & Balance Assistance			X	
61. Material Testing & Inspection / City Fees / Impact Fees				X
62. Badging / Background / Drug Tests			X	
63. All items not specifically listed above in GC's but used or consumed on-site.			X	

JPS Health Central Utilitiy Plant
IGMP AMENDMENT - ATTACHMENT 5A
GENERAL CONDITIONS MATRIX

14. Office Equipment		X		
15. Office Coffee, Water, Working Meals		X		
16. Blueprints/Copies for Contractor		X		
17. Record Documents/Warranty Manual		X		
18. Postage/Overnight		X		
19. First Aid Station/Safety Supplies / AED / Fire Extinguishers			X	
20. Project Related Travel Policy - lodging, meals, etc.		X		
21. Project Related Parking & Shuttles				X
22. Webcam / Project Photos (3rd Party)			X	
23. Property Survey			X	
24. Initial Baseline and Benchmark			X	
25. Survey & Layout and Field Engineers			X	
26. Protection of Finished Work			X	
27. Misc. Tools, Consumables & Equipment			X	
28. Site Perimeter Fencing			X	
29. Directional, Temp Signage and Traffic Control			X	
30. Project Safety Signs		X		
31. Erosion Control / SWPPP			X	
32. Building Permit Fees				X
33. Builders Risk Insurance (Premiums and Deductibles)			X	
34. Professional Liability Insurance (If required)			X	
35. Insurance			X	
36. Workers Compensation Insurance		X	X	
37. Contractor Performance & Payment Bond			X	
38. Legal Cost			X	
39. Street Cleaning			X	
40. Dust Control			X	
41. Dumpsters/Rubbish Removal/Recycling			X	
42. Trash Chute / Platforms			X	
43. Temp and Final Cleaning			X	
44. Street Closure / Sidewalk Rentals			X	
45. Sidewalk and Overhead Protection			X	
46. Safety Supplies and Interim Life Safety Measures			X	
47. General Fall Protection			X	
48. Barricades			X	
49. Temporary Enclosures			X	
50. Winter Conditions/Snow & Ice Removal			X	
51. Temporary Heater Rental & Fuel			X	
52. Staging			X	
53. Hoisting			X	
54. Temporary Elevator			X	
55. Mock Ups			X	
56. Trade Labor			X	
57. Purchased Project Materials			X	
58. Subcontracts & 3rd Party Agreements			X	
59. Commissioning / Test & Balance				X
60. Commissioning / Test & Balance Assistance			X	
61. Material Testing & Inspection / City Fees / Impact Fees				X
62. Badging / Background / Drug Tests			X	
63. All items not specifically listed above in GC's but used or consumed on-site.			X	

Attachment 5.1 – Stipulated Personnel Rates

Docusign Envelope ID: 7C425E2F-80F8-4368-A70F-DA1DF2C21AED

EXHIBIT F

Cameron J Geertsema, PE CEM Digitally signed by Cameron J Geertsema, PE CEM DN: C=US, E=cgeertsema@broaddiusus.com, O=Broaddus Levis, OU=JPS Bond Program, CN="Cameron J Geertsema, PE CEM" Date: 2024.09.10 09:34:43-05'00'

CONTRACTOR'S PERSONNEL RATES *

Effective 04/01/2024

Senior Vice President / Group Manager 3	$	290.00	/ HR	**
Project Executive / VP (Group Manager 2)	$	259.00	/ HR	**
Project Executive / VP (Group Manager 1)	$	218.00	/ HR	**
Project Director	$	201.00	/ HR	**
Senior Project Manager	$	166.00	/ HR	**
Project Manager 2	$	136.00	/ HR	**
Project Manager 1	$	115.00	/ HR	**
Senior Project Engineer	$	94.00	/ HR	**
Project Engineer 2 / Field Engineer 2	$	84.00	/ HR	**
Project Engineer 1 / Field Engineer 1	$	76.00	/ HR	**
General Superintendent	$	234.00	/ HR	***
Senior Superintendent	$	170.00	/ HR	***
Superintendent 3	$	144.00	/ HR	***
Superintendent 2	$	125.00	/ HR	***
Superintendent 1 / Assistant Superintendent	$	100.00	/ HR	
Administrative Assistant / Executive Assistant	$	94.00	/ HR	
Senior Project Coordinator	$	80.00	/ HR	
Project Coordinator	$	68.00	/ HR	
Estimating Director	$	220.00	/ HR	
Senior Estimating Manager	$	168.00	/ HR	
Estimating Manager	$	122.00	/ HR	
Estimating Engineer	$	90.00	/ HR	
Senior MEP Coordinator	$	140.00	/ HR	
MEP Coordinator	$	75.00	/ HR	
Safety Personnel	$	137.00	/ HR	
Quality Assurance Personnel	$	137.00	/ HR	
Virtual Design & Construction (VDC) Personnel	$	120.00	/ HR	
Scheduler	$	128.00	/ HR	
Lean Specialist	$	131.00	/ HR	

Trade labor personnel subject to overtime will be billed at their actual wage rate plus 41.60% for labor burden. Labor burden will be increased 4% January 1 of each calendar year starting January 1, 2026.

* All personnel rates will be increased 4% January 1 of each calendar year starting January 1, 2026.

** An additional $5.36/hr will be charged for payroll, purchasing, billings and accounts payable direct project support services. This rate will be increased 4% January 1 of each calendar year starting January 1, 2026.

*** An additional $9.67/hr will be charged for JE Dunn owned truck rental (if assigned to the employee). Actual fuel costs are not included in the hourly rental rate and will be billed as incurred. This rate will be increased 4% January 1 of each calendar year starting January 1, 2026.

Attachment 6 – Allowances

(Not Used)

Attachment 7 – Project Schedule

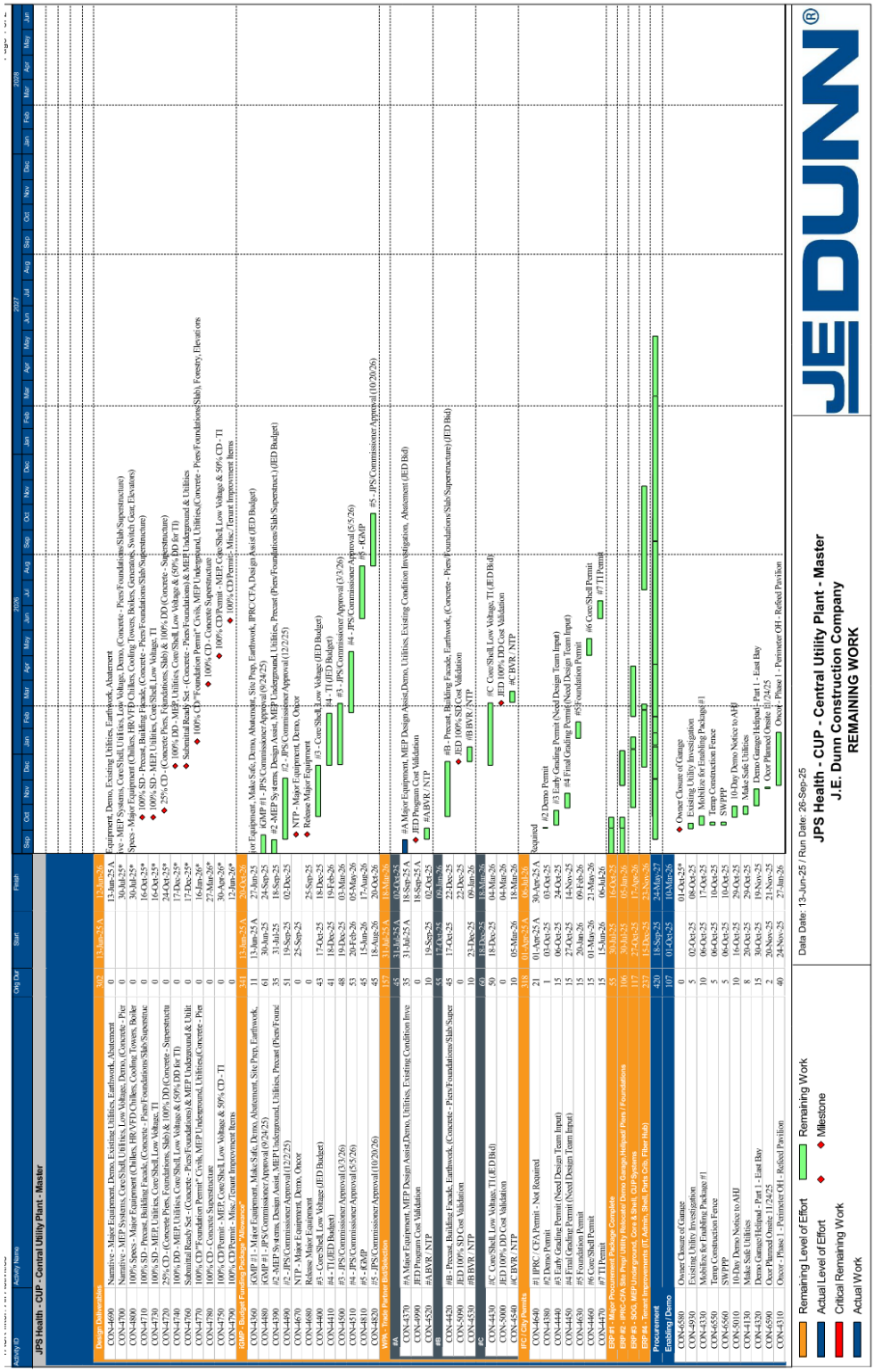

Activity ID	Activity Name	Orig Dur	Start	Finish
CON-4140	Demo Remaining Garage - Part 2	20	28-Jan-26	24-Feb-26
CON-4600	Abatement	30	28-Jan-26	10-Mar-26
Construction		660	25-Feb-26	04-Oct-28
Early Sitework		30	18-Mar-26	28-Apr-26
CON-5220	Site Utilities	30	18-Mar-26	28-Apr-26
Foundations		108	25-Feb-26	28-Jul-26
CON-4150	Mass Excavation	15	25-Feb-26	17-Mar-26
CON-1050	Building Pad Subgrade	10	18-Mar-26	31-Mar-26
CON-5100	Drilled Piers (Quantity TBD)	40	13-Apr-26	08-Jun-26
CON-5130	UG MEP (Beneath Mud Slab)	15	26-May-26	15-Jun-26
CON-1060	FRP Perimeter Wall / GB	15	02-Jun-26	22-Jun-26
CON-5120	Pier Caps (Quantity TBD)	25	09-Jun-26	14-Jul-26
CON-6570	Building Pad Concrete Grade	5	15-Jul-26	21-Jul-26
CON-1280	Mud Slab (Crawlspace)	5	22-Jul-26	28-Jul-26
Structure		111	29-Jul-26	08-Jan-27
CON-5150	FRP L0	15	29-Jul-26	18-Aug-26
CON-5160	FRP Retaining Walls	15	12-Aug-26	01-Sep-26
CON-1070	FRP L1	12	02-Sep-26	18-Sep-26
CON-1130	FRP L2	12	21-Sep-26	06-Oct-26
CON-1080	FRP L3	12	07-Oct-26	22-Oct-26
CON-1120	FRP L4 Roof	12	23-Oct-26	09-Nov-26
CON-5390	Remove Reshores at Crawlspace	10	23-Oct-26	05-Nov-26
CON-5400	Crawlspace MEP	40	06-Nov-26	08-Jan-27
CON-5490	Remove Reshores L0 - L3	7	10-Nov-26	18-Nov-26
Exterior		65	10-Nov-26	17-Feb-27
CON-5190	Precast - South Elevation	5	10-Nov-26	16-Nov-26
CON-5200	Precast - East Elevation	5	17-Nov-26	23-Nov-26
CON-5210	Precast - North Elevation	5	24-Nov-26	02-Dec-26
CON-5360	Grout & Caulk Precast	12	02-Dec-26	17-Dec-26
CON-1140	Precast - West Elevation	5	03-Dec-26	09-Dec-26
CON-4160	Roof - MEP Supports & Screen Wall	15	10-Dec-26	05-Jan-27
CON-5370	Waterproof Precast	5	18-Dec-26	28-Dec-26
CON-5380	Backfill at Precast	3	29-Dec-26	04-Jan-27
CON-5170	L2 Roof	10	06-Jan-27	20-Jan-27
CON-1150	L4 Roof	20	21-Jan-27	17-Feb-27
CON-4170	Windows	15	21-Jan-27	10-Feb-27
CON-1170	Building Dry-In	0		17-Feb-27

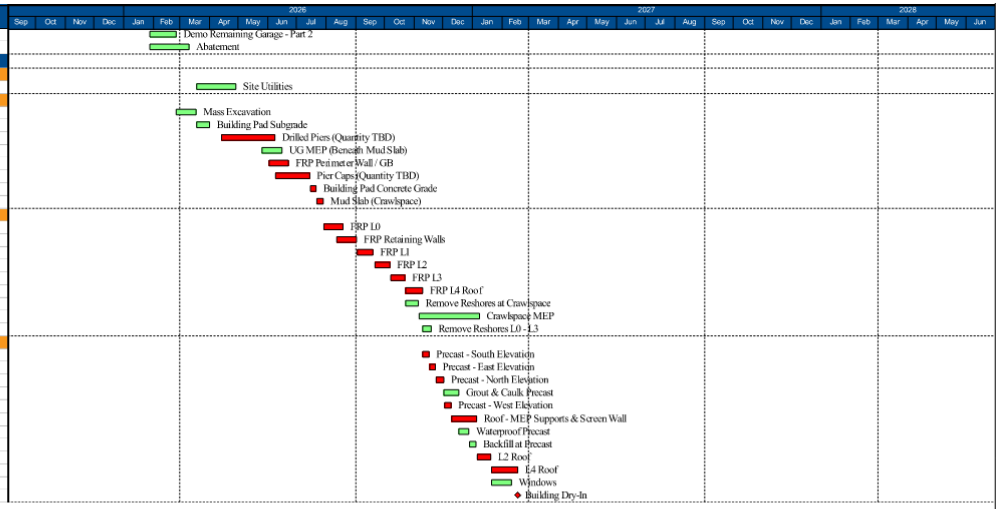

Remaining Level of Effort
Actual Level of Effort
Critical Remaining Work
Actual Work
Remaining Work
Milestone

Data Date: 13-Jun-25 / Run Date: 26-Sep-25

JPS Health - CUP - Central Utility Plant - Master
J.E. Dunn Construction Company
REMAINING WORK

Attachment 8 – List of Key Personnel

JPS Health Central Utilitiy Plant
IGMP AMENDMENT - ATTACHMENT 8
CONSTRUCTION MANGERS KEY PERSONNEL

TEAM MEMBER	ROLE	EMAIL	PHONE
Matt Robben	Project Executive	matt.robben@jedunn.com	214- 205-4580
Herb Reed	V.P. Operations	hreed@sourcebuild.net	972-750-6049
Chet Farnsworth	V.P. Preconstruction	cfarnsworth@sourcebuild.net	817-504-1967
Chuck Sloma	Sr. Precon Manager	chuck.sloma@jedunn.com	214-551-2039
Patrick Caskey	Precon Manager	patrickcaskey@jedunn.com	317-306-6390
Trent Hirth	Sr. Estimator	thirth@sourcebuild.net	817-455-6006
Scott Osche	Superintendent 3	scott.osche@jedunn.com	214-601-2743
Ralph Frederickson	Superintendent	ralph.frederickson@jedunn.com	346-818-1490
Nick Sax	Superintendent 1	nick.sax@jedunn.com	469-600-0728
Stephanie Long	SR. Project Manager	stephanie.long@jedunn.com	214-585-3141
Angelas Guillory	Project Manager 2	angelas.guilloryjr@jedunn.com	281-673-8109
Jeanie Benedict	Project Engineer 1	jeanie.benedict@jedunn.com	469-849-7264
Angela Hart	Project Coordinator	angela.hart@jedunn.com	254-500-4200

Attachment 9 – List of Drawings and Specifications

JPS Health Central Utilitiy Plant
WORK PACKAGE AUTHORIZATION - ATTACHMENT 4
LIST OF DRAWINGS AND SPECIFICATIONS

Number	Description	Issue Date	Revised	Notes
1-122	BASIS OF DESIGN NARRATIVE	7/30/2025		Jacobs
1-6	TECHNOLOGY PROGRAM NARRATIVE	7/31/2025		Burns
SB099	STRUCTURAL CRAWLSPACE PLAN	7/29/2025		JQ
SB100 - ALT	STRUCTURAL LOWER LEVEL FRAMING PLAN - PAN JOIST OPTION	7/29/2025		JQ
SB101 - ALT	STRUCTURAL LEVEL 1 FRAMING PLAN - PAN JOIST OPTION	7/29/2025		JQ
SB102 - ALT	STRUCTURAL LEVEL 2 FRAMING PLAN - PAN JOIST OPTION	7/29/2025		JQ
SB103 - ALT	STRUCTURAL LEVEL 3 FRAMING PLAN - PAN JOIST OPTION	7/29/2025		JQ
SB104 - ALT	STRUCTURAL ROOF FRAMING PLAN - PAN JOIST OPTION	7/29/2025		JQ

Attachment 10 – Construction Manager-Owned Equipment Rental Rates

(Not Used)

Attachment 11 – Construction Manager's Quality Control Plan

(Not Used)

Attachment 12 – Site Logistics

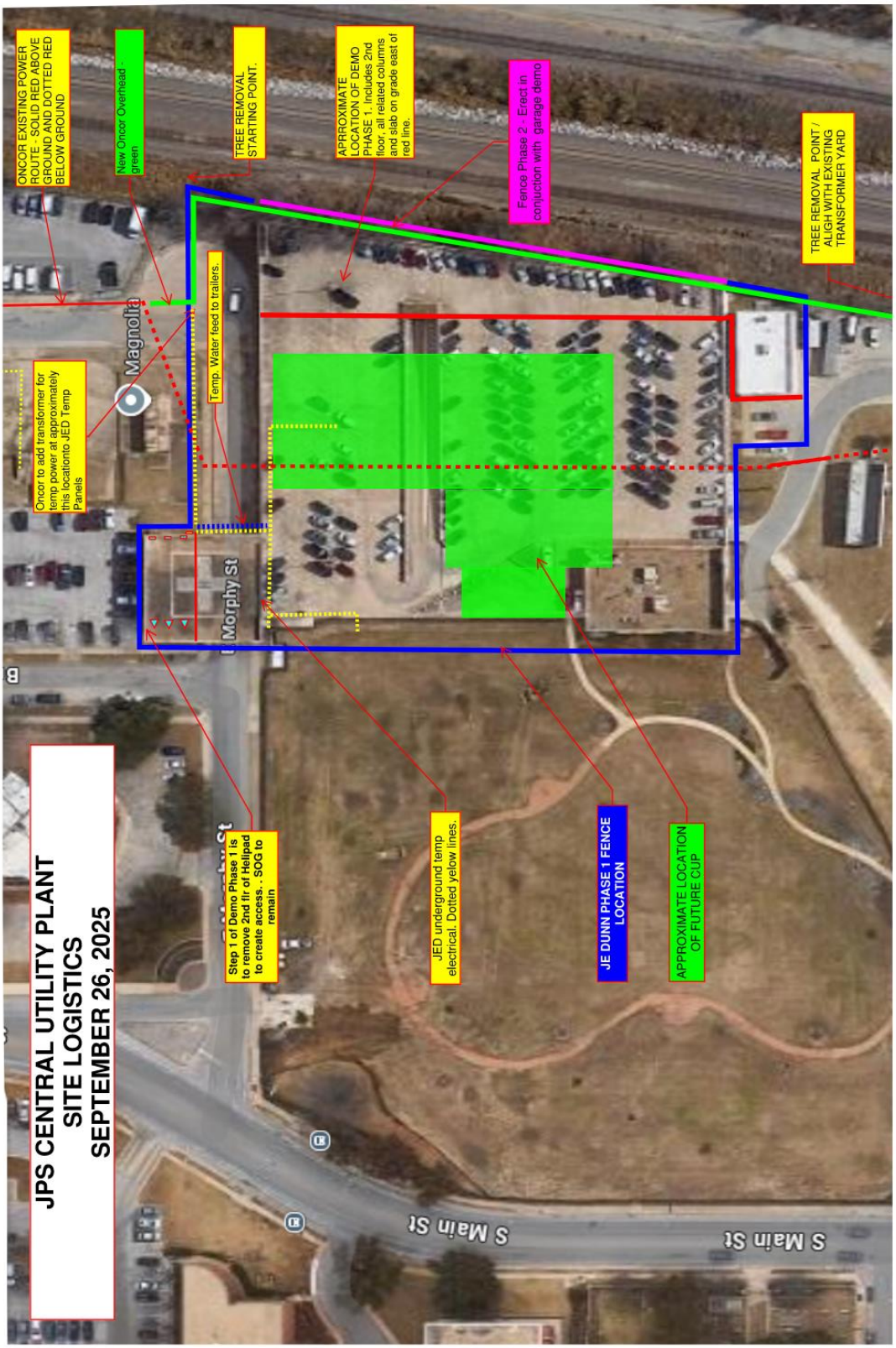

TARRANT COUNTY
COMMISSIONERS COURT COMMUNICATION

Court Date: December 9, 2025	**Court Order #:**	**Page:** 1 of 1
Department: Administrator	**Prepared By:** Lani Taylor	**Approved By:** Daphne Walker

SUBJECT:

Consideration of the Initial Guaranteed Maximum Price Amendment No. 2 between Tarrant County Hospital District, d/b/a JPS Health Network and J.E. Dunn-Source, A Joint Venture, for Services Related to the Medical Outpatient Building Project

COMMISSIONERS COURT ACTION REQUESTED

It is requested that the Commissioners Court consider the Initial Guaranteed Maximum Price Amendment No. 2 between Tarrant County Hospital District, d/b/a JPS Health Network (TCHD) and J.E. Dunn-Source, A Joint Venture, for services related to the Medical Outpatient Building (MOB) Project

BACKGROUND

On September 16, 2025, the Commissioners Court, through Court Order #146001, approved Amendment #1 to the Initial Guaranteed Maximum Price (IGMP) for services related to the MOB Project as part of the JPS Master Facilities Plan.

Amendment No. 2 includes additional services for labor, material, supervision, and planning for the structure, exterior skin, and mechanical, electrical and plumbing systems for the MOB.

This Amendment involves construction in an amount exceeding $500,000.00 which requires Commissioners Court approval.

TCHD's Board of Managers approved the attached IGMP Amendment at its November 13, 2025, Board of Managers meeting. TCHD Counsel reviewed the Agreement and approved it as to form.

FISCAL IMPACT

Funding in the amount of $216,711,827.00 is available in TCHD's approved Master Facilities Plan budget.

Attachments

09.29.25_JPS MOB iGMP No 2_Proposal.pdf

INITIAL GUARANTEED MAXIMUM PRICE AMENDMENT # 2 –
STRUCTURE, SKIN AND MEP

This **INITIAL GUARANTEED MAXIMUM PRICE AMENDMENT #1** ("Amendment") is executed on the [____] day of [____], 2025 (the "Effective Date") between **TARRANT COUNTY HOSPITAL DISTRICT D/B/A JPS HEALTH NETWORK** ("Owner") and **J.E. DUNN CONSTRUCTION COMPANY** ("Construction Manager") pursuant to that certain Standard Form of Agreement Between Owner and Construction Manager, AIA Document A133-2019 dated **October 8, 2024** (the "Agreement"), for the construction of the **JPS MEDICAL OFFICE BUILDING** project to be located at 1575 S. Main Street in Fort Worth, Texas 76104 (the "Project"). Pursuant to Section 3.2.1 of the Agreement, this Amendment is intended to establish the Initial Guaranteed Maximum Price for the Mobilization/Earthwork/Preconstruction Phase of the Project.

WHEREAS, the Agreement provides that the parties will establish an Initial Guaranteed Maximum Price ("IGMP") for each Phase of the Project through an IGMP Amendment; and

WHEREAS, Owner and Construction Manager now desire to amend the Agreement for the purpose of establishing the IGMP for the Structure, Skin and Mechanical, Electrical and Plumbing Systems Phases of the Project, and all supporting exhibits related thereto.

NOW THEREFORE, in consideration of the covenants and conditions contained herein, and other good and valuable consideration, Owner and Construction Manager hereby agree to amend the Agreement as follows:

1. All capitalized, undefined terms shall have the meaning set forth in the Agreement.

2. The IGMP for the Mobilization/Earthwork/Preconstruction Phase of the Project shall be Two hundred sixteen million, seven hundred eleven thousand, eight hundred twenty seven and No/100 Dollars ($216,711,827.00). The IGMP Breakdown is set forth in **Attachment 1** hereto.

3. The list of Accepted Alternates, if any, included in the IGMP is set forth in **Attachment 2** hereto.

4. The list of Unit Prices, if any, included in the IGMP is set forth in **Attachment 3** hereto.

5. The list of Construction Manager's assumptions, clarifications, and qualifications for the IGMP is set forth in **Attachment 4** hereto.

6. Construction Manager's General Conditions Costs Breakdown for the IGMP is set forth in **Attachment 5** hereto. Construction Manager's stipulated Personnel Rates are set forth in **Attachment 5.1** hereto.

7. Allowances included in the IGMP are set forth in **Attachment 6** hereto.

8. Construction Manager's updated Project Schedule is set forth in **Attachment 7** hereto.

9. Construction Manager's List of Key Personnel is set forth in **Attachment 8** hereto.

10. The list of Drawings and Specifications on which the IGMP is based is set forth in **Attachment 9** hereto.

11. Construction Manager-Owned Equipment Rental Rates are set forth in **Attachment 10** hereto.

12. If applicable, Construction Manager's Quality Control Plan is set forth in **Attachment 11** hereto.

13. The Construction Manager's Site Logistics are set forth in **Attachment 12** hereto.

14. Entire Amendment: This Amendment supersedes all prior negotiations, representations or agreements, either written or oral, related to the IGMP for the Mobilization/Earthwork/Preconstruction Phase and/or determination of such IGMP value as of the date hereof between the parties.

15. Except as specifically modified by this Amendment, all terms of the Agreement remain in full force and effect.

This Amendment is entered into as of the day and year first written above.

Owner:	**Construction Manager:**
TARRANT COUNTY HOSPITAL DISTRICT D/B/A JPS HEALTH NETWORK	**J.E. DUNN CONSTRUCTION COMPANY**
_____	_____
By:_____	**By:** _____
Its: _____	**Its:**_____

Attachment 1 – IGMP Breakdown

Date 9/29/2025 3:54 PM *iGMP02* Page 1

JPS Health MOB

Item	Description	Unit	Quantity	Unit Price	Cost
01 00 00	General Conditions	LS	1	13,562,182	13,562,182
01 00 00	General Requirements	LS	1	5,939,911	5,939,911
01 54 00	Hoisting	LS	1	2,577,290	2,577,290
03 32 00	Concrete Less iGMP1 Foundations	LS	1	6,622,526	6,622,526
04 40 00	Exterior Stone	LS	1	385,898	385,898
05 50 00	Structural and Miscellaneous Steel	LS	1	3,954,265	3,954,265
07 24 00	Exterior Stucco	LS	1	45,293	45,293
07 24 00	Exterior Metal Panels	LS	1	45,293	45,293
07 42 00	Waterproofing Less iGMP1 Crawlspace Foundation Walls	SF	1	510,165	510,165
07 46 00	Prefabricated Exterior Walls Less iGMP1	LS	1	8,454,595	8,454,595
07 50 00	Membrane Roofing	LS	1	1,636,050	1,636,050
08 40 00	Glass and Glazing	LS	1	5,423,202	5,423,202
21 00 00	Fire Protection	LS	1	1,364,048	1,364,048
23 00 00	Mechical Less iGMP1	LS	1	61,320,043	61,320,043
26 00 00	Electrical Less iGMP 1	LS	1	38,791,910	38,791,910
27 00 00	Low Voltage	LS	1	9,097,221	9,097,221
	Subtotal				159,729,892
	Building Permit	0.00%			0
	Bonds and Insurance	3.42%			7,411,544
	Builders Risk Insurance	0.70%			1,516,983
	JED Design and Estimate Contingency	4.00%			6,746,337
	JED Construction Contingency	4.00%			7,016,190
	JED Escalation Contingency	3.00%			5,472,628
	Owner Contingency	6.00%			11,273,614
	JED Tariff Contingency	5.21%			11,950,031
	Fee	2.65%			5,594,606
	Total				**$216,711,827**

All iGMPs are consolidated into a single guarantee and do not establish separate or line-item guarantees. Each iGMP will continue to be rolled forward as part of the combined total until the final GMP (fGMP) is accepted.

Attachment 2 – Accepted Alternates

(Not Used)

Attachment 3 – Unit Prices

(Not Used)

Attachment 4 – Assumptions, Clarifications, and Qualifications

(Attached)

JPS Medical Outpatient Building
Fort Worth, TX

IGMP CLARIFICATIONS AND ASSUMPTIONS
9/29/2025

General:

1. This iGMP provides for a partial project scope related to Hoisting, Concrete, Exterior Stone Façade, Structural Steel, Stucco façade, Metal Panels, Waterproofing, Prefabricated Exterior Wall Panels, Membrane Roofing, Glazing, Plumbing, Mechanical and Electrical.
2. This iGMP is limited to covering General Conditions costs commencing F… General Conditions ending May 31, 2027, as well as the scope defined h… Conditions and the Schedule.
3. This iGMP's scope of the work is based on the attached schedule.
4. This iGMP is based Hoefer Welker's 100% SD package date 08.01.2025 scopes described herein and in our cost summary.
5. Construction start is subject to approval of all applicable permits from jurisdiction so that construction can commence and proceed without ir… assumed JPS will apply for all applicable permits.
6. This iGMP includes a 4% Construction Contingency and 4% Design Cont… exclusive use in completed the scope defined herein.
7. This iGMP includes an escalation contingency of 3% for JE Dunn's exclusive use in completed the scope defined herein.
8. This iGMP includes a 5.21% Tariff Contingency.
9. This iGMP includes a 6% Owner Contingency.
10. We have included Builder's Risk insurance at of 0.70% of total cost.
11. We have included our combined insurance and bond rate of 3.42% of total cost.
12. The project site is assumed to be free of any above ground or below ground hazardous materials and/or hazardous conditions, as well as any environmental and/or endangered species, flora, fauna, or wetlands requiring mitigation.
13. Our iGMP does not include any sales taxes on incorporated materials. JPS to provide Texas Sales and Use Tax Exemption Certificate.
14. This iGMP is based on the Owner providing clear access to the site during construction operations.
15. All iGMPs are consolidated into a single guarantee and do not establish separate or line-item guarantees. Each iGMP will continue to be rolled forward as part of the combined total until the final GMP (fGMP) is accepted.

ZEmbaye
2025-10-03 20:52:55

Chando, do you believe the project

ZEmbaye
2025-10-03 20:53:15
---
extend how long these general conditions will be endorsed?

ZEmbaye
2025-10-03 21:17:17

Chando is this your understanding?

The Following Items are not included in our iGMP:

1. Bid bonds.
2. Insurance for Owner supplied items during construction.
3. 3rd Party Testing.

ZEmbaye
2025-10-03 21:23:02

Chando, please review these exclusions and confirm you agree. Some of these seem important. Do we have another vendor to complete them?

4. Soil stabilization.
5. Rock Excavation.
6. Owner and/or Architect office trailers, equipment and supplies.
7. Architect, engineer, or consultant's design fees or reimbursable expenses.
8. Removal of unforeseen structures or obstructions.
9. State, County, and Local Sales or use taxes.
10. Owner project contingency.
11. Impact fees or utility company charges for system extensions.
12. Any type of City of Fort Worth, AHJ and Franchise Utility fees and or inspections.
13. Design Fees.
14. Material testing services.
15. Any Commissioning Agent cost, fees, factory acceptance testing, and expenses.
16. The following 3rd Party Testing & Inspections for City of Fort Worth or AHJ:
    a. Building Commissioning
    b. Indoor Air Quality Testing
    c. Building Pressurization
17. LEED documentation, requirements, or fees.
18. Site security personnel, gate guard and video surveillance.
19. Any abatement or Mitigation of any existing hazardous materials, unless stated otherwise.
20. Weekend or night work.
21. Any seismic requirements and additional support structures.
22. Any work associated with the existing garage scope.
23. Exterior Skin Laboratory testing.
24. Any Medical equipment, Fixtures, Furniture or Misc Equipment unless listed as include here in, including but not limited to Artwork, Appliances, Medical equipment, Interior or exterior furniture, filing cabinets, glass writing boards, Cubicle Curtain track, etc.
25. BIM as-builts.
26. Tower crane lights beyond JE Dunn standard tower crane lights.
27. Background check and E-verify documentation will be approved based upon Subcontractor letterhead approval and JE Dunn will not have to verify employees individually.
28. Environmental Site Assessment, dated December 2021 Prepared by Halff
29. JPS Outpatient Design Guidelines.
30. Covalus or JPS master responsibility matrix.
31. Weather days are specifically excluded and will be included at fGMP.

Scope Specific Clarifications

Structure

1. We have included all battered piles as straight shaft drilled piers as there is a concern with lack of space to install these and feasibility to keep these plum at the required embedment depth.
2. We have included 100% casing of piers per Geotech report. We have /have not included sulfide resistant concrete per Geotech report.
3. Enclosed Penthouse is assumed as concrete column extensions of main building framing and concrete perimeter and midspan beam framing. No transfer beams are included. Roof of penthouse is assumed as steel framing with Metal deck, but no concrete.

4. Penthouse walls are assumed to be horizontal tube framing members to support skin.
5. Elevator over runs encloser is included as concrete. We assume it to be approximately 4 foot tall.
6. South stair to roof is assumed to be steel columns and beams with metal deck roof; no concrete.
7. We have included both stairs as steel pan concrete filled with applied abrasive strips.
8. We have included concrete steps from 1st floor down to crawl space at both stairs. (8 VF)
9. We have included south stair to roof and north stair to 9th floor with steel ladder to roof.
10. The 3 floor levels of walkway (2nd, 3rd and 4th) from Garage Elevator lobby to MOB are is to be supported by two concrete columns near garage and 8" concrete flat slab with roof of level 4 being a steel canopy.
11. We have not included any additional piers or footings to provide bridge from crawl space to slab on grade sidewalks or paving. This line of potential movement needs to be coordinated with architectural elements to determine needs.
12. We have included an Owner Allowance of $711,196 for miscellaneous steel for ceiling hung medical equipment.
13. We have not included any Class 'A' concrete finishes, colored concrete or architectural concrete.
14. We have not included any structural steel members which are galvanized, stainless, or AESS.
15. We have not included any structural considerations for Courtyards awnings or shade structures. Shade structures shown on Landscape Drawings will be included in a future package.

Architecture

1. Exterior skin is included as a prefabricated panel assemblies by Baker Triangle including pre-plazed windows within these panels. Only the Northeast and Southeast stair towers and 1st floor have conventional exterior glazing systems.
2. We have included an allowance of $289,322 for 12" horizontal sunshade system where shown per elevations.
3. We have include stone exterior skin cladding per elevations except at the roof top penthouse. This will be a metal panel with architectural louvers as needed for AHU locations.
4. West wall at 5 bays under courtyards is studs and Plaster. Exterior wall at dock is also included as stud wall with Plaster finish.
5. Vol clay panels and drainage mat is included at all shored areas receiving concrete walls. All walls above shoring but below 2nd floor include sheet waterproofing applied to cast in place walls.
6. All elevator pits include interior applied crystalline waterproofing.
7. The 3 levels of walkway between the garage and MOB are assumed to receive traffic coating.
8. Sheet membrane waterproofing is included at 1st floor exterior paving where it is over crawl space.
9. 1st floor exterior soffit is included as aluminum metal ceiling.
10. We have not included exterior skin Laboratory testing. Any provisions for additional support requirements or strengthened design due to a wind tunnel study Existing manufacture test reports will be provided.
11. We have included interior glass film at approximately 30% of the interior storefront per discussions with the Design Team. This resulted in 2,642 SF and a total of $92,463.
12. We have not included any Fritted glazing, heat soaking of glass or warranties beyond standard manufacture warranties.
13. We have included 4-ply modified bit roofing at main roof, penthouse roof, south stair roof, 6 level roof on south end of building, 2nd level roof south of walkway from garage.
14. An expansion joint is included from Courtyard slab to JPS existing garage at level 2, and at floor of garage walkway on levels 1, 2, 3, and 4.
15. We have included 1ea. roof Hatch at South stair.
16. We have included roof of 4th floor walkway from garage to be Avadek or similar canopy.

17. We have not assumed any CMU or brick walls.
18. We have not included aluminum “Mull It Overs” products. Room seals to be accomplished with Drywall.

Fire Protection

1. Fully sprinkled with wet pipe automatic sprinkler system is included throughout building.
2. Firefighter air replenishment system (FARS) is included with 10 stations 5 in each stair.
3. We have included the painting of all fire piping. (red)
4. We have excluded pre Action, clean agent, and nitrogen systems.

Plumbing & HVAC

1. We have included ducted returns at the ASC areas only, all other building areas will have plenum returns.
2. We have not included seismic isolation or accommodation as typical within this region.

Electrical

1. Emergency, egress and exit lighting will be circuited to panels on the emergency distribution system. Battery packs are not included.
2. We have included SPDs at the main switchboard only, branch and distribution panels do not include SPDs.
3. We have included metering per IECC 2015 as listed in the documents.
4. 1500 KW Emergency Generator with diesel fuel tank and ATS switching.
5. We have included Tele/ data, real time location services, DAS, fire alarm, FARS, public address/ overhead paging, area of rescue / two-way communication, clock system, audio/ visual, video surveillance, access control, intrusion detection, nurse call, and security systems as defined in the narratives.
6. We have excluded ERRCS (both JPS and Fort Worth) as the JPS Master Responsibility Matrix lists this as Vendor Provided Vendor Installed.
7. Per discussions with the Design Team, we have excluded the GPON system and have included a CAT6A Solution within our low voltage iGMP.

Attachment 5 – General Conditions Costs Breakdown

JPS Health Medical Office Buil
GENERAL CONDITIONS

GENERAL CONDITIONS	IGMP 2
Field Supervision	5,001,799
Project Management	5,112,127
Sr Proj Coordinator	461,927
Billings/Purchasing/PM Allocation	189,500
Scheduling	234,765
VDC	111,406
Eng Service	64,985
Quality	101,595
Safety	395,525
Drawing Reproduction	37,871
Internal Copies on Copiers	758
Travel	81,516
Postage (Site)	6,297
Water / Coffee / Working Meals	47,342
Dunn Dashboard/Elec Documents	227,305
Trailer and Office Rental	459,229
Trailer Office Furn. & Misc Equip.	154,751
Deck/Porch	38,955
Temp Toilet - Holding Tank	15,108
Telecopier Rental Setup	3,919
Telecopier Rental/Service	10,706
Paper & Expend. Supplies	2,182
Project Signs at Gates	39,491
JE Dunn Sign 3x5	2,195
JE Dunn Polymetal Sign 4x8	8,308
Safety Signs	10,660
Router/Firewall	5,415
Switch, 8-port	2,567
Wireless AP	4,611
Video Conferencing	83,607
TV	47,545
TV Mounting Brackets	4,161
Internet Services	8,811
Internet Service & Hookup	32,659
Pickup Truck, Rent	384,937
Pickup Truck, Fuel	161,119
Contractor's License	6,532
	13,562,182

Attachment 5.1 – Labor Burden Schedule

Docusign Envelope ID: 7C425E2F-80F8-4368-A70F-DA1DF2C21AED

EXHIBIT F

Cameron J Geertsema, PE CEM Digitally signed by Cameron J Geertsema, PE CEM DN: C=US, E=cgeertsema@broaddussw.com, O=Broaddus Levis, OU=JPS Bond Program, CN="Cameron J Geertsema, PE CEM" Date: 2024.09.10 09:34:43-05'00'

CONTRACTOR'S PERSONNEL RATES *

Effective 04/01/2024

Senior Vice President / Group Manager 3	$	290.00	/ HR	**
Project Executive / VP (Group Manager 2)	$	259.00	/ HR	**
Project Executive / VP (Group Manager 1)	$	218.00	/ HR	**
Project Director	$	201.00	/ HR	**
Senior Project Manager	$	166.00	/ HR	**
Project Manager 2	$	136.00	/ HR	**
Project Manager 1	$	115.00	/ HR	**
Senior Project Engineer	$	94.00	/ HR	**
Project Engineer 2 / Field Engineer 2	$	84.00	/ HR	**
Project Engineer 1 / Field Engineer 1	$	76.00	/ HR	**
General Superintendent	$	234.00	/ HR	***
Senior Superintendent	$	170.00	/ HR	***
Superintendent 3	$	144.00	/ HR	***
Superintendent 2	$	125.00	/ HR	***
Superintendent 1 / Assistant Superintendent	$	100.00	/ HR	
Administrative Assistant / Executive Assistant	$	94.00	/ HR	
Senior Project Coordinator	$	80.00	/ HR	
Project Coordinator	$	68.00	/ HR	
Estimating Director	$	220.00	/ HR	
Senior Estimating Manager	$	168.00	/ HR	
Estimating Manager	$	122.00	/ HR	
Estimating Engineer	$	90.00	/ HR	
Senior MEP Coordinator	$	140.00	/ HR	
MEP Coordinator	$	75.00	/ HR	
Safety Personnel	$	137.00	/ HR	
Quality Assurance Personnel	$	137.00	/ HR	
Virtual Design & Construction (VDC) Personnel	$	120.00	/ HR	
Scheduler	$	128.00	/ HR	
Lean Specialist	$	131.00	/ HR	

Trade labor personnel subject to overtime will be billed at their actual wage rate plus 41.60% for labor burden. Labor burden will be increased 4% January 1 of each calendar year starting January 1, 2026.

* All personnel rates will be increased 4% January 1 of each calendar year starting January 1, 2026.

** An additional $5.36/hr will be charged for payroll, purchasing, billings and accounts payable direct project support services. This rate will be increased 4% January 1 of each calendar year starting January 1, 2026.

*** An additional $9.67/hr will be charged for JE Dunn owned truck rental (if assigned to the employee). Actual fuel costs are not included in the hourly rental rate and will be billed as incurred. This rate will be increased 4% January 1 of each calendar year starting January 1, 2026.

Attachment 6 – Allowances

JPS Health Medical Office Building
IGMP AMENDMENT - ATTACHMENT 6
ALLOWANCES

(Not Used)

ALLOWANCE DESCRIPTION	AMOUNT
Miscellaneous Steel (Ceiling Hung Med. Eqmt.	$ 711,196
Horizontal Sunshade Systems	$ 289,322
Interior Glass Film	$ 92,463
	$ 1,092,981

Attachment 7 – Project Schedule

(Attached)

JPS Health - MOB - Outpatient Center - Master		1546	05-Nov-24 A	17-Dec-30	
Franchise Utilities - Owner Deliverable Milestones		0	03-Mar-25	03-Mar-25	
OFCI - Owner Deliverable Milestones		0	03-Mar-25	03-Mar-25	
Design Deliverables		400	05-Nov-24 A	05-Jun-26	
CON-3910	Project Re-Start 11/5/24	0	05-Nov-24 A		11/5/24
CON-3920	Issue BoD Report for Pricing	0	21-Feb-25 A		Issue BoD Report for Pricing
CON-3950	BoD - Cost Validation (HW & JED)	21	21-Feb-25 A	21-Mar-25 A	BoD - Cost Validation (HW & JED)
CON-3930	Issue Final BoD Report	0		21-Mar-25 A	Issue Final BoD Report
CON-4370	75% SD Set	0		27-Jun-25*	75% SD Set
CON-3940	100% SD Set	0		01-Aug-25*	100% SD Set
CON-4010	100% CD Drawing Package (ERP #1 - IPRC/CFA/Street Utilities / Grading / Soil	0		01-Aug-25*	100% CD Drawing Package (ERP #1 - IPRC/CFA/Street Utilities / Grading / Soil Retention)
CON-5010	***100% DD "Foundation Permit" (Civils, Utilities, MEP Underground, (Piers/Fo	0		26-Sep-25*	***100% DD "Foundation Permit" (Civils, Utilities, MEP Underground, (Piers/Foundations/Crawl/Slab), Building Elevations
CON-4390	75% DD Set	0		31-Oct-25*	75% DD Set
CON-4930	100% CD "Foundation Permit" (Civils, Utilities, MEP Underground, (Piers/Found	0		31-Oct-25*	100% CD "Foundation Permit" (Civils, Utilities, MEP Underground, (Piers/Foundations/Crawl/Slab), Building Elevations
CON-3970	100 % DD Set (ERP #3 and #4)	0		12-Dec-25*	100 % DD Set (ERP #3 and #4)
CON-4400	100% CD (ERP #2 - Utilities / Piers / Foundations / Elev Pits/ Gen Yard / Dock / E	0		12-Dec-25*	100% CD (ERP #2 - Utilities / Piers / Foundations / Elev Pits/ Gen Yard / Dock / Elevator / Major Equipment)
CON-4990	100% CD ERP #3 - (Concrete Superstructure / Core& Shell / MEP Mains	0		01-May-26*	100% CD ERP #3 - (Concrete Superstructure / Core& Shell / MEP Mains
CON-5000	100% CD ERP #4 - (Interior Fit-Out & Balance of Scope)	0		05-Jun-26*	100% CD ERP #4 - (Interior Fit-Out & Balance of Scope)
Cost Validations		223	21-Feb-25 A	16-Jan-26	
CON-5060	Program/Narrative Cost Validation (HW & JED)	1	21-Feb-25 A	04-Apr-25 A	Program/Narrative Cost Validation (HW & JED)
CON-3960	SD Cost Validation (HW & JED)	30	27-Jun-25	08-Aug-25	SD Cost Validation (HW & JED)
CON-4150	DD Cost Validation (HW & JED)	51	03-Nov-25	16-Jan-26	DD Cost Validation (HW & JED)
iGMP - JPS Funding Approval		333	27-Jun-25	20-Oct-26	
CON-4800	iGMP #1 - Utilities/Soil Reten./Earthwork/PRECON-Prefab & MEP Design Assi	20	27- Jun-25	25- Jul-25	iGMP #1 - Utilities/Soil Reten./Earthwork/PRECON-Prefab & MEP Design Assist /MEP U Foundations
CON-4580	iGMP #1 - JPS/Commissioner Approval (ERP #1 and ERP #2)	36	28- Jul-25	16-Sep-25	iGMP #1 - JPS/Commissioner Approval (ERP #1 and ERP #2)
CON-4780	iGMP #2 - JED Budget (ERP #3 - Concrete Superstructure / Core & Shell / MEP D	40	04-Aug-25	29- Sep-25	iGMP #2 - JED Budget (ERP #3 - Concrete Superstructure / Core & Shell / MEP Design Assist, ElevatorSubmittal $for ERP#4)
CON-4760	iGMP #2 - JPS/Commissioner Approval (ERP #3 - Concrete Superstructure / Core	44	30- Sep-25	02-Dec-25	iGMP #2 - JPS/Commissioner Approval (ERP #3 - Concrete Superstructure / Core & Shell / MEP Mains)
CON-4790	iGMP #3 - JED Budget (ERP #4 - Interior Fit-Out)	51	15-Dec-25	26- Feb-26	iGMP #3 - JED Budget (ERP #4 - Interior Fit-Out)
CON-4770	iGMP #3 - JPS/Commissioner Approval (ERP #4 - Interior Fit-Out)	50	27-Feb-26	07-May-26	iGMP #3 - JPS/Commissioner Approval (ERP #4 - Interior Fit-Out)
CON-5020	fGMP #4 - JED's fGMP Final	45	08-Jun-26	10-Aug-26	fGMP #4 - JED's fGMP Final
CON-5030	fGMP #4 - JPS Commissioner Approval	50	11-Aug-26	20-Oct-26	fGMP #4 - JPS Commissioner Approval
WPA - Trade Partner Bid/Selection		178	27- Jun-25	12-Mar-26	
CON-4850	#A- Price/Bid - Trade Partner Selection (Earthwork / Util / SoilRetention)	49	27-Jun-25	05- Sep-25	#A- Price/Bid - Trade Partner Selection (Earthwork / Util / SoilRetention)
CON-4840	#B - Price/Bid - Trade Partner Selection (Facade Design Assist / MEP Design Assis	45	04-Aug-25	06- Oct-25	#B - Price/Bid - Trade Partner Selection (Facade Design Assist / MEP Design Assist /Elevator / Major Equip.)
CON-4950	#A- BVR / NTP	10	08-Sep-25	19-Sep-25	#A- BVR / NTP
CON-5160	#C - Price/Bid - Trade Partner Selection (Concrete Package)	38	29-Sep-25	19- Nov-25	#C - Price/Bid - Trade Partner Selection (Concrete Package)
CON-4960	#B - BVR / NTP	10	07-Oct-25	20- Oct-25	#B - BVR / NTP
CON-5170	#C - BVR / NTP	10	20-Nov-25	05- Dec-25	#C - BVR / NTP
CON-4860	#D - Price/Bid - Trade Partner Selection - (Core/Shell and TI)	51	15-Dec-25	26-Feb-26	#D - Price/Bid - Trade Partner Selection - (Core/Shell and TI)
CON-4970	#D - BVR / NTP (Core/Shelland TI)	10	27-Feb-26	12-Mar-26	#D - BVR / NTP (Core/Shelland TI)
Permits		336	03-Mar-25	26-Jun-26	
CON-4880	Early Grading Permit (Starts Soil Retention @ Risk)	15	03-Mar-25	21- Mar-25	Early Grading Permit (Starts Soil Retention @ Risk)
CON-4890	Final Grading Permit - Civils, SWPPP, Drainage (Starts Utilities)	15	03-Mar-25	21-Mar-25	Final Grading Permit - Civils, SWPPP, Drainage (Starts Utilities)
CON-4940	IPRC/CFA	5	03-Mar-25	07- Mar-25	IPRC/CFA
CON-5050	Soil Retention Permit & Right of Way Easement	33	20-Oct-25	05-Dec-25	Soil Retention Permit & Right of Way Easement
CON-4900	Foundation Permit	15	03- Nov-25	21- Nov-25	Foundation Permit
CON-4910	Core & Shell Permit	15	04- May-26	22- May-26	Core & Shell Permit
CON-4920	TI Permit	15	08-Jun-26	26-Jun-26	TI Permit
Submittals		317	03-Mar-25	01-Jun-26	
Procurement		513	31- Mar-25	08- Apr-27	
Mobilization		10	08-Dec-25	19-Dec-25	
CON-3580	Mobilization/ Fence/ SWPPP	10	08-Dec-25	19-Dec-25	Mobilization/ Fence/ SWPPP
Site Utilities		270	03- Mar-25	25- Mar-26	
Hoisting		382	09-Feb-26	10-Aug-27	
CON-7370	FRP Hoist Pad	5	23-Sep-26	29-Sep-26	FRP Hoist Pad
CON-7340	Set Man & Material Dual Hoist	5	09-Oct-26	15- Oct-26	Set Man & Material Dual Hoist
CON-7350	Dual Hoist Operational	204	16-Oct-26	06- Aug-27	Dual Hoist Operational
CON-7360	Remove Dual Hoist	2	09-Aug-27	10- Aug-27	Remove Dual Hoist
CON-7380	Drilled Piers - Tower Crane	5	09-Feb-26	13-Feb-26	Drilled Piers - Tower Crane
CON-7390	FRP Footings -Tower Crane	2	04- May-26	05- May-26	FRP Footings -Tower Crane
CON-7400	Set Tower Crane	5	06-May-26	12- May-26	Set Tower Crane

Remaining Level of Effort
Remaining Work
Milestone
Actual Level of Effort
Critical Remaining Work
Actual Work

Data Date: 03-Mar-25 / Run Date: 29-Sep-25

JPS Health - MOB - Outpatient Center - Master
J.E. Dunn Construction Company
REMAINING WORK

JE DUNN®

CON-7410	Tower Crane Operational	263	13- May-26	26- May-27	Tower Crane Operational
CON-7420	Remove Tower Crane	2	27-May-27	28-May-27	Remove Tower Crane
ERP #1/#2 (Construction with Foundation Permit)		137	22-Dec-25	07-Jul-26	
CON-3640	Mass Excavation / Rough Grade / Soil Retention / Soil Remediation	27	22-Dec-25	30- Jan-26	Mass Excavation / Rough Grade / Soil Retention / Soil Remediation
CON-1410	Earthwork & Subgrade Prep	5	02-Feb-26	06- Feb-26	Earthwork & Subgrade Prep
CON-1430	Piers	50	09-Feb-26	17- Apr-26	Piers
CON-5200	Pier Caps	25	30-Mar-26	01-May-26	Pier Caps
CON-5240	Waterproofing - Volclay @ Shoring	15	20-Apr-26	08- May-26	Waterproofing - Volclay @ Shoring
CON-1440	Perimeter Wall / GB	25	27- Apr-26	01- Jun-26	Perimeter Wall / GB
CON-5190	Sub Soil Drainage, Crawl Space Drains, and Ejector Pits - Below Mud Slab	15	26- May-26	15- Jun-26	Sub Soil Drainage, Crawl Space Drains, and Ejector Pits - Below Mud Slab
CON-4480	SOV - Mechanical Room	20	02- Jun-26	29-Jun-26	SOV - Mechanical Room
CON-4490	Gravel @ Crawl Space	10	16- Jun-26	29-Jun-26	Gravel @ Crawl Space
CON-5210	Mudslab	5	30-Jun-26	07- Jul-26	Mudslab
Structure / Core & Shell		201	08- Jul-26	22-Apr-27	
CON-5220	Level 1 - Crawlspace	18	08-Jul-26	31- Jul-26	Level 1 - Crawlspace
CON-1450	Retaining Walls - Level 1 to Level 2	15	24-Jul-26	13- Aug-26	Retaining Walls - Level 1 to Level 2
CON-1460	Level 2 - Concrete	15	14- Aug-26	03- Sep-26	Level 2 - Concrete
CON-1470	Level 3 - Concrete	12	04-Sep-26	22-Sep-26	Level 3 - Concrete
CON-1480	Level 4 - Concrete	12	23- Sep-26	08-Oct-26	Level 4 - Concrete
CON-1490	Level 5 - Concrete	12	09-Oct-26	26-Oct-26	Level 5 - Concrete
CON-4500	Crawl Space - Remove Reshores	30	09-Oct-26	19- Nov-26	Crawl Space - Remove Reshores
CON-1500	Level 6 - Concrete	12	27- Oct-26	11- Nov-26	Level 6 - Concrete
CON-1510	Level 7 - Concrete	10	12- Nov-26	25-Nov-26	Level 7 - Concrete
CON-1520	Level 8 - Concrete	12	30-Nov-26	15- Dec-26	Level 8 - Concrete
CON-3550	Level 9 - Concrete	12	16- Dec-26	04- Jan-27	Level 9 - Concrete
CON-1530	Level 10/Roof - Concrete	12	05-Jan-27	21- Jan-27	Level 10/Roof - Concrete
CON-3850	Level 2/3 Pedestrian Pathway to Parking Garage "Garage Access"	65	22-Jan-27	22- Apr-27	Level 2/3 Pedestrian Pathway to Parking Garage "Garage Access"
CON-5230	Penthouse Concrete & Roof Columns	10	22-Jan-27	04-Feb-27	Penthouse Concrete & Roof Columns
CON-12620	Cure Roof - 365 Calendar	30	22-Jan-27	20- Feb-27	Cure Roof - 365 Calendar
CON-3740	Install Main Roof	20	15-Apr-27	12- May-27	Install Main Roof
CON-3880	Man-Hoist Building Facade Enclosure	20	11-Aug-27	08-Sep-27	Man-Hoist Building Facade Enclosure
Pre-fab Panels		80	04-Dec-26	30-Mar-27	
CON-12530	L1 Prefab Panels - Non-Curtainwall Section	6	04-Dec-26	11- Dec-26	L1 Prefab Panels - Non-Curtainwall Section
CON-12540	L2 Prefab Panels - Non-Curtainwall Section	10	14-Dec-26	28- Dec-26	L2 Prefab Panels - Non-Curtainwall Section
CON-12550	L3 Prefab Panels - Non-Curtainwall Section	8	29-Dec-26	08-Jan-27	L3 Prefab Panels - Non-Curtainwall Section
CON-12560	L4 Prefab Panels - Non-Curtainwall Section	8	11-Jan-27	21- Jan-27	L4 Prefab Panels - Non-Curtainwall Section
CON-12570	L5 Prefab Panels - Non-Curtainwall Section	8	22-Jan-27	02- Feb-27	L5 Prefab Panels - Non-Curtainwall Section
CON-12580	L6 Prefab Panels - Non-Curtainwall Section	8	03-Feb-27	12- Feb-27	L6 Prefab Panels - Non-Curtainwall Section
CON-12590	L7 Prefab Panels - Non-Curtainwall Section	8	15-Feb-27	24- Feb-27	L7 Prefab Panels - Non-Curtainwall Section
CON-12600	L8 Prefab Panels - Non-Curtainwall Section	8	25-Feb-27	08-Mar-27	L8 Prefab Panels - Non-Curtainwall Section
CON-12610	L9 Prefab Panels - Non-Curtainwall Section	8	09-Mar-27	18-Mar-27	L9 Prefab Panels - Non-Curtainwall Section
CON-1540	Penthouse / Roof Prefab Panels - Non-Curtainwall Section	8	19-Mar-27	30-Mar-27	Penthouse / Roof Prefab Panels - Non-Curtainwall Section
CON-12670	L1 Prefab Panels - Curtainwall Section	5	14-Dec-26	18-Dec-26	L1 Prefab Panels - Curtainwall Section
CON-12680	L2, L3 Prefab Panels - Curtainwall Section	5	11-Jan-27	15-Jan-27	L2, L3 Prefab Panels - Curtainwall Section
CON-12690	L4, L5 Prefab Panels - Curtainwall Section	5	19-Jan-27	25- Jan-27	L4, L5 Prefab Panels - Curtainwall Section
CON-12700	L6, L7 Prefab Panels - Curtainwall Section	5	26-Jan-27	01-Feb-27	L6, L7 Prefab Panels - Curtainwall Section
CON-12710	L8, L9 & Penthouse Roof Prefab Panels - Curtainwall Section	5	02-Feb-27	08-Feb-27	L8, L9 & Penthouse Roof Prefab Panels - Curtainwall Section
CON-12720	North Stairwell - Curtainwall Section	7	09-Feb-27	17-Feb-27	North Stairwell - Curtainwall Section
CON-12730	South Stairwell - Curtainwall Section	7	09-Feb-27	17-Feb-27	South Stairwell - Curtainwall Section
Penthouse Roof		40	18-Feb-27	14- Apr-27	
CON-3870	Penthouse / MEP Roof Items / Metal Screen Wall / Davits	40	18-Feb-27	14-Apr-27	Penthouse / MEP Roof Items / Metal Screen Wall / Davits

Remaining Level of Effort
Actual Level of Effort
Critical Remaining Work
Actual Work

Remaining Work
Milestone

Data Date: 03-Mar-25 / Run Date: 29-Sep-25

JPS Health - MOB - Outpatient Center - Master
J.E. Dunn Construction Company
REMAINING WORK

JE DUNN®

Attachment 8 – List of Key Personnel

JPS Health Medical Office Building
JE Dunn Key Personnel

TEAM MEMBER	ROLE	EMAIL	PHONE
Matt Robben	Project Executive	matt.robben@jedunn.com	214-205-4580
Chuck Sloma	Sr. Precon Manager	chuck.sloma@jedunn.com	214-551-2039
Patrick Caskey	Preconstruction Manager	patrickcaskey@jedunn.com	317-306-6390
Drew Lawson	Project Manager 2	drew.lawson@jedunn.com	972-689-8855
Robert Wait	Sr. Superintendant	robert.wait@jedunn.com	737-320-9814
Jacob Shannon	Sr. Project Engineer	jacob.shannon@jedunn.com	469-324-4931
Angela Hart	Project Coordinator	angela.hart@jedunn.com	254-500-4200

Attachment 9 – List of Drawings and Specifications

(Attached)

Date	Sheet	Description	Description
8/1/2025	X-001	COVER SHEET	Hoefer Welker 100% SD
8/1/2025	G-000	DRAWING INDEX	Hoefer Welker 100% SD
8/1/2025	G-001	LIFE SAFETY CODE ANALYSIS	Hoefer Welker 100% SD
8/1/2025	G-002	LIFE SAFETY CODE ANALYSIS	Hoefer Welker 100% SD
8/1/2025	G-003	LIFE SAFETY CODE ANALYSIS	Hoefer Welker 100% SD
8/1/2025	G-011	GENERAL INFORMATION	Hoefer Welker 100% SD
8/1/2025	G-012	PROJECT INFORMATION	Hoefer Welker 100% SD
8/1/2025	G-100	LIFE SAFETY SITE PLAN	Hoefer Welker 100% SD
8/1/2025	G-101	LEVEL 01 - LIFE SAFETY PLAN	Hoefer Welker 100% SD
8/1/2025	G-102	LEVEL 02 - LIFE SAFETY PLAN	Hoefer Welker 100% SD
8/1/2025	G-103	LEVEL 03 - LIFE SAFETY PLAN	Hoefer Welker 100% SD
8/1/2025	G-104	LEVEL 04 - LIFE SAFETY PLAN	Hoefer Welker 100% SD
8/1/2025	G-105	LEVEL 05 - LIFE SAFETY PLAN	Hoefer Welker 100% SD
8/1/2025	G-106	LEVEL 06 - LIFE SAFETY PLAN	Hoefer Welker 100% SD
8/1/2025	G-107	LEVEL 07 - LIFE SAFETY PLAN	Hoefer Welker 100% SD
8/1/2025	G-108	LEVEL 08 - LIFE SAFETY PLAN	Hoefer Welker 100% SD
8/1/2025	G-109	LEVEL 09 - LIFE SAFETY PLAN	Hoefer Welker 100% SD
8/1/2025	G-110	LIFE SAFETY PENTHOUSE PLAN	Hoefer Welker 100% SD
8/1/2025	L-0.00	GENERAL LANDSCAPE NOTES	Hoefer Welker 100% SD
8/1/2025	L-1.01	PLANTING PLAN - LEVEL 01	Hoefer Welker 100% SD
8/1/2025	L-1.02	LANDSCAPE PLAN - LEVEL 02	Hoefer Welker 100% SD
8/1/2025	L-2.01	IRRIGATION PLAN - LEVEL 01	Hoefer Welker 100% SD
8/1/2025	L-2.02	IRRIGATION PLAN - LEVEL 02	Hoefer Welker 100% SD
8/1/2025	S-000	STRUCTURAL COVER PAGE	Hoefer Welker 100% SD
8/1/2025	S-001	GENERAL NOTES	Hoefer Welker 100% SD
8/1/2025	S-002	GENERAL NOTES	Hoefer Welker 100% SD
8/1/2025	S-003	STRUCTURAL SYMBOLS AND ANNOTATIONS	Hoefer Welker 100% SD
8/1/2025	S-004	CLASS OF CONCRETE MATRIX	Hoefer Welker 100% SD
8/1/2025	S-005	CONCRETE COVER DETAILS	Hoefer Welker 100% SD
8/1/2025	S-006	REINFORCEMENT DEVELOPMENT LENGTH TABLES	Hoefer Welker 100% SD
8/1/2025	S-007	REINFORCEMENT DEVELOPMENT LENGTH TABLES	Hoefer Welker 100% SD
8/1/2025	S-008	QUANTITY AND MISCELLANEOUS NOTES	Hoefer Welker 100% SD
8/1/2025	S-100	CRAWL SPACE - OVERALL PLAN	Hoefer Welker 100% SD
8/1/2025	S-100A	CRAWL SPACE - AREA A	Hoefer Welker 100% SD
8/1/2025	S-100B	CRAWL SPACE - AREA B	Hoefer Welker 100% SD
8/1/2025	S-101	FIRST FLOOR - OVERALL PLAN	Hoefer Welker 100% SD
8/1/2025	S-101A	FIRST FLOOR - AREA A	Hoefer Welker 100% SD
8/1/2025	S-101B	FIRST FLOOR - AREA B	Hoefer Welker 100% SD
8/1/2025	S-102	SECOND FLOOR - OVERALL PLAN	Hoefer Welker 100% SD
8/1/2025	S-102A	SECOND FLOOR - AREA A	Hoefer Welker 100% SD
8/1/2025	S-102B	SECOND FLOOR - AREA B	Hoefer Welker 100% SD
8/1/2025	S-103	THIRD FLOOR - OVERALL PLAN	Hoefer Welker 100% SD
8/1/2025	S-103A	THIRD FLOOR - AREA A	Hoefer Welker 100% SD
8/1/2025	S-103B	THIRD FLOOR - AREA B	Hoefer Welker 100% SD
8/1/2025	S-104	FOURTH FLOOR - OVERALL PLAN	Hoefer Welker 100% SD
8/1/2025	S-104A	FOURTH FLOOR - AREA A	Hoefer Welker 100% SD
8/1/2025	S-104B	FOURTH FLOOR - AREA B	Hoefer Welker 100% SD
8/1/2025	S-105	FIFTH FLOOR - OVERALL PLAN	Hoefer Welker 100% SD
8/1/2025	S-105A	FIFTH FLOOR - AREA A	Hoefer Welker 100% SD

8/1/2025	S-105B	FIFTH FLOOR - AREA B	Hoefer Welker 100% SD
8/1/2025	S-106	SIXTH FLOOR - OVERALL PLAN	Hoefer Welker 100% SD
8/1/2025	S-106A	SIXTH FLOOR - AREA A	Hoefer Welker 100% SD
8/1/2025	S-106B	SIXTH FLOOR - AREA B	Hoefer Welker 100% SD
8/1/2025	S-107	SEVENTH FLOOR - OVERALL PLAN	Hoefer Welker 100% SD
8/1/2025	S-107A	SEVENTH FLOOR - AREA A	Hoefer Welker 100% SD
8/1/2025	S-107B	SEVENTH FLOOR - AREA B	Hoefer Welker 100% SD
8/1/2025	S-108	EIGHTH FLOOR - OVERALL PLAN	Hoefer Welker 100% SD
8/1/2025	S-108A	EIGHTH FLOOR - AREA A	Hoefer Welker 100% SD
8/1/2025	S-108B	EIGHTH FLOOR - AREA B	Hoefer Welker 100% SD
8/1/2025	S-109	NINTH FLOOR - OVERALL PLAN	Hoefer Welker 100% SD
8/1/2025	S-109A	NINTH FLOOR - AREA A	Hoefer Welker 100% SD
8/1/2025	S-109B	NINTH FLOOR - AREA B	Hoefer Welker 100% SD
8/1/2025	S-110	ROOF/PENTHOUSE - OVERALL PLAN	Hoefer Welker 100% SD
8/1/2025	S-110A	ROOF/PENTHOUSE - AREA A	Hoefer Welker 100% SD
8/1/2025	S-110B	ROOF/PENTHOUSE - AREA B	Hoefer Welker 100% SD
8/1/2025	S-111	PENTHOUSE ROOF - OVERALL PLAN	Hoefer Welker 100% SD
8/1/2025	S-111B	PENTHOUSE ROOF - AREA B	Hoefer Welker 100% SD
8/1/2025	S-301	BUILDING SECTIONS	Hoefer Welker 100% SD
8/1/2025	S-302	BUILDING SECTIONS	Hoefer Welker 100% SD
8/1/2025	S-303	BUILDING SECTIONS	Hoefer Welker 100% SD
8/1/2025	S-401	ENLARGED FRAMING PLAN - LANDSCAPE DECK	Hoefer Welker 100% SD
8/1/2025	S-501	TYPICAL FOUNDATION DETAILS	Hoefer Welker 100% SD
8/1/2025	S-502	TYPICAL FOUNDATION DETAILS	Hoefer Welker 100% SD
8/1/2025	S-503	TYPICAL FOUNDATION DETAILS	Hoefer Welker 100% SD
8/1/2025	S-504	TYPICAL FOUNDATION DETAILS	Hoefer Welker 100% SD
8/1/2025	S-505	FOUNDATION SECTIONS	Hoefer Welker 100% SD
8/1/2025	AS101	OVERALL SITE PLAN	Hoefer Welker 100% SD
8/1/2025	AS101A	ENLARGED SITE PLAN - STREET ENTRY - E	Hoefer Welker 100% SD
8/1/2025	AS101B	ENLARGED SITE PLAN - STREET ENTRY - N	Hoefer Welker 100% SD
8/1/2025	AS101C	ENLARGED SITE PLAN - LOADING DOCK - W	Hoefer Welker 100% SD
8/1/2025	AS101D	ENLARGED SITE PLAN - LANDSCAPE DECK - W	Hoefer Welker 100% SD
8/1/2025	AS401	ENLARGED SITE PLAN - GENERATOR YARD	Hoefer Welker 100% SD
8/1/2025	A-100	CRAWL SPACE - OVERALL FLOOR PLAN	Hoefer Welker 100% SD
8/1/2025	A-101	LEVEL 01 - OVERALL FLOOR PLAN	Hoefer Welker 100% SD
8/1/2025	A-101A-D	LEVEL 01 - DIMENSION PLAN - AREA A	Hoefer Welker 100% SD
8/1/2025	A-101A-F	LEVEL 01 - FLOOR PLAN - AREA A	Hoefer Welker 100% SD
8/1/2025	A-101B-D	LEVEL 01 - DIMENSION PLAN - AREA B	Hoefer Welker 100% SD
8/1/2025	A-101B-F	LEVEL 01 - FLOOR PLAN - AREA B	Hoefer Welker 100% SD
8/1/2025	A-102	LEVEL 02 - OVERALL FLOOR PLAN	Hoefer Welker 100% SD
8/1/2025	A-102A-D	LEVEL 02 - DIMENSION PLAN - AREA A	Hoefer Welker 100% SD
8/1/2025	A-102A-F	LEVEL 02 - FLOOR PLAN - AREA A	Hoefer Welker 100% SD
8/1/2025	A-102B-D	LEVEL 02 - DIMENSION PLAN - AREA B	Hoefer Welker 100% SD
8/1/2025	A-102B-F	LEVEL 02 - FLOOR PLAN - AREA B	Hoefer Welker 100% SD
8/1/2025	A-103	LEVEL 03 - OVERALL FLOOR PLAN	Hoefer Welker 100% SD
8/1/2025	A-103A-D	LEVEL 03 - DIMENSION PLAN - AREA A	Hoefer Welker 100% SD
8/1/2025	A-103A-F	LEVEL 03 - FLOOR PLAN - AREA A	Hoefer Welker 100% SD
8/1/2025	A-103B-D	LEVEL 03 - DIMENSION PLAN - AREA B	Hoefer Welker 100% SD
8/1/2025	A-103B-F	LEVEL 03 - FLOOR PLAN - AREA B	Hoefer Welker 100% SD
8/1/2025	A-104	LEVEL 04 - OVERALL FLOOR PLAN	Hoefer Welker 100% SD
8/1/2025	A-104A-D	LEVEL 04 - DIMENSION PLAN - AREA A	Hoefer Welker 100% SD

8/1/2025	A-104A-F	LEVEL 04 - FLOOR PLAN - AREA A	Hoefer Welker 100% SD
8/1/2025	A-104B-D	LEVEL 04 - DIMENSION PLAN - AREA B	Hoefer Welker 100% SD
8/1/2025	A-104B-F	LEVEL 04 - FLOOR PLAN - AREA B	Hoefer Welker 100% SD
8/1/2025	A-105	LEVEL 05 - OVERALL FLOOR PLAN	Hoefer Welker 100% SD
8/1/2025	A-105A-D	LEVEL 05 - DIMENSION PLAN - AREA A	Hoefer Welker 100% SD
8/1/2025	A-105A-F	LEVEL 05 - FLOOR PLAN - AREA A	Hoefer Welker 100% SD
8/1/2025	A-105B-D	LEVEL 05 - DIMENSION PLAN - AREA B	Hoefer Welker 100% SD
8/1/2025	A-105B-F	LEVEL 05 - FLOOR PLAN - AREA B	Hoefer Welker 100% SD
8/1/2025	A-106	LEVEL 06 - OVERALL FLOOR PLAN	Hoefer Welker 100% SD
8/1/2025	A-106A-D	LEVEL 06 - DIMENSION PLAN - AREA A	Hoefer Welker 100% SD
8/1/2025	A-106A-F	LEVEL 06 - FLOOR PLAN - AREA A	Hoefer Welker 100% SD
8/1/2025	A-106B-D	LEVEL 06 - DIMENSION PLAN - AREA B	Hoefer Welker 100% SD
8/1/2025	A-106B-F	LEVEL 06 - FLOOR PLAN - AREA B	Hoefer Welker 100% SD
8/1/2025	A-107	LEVEL 07 - OVERALL FLOOR PLAN	Hoefer Welker 100% SD
8/1/2025	A-107A-D	LEVEL 07 - DIMENSION PLAN - AREA A	Hoefer Welker 100% SD
8/1/2025	A-107A-F	LEVEL 07 - FLOOR PLAN - AREA A	Hoefer Welker 100% SD
8/1/2025	A-107B-D	LEVEL 07 - DIMENSION PLAN - AREA B	Hoefer Welker 100% SD
8/1/2025	A-107B-F	LEVEL 07 - FLOOR PLAN - AREA B	Hoefer Welker 100% SD
8/1/2025	A-108	LEVEL 08 - OVERALL FLOOR PLAN	Hoefer Welker 100% SD
8/1/2025	A-108A-D	LEVEL 08 - DIMENSION PLAN - AREA A	Hoefer Welker 100% SD
8/1/2025	A-108A-F	LEVEL 08 - FLOOR PLAN - AREA A	Hoefer Welker 100% SD
8/1/2025	A-108B-D	LEVEL 08 - DIMENSION PLAN - AREA B	Hoefer Welker 100% SD
8/1/2025	A-108B-F	LEVEL 08 - FLOOR PLAN - AREA B	Hoefer Welker 100% SD
8/1/2025	A-109	LEVEL 09 - OVERALL FLOOR PLAN	Hoefer Welker 100% SD
8/1/2025	A-109A-D	LEVEL 09 - DIMENSION PLAN - AREA A	Hoefer Welker 100% SD
8/1/2025	A-109A-F	LEVEL 09 - FLOOR PLAN - AREA A	Hoefer Welker 100% SD
8/1/2025	A-109B-D	LEVEL 09 - DIMENSION PLAN - AREA B	Hoefer Welker 100% SD
8/1/2025	A-109B-F	LEVEL 09 - FLOOR PLAN - AREA B	Hoefer Welker 100% SD
8/1/2025	A-110	OVERALL FLOOR PLAN - PENTHOUSE LEVEL	Hoefer Welker 100% SD
8/1/2025	A-110A-D	FLOOR PLAN - PENTHOUSE DIMENSION PLAN AREA A	Hoefer Welker 100% SD
8/1/2025	A-110A-F	FLOOR PLAN - PENTHOUSE LEVEL AREA A	Hoefer Welker 100% SD
8/1/2025	A-110B-D	FLOOR PLAN - PENTHOUSE DIMENSION PLAN AREA B	Hoefer Welker 100% SD
8/1/2025	A-110B-F	FLOOR PLAN - PENTHOUSE LEVEL AREA B	Hoefer Welker 100% SD
8/1/2025	A-111	ROOF PLAN	Hoefer Welker 100% SD
8/1/2025	A-111A	ROOF PLAN-AREA A	Hoefer Welker 100% SD
8/1/2025	A-111B	ROOF PLAN-AREA B	Hoefer Welker 100% SD
8/1/2025	A-201	EXTERIOR ELEVATIONS	Hoefer Welker 100% SD
8/1/2025	A-202	EXTERIOR ELEVATIONS	Hoefer Welker 100% SD
8/1/2025	A-203	EXTERIOR ELEVATIONS - PREFAB PANELS	Hoefer Welker 100% SD
8/1/2025	A-204	EXTERIOR ELEVATIONS - PREFAB PANELS	Hoefer Welker 100% SD
8/1/2025	A-301	BUILDING SECTIONS	Hoefer Welker 100% SD
8/1/2025	A-302	BUILDING SECTIONS	Hoefer Welker 100% SD
8/1/2025	A-321	WALL SECTIONS	Hoefer Welker 100% SD
8/1/2025	A-322	WALL SECTIONS	Hoefer Welker 100% SD
8/1/2025	A-323	WALL SECTIONS	Hoefer Welker 100% SD
8/1/2025	A-324	WALL SECTIONS	Hoefer Welker 100% SD
8/1/2025	AC101	OVERALL LEVEL 01 - RCP	Hoefer Welker 100% SD
8/1/2025	AC101A	LEVEL 01 - RCP - AREA A	Hoefer Welker 100% SD
8/1/2025	AC101B	LEVEL 01 - RCP - AREA B	Hoefer Welker 100% SD
8/1/2025	AC102	OVERALL LEVEL 02 - RCP	Hoefer Welker 100% SD
8/1/2025	AC102A	LEVEL 02 - RCP - AREA A	Hoefer Welker 100% SD

8/1/2025	AC102B	LEVEL 02 - RCP-AREA B	Hoefer Welker 100% SD
8/1/2025	AC103	OVERALL LEVEL 03 - RCP	Hoefer Welker 100% SD
8/1/2025	AC103A	LEVEL 03 - RCP - AREA A	Hoefer Welker 100% SD
8/1/2025	AC103B	LEVEL 03 - RCP - AREA B	Hoefer Welker 100% SD
8/1/2025	AC104	OVERALL LEVEL 04 - RCP	Hoefer Welker 100% SD
8/1/2025	AC104A	LEVEL 04 - RCP - AREA A	Hoefer Welker 100% SD
8/1/2025	AC104B	LEVEL 04 - RCP-AREA B	Hoefer Welker 100% SD
8/1/2025	AC105	OVERALL LEVEL 05 - RCP	Hoefer Welker 100% SD
8/1/2025	AC105A	LEVEL 05 - RCP - AREA A	Hoefer Welker 100% SD
8/1/2025	AC105B	LEVEL 05 - RCP - AREA B	Hoefer Welker 100% SD
8/1/2025	AC106	OVERALL LEVEL 06 - RCP	Hoefer Welker 100% SD
8/1/2025	AC106A	LEVEL 06 - RCP - AREA A	Hoefer Welker 100% SD
8/1/2025	AC106B	LEVEL 06 - RCP - AREA B	Hoefer Welker 100% SD
8/1/2025	AC107	OVERALL LEVEL 07 - RCP	Hoefer Welker 100% SD
8/1/2025	AC107A	LEVEL 07 - RCP - AREA A	Hoefer Welker 100% SD
8/1/2025	AC107B	LEVEL 07 - RCP - AREA B	Hoefer Welker 100% SD
8/1/2025	AC108	OVERALL LEVEL 08 - RCP	Hoefer Welker 100% SD
8/1/2025	AC108A	LEVEL 08 - RCP - AREA A	Hoefer Welker 100% SD
8/1/2025	AC108B	LEVEL 08 - RCP - AREA B	Hoefer Welker 100% SD
8/1/2025	AC109	OVERALL LEVEL 09 & PENTHOUSE - RCP	Hoefer Welker 100% SD
8/1/2025	AC109A	LEVEL 09 & PENTHOUSE - RCP - AREA A	Hoefer Welker 100% SD
8/1/2025	AC109B	LEVEL 09 & PENTHOUSE - RCP - AREA B	Hoefer Welker 100% SD
8/1/2025	AI101	OVERALL LEVEL 01 - FINISH PLAN	Hoefer Welker 100% SD
8/1/2025	AI101A	LEVEL 01 - FINISH PLAN - AREA A	Hoefer Welker 100% SD
8/1/2025	AI101B	LEVEL 01 - FINISH PLAN - AREA B	Hoefer Welker 100% SD
8/1/2025	AI102	OVERALL LEVEL 02 - FINISH PLAN	Hoefer Welker 100% SD
8/1/2025	AI102A	LEVEL 02 - FINISH PLAN - AREA A	Hoefer Welker 100% SD
8/1/2025	AI102B	LEVEL 02 - FINISH PLAN - AREA B	Hoefer Welker 100% SD
8/1/2025	AI103	OVERALL LEVEL 03 - FINISH PLAN	Hoefer Welker 100% SD
8/1/2025	AI103A	LEVEL 03 - FINISH PLAN - AREA A	Hoefer Welker 100% SD
8/1/2025	AI103B	LEVEL 03 - FINISH PLAN - AREA B	Hoefer Welker 100% SD
8/1/2025	AI104	OVERALL LEVEL 04 - FINISH PLAN	Hoefer Welker 100% SD
8/1/2025	AI104A	LEVEL 04 - FINISH PLAN - AREA A	Hoefer Welker 100% SD
8/1/2025	AI104B	LEVEL 04 - FINISH PLAN - AREA B	Hoefer Welker 100% SD
8/1/2025	AI105	OVERALL LEVEL 05 - FINISH PLAN	Hoefer Welker 100% SD
8/1/2025	AI105A	LEVEL 05 - FINISH PLAN - AREA A	Hoefer Welker 100% SD
8/1/2025	AI105B	LEVEL 05 - FINISH PLAN - AREA B	Hoefer Welker 100% SD
8/1/2025	AI106	OVERALL LEVEL 06 - FINISH PLAN	Hoefer Welker 100% SD
8/1/2025	AI106A	LEVEL 06 - FINISH PLAN - AREA A	Hoefer Welker 100% SD
8/1/2025	AI106B	LEVEL 06 - FINISH PLAN - AREA B	Hoefer Welker 100% SD
8/1/2025	AI107	OVERALL LEVEL 07 - FINISH PLAN	Hoefer Welker 100% SD
8/1/2025	AI107A	LEVEL 07 - FINISH PLAN - AREA A	Hoefer Welker 100% SD
8/1/2025	AI107B	LEVEL 07 - FINISH PLAN - AREA B	Hoefer Welker 100% SD
8/1/2025	AI108	OVERALL LEVEL 08 - FINISH PLAN	Hoefer Welker 100% SD
8/1/2025	AI108A	LEVEL 08 - FINISH PLAN - AREA A	Hoefer Welker 100% SD
8/1/2025	AI108B	LEVEL 08 - FINISH PLAN - AREA B	Hoefer Welker 100% SD
8/1/2025	AI109	OVERALL LEVEL 09 - FINISH PLAN	Hoefer Welker 100% SD
8/1/2025	AI109A	LEVEL 09 - FINISH PLAN - AREA A	Hoefer Welker 100% SD
8/1/2025	AI109B	LEVEL 09 - FINISH PLAN - AREA B	Hoefer Welker 100% SD
8/1/2025	AI601	FINISH LEGEND AND SCHEDULE	Hoefer Welker 100% SD
8/1/2025	FP-001	FIRE PROTECTION LEGEND AND GENERAL NOTES	Hoefer Welker 100% SD

8/1/2025	FP-101A	LEVEL 01 - FIRE PROTECTION PLAN - AREA A	Hoefer Welker 100% SD
8/1/2025	FP-101B	LEVEL 01 - FIRE PROTECTION PLAN - AREA B	Hoefer Welker 100% SD
8/1/2025	FP-102A	LEVEL 02 - FIRE PROTECTION PLAN - AREA A	Hoefer Welker 100% SD
8/1/2025	FP-102B	LEVEL 02 - FIRE PROTECTION PLAN - AREA B	Hoefer Welker 100% SD
8/1/2025	FP-103A	LEVEL 03 - FIRE PROTECTION PLAN - AREA A	Hoefer Welker 100% SD
8/1/2025	FP-103B	LEVEL 03 - FIRE PROTECTION PLAN - AREA B	Hoefer Welker 100% SD
8/1/2025	FP-104A	LEVEL 04 - FIRE PROTECTION PLAN - AREA A	Hoefer Welker 100% SD
8/1/2025	FP-104B	LEVEL 04 - FIRE PROTECTION PLAN - AREA B	Hoefer Welker 100% SD
8/1/2025	FP-105A	LEVEL 05 - FIRE PROTECTION PLAN - AREA A	Hoefer Welker 100% SD
8/1/2025	FP-105B	LEVEL 05 - FIRE PROTECTION PLAN - AREA B	Hoefer Welker 100% SD
8/1/2025	FP-106A	LEVEL 06 - FIRE PROTECTION PLAN - AREA A	Hoefer Welker 100% SD
8/1/2025	FP-106B	LEVEL 06 - FIRE PROTECTION PLAN - AREA B	Hoefer Welker 100% SD
8/1/2025	FP-107A	LEVEL 07 - FIRE PROTECTION PLAN - AREA A	Hoefer Welker 100% SD
8/1/2025	FP-107B	LEVEL 07 - FIRE PROTECTION PLAN - AREA B	Hoefer Welker 100% SD
8/1/2025	FP-108A	LEVEL 08 - FIRE PROTECTION PLAN - AREA A	Hoefer Welker 100% SD
8/1/2025	FP-108B	LEVEL 08 - FIRE PROTECTION PLAN - AREA B	Hoefer Welker 100% SD
8/1/2025	FP-109A	LEVEL 09 - FIRE PROTECTION PLAN - AREA A	Hoefer Welker 100% SD
8/1/2025	FP-109B	LEVEL 09 - FIRE PROTECTION PLAN - AREA B	Hoefer Welker 100% SD
8/1/2025	FP-110A	PENTHOUSE - FIRE PROTECTION PLAN - AREA A	Hoefer Welker 100% SD
8/1/2025	FP-110B	PENTHOUSE - FIRE PROTECTION PLAN - AREA B	Hoefer Welker 100% SD
8/1/2025	FP-700	FARS RISER DIAGRAM	Hoefer Welker 100% SD
8/1/2025	FP-701	FIRE PROTECTION RISER DIAGRAM	Hoefer Welker 100% SD
8/1/2025	FP-801	FIRE PROTECTION DETAILS	Hoefer Welker 100% SD
8/1/2025	P-001	PLUMBING LEGEND, GENERAL NOTES AND SPECIFICATIONS	Hoefer Welker 100% SD
8/1/2025	P-002	PLUMBING SCHEDULES	Hoefer Welker 100% SD
8/1/2025	P-100A	CRAWLSPACE PLUMBING PLAN - AREA A	Hoefer Welker 100% SD
8/1/2025	P-100B	CRAWLSPACE PLUMBING PLAN - AREA B	Hoefer Welker 100% SD
8/1/2025	P-101A	LEVEL 01 - PLUMBING PLAN - AREA A	Hoefer Welker 100% SD
8/1/2025	P-101B	LEVEL 01 - PLUMBING PLAN - AREA B	Hoefer Welker 100% SD
8/1/2025	P-102A	LEVEL 02 - PLUMBING PLAN - AREA A	Hoefer Welker 100% SD
8/1/2025	P-102B	LEVEL 02 - PLUMBING PLAN - AREA B	Hoefer Welker 100% SD
8/1/2025	P-103A	LEVEL 03 - PLUMBING PLAN - AREA A	Hoefer Welker 100% SD
8/1/2025	P-103B	LEVEL 03 - PLUMBING PLAN - AREA B	Hoefer Welker 100% SD
8/1/2025	P-104A	LEVEL 04 - PLUMBING PLAN - AREA A	Hoefer Welker 100% SD
8/1/2025	P-104B	LEVEL 04 - PLUMBING PLAN - AREA B	Hoefer Welker 100% SD
8/1/2025	P-105A	LEVEL 05 - PLUMBING PLAN - AREA A	Hoefer Welker 100% SD
8/1/2025	P-105B	LEVEL 05 - PLUMBING PLAN - AREA B	Hoefer Welker 100% SD
8/1/2025	P-106A	LEVEL 06 - PLUMBING PLAN - AREA A	Hoefer Welker 100% SD
8/1/2025	P-106B	LEVEL 06 - PLUMBING PLAN - AREA B	Hoefer Welker 100% SD
8/1/2025	P-107A	LEVEL 07 - PLUMBING PLAN - AREA A	Hoefer Welker 100% SD
8/1/2025	P-107B	LEVEL 07 - PLUMBING PLAN - AREA B	Hoefer Welker 100% SD
8/1/2025	P-108A	LEVEL 08 - PLUMBING PLAN - AREA A	Hoefer Welker 100% SD
8/1/2025	P-108B	LEVEL 08 - PLUMBING PLAN - AREA B	Hoefer Welker 100% SD
8/1/2025	P-109A	LEVEL 09 - PLUMBING PLAN - AREA A	Hoefer Welker 100% SD
8/1/2025	P-109B	LEVEL 09 - PLUMBING PLAN - AREA B	Hoefer Welker 100% SD
8/1/2025	P-110A	PENTHOUSE - PLUMBING PLAN - AREA A	Hoefer Welker 100% SD
8/1/2025	P-110B	PENTHOUSE - PLUMBING PLAN - AREA B	Hoefer Welker 100% SD
8/1/2025	P-111A	ROOF - PLUMBING PLAN - AREA A	Hoefer Welker 100% SD
8/1/2025	P-111B	ROOF - PLUMBING PLAN - AREA B	Hoefer Welker 100% SD
8/1/2025	P-401	ENLARGED PLUMBING PLANS	Hoefer Welker 100% SD
8/1/2025	P-402	ENLARGED PLUMBING PLANS	Hoefer Welker 100% SD

8/1/2025	P-701	DOMESTIC WATER RISER DIAGRAM	Hoefer Welker 100% SD
8/1/2025	P-702	MEDICAL GAS RISER DIAGRAM	Hoefer Welker 100% SD
8/1/2025	P-900	PLUMBING DETAILS	Hoefer Welker 100% SD
8/1/2025	P-901	PLUMBING DETAILS	Hoefer Welker 100% SD
8/1/2025	P-902	PLUMBING DETAILS	Hoefer Welker 100% SD
8/1/2025	P-903	PLUMBING DETAILS	Hoefer Welker 100% SD
8/1/2025	P-904	PLUMBING DETAILS	Hoefer Welker 100% SD
8/1/2025	P-905	PLUMBING DETAILS	Hoefer Welker 100% SD
8/1/2025	P-906	PLUMBING DETAILS	Hoefer Welker 100% SD
8/1/2025	P-907	PLUMBING DETAILS	Hoefer Welker 100% SD
8/1/2025	PS-100	PLUMBING SITE PLAN	Hoefer Welker 100% SD
8/1/2025	M-000	MECHANICAL LEGENDS, INDEX, AND NOTES	Hoefer Welker 100% SD
8/1/2025	M-001	MECHANICAL NOTES	Hoefer Welker 100% SD
8/1/2025	M-101	FIRST FLOOR - MECHANICAL DUCTWORK PLAN	Hoefer Welker 100% SD
8/1/2025	M-102	SECOND FLOOR - MECHANICAL DUCTWORK PLAN	Hoefer Welker 100% SD
8/1/2025	M-103	THIRD FLOOR - MECHANICAL DUCTWORK PLAN	Hoefer Welker 100% SD
8/1/2025	M-104	FOURTH FLOOR - MECHANICAL DUCTWORK PLAN	Hoefer Welker 100% SD
8/1/2025	M-105	FIFTH FLOOR - MECHANICAL DUCTWORK PLAN	Hoefer Welker 100% SD
8/1/2025	M-106	SIXTH FLOOR - MECHANICAL DUCTWORK PLAN	Hoefer Welker 100% SD
8/1/2025	M-107	SEVENTH FLOOR - MECHANICAL DUCTWORK PLAN	Hoefer Welker 100% SD
8/1/2025	M-108	EIGHTH FLOOR - MECHANICAL DUCTWORK PLAN	Hoefer Welker 100% SD
8/1/2025	M-109	NINTH FLOOR - MECHANICAL DUCTWORK PLAN	Hoefer Welker 100% SD
8/1/2025	M-110	PENTHOUSE AND ROOF - MECHANICAL DUCTWORK PLAN	Hoefer Welker 100% SD
8/1/2025	M-111	FIRST FLOOR - MECHANICAL PIPING PLAN	Hoefer Welker 100% SD
8/1/2025	M-112	SECOND FLOOR - MECHANICAL PIPING PLAN	Hoefer Welker 100% SD
8/1/2025	M-113	THIRD FLOOR - MECHANICAL PIPING PLAN	Hoefer Welker 100% SD
8/1/2025	M-114	FOURTH FLOOR - MECHANICAL PIPING PLAN	Hoefer Welker 100% SD
8/1/2025	M-115	FIFTH FLOOR - MECHANICAL PIPING PLAN	Hoefer Welker 100% SD
8/1/2025	M-116	SIXTH FLOOR - MECHANICAL PIPING PLAN	Hoefer Welker 100% SD
8/1/2025	M-117	SEVENTH FLOOR - MECHANICALPIPING PLAN	Hoefer Welker 100% SD
8/1/2025	M-118	EIGHTH FLOOR - MECHANICAL PIPING PLAN	Hoefer Welker 100% SD
8/1/2025	M-119	NINTH FLOOR - MECHANICAL PIPING PLAN	Hoefer Welker 100% SD
8/1/2025	M-120	PENTHOUSE AND ROOF - MECHANICAL PIPING PLAN	Hoefer Welker 100% SD
8/1/2025	M-521	MECHANICAL CHW RISER DIAGRAMS	Hoefer Welker 100% SD
8/1/2025	M-522	MECHANICAL HHW RISER DIAGRAMS	Hoefer Welker 100% SD
8/1/2025	M-523	MECHANICAL SUPPLY RETURN DUCTWORK RISER DIAGRAMS	Hoefer Welker 100% SD
8/1/2025	M-524	MECHANICAL EXHAUST DUCTWORK RISER DIAGRAMS	Hoefer Welker 100% SD
8/1/2025	M-601	MECHANICAL SCHEDULES	Hoefer Welker 100% SD
8/1/2025	M-602	MECHANICAL SCHEDULES	Hoefer Welker 100% SD
8/1/2025	M-603	MECHANICAL SCHEDULES	Hoefer Welker 100% SD
8/1/2025	E-000	ELECTRICAL LEGENDS, INDEX, AND NOTES	Hoefer Welker 100% SD
8/1/2025	E-100	SITE PLAN - ELECTRICAL POWER PLAN	Hoefer Welker 100% SD
8/1/2025	E-101	LEVEL 1 - ELECTRICAL POWER PLAN	Hoefer Welker 100% SD
8/1/2025	E-102	LEVEL 2 - ELECTRICAL POWER PLAN	Hoefer Welker 100% SD
8/1/2025	E-103	LEVEL 3 - ELECTRICAL POWER PLAN	Hoefer Welker 100% SD
8/1/2025	E-104	LEVEL 4 - ELECTRICAL POWER PLAN	Hoefer Welker 100% SD
8/1/2025	E-105	LEVEL 5 - ELECTRICAL POWER PLAN	Hoefer Welker 100% SD
8/1/2025	E-106	LEVEL 6 - ELECTRICAL POWER PLAN	Hoefer Welker 100% SD
8/1/2025	E-107	LEVEL 7 - ELECTRICAL POWER PLAN	Hoefer Welker 100% SD
8/1/2025	E-108	LEVEL 8 - ELECTRICAL POWER PLAN	Hoefer Welker 100% SD
8/1/2025	E-109	LEVEL 9 - ELECTRICAL POWER PLAN	Hoefer Welker 100% SD

8/1/2025	E-110	PENTHOUSE AND ROOF - POWER PLAN	Hoefer Welker 100% SD
8/1/2025	E-401	ELECTRICAL ENLARGED PLANS	Hoefer Welker 100% SD
8/1/2025	E-601	ELECTRICAL RISER DIAGRAM	Hoefer Welker 100% SD
8/1/2025	E-602	ELECTRICAL RISER DIAGRAM	Hoefer Welker 100% SD
8/1/2025	E-701	ELECTRICAL ONE LINE DIAGRAM - NORMAL AND EMERGENCY	Hoefer Welker 100% SD

Attachment 10 – Construction Manager-Owned Equipment Rental Rates

(Not Used)

Attachment 11 – Construction Manager's Quality Control Plan

(Not Used)

Attachment 12 – Site Logistics

(Attached)

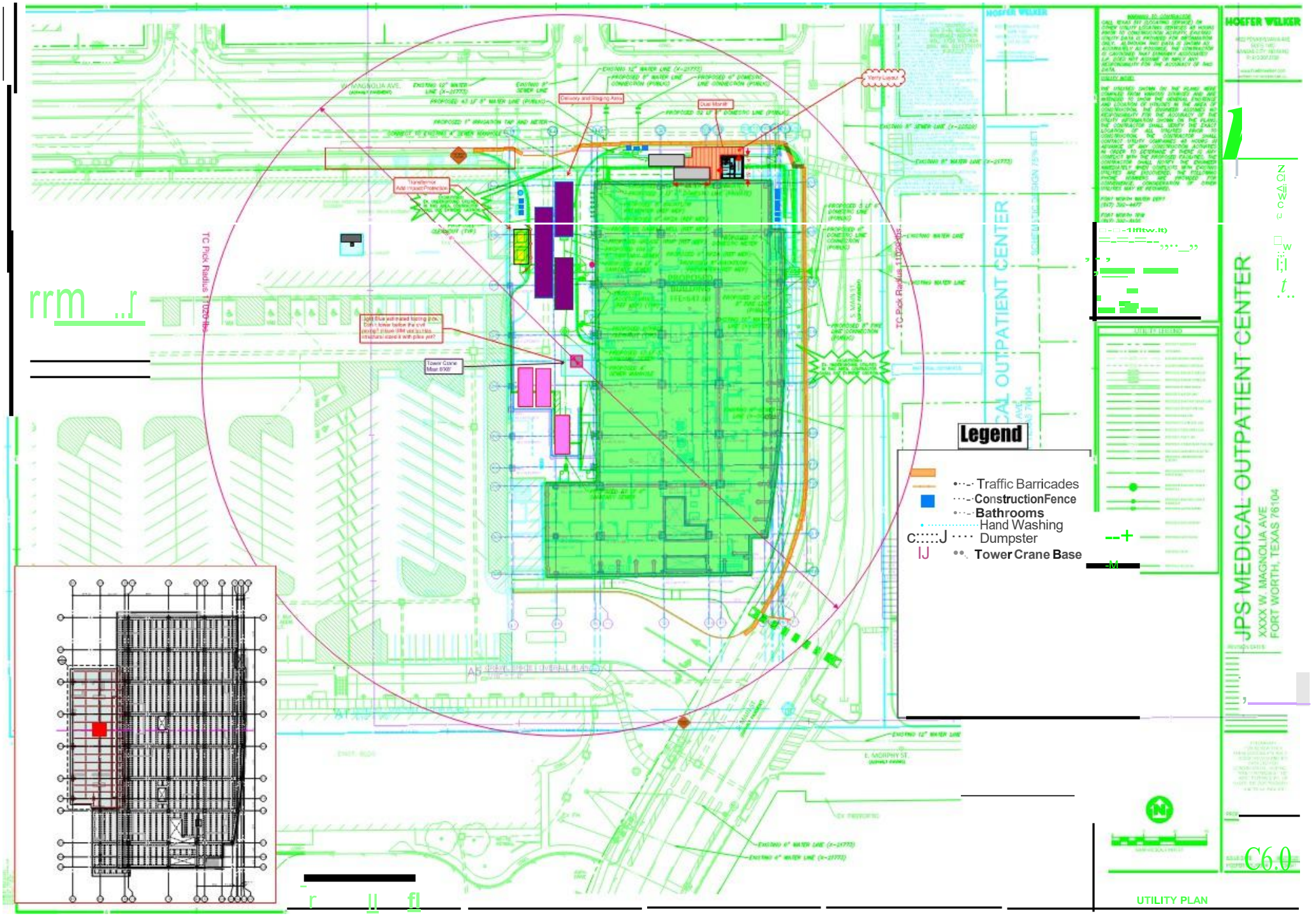
Legend
Traffic Barricades
ConstructionFence
Bathrooms
Hand Washing
Dumpster
Tower Crane Base
JPS MEDICAL OUTPATIENT CENTER
XXXX W. MAGNOLIA AVE
FORT WORTH, TEXAS 76104
C6.0
UTILITY PLAN

TARRANT COUNTY
COMMISSIONERS COURT COMMUNICATION

Court Date: December 9, 2025	**Court Order #:**	**Page:** 1 of 1
Department: Administrator	**Prepared By:** Lani Taylor	**Approved By:** Daphne Walker

SUBJECT:

Consideration of the Third Amendment to a Lease Agreement between Tarrant County Hospital District, d/b/a JPS Health Network and Oral and Maxillofacial Network, PLLC for Clinic Space Located at 1625 St. Louis Street, Fort Worth, Texas

COMMISSIONERS COURT ACTION REQUESTED

It is requested that the Commissioners Court consider a Third Amendment to the Lease Agreement between Tarrant County Hospital District (TCHD) and Oral and Maxillofacial Network, PLLC to extend the lease of 2,477 square feet of space located at 1625 St. Louis Avenue, Fort Worth, TX 76104 for an additional three (3) years.

BACKGROUND

On September 20, 2016, the Commissioners Court, through Court Order #123504, approved a lease agreement for an initial term of five (5) years with the option to renew for an additional three (3) years beyond the initial term. Pursuant to the First Amendment, TCHD exercised the renewal option at the end of the initial term.

On December 3, 2024, the Commissioners Court, through Court Order #144344, approved an amendment to extend the lease through December 31, 2025 at a rate of $64,049.05.

TCHD is now requesting to extend the term of the lease agreement for an additional three (3) year term, comencing on January 1, 2026, and expiring on December 31, 2028.

TCHD's Board of Managers approved the attached Third Amendment to the Lease Agreement at its November 13, 2025 Board of Managers meeting. TCHD Counsel had approved the Lease as to form.

FISCAL IMPACT

The total rent for three (3) additional years is $177,367.00.

Attachments

LEASE AMENDMENT 3 - OMF NETWORK.pdf

THIRD AMENDMENT TO LEASE AGREEMENT
BETWEEN
TARRANT COUNTY DISTRICT d/b/a JPS Health Network AND
ORAL & MAXILLOFACIAL NETWORK, P.L.L.C.

This Third Amendment (this "**Third Amendment**") is entered into effective as of September 1, 2024 (the "**Amendment Effective Date**") by and between Oral & Maxillofacial Network, P.L.L.C. ("**Tenant**") and Tarrant County Hospital District d/b/a JPS Health Network ("**Landlord**"). The Landlord and Tenant are each a "**Party**" and are collectively referred to herein as the "**Parties**".

WHEREAS, the Parties entered into that certain Lease Agreement, dated September 1, 2016. (the "**Lease**") for Tenant's rental and occupation of the building located in Tarrant County at 1625 St. Louis Street, Fort Worth, Texas 76104 (the "**Property**"); and

WHEREAS the First Amendment to the Lease was entered into agreement effective September 1, 2021 ("First Amendment"), to extend the Lease for an additional term of three (3) years expiring on August 31, 2024; and

WHEREAS the **Second Amendment** to the Lease, as amended ("**Second Amendment**"), was entered into agreement effective September 1, 2024, for an additional term of fifteen (15) months, and is due to expire on December 31, 2025; and

NOW, THEREFORE, the Parties hereby agree to extend the Term of the Lease, as amended, as follows:

1. **Amendment to Section 1.05 (Term)**. Section 1.05 of the Lease is hereby deleted in its entirety and replaced with the following:

   Section 1.05. Term. The Term of this Lease, as amended, commenced on September 1, 2016, and, as previously extended, is scheduled to expire on December 31, 2025. The Term is hereby further extended for an additional period commencing on January 1, 2026, and expiring on December 31, 2028 (the "Extended Term"), unless sooner terminated in accordance with this Lease.

2. **Amendment to Section 3.01 (Manner of Payment)**. Section 3.01 of the Lease is hereby deleted in its entirety and replaced with the following:

   3.01 Manner of Payment. All sums payable under this Lease by Tenant (the "Rent") will be made to the Landlord at the address designated in Section 1.02, unless another person is designated in Section 1.08, or to any other party or address as Landlord may designate in writing. Any and all payments made to a designated third party for the account of the Landlord, shall be deemed made to Landlord when received, by the designated third party. All sums payable by Tenant under this Lease, whether or not expressly denominated as rent, will constitute rent for the purposes of Section 502(b)(6) of the United States Bankruptcy Code and for all other purposes. The Base Rent is the minimum rent for the Premises and is subject to the terms and conditions contained in this Lease, together with the attached Addenda, if any.

3. Except as specifically modified herein, all of the terms, covenants and conditions of the Agreement are hereby affirmed and remain in full force and effect. Capitalized terms not defined herein shall have the meaning ascribed to them in the Agreement.

4. Notwithstanding the above, this Amendment shall not be deemed to modify, amend, waive, or discharge any liability, cause, claim duty or obligations under the Lease prior to the Effective Date of this Amendment, not otherwise changed or modified hereby.

5. Tenant represents and warrants that the Tenant has not dealt with any broker in connection with this Amendment, and that no other broker negotiated this Amendment nor is entitled to any commission in connection therewith.

6. Tenant shall indemnify and hold Landlord harmless from and against any and all claims for commission, fee or other compensation with this Amendment.

IN WITNESS WHEREOF, the undersigned duly authorized representatives of Landlord and Tenant have executed this Amendment on the dates set forth below their signatures to be effective as of the Amendment Effective Date.

TENANT:

Oral & Maxillofacial Network, P.L.L.C.

By: John Stella

Name: John Stella

Title: President / owner

Date: 9/9/25

LANDLORD:

Tarrant County Hospital District
d/b/a JPS Health Network

By: _____

Name: _____

Title: _____

Date: _____

TARRANT COUNTY
COMMISSIONERS COURT COMMUNICATION

Court Date: December 9, 2025	**Court Order #:**	**Page:** 1 of 6

Department: Elections Administration	**Prepared By:** Troy Havard, Assistant Elections Administrator	**Approved By:** Clinton Ludwig

SUBJECT:

Consideration to Approve an Order Calling a Special Runoff Election on January 31, 2026

COMMISSIONERS COURT ACTION REQUESTED

It is requested that the Commissioners Court consider approving an Order calling a Special Runoff Election on January 31, 2026, to fill the vacancy for State Senate District 9.

BACKGROUND

On November 17, 2025, Governor Greg Abbott issued a proclamation calling a Special Runoff Election to fill the vacancy created by the resignation of Honorable Kelly Hancock of State Senate District 9. Texas Election Code Section 2.025(d) requires that a special runoff election be held not earlier than the 70th day or later than the 77th day after the date the final canvass of the main election is completed. In this case, the date ordered by the Governor is Saturday, January 31, 2026.

FISCAL IMPACT

The fiscal impact of this item is $1,639,000. Funding is available in account 10000-2026 General Fund/1420000000 Elections Administration/Various G/L Accounts.

Attachments

SD9 Runoff Proclamation.pdf

TC Order of Special Election SD9.pdf

GOVERNOR GREG ABBOTT

November 17, 2025

FILED IN THE OFFICE OF THE
TEXAS SECRETARY OF STATE
11:15 AM O'CLOCK
NOV 17 2025
Jane Nelson
Secretary of State

The Honorable Jane Nelson
Secretary of State
State Capitol, Room 1E.8
Austin, Texas 78701

Dear Secretary Nelson:

Pursuant to his powers as Governor of the State of Texas, Greg Abbott has issued the following:

> A proclamation ordering a special runoff election to be held in Texas Senate District No. 9 on Saturday, January 31, 2026, for the purpose of electing a State Senator for Senate District No. 9 to serve out the unexpired term of the Honorable Kelly Hancock.

The original proclamation is attached to this letter of transmittal.

Respectfully submitted,

Gregory S. Davidson
Executive Clerk to the Governor

GSD:gsd

Attachment

PROCLAMATION

BY THE

Governor of the State of Texas

TO ALL TO WHOM THESE PRESENTS SHALL COME:

WHEREAS, the resignation of the Honorable Kelly Hancock, and its acceptance, have caused a vacancy for an unexpired term in the Texas Senate for Senate District No. 9, which is wholly contained within Tarrant County; and

WHEREAS, a special election to fill the vacancy for the unexpired term in Texas Senate District No. 9 was held on Tuesday, November 4, 2025, and the results of that special election have been officially declared and canvassed on Saturday, November 15, 2025; and

WHEREAS, no candidate in the special election for the unexpired term received a majority of the votes cast, as required by Section 203.003 of the Texas Election Code; and

WHEREAS, Section 2.021 of the Texas Election Code requires that a runoff election be held if no candidate receives the votes necessary to be elected; and

WHEREAS, Sections 2.024 and 3.003(a)(3) of the Texas Election Code require a special legislative runoff election to be ordered by proclamation of the governor no later than the fifth day after the date the final canvass of the main election is completed; and

WHEREAS, Section 2.025(d) of the Texas Election Code provides that the runoff election for a special election to fill a vacancy in the Legislature must be held not earlier than the 70th day nor later than the 77th day after the date the final canvass of the main election is completed; and

NOW, THEREFORE, I, GREG ABBOTT, Governor of Texas, under the authority vested in me by the Constitution and Statutes of the State of Texas, do hereby order a special runoff election to be held for the unexpired term in Texas Senate District No. 9 on Saturday, January 31, 2026, for the purpose of electing a State Senator for Senate District No. 9 to serve out the unexpired term of the Honorable Kelly Hancock.

Early voting by personal appearance shall begin on Wednesday, January 21, 2026, and end on Tuesday, January 27, 2026, in accordance with Section 85.001(a)–(b) of the Texas Election Code.

A copy of this order shall be mailed immediately to the Tarrant County Judge, who presides over the county within which Texas Senate District No. 9 is wholly contained, and all appropriate writs shall be issued, and all proper proceedings shall be followed to the end that said election may be held to fill the vacancy for an unexpired term in Texas Senate District No. 9 and its result proclaimed in accordance with law.



IN TESTIMONY WHEREOF, I have hereto signed my name and have officially caused the Seal of State to be affixed at my office in the City of Austin, Texas, this the 17th day of November, 2025.

Greg Abbott

GREG ABBOTT
Governor

FILED IN THE OFFICE OF THE SECRETARY OF STATE
11:15AM O'CLOCK

NOV 17 2025

ATTESTED BY:

JANE NELSON
Secretary of State

FILED IN THE OFFICE OF THE
SECRETARY OF STATE
11:15 AM O'CLOCK

NOV 17 2025

1-7
Prescribed by Secretary of State
Sections 3.003, 3.004, 3.005, 3.006, 83.010, 85.004, 85.007, Texas Election Code 9/2023

Order of Special Election
Orden de Elección Especial
Lệnh Bầu Cử Đặc Biệt

An election is hereby ordered to be held on January 31, 2026, in Tarrant County, Texas for the purpose of electing the following county and precinct officers as required by Article XVI, Section 65 of the Texas Constitution.
(Por la presente se ordena que se lleve a cabo una elección el 31 de enero del 2026, en el Condado de Tarrant, Texas, con el propósito de elegir los siguientes oficiales del condado y del precinto como requerido por el Articulo XVI, Sección 65, de la Constitución de Texas.)
(Một cuộc bầu cử được yêu cầu sẽ được tổ chức vào ngày 31 tháng 1 năm 2026, tại Quận Tarrant, Texas với mục đích bầu các viên chức quận và hạt sau theo yêu cầu của Điều XVI, Mục 65 Hiến Pháp của Texas.)

Offices (Oficiales) (Văn phòng)

State Senator District 9 Senador Estatal Distrito 9 Thượng Nghị Sĩ Tiểu Bang, Đơn vị 9

EARLY VOTING BY PERSONAL APPEARANCE DAYS AND HOURS
(DÍAS Y HORAS DE VOTACIÓN TEMPRANO POR APARICIÓN PERSONAL)
(Ngày và giờ đi bầu cử sớm)

January *(Enero) (Tháng Một)* 21 -23	Wednesday – Friday *(Miércoles – Viernes) (Thứ Tư – Thứ Sáu)*	8:00 a.m. – 5:00 p.m.
January (*Enero) (Tháng Một)* 24	Saturday *(Sábado) (Thứ Bảy)*	7:00 a.m. – 7:00 p.m.
January *(Enero) (Tháng Một)* 25	Sunday *(Domingo) (Chủ Nhật)*	10:00 a.m. – 4:00 p.m.
January *(Enero) (Tháng Một)* 26 - 27	Monday – Tuesday *(Lunes - Martes) (Thứ Hai - Thứ Ba)*	7:00 a.m. – 7:00 p.m.

Main Early Voting Site
(Principal sitio de votación adelantada)
(Trung Tâm Bầu Cử Sớm)

Tarrant County Election Center
2700 Premier Street
Fort Worth, Texas 76111

Application for a Ballot by Mail may be downloaded from our website: **www.tarrantcountytx.gov/elections**
*(Solicitud para Boleta por Correo se puede descargar de nuestro sitio web): **www.tarrantcountytx.gov/elections***
(Có thể tải Đơn xin lá Phiếu Bầu qua Thư trên trang mạng của chúng tôi): ***www.tarrantcountytx.gov/elections***

Information by phone: Tarrant County Elections Administration, 817-831-8683
(Información por teléfono): (Administración de Elecciones del Condado de Tarrant 817-831-8683)
(Thông tin qua điện thoại) (Điều Hành Bầu Cử Quận Tarrant, 817-831-8683)

Applications for a Ballot by Mail must be submitted between December 2, 2025 and January 20, 2026 by mail, fax or email to:
Note: effective December 1, 2017 - If an Application for Ballot by Mail is submitted by fax or e-mail the original application must also be mailed and received by the Early Voting Clerk no later than the 4th business day after receipt of the faxed or e-mailed copy.

(Solicitudes para una Boleta por Correo pueden ser sometidas entre el 2 de Diciembre de 2025 y 20 de Enero de 2026 por correo, fax o por correo electrónico a:
***Nota: efectivo el 1 de Diciembre de 2017** - Si una solicitud de boleta por correo se envía por fax o por correo electrónico la solicitud original también debe ser enviada por correo y recibida por el Secretario de Votación Anticipada no más tarde del cuarto día hábil después de recibir la copia enviada por fax o por correo electrónico.)*

(Đơn xin lá phiếu bầu qua thư phải được gửi vào giữa Ngày 2 Tháng 12, Năm 2025 và Ngày 20 Tháng 1, Năm 2026 bằng thư, fax hoặc email đến:
***Lưu ý: có hiệu lực từ ngày 1 tháng 12 năm 2017** - Nếu Đơn Xin Lá Phiếu bầu qua thư được gửi bằng fax hoặc e-mail, đơn xin bản gốc cũng phải được gửi bằng thư đến và nhận bởi Thư Ký Phụ Trách Bỏ Phiếu Sớm không muộn hơn ngày làm việc thứ tư kể từ ngày nhận được bản sao từ fax hoặc e-mail.)*

Early Voting Clerk *(Secretario De Votación Adelantada) (Nhân Viên Phụ Trách Bỏ Phiếu Sớm)*
PO Box 961011
Fort Worth TX 76161-0011
Fax: 817-850-2344
Email: votebymail@tarrantcountytx.gov

Issued this the 9th day of December 2025.
(Emitada este día 9 de diciembre del 2025.)
*(*Ban hành ngày 9 tháng 12 năm 2025.)

_____

Signature of County Judge (Firma del Juez del Condado) Chữ Ký của Thẩm Phán Quận

_____

County Commissioner (Comisionado del Condado) Ủy Viên Quận) Chữ ký của Ủy viên Quận ủy

_____

County Commissioner (Comisionado del Condado) Ủy Viên Quận) Chữ ký của Ủy viên Quận ủy

_____

County Commissioner (Comisionado del Condado) Ủy Viên Quận) Chữ ký của Ủy viên Quận ủy

_____

County Commissioner (Comisionado del Condado) Ủy Viên Quận) Chữ ký của Ủy viên Quận ủy

TARRANT COUNTY
COMMISSIONERS COURT COMMUNICATION

Court Date: December 9, 2025	**Court Order #:**	**Page:** 1 of 7
Department: Elections Administration	**Prepared By:** Troy Havard, Assistant Elections Administrator	**Approved By:** Clinton Ludwig

SUBJECT:

Consideration to Approve Proposed Election Day Polling Locations for the January 31, 2026 Special Runoff Election for Senate District 9

COMMISSIONERS COURT ACTION REQUESTED

It is requested that the Commissioners Court consider approving the combined voting precincts as detailed in the attachments, and approving the recommended Election Day polling locations based on that combining.

BACKGROUND

Texas Election Code Section 43.002 requires the Commissioners Court to designate at least one polling place in each election precinct for Election Day. The Elections Administrator is responsible for recommending these locations to the Court for approval. Texas Election Code Section 43.007 requires that polling locations for special elections also be approved by the Commissioners Court. Approval of this item will establish the official list of polling locations for Election Day for the January 31, 2026 Special Runoff election for Senate District 9.

FISCAL IMPACT

There is no fiscal impact associated with this item.

Attachments

142 SD9 Runoff Vote Centers.pdf

STATE SENTATE, DISTRICT 9 RUNOFF ELECTION - JANUARY 31, 2026
7:00 am - 7:00 pm
SENADO ESTATAL, DISTRITO 9 ELECCIÓN DE DESEMPATE - 31 DE ENERO DE 2026
THƯỢNG VIỆN TIỂU BANG, QUẬN 9 BẦU CỬ CHUNG CUỘC - NGÀY 31 THÁNG 1, NĂM 2026

Number	**Countywide Polling Place** *Lugar de Votación del Condado* *Địa Điểm Bỏ Phiếu Toàn Quận*	**Voting Area** *Área de votación* *Khu Vực Bỏ Phiếu*	**Address** *Dirección* *Địa Chỉ*	**City and Zip** *Ciudad y Código* *Thành Phố và Mã Bưu Điện*
1	Handley-Meadowbrook Community Center		6201 Beaty Street	Fort Worth, TX 76112
2	Andrew "Doc" Session Community Center		201 South Sylvania Avenue	Fort Worth, TX 76111
3	Southside Community Center		959 East Rosedale Street	Fort Worth, TX 76104
4	E. M. Daggett Elementary School		958 Page Avenue	Fort Worth, TX 76110
5	Sycamore Recreation Center		2525 East Rosedale Street	Fort Worth, TX 76105
6	Riverside Community Center		3700 East Belknap Street	Fort Worth, TX 76111
7	William M. McDonald YMCA		2701 Moresby Street	Fort Worth, TX 76105
8	Morningside Elementary School		2601 Evans Avenue	Fort Worth, TX 76104
9	Rising Star Baptist Church		4216 Avenue M	Fort Worth, TX 76105
10	Worth Heights Community Center		3551 New York Avenue	Fort Worth, TX 76110
11	Oakhurst Elementary School		2700 Yucca Avenue	Fort Worth, TX 76111
12	All Peoples Church Unitarian Universalist		1959 Sandy Lane	Fort Worth, TX 76112
13	Charles F. Griffin Building		3212 Miller Avenue	Fort Worth, TX 76119
14	Asia Times Square		2615 West Pioneer Parkway	Grand Prairie, TX 75051
15	Dionne Phillips Bagsby Southwest Subcourthouse		6551 Granbury Road	Fort Worth, TX 76133
16	Victory Forest Community Center		3427 Hemphill Street	Fort Worth, TX 76110
17	The Potter's House		1270 Woodhaven Boulevard	Fort Worth, TX 76112
18	New Life Deaf Fellowship		6917 Brentwood Stair Road	Fort Worth, TX 76112
19	House of Prayer & Praise Church		5025 Avenue G	Fort Worth, TX 76105
20	Candlewood Suites Hotel		4200 Reggis Court	Fort Worth, TX 76155
21	Legacy Fellowship Church		5320 Norma Street	Fort Worth, TX 76112
22	East Regional Library		6301 Bridge Street	Fort Worth, TX 76112
23	Shepherd of Life Lutheran Church		715 East Lamar Boulevard	Arlington, TX 76011
24	Bill J. Elliott Elementary School		2501 Cooks Lane	Fort Worth, TX 76120
25	Lowery Road Elementary School		7600 Lowery Road	Fort Worth, TX 76120
26	St. Matthew's Lutheran Church		5709 Wedgwood Drive	Fort Worth, TX 76133

STATE SENTATE, DISTRICT 9 RUNOFF ELECTION - JANUARY 31, 2026
7:00 am - 7:00 pm
SENADO ESTATAL, DISTRITO 9 ELECCIÓN DE DESEMPATE - 31 DE ENERO DE 2026
THƯỢNG VIỆN TIỂU BANG, QUẬN 9 BẦU CỬ CHUNG CUỘC - NGÀY 31 THÁNG 1, NĂM 2026

Number	**Countywide Polling Place** *Lugar de Votación del Condado* *Địa Điểm Bỏ Phiếu Toàn Quận*	**Voting Area** *Área de votación* *Khu Vực Bỏ Phiếu*	**Address** *Dirección* *Địa Chỉ*	**City and Zip** *Ciudad y Código* *Thành Phố và Mã Bưu Điện*
27	Atherton Elementary School		2101 Overbrook Drive	Arlington, TX 76014
28	Epworth United Methodist Church		1400 South Cooper Street	Arlington, TX 76013
29	Sherrod Elementary School		2626 Lincoln Drive	Arlington, TX 76006
30	James Avenue Service Center		5001 James Avenue	Fort Worth, TX 76115
31	HighRidge Church		10100 Rolling Hills Drive	Fort Worth, TX 76126
32	Town of Pantego Council Chambers		1614 South Bowen Road	Pantego, TX 76013
33	Western Hills Church of Christ		8800 Chapin Road	Fort Worth, TX 76116
34	Redeemer Lutheran Church		4513 Williams Road	Fort Worth, TX 76116
35	Tarrant County Subcourthouse in Arlington		700 East Abram Street	Arlington, TX 76010
36	East Library and Recreation Center		1817 New York Avenue	Arlington, TX 76010
37	Woodland West Church of Christ		3101 West Park Row Drive	Arlington, TX 76013
38	R. D. Evans Community Center		3242 Lackland Road	Fort Worth, TX 76116
39	John Webb Elementary School		1300 North Cooper Street	Arlington, TX 76011
40	Benbrook Community Center YMCA		1899 Winscott Road	Benbrook, TX 76126
41	St. Stephen Methodist Church		1800 West Randol Mill Road	Arlington, TX 76012
42	ACTIV		2061 West Green Oaks Boulevard	Arlington, TX 76013
43	Bob Duncan Center		2800 South Center Street	Arlington, TX 76014
44	Shackelford Junior High School		2000 North Fielder Road	Arlington, TX 76012
45	Southwest Community Center		6300 Welch Avenue	Fort Worth, TX 76133
46	Foster Elementary School		1025 High Point Road	Arlington, TX 76015
47	St. Peter's Antiochian Orthodox Church		7601 Bellaire Drive South	Fort Worth, TX 76132
48	Faith Lutheran Church		4551 Southwest Boulevard	Fort Worth, TX 76116
49	Ridglea Baptist Church		6037 Calmont Avenue	Fort Worth, TX 76116
50	Benbrook Community Center		228 San Angelo Avenue	Benbrook, TX 76126
51	Hurst Public Library		901 Precinct Line Road	Hurst, TX 76053
52	Keller Town Hall		1100 Bear Creek Parkway	Keller, TX 76248

STATE SENTATE, DISTRICT 9 RUNOFF ELECTION - JANUARY 31, 2026
7:00 am - 7:00 pm
SENADO ESTATAL, DISTRITO 9 ELECCIÓN DE DESEMPATE - 31 DE ENERO DE 2026
THƯỢNG VIỆN TIỂU BANG, QUẬN 9 BẦU CỬ CHUNG CUỘC - NGÀY 31 THÁNG 1, NĂM 2026

Number	**Countywide Polling Place** *Lugar de Votación del Condado* *Địa Điểm Bỏ Phiếu Toàn Quận*	**Voting Area** *Área de votación* *Khu Vực Bỏ Phiếu*	**Address** *Dirección* *Địa Chỉ*	**City and Zip** *Ciudad y Código* *Thành Phố và Mã Bưu Điện*
53	House of Grace		7850 Davis Boulevard	North Richland Hills, TX 76182
54	Grapevine Public Library	Program	1201 Municipal Way	Grapevine, TX 76051
55	First Baptist Hurst Norwood Campus		1801 Norwood Drive	Hurst, TX 76054
56	Stonegate Elementary School		900 Bedford Road	Bedford, TX 76022
57	The Link		6750 Baker Boulevard	Richland Hills, TX 76118
58	North Pointe Baptist Church		147 East Hurst Boulevard	Hurst, TX 76053
59	Brookside Center		1244 Brookside Drive	Hurst, TX 76053
60	Liberty Elementary School		1101 West McDonwell School Road	Colleyville, TX 76034
61	First Baptist Watauga		6124 Plum Street	Watauga, TX 76148
62	Gary Fickes Northeast Courthouse		645 Grapevine Highway	Hurst, TX 76054
63	Central Baptist Church		1120 Central Drive	Bedford, TX 76022
64	Richland High School		5201 Holiday Lane	North Richland Hills, TX 76180
65	Freedom Elementary School		5401 Wall Price Keller Road	Fort Worth, TX 76244
66	Pat May Center		1849-B Central Drive	Bedford, TX 76022
67	Watauga City Hall		7105 Whitley Road	Watauga, TX 76148
68	Cross Church North Richland Hills Campus		6955 Boulevard 26	North Richland Hills, TX 76180
69	Elzie Odom Athletic Center		1601 Northeast Green Oaks Boulevard	Arlington, TX 76006
70	North Richland Hills City Hall		4301 City Point Drive	North Richland Hills, TX 76180
71	North Richland Hills Public Library		9015 Grand Avenue	North Richland Hills, TX 76180
72	Bedford Public Library		2424 Forest Ridge Drive	Bedford, TX 76021
73	Keller United Methodist Church		1025 Johnson Road	Keller, TX 76248
74	Bransford Elementary School		601 Glade Road	Colleyville, TX 76034
75	Ridgeview Elementary School		1601 Marshall Ridge Parkway	Keller, TX 76248
76	The Met Church		11301 North Riverside Drive	Fort Worth, TX 76244
77	WestWind Church		1300 Sarah Brooks Drive	Keller, TX 76248
78	Trophy Club Town Hall		1 Trophy Wood Drive	Trophy Club, TX 76262

STATE SENTATE, DISTRICT 9 RUNOFF ELECTION - JANUARY 31, 2026
7:00 am - 7:00 pm
SENADO ESTATAL, DISTRITO 9 ELECCIÓN DE DESEMPATE - 31 DE ENERO DE 2026
THƯỢNG VIỆN TIỂU BANG, QUẬN 9 BẦU CỬ CHUNG CUỘC - NGÀY 31 THÁNG 1, NĂM 2026

Number	**Countywide Polling Place** *Lugar de Votación del Condado* *Địa Điểm Bỏ Phiếu Toàn Quận*	**Voting Area** *Área de votación* *Khu Vực Bỏ Phiếu*	**Address** *Dirección* *Địa Chỉ*	**City and Zip** *Ciudad y Código* *Thành Phố và Mã Bưu Điện*
79	Southlake Town Hall		1400 Main Street	Southlake, TX 76092
80	Countryside Bible Church		251 Countryside Court	Southlake, TX 76092
81	Friendship Elementary School		5400 Shiver Road	Fort Worth, TX 76244
82	Bear Creek Bible Church		1555 North Tarrant Parkway	Keller, TX 76248
83	The Carlyle at Stonebridge Park		170 Stonebridge Lane	Southlake, TX 76092
84	Alliance Methodist Church		7904 Park Vista Boulevard	Fort Worth, TX 76137
85	St. Martin in-the-Fields Episcopal Church		223 South Pearson Lane	Keller, TX 76248
86	Light of the World Church		8750 North Riverside Drive	Keller, TX 76244
87	John M. Tidwell Middle School		3937 Haslet-Roanoke Road	Roanoke, TX 76262
88	Woodland Springs Elementary School		12120 Woodland Springs Drive	Fort Worth, TX 76244
89	Northpark YMCA		9100 North Beach Street	Fort Worth, TX 76244
90	Caprock Elementary School		12301 Grey Twig Drive	Fort Worth, TX 76244
91	Foster Village Elementary School		6800 Springdale Lane	North Richland Hills, TX 76182
92	Bette Perot Elementary School		9345 General Worth Drive	Fort Worth, TX 76244
93	River Trails Elementary School		8850 Elbe Trail	Fort Worth, TX 76118
94	Tarrant County Plaza Building		201 Burnett Street	Fort Worth, TX 76102
95	Landmark Baptist Church		1909 Thomas Road	Haltom City, TX 76117
96	Lake Country Church		8777 Boat Club Road	Fort Worth, TX 76179
97	Azle ISD PD		483 Sandy Beach Road, Suite A	Azle, TX 76020
98	Trinity Terrace		1600 Texas Street	Fort Worth, TX 76102
99	Church of the Holy Apostles		3900 Longvue Avenue	Fort Worth, TX 76126
100	Thomas Place Community Center		4237 Lafayette Avenue	Fort Worth, TX 76107
101	Sheriff's Office North Patrol Division		6651 Lake Worth Boulevard	Lake Worth, TX 76135
102	Lena Pope		3200 Sanguinet Street	Fort Worth, TX 76107
103	R. L. Paschal High School		2911 Forest Park Boulevard	Fort Worth, TX 76110
104	Northside Community Center		1100 Northwest 18th Street	Fort Worth, TX 76164

STATE SENTATE, DISTRICT 9 RUNOFF ELECTION - JANUARY 31, 2026
7:00 am - 7:00 pm
SENADO ESTATAL, DISTRITO 9 ELECCIÓN DE DESEMPATE - 31 DE ENERO DE 2026
THƯỢNG VIỆN TIỂU BANG, QUẬN 9 BẦU CỬ CHUNG CUỘC - NGÀY 31 THÁNG 1, NĂM 2026

Number	**Countywide Polling Place** *Lugar de Votación del Condado* *Địa Điểm Bỏ Phiếu Toàn Quận*	**Voting Area** *Área de votación* *Khu Vực Bỏ Phiếu*	**Address** *Dirección* *Địa Chỉ*	**City and Zip** *Ciudad y Código* *Thành Phố và Mã Bưu Điện*
105	Westover Hills Town Hall		5824 Merrymount Road	Westover Hills, TX 76107
106	Como Community Center		4660 Horne Street	Fort Worth, TX 76107
107	Pecan Grove Convention Center		405 North Las Vegas Trail	White Settlement, TX 76108
108	City of Sansom Park City Hall Municipal Court		5705 Azle Avenue	Sansom Park, TX 76114
109	Haltom City Library		4809 Haltom Road	Haltom City, TX 76117
110	Westworth Village City Hall		311 Burton Hill Road	Westworth Village, TX 76114
111	Haltom City Senior Center		3201 Friendly Lane	Haltom City, TX 76117
112	Legacy Learning Center Northwest ISD		501 School House Road	Haslet, TX 76052
113	White Settlement Public Library		8215 White Settlement Road	White Settlement, TX 76108
114	L. A. Gilliland Elementary School		701 Waggoman Road	Blue Mound, TX 76131
115	Diamond Hill/Jarvis Branch Library		1300 Northeast 35th Street	Fort Worth, TX 76106
116	Northwest Branch Library		6228 Crystal Lake Drive	Fort Worth, TX 76179
117	The Word @ Lakeside		9396 Confederate Park Road	Lakeside, TX 76135
118	Bluebonnet Elementary School		7000 Teal Drive	Fort Worth, TX 76137
119	Redeemer Bible Church		100 Verna Trail North	Fort Worth, TX 76108
120	The Edge Church (Good Shepherd Lutheran Church)		1313 Southeast Parkway	Azle, TX 76020
121	Heritage Baptist Church		1200 FM 156 South	Haslet, TX 76052
122	Dido United Methodist Church		5570 Dido Hicks Road	Fort Worth, TX 76179
123	Summerglen Branch Library		4205 Basswood Boulevard	Fort Worth, TX 76137
124	Lighthouse Fellowship		7200 Robertson Road	Fort Worth, TX 76135
125	Sunset Valley Elementary School		2032 Canchim Street	Fort Worth, TX 76131
126	Northbrook Elementary School		2500 Cantrell Sansom Road	Fort Worth, TX 76131
127	Springdale Baptist Church		3016 Selma Street	Fort Worth, TX 76111
128	Parkview Elementary School		6900 Bayberry Drive	Fort Worth, TX 76137
129	Blue Haze Elementary School		601 Blue Haze Drive	Fort Worth, TX 76108
130	Vista Ridge Middle School		3201 Thompson Road	Fort Worth, TX 76177

STATE SENTATE, DISTRICT 9 RUNOFF ELECTION - JANUARY 31, 2026
7:00 am - 7:00 pm
SENADO ESTATAL, DISTRITO 9 ELECCIÓN DE DESEMPATE - 31 DE ENERO DE 2026
THƯỢNG VIỆN TIỂU BANG, QUẬN 9 BẦU CỬ CHUNG CUỘC - NGÀY 31 THÁNG 1, NĂM 2026

Number	**Countywide Polling Place** *Lugar de Votación del Condado* *Địa Điểm Bỏ Phiếu Toàn Quận*	**Voting Area** *Área de votación* *Khu Vực Bỏ Phiếu*	**Address** *Dirección* *Địa Chỉ*	**City and Zip** *Ciudad y Código* *Thành Phố và Mã Bưu Điện*
131	Legacy Baptist Church		5500 Boat Club Road	Fort Worth, TX 76135
132	O. A. Peterson Elementary School		2000 Winter Hawk Drive	Fort Worth, TX 76177
133	Cross Church		10321 US-287	Fort Worth, TX 76131
134	Saginaw Public Library		300 West McLeroy Boulevard	Saginaw, TX 76179
135	Tarrant County College Northwest Campus		4801 Marine Creek Parkway	Fort Worth, TX 76179
136	VFW Post 10374		13825 US Highway 287	Fort Worth, TX 76179
137	Betsy Price Community Center		8375 Blue Mound Road	Fort Worth, TX 76131
138	Destiny Center		10200 FM 156	Fort Worth, TX 76131
139	Highland Middle School		1001 East Bailey Boswell Road	Fort Worth, TX 76131
140	Leo Adams Middle School		1075 Eagle Boulevard	Haslet, TX 76052
141	Sendera Ranch Elementary School		1216 Diamondback Lane	Haslet, TX 76052
142	Sonny and Allegra Nance Elementary School		701 Tierra Vista Way	Fort Worth, TX 76131

TARRANT COUNTY
COMMISSIONERS COURT COMMUNICATION

Court Date: December 9, 2025	**Court Order #:**	**Page:** 1 of 2
Department: Elections Administration	**Prepared By:** Troy Havard, Assistant Elections Administrator	**Approved By:** Clinton Ludwig

SUBJECT:

Consideration to Approve Proposed Early Voting Dates, Times and Polling Locations for the January 31, 2026 Congressional District 9 Runoff Election

COMMISSIONERS COURT ACTION REQUESTED

It is requested that the Commissioners Court consider approving the proposed Early Voting dates, times and polling locations for the January 31, 2026 Congressional Distric 9 Runoff Election.

BACKGROUND

Section 85.061 of the Texas Election Code provides for the establishment of Permanent Branch Early Voting sites by the established authority. Approval of this item will establish the official list of polling locations for Early Voting for the January 31, 2026 Congressional District 9 runoff election.

FISCAL IMPACT

There is no fiscal impact.

Attachments

SD9 EV Schedule_Draft.pdf

TARRANT COUNTY EARLY VOTING
(VOTACION ADELANTADA DEL CONDADO DE TARRANT)
(BẦU CỬ SỚM CỦA QUẬN TARRANT)

JANUARY 31, 2026
(31 DE ENERO DE 2026)
(NGÀY 31 THÁNG 1, NĂM 2026)

STATE SENATE, DISTRICT 9 RUNOFF ELECTION
(Senado Estatal, Distrito 9 Elección de Desempate)
*(*Thượng Viện Tiểu Bang, Quận 9 *Bầu Cử Chung Cuộc)*

EARLY VOTING BY PERSONAL APPEARANCE DAYS AND HOURS
(DÍAS Y HORAS DE VOTACIÓN TEMPRANO POR APARICIÓN PERSONAL)
(Ngày và giờ đi bầu cử sớm)

January *(Enero) (Tháng Một)* 21 -23	Wednesday – Friday *(Miércoles – Viernes) (Thứ Tư – Thứ Sáu)*	8:00 a.m. – 5:00 p.m.
January (*Enero) (Tháng Một)* 24	Saturday *(Sábado) (Thứ Bảy)*	7:00 a.m. – 7:00 p.m.
January *(Enero) (Tháng Một)* 25	Sunday *(Domingo) (Chủ Nhật)*	10:00 a.m. – 4:00 p.m.
January *(Enero) (Tháng Một)* 26 - 27	Monday – Tuesday *(Lunes - Martes) (Thứ Hai - Thứ Ba)*	7:00 a.m. – 7:00 p.m.

	Location ***(Ubicación)*** ***(Địa điểm)***	**Address** ***(Dirección)*** ***(Địa chỉ)***	**City** ***(Ciudad)*** ***(Thành phố)***	**Zip Code** ***(Código postal)*** ***(Mã Bưu Điện)***
1	Elzie Odom Athletic Center	1601 NE Green Oaks Boulevard	Arlington	76006
2	Tarrant County Subcourthouse in Arlington	700 E Abram Street	Arlington	76010
3	Azle ISD PD	483 Sandy Beach Road, Suite A	Azle	76020
4	Bedford Public Library	2424 Forest Ridge Drive	Bedford	76021
5	Benbrook Community Center	228 San Angelo Avenue	Benbrook	76126
6	Charles F. Griffin Building	3212 Miller Avenue	Fort Worth	76119
7	Como Community Center	4660 Horne Street	Fort Worth	76107
8	Handley-Meadowbrook Community Center	6201 Beaty Street	Fort Worth	76112
9	Northpark YMCA	9100 N Beach Street	Fort Worth	76244
10	Summerglen Branch Library	4205 Basswood Boulevard	Fort Worth	76137
11	Tarrant County College Northwest Campus *WFSC 1403A*	4801 Marine Creek Parkway	Fort Worth	76179
12	Tarrant County Elections Center *Main Early Voting Site* *(Principal sitio de votación adelantada)* *(Trung Tâm Bầu Cử Sớm)*	2700 Premier Street	Fort Worth	76111
13	Tarrant County Plaza Building	201 Burnett Street	Fort Worth	76102
14	Legacy Learning Center Northwest ISD	501 School House Road	Haslet	76052
15	Gary Fickes Northeast Courthouse	645 Grapevine Highway	Hurst	76054
16	Keller Town Hall	1100 Bear Creek Parkway	Keller	76248
17	Sheriff's Office North Patrol Division	6651 Lake Worth Boulevard	Lake Worth	76135
18	North Richland Hills City Hall	4301 City Point Drive	N Richland Hills	76180
19	Saginaw Public Library	300 W McLeroy Boulevard	Saginaw	76179
20	Southlake Town Hall	1400 Main Street	Southlake	76092
21	White Settlement Public Library	8215 White Settlement Road	White Settlement	76108

Application for a Ballot by Mail may be downloaded from our website: **www.tarrantcountytx.gov/elections**
(Solicitud para Boleta por Correo se puede descargar de nuestro sitio web): ***www.tarrantcountytx.gov/elections***
(Có thể tải Đơn xin lá Phiếu Bầu qua Thư trên trang mạng của chúng tôi): ***www.tarrantcountytx.gov/elections***

Information by phone: Tarrant County Elections Administration, 817-831-8683
(Información por teléfono): *(Administración de Elecciones del Condado de Tarrant 817-831-8683)*
(Thông tin qua điện thoại) *(Điều Hành Bầu Cử Quận Tarrant, 817-831-8683)*

Applications for a Ballot by Mail must be submitted between December 2, 2025 and January 20, 2026 by mail, fax or email to:
Note: effective December 1, 2017 - If an Application for Ballot by Mail is submitted by fax or e-mail the original application must also be mailed and received by the Early Voting Clerk no later than the 4th business day after receipt of the faxed or e-mailed copy.

(Solicitudes para una Boleta por Correo pueden ser sometidas entre el 2 de Diciembre de 2025 y 20 de Enero de 2026 por correo, fax o por correo electrónico a:
Nota: efectivo el 1 de Diciembre de 2017 *- Si una solicitud de boleta por correo se envía por fax o por correo electrónico la solicitud original también debe ser enviada por correo y recibida por el Secretario de Votación Anticipada no más tarde del cuarto día hábil después de recibir la copia enviada por fax o por correo electrónico.)*

(Đơn xin lá phiếu bầu qua thư phải được gửi vào giữa Ngày 2 Tháng 12, Năm 2025 và Ngày 20 Tháng 1, Năm 2026 bằng thư, fax hoặc email đến:
Lưu ý: có hiệu lực từ ngày 1 tháng 12 năm 2017 *- Nếu Đơn Xin Lá Phiếu bầu qua thư được gửi bằng fax hoặc e-mail, đơn xin bản gốc cũng phải được gửi bằng thư đến và nhận bởi Thư Ký Phụ Trách Bỏ Phiếu Sớm không muộn hơn ngày làm việc thứ tư kể từ ngày nhận được bản sao từ fax hoặc e-mail.)*

Early Voting Clerk *(Secretario De Votación Adelantada) (Thư Ký Phụ Trách Bỏ Phiếu Sớm)*
PO Box 961011
Fort Worth TX 76161-0011
Fax: 817-850-2344
Email: votebymail@tarrantcountytx.gov

DRAFT

TARRANT COUNTY
COMMISSIONERS COURT COMMUNICATION

Department: Facilities Management **Prepared By:** Savannah S. Hawk **Approved By:** Jon P. Hendrickson

SUBJECT:

Consideration of a Building Renovation of the Records Room of 350 W Belknap Building for the City of Fort Worth Video Magistrate Court

***** CONSENT AGENDA *****

COMMISSIONERS COURT ACTION REQUESTED

It is requested that the Commissioners Court consider a building renovation for the Records Room located in the basement of 350 W. Belknap to convert a portion of the space for use by the City of Fort Worth Video Magistrate Court.

BACKGROUND

The City of Fort Worth currently leases an area in the basement of the 350 W. Belknap building for its jail and holding cells. The City has requested a renovation that will convert a portion of the existing Records Room into a Video Magistrate Court to support detainee processing. The existing lease will be amended to include this additional space upon project completion.

The scope of work includes minor demolition, installation of impact-resistant walls, doors and hardware, electrical and lighting improvements, and HVAC modifications. The City of Fort Worth will be responsible for all security equipment, data cabling, and device connections necessary to integrate with their systems.

FISCAL IMPACT

Funding in the amount of $35,168.00 is available in the following account:

45400-2026 Capital Improvement/3110301000 350 W Belknap Building/540000 Capital Outlay.

Attachments

Magistrate Court Renovation Back Up Docs.pdf

TARRANT COUNTY

DEPARTMENT OF FACILITIES MANAGEMENT

DATE: October 30, 2025

TO: Tom Stallings – TC FM Director - Interim

FROM: Jon Hendrickson, Assistant Director – Construction Services

RE: 350 Belknap Records room conversion for COFW Magistrate Court Renovation

---

This renovation project is in response to a request for modifications to a portion of the Records Room in the basement of 350 Belknap converting City of Fort Worth Magistrate Court within 350 W Belknap. This renovation will create a secure processing space for COFW Video Magistration. This space includes a space for the video conferencing unit, seating spaces for detainees, phone access, and a security control room. Conduit with pull strings are to be provided for security, data, and video cabling and devices to be provided by COFW. These connect directly back to the COFW systems.

This renovation will be funded from the FY2026 45400 Capital Improvement Fund/3110301000 350 W. Belknap Building / 540000 Capital Outlay.

The total project amount requested is $35,168.00. If approved, this project will commence with physical construction in January 2026 (or sooner) and require approximately 21 days to complete. Completion noted as 3/15/26 to allow for unforeseen conditions which often arise in a jail setting.

1) Does this need to be done – Yes -Specifically requested, Lease to be updated
2) Does the “client” know- Yes
3) Justification: This is a vital process for COFW and would result in greater efficiency.
4) Does this align with the larger scheme of work planning: yes – in functionality for the tenant and efforts to improve both relations and the lease agreement.

Please indicate concurrence of review for submission of the C2C: _____ Init

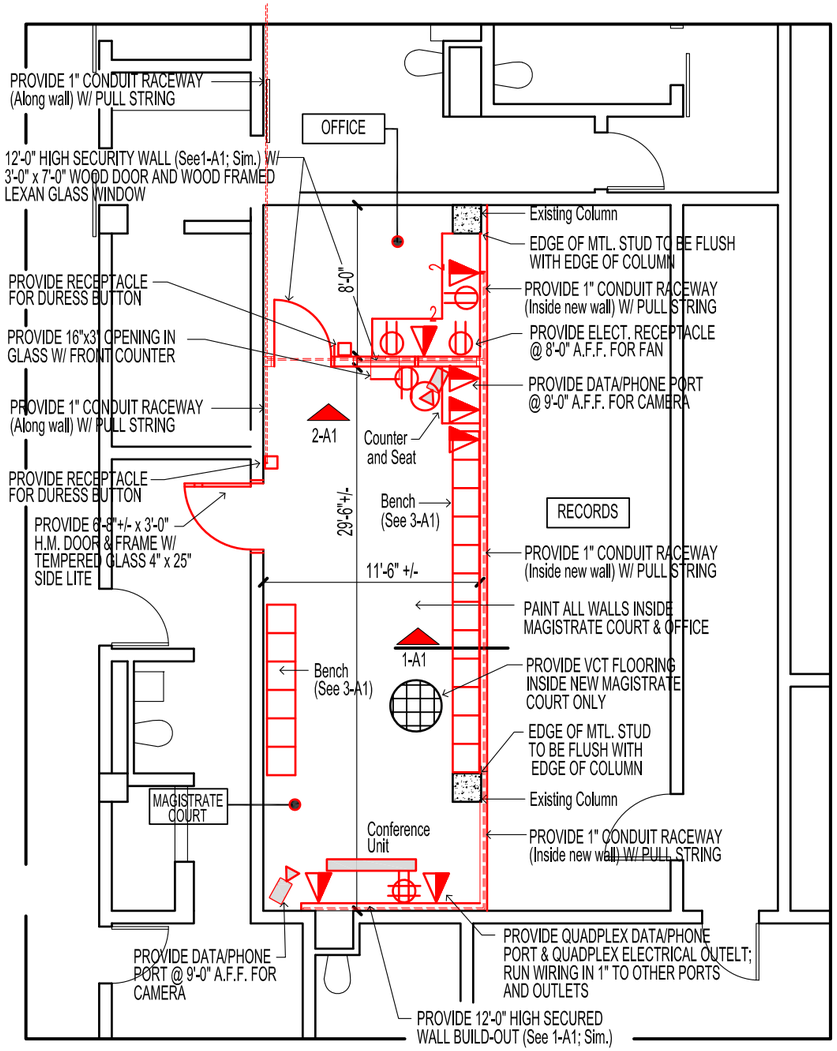

UNLESS NOTED, ALL DATA/PHONE PORTS AND ELECTRICAL RECEPTACLES TO BE BE DUPLEX OUTLETS AND MOUNTED @ 18" A.F.F. TO CENTER.

FLOOR PLAN

NORTH

350 Belknap Building - Basement

SCALE: 1/8"=1'-0"

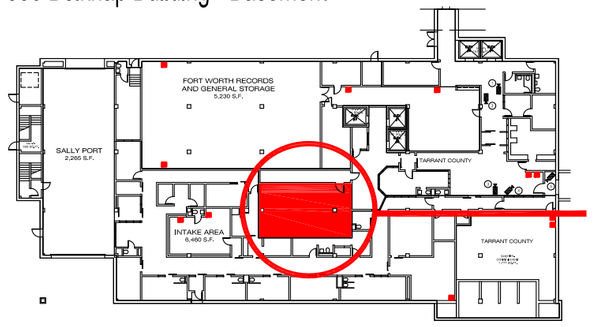

PROJECT LOCATION

Not To Scale

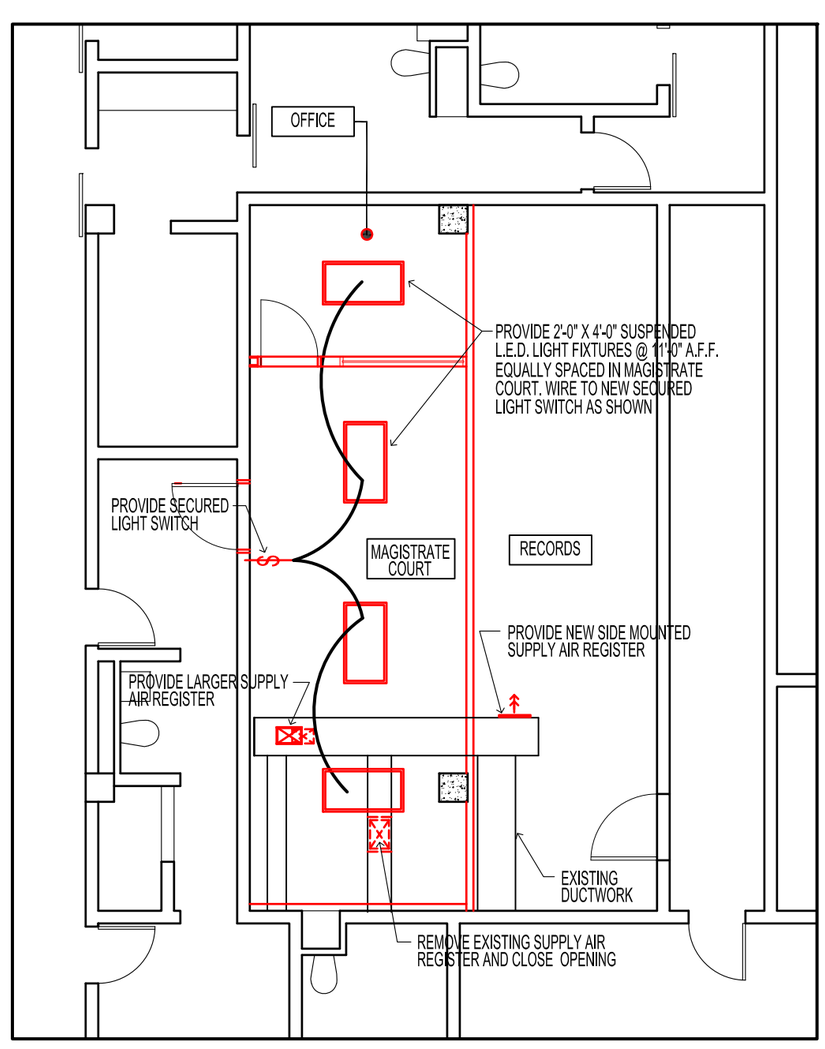

REFLECTED CEILING PLAN

NORTH

350 Belknap Building - Basement

SCALE: 1/8"=1'-0"

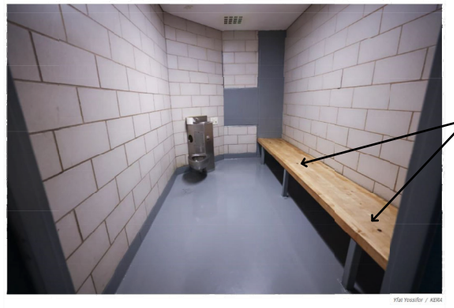

TYPICAL WOOD BENCH TO BE PROVIDED (2 Total); SEAT AT COUNTER TO BE SIMILAR
(1) 18'-0" in Length, Seats 12
(1) 9'-0" in Lenth, Seats 6

TYPICAL BENCH AND SEAT FOR INSTALLATION

Not To Scale

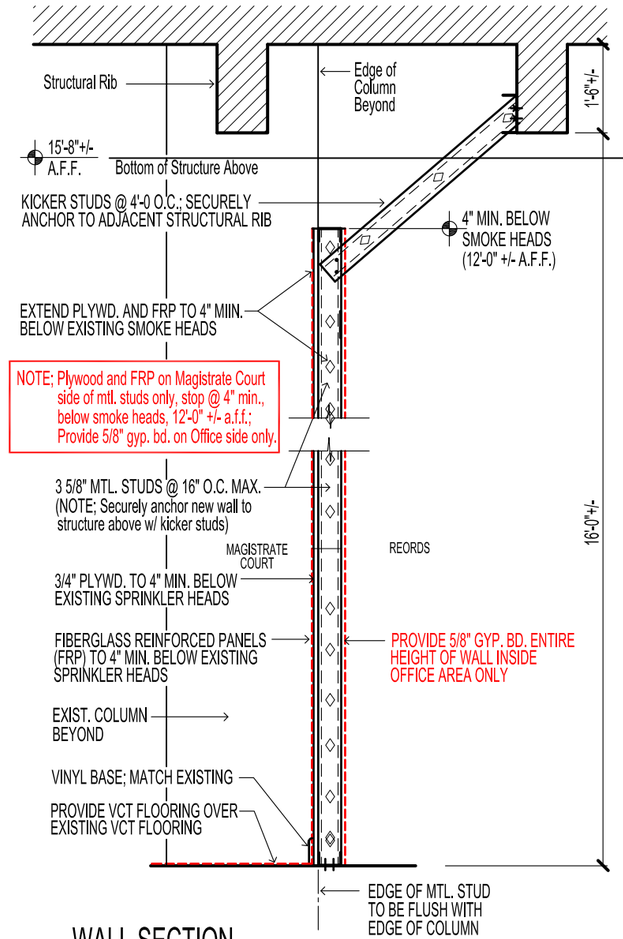

WALL SECTION

SCALE; 1/2"=1'-0"

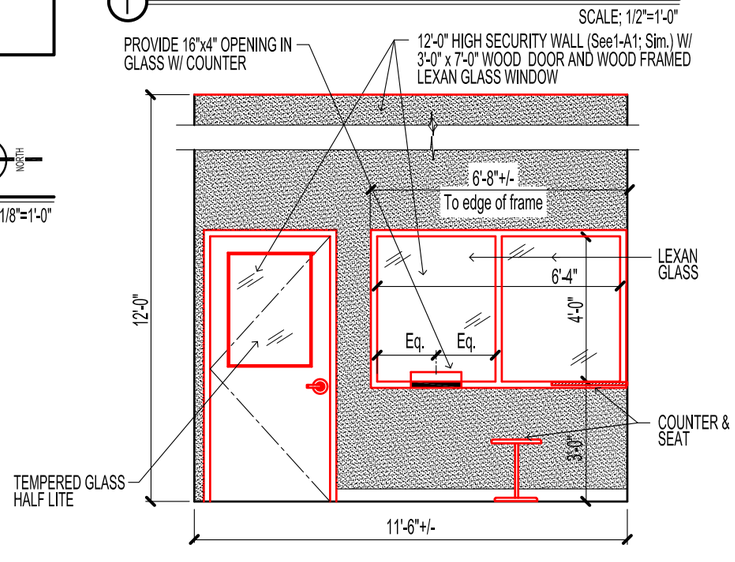

WINDOW ELEVATION

SCALE; 1/4"=1'-0"

TARRANT COUNTY TEXAS

Tarrant County - Facilities Management
Construction Services
100 W. Weatherford St. Room 350
Fort Worth, Texas 76196
p: (817) 884-1502

MAGISTRATE COURT RENOVATION
350 W. BELKNAP - Basement

FLOOR PLAN, REFFECTED CEILING PLAN, WALL SECTION, ELEVATION, TYP. BENCH, LOCATION PLAN

DRAWING NUMBER
350 Belknap Mag Crt Wall

DATE: December 6, 2024

DRAWN BY: H.C.

SHEET NO.
A-1
1 OF 1 SHEETS

350 BELKNAP FORT WORTH MAGISTRATE

Budget Estimate date **10/30/2025**

The budget below is based from the following scope of work:

1. This budget includes a total of 460sf located at address.

3. This budget does not include relocation costs.

4. This budget does not include annual operating costs.

Capital Budget Summary

1. SITE WORK			$	-
2. DEMOLITION / ABATEMENT			$	-
3. CONSTRUCTION COST OF THE BUILDING			$	31,805.42
General Requirements	$	-		
Concrete	$	-		
Gypsum Board Assemblies	$	2,988.04		
Openings	$	6,414.00		
Finishes	$	4,982.28		
Elevator	$	-		
Mechanical Systems	$	4,285.60		
Electrical Systems	$	7,670.00		
Plumbing Systems	$	-		
Special Equipment	$	-		
Low Voltage	$	5,465.50		
General Contractor (1 if bid out, 0 if performed in-house)	$	-		
4. PROFESSIONAL SERVICES			$	-
Pre-design (programming, preliminary drawings, site alternates)	$	-		
Full Architect / Engineering Services (triggered if HC is > $50,000)	$	-		
Lab Design Consultant	$	-		
Geotechnical Survey	$	-		
Phase 1 / 2 Asbetos Surveys	$	-		
Inspections / Testing	$	-		
HVAC - Test and Balance	$	-		
Commissioning - LEED	$	-		
Document Reproduction	$	-		
5. PERMITS & FEES			$	-
6. OCCUPANCY EXPENSES			$	1,687.50
7. OWNER'S CONTINGENCY			$	1,674.65

Tarrant County Facilities Management

TOTAL PROJECT BUDGET : If Self-Perfomred	**$**	**35,167.57**

Cost of Self-Performed Tradesmen **$** **-**

Cost Category	Qty	Unit	Estimate	Section Subtotal	Notes
1. Site Work				$ -	
Utilities - Sanitary Sewer	0.00	lf	$ -		
Utilities - Storm Sewer	0.00	lf	$ -		
Utilities - Irrigation		lf	$ -		
Utilities - Electrical		lf	$ -		
Utilities - Natural Gas		lf	$ -		
Utilities - Fiber Data / Communications		lf	$ -		
			$ -		
2. Demo / Abatement				$ -	
Demolition/ pad protect	0.00	sf	$ -		
Abatement		sf	$ -		
Trash Haul / Cleaning			$ -		
3. Construction			$ -		
General Requirements				$ -	
Safety / Temporary Partitions / protect finishes / logistics	0.00	ls	$ -		
			$ -		
Concrete				$ -	
Saw cut / Demo		sf/ lf	$ -		
Form, Place, Finish		sf/ lf	$ -		
			$ -		
Gyp Assemblies				$ 2,988.04	
Framing	62.00	lf	$ 1,909.60		12' tall framed wall with kicker. 6" studs if money allows
Drywall	384.00	sf surface area	$ 274.56		office and conference unit only
3/4 ply	504.00	sf surface area	$ 803.88		12' tall within magistrate space.
Acoustic Ceilings	0.00	each	$ -		none
level 3 bul resist	0.00	sf surface area	$ -		none
Openings				$ 6,414.00	
Doors, Frames, Hardware	1.00	leaf	$ 3,750.00		new door for control room
hollow doors	1.00	sf	$ 1,800.00		single leaf and hardware at existing frame
Storefront Doors	0.00	leaf	$ -		none
Glass/ Acrylic	96.00	sf	$ 864.00		Acrylic at control room.
Finishes				$ 4,982.28	
Tape, Bed, Plaster	384.00	sf	$ 105.60		
Paint	384.00	sf	$ 844.80		
wall coverings	648.00	sf	$ 1,321.92		FRP 12' tall within magistrate space.
sealed concrete	0.00	sf	$ -		
carpet / cove base	122.00	each	$ 549.00		
VCT	456.00	Sf	$ 984.96		Clean and seal existing
solid surface	0.00	Sf	$ -		none
Millwork	24.00	LF upper/ lower	$ 1,176.00		cantilever counters plam- in Control room
Elevator			$ -	$ -	
New Cab	0.00	cab/ floor	$ -		
Cab Finish Allowance	0.00	cab/ floor	$ -		
			$ -		
Mechanical Systems				$ 4,285.60	
HVAC Units	0.00	tons	$ -		
New VAV's for existing systems	0.00	each	$ -		
Ductwork	0.00	lf	$ -		
New grilles and Regs	0.00	each	$ -		
Materials =10%	1.00	each	$ 1,100.00		HVAC as per plan
Labor- journeymand + helper	16.00	hr	$ 3,185.60		
New Controls (Tstats)		each point	$ -		
Electrical Systems				$ 7,670.00	
Equipment - panels, transformers, diconnects	0.00		$ -		
Wiring/Conduit	0.00	lf	$ -		
devices (outlets, switches)	0.00	each	$ -		
Lighting/Fixtures	0.00	each	$ -		
Materials =10%	1.00	each	$ 2,340.00		electrical as per plan
Labor- journeyman + helper	40.00	hr	$ 5,330.00		
			$ -		
Plumbing Systems			$ -	$ -	
floor penetrations	0.00	each	$ -		
rough-in (piping,fittings, carriers)	0.00	LS	$ -		
Fixtures and Trim	0.00	each	$ -		no plumbing or fire sprinkler adjustments needed
Fire sprinkler	0.00	sf / heads	$ -		
Materials =10%	0.00	each	$ -		
Labor- journeymand + helper	0.00	hr	$ -		
Special Equipment				$ -	
Folding Partitions	0.00	lf	$ -		
toilet partitions	0.00	per fixture	$ -		
toilet accessories	0.00	per fixture	$ -		
fire extinguishers	0.00	each	$ -		
Maintenance Equipment	0.00		$ -		
Spare Parts / Attic Stock	0.00		$ -		
			$ -		
Low Voltage Systems				$ 5,465.50	
Building Systems and Equipment	0.00		$ -		
Data	8.00	locations drops	$ 2,750.00		
Phones	2.00	locations drops	$ 687.50		
Access Control / Security	0.00	relocate	$ -		
Audio / Visual	1.00	locations drops	$ 2,028.00		Open Conduit with Pull strings - cabling and devices by COFW
Hard Cost Construction Subtotal			$ 31,805.42	$ 31,805.42	
General Contractor (1 if bid out, 0 if performed in-house)	0.00		$ -	$ -	
4. Professional Services				$ -	
Pre-design (programming, preliminary drawings, site alternates)	0.00		$ -		
Full Architect / Engineering Services (triggered if HC is > $50,000)	0.00		$ -		
Lab Design Consultant	0.00		$ -		
Geotechnical Survey	0.00		$ -		
Phase 1 / 2 Asbetos Surveys	0.00		$ -		
Inspections / Testing	0.00		$ -		
HVAC - Test and Balance	0.00		$ -		

Commissioning - LEED	0.00		$ -		
Document Reproduction	0.00		$ -		
5. Permits and Fees				$ -	
Texas Accessibility Plan Review and Inspection Fees	0.00		$ -		
City Permit Fees (Certificate of Occupancy)	0.00		$ -		
Impact Fee- Waste and Water	0.00		$ -		
Assessment - Natural Gas Service	0.00		$ -		
Assessment - Electrical Service	0.00		$ -		
			$ -		
6. Occupancy / Move In				$ 1,687.50	
Furnishings, fixtures, and Equipment- Acquisition	0.00	spaces	$ -		
Benches and shelving	25.00	lf	$ 1,687.50		Affixed seating benches and phone call stations.
Furnishings, Fixtures, and Equipment- Move-Out/Move In	0.00	spaces	$ -		no loose furinshings (chairs etc), Monitor and cameras by COFW
			$ -		
			$ -		
			$ -		
Project Subtotal			**$ 33,492.92**	$ 33,492.92	
7. Contingency			$ 1,674.65	$ 1,674.65	
ESTIMATE TOTAL			**$ 35,167.57**	**$ 35,167.57**	

TARRANT COUNTY
COMMISSIONERS COURT COMMUNICATION

Court Date: December 9, 2025	**Court Order #:**	**Page:** 1 of 1
Department: Human Resources	**Prepared By:** Glorimar Lugo Ortiz	**Approved By:** Roxie Held

SUBJECT:

Consideration of Options Regarding the Tarrant County 457(b) Deferred Compensation Plan Agreement with Lincoln Financial Group

COMMISSIONERS COURT ACTION REQUESTED

It is requested that the Commissioners Court consider a recommendation to terminate administrative services with Lincoln Financial Group for the Tarrant County 457(b) Deferred Compensation Plan due to unresolved legal and operational concerns identified by the Criminal District Attorney's Office and Human Resources, including non-compliance with SECURE Act 2.0 requirements.

BACKGROUND

Tarrant County ("County"), as Plan Administrator of the Tarrant County 457(b) Deferred Compensation Plan, issued notice to Lincoln Financial Group ("Lincoln") of its intent to recommend termination of the existing agreement for administrative services. The notice was provided after multiple unresolved legal and operational concerns were identified by the Criminal District Attorney's Office and Human Resources.

The County had planned to migrate to Lincoln's newer platform to enable Roth functionality; however, unresolved issues within the proposed Administrative Services Agreement ("ASA") prevented execution. The Criminal District Attorney's Office identified provisions in the ASA that remain unacceptable, including:

- Language expanding Lincoln's access to County employee information beyond plan participants;
- Provisions assigning liability to the County for certain data or information errors; and
- Governing law references inconsistent with Texas law, as required for County contracts.

In addition, the County identified operational issues unique to Lincoln's administration of the Plan that have not occurred with the County's other approved 457(b) vendors, both of which already operate on modern platforms that:

- Provide full employer administrative access;
- Allow employees to enter their own data and make contribution changes; and
- Offer active Roth 457(b) functionality in compliance with SECURE Act 2.0 requirements effective January 1, 2026.

Lincoln's current platform remains outdated and paper-based, lacks Roth functionality, and limits the County's administrative oversight and reporting capabilities.

Human Resources is presenting the following options for Court consideration:

1. Transfer all participant accounts from Lincoln Financial to another approved 457(b) vendor. Lincoln has indicated surrender charges would apply, previously estimated at $47,784.42 as of September 30, 2025, with the final amount subject to increase based on the effective termination date.

2. Discontinue new contributions to Lincoln Financial beginning January 1, 2026, while allowing participants to maintain existing accounts or voluntarily transfer funds to another approved vendor as a plan-to-plan transfer.

FISCAL IMPACT

If the Court elects to transfer all participant accounts from Lincoln Financial to another approved 457(b) vendor, Lincoln has estimated potential surrender charges of approximately $47,784.42 as of September 30, 2025; this amount may increase depending on the final effective termination date.

TARRANT COUNTY
COMMISSIONERS COURT COMMUNICATION

Court Date: December 9, 2025	**Court Order #:**	**Page:** 1 of 30
Department: Purchasing	**Prepared By:** Kehinde Olugbile	**Approved By:** Christopher Lax, CPSM, CPSD, CPCP

SUBJECT:

RFP No. F2025179 - Annual Contract for Audio Transcription Services - Sheriff's Office - Athreon Corporation - Per Contract Terms

COMMISSIONERS COURT ACTION REQUESTED

It is requested that the Commissioners Court award RFP No. F2025179, Annual Contract for Audio Transcription Services, for the Sheriff's Office, to Athreon Corporation at the per contract terms and approve contract.

BACKGROUND

Notice of the County's intent to bid was advertised in a local newspaper, as required by State statute, and posted on the Internet, the Arlington Black Chamber of Commerce, the Fort Worth Hispanic Chamber of Commerce, the Fort Worth Metropolitan Black Chamber of Commerce, and the Tarrant County Asian American Chamber of Commerce. Four hundred ninety-six (496) vendors were contacted and requested to participate in this proposal process. All documents pertaining to this RFP were posted on the Tarrant County website and were downloaded by interested parties. A pre-proposal conference held on June 7, 2025 was attended by eight (8) vendors as well as representatives from the Sheriff's Office and Purchasing. Nine (9) proposals and one (1) no-bid were received.

Proposals were evaluated by the Sheriff's Office and Purchasing representatives. Evaluations were based upon the criteria and processes set forth in the RFP.

Capital Typing and Transcript Plus, LLC were deemed non-responsive for failure to meet the mandatory security requirement.

A Best and Final Offer was then requested from Athreon Corporation which resulted in a total price reduction of $3,528.00.

The proposal received from Athreon Corporation meets all specifications and is acceptable to the Sheriff's Office.

The term of the contract is twelve (12) months, effective December 9, 2025.

Subject to continued funding by the Commissioners Court, this agreement shall automatically renew December 16, 2026 and December 16, 2027, hereafter for two (2) twelve (12) month periods ending on December 16, 2028 unless sooner terminated by either party as provided herein.

The purpose of this contract is to provide the Sheriff's Office with a secure, mobile-based solution for recording investigative interviews and transcribing recorded statements.

Therefore, it is the joint recommendation of the Sheriff's Office and Purchasing that RFP No. F2025179, Annual Contract for Audio Transcription Services, be awarded to Athreon Corporation at the per contract terms.

The contract is attached for approval and signature. The District Attorney's Office reviewed this contract as to form.

FISCAL IMPACT

This is a new contract with no expenses for the last twelve (12) months. Funding in the amount of $32,424.00 is available in account 1000-2026 General Fund/ 2110410000 SO Investigations/ 522069 Subscriptions.

PASSED AND APPROVED on December 9, 2025.

COUNTY OF TARRANT
STATE OF TEXAS

By: Separate Electronic Signature Page
Tim O'Hare
County Judge

APPROVED AS TO FORM:

_____
District Attorney's Office*

*By law, the District Attorney's Office may only approve contracts for its clients. We reviewed this document as to form from our client's legal perspective. Other parties may not rely on this approval. Instead, those parties should seek contract review from independent counsel.

Attachments

F2025179 Backup.pdf

RFP No. F2025179 Annual Contract for Audio Transcription Services
Best and Final Offer

		Award
Evaluation Criteria	Max Points	**Athreon Corporation Indianapolis, IN HUB - No CO-OP - Yes**
Qualifications and Experience	250	**196**
Response to requirements	300	**243**
References	100	**81**
Price	350	**249**
Total Score	1000	**769**

No-Bids: Texas Pipeline Services

Notes: Capital Typing and Transcript Plus, LLC were deemed non-responsive for failure to meet our madatory security requirement

RFP No. F2025179 Annual Contract for Audio Transcription Services

Award

Evaluation Criteria	Max Points	**Athreon Corporation Indianapolis, IN HUB - No CO-OP - Yes**	Ditto Transcripts Denver, CO HUB - No
Qualifications and Experience	250	**196**	161
Response to requirements	300	**243**	156
References	100	**81**	62
Price	350	**240**	160
Total Score	1000	**760**	539

Evaluation Criteria	Max Points	DocuScript, LLC Camp Hill, PA HUB - No	Flix Translations Group LLC Coral Gables, FL HUB - No
Qualifications and Experience	250	160	153
Response to requirements	300	177	197
References	100	36	0
Price	350	322	350
Total Score	1000	695	700

RFP No. F2025179 Annual Contract for Audio Transcription Services

Evaluation Criteria	Max Points	Northland Business Systems Burnsville, MN HUB - No	Resolute Documentation Services Westlake Village, CA HUB - No
Qualifications and Experience	250	149	141
Response to requirements	300	173	171
References	100	4	12
Price	350	80	251
Total Score	1000	406	575

Evaluation Criteria	Max Points	Voice Products, Inc. Wichita, KS HUB - No
Qualifications and Experience	250	93
Response to requirements	300	170
References	100	32
Price	350	199
Total Score	1000	494

No-Bids: Texas Pipeline Services

Notes: Capital Typing and Transcript Plus, LLC were deemed non-responsive for failure to meet our madatory security requirement

RFP F2025179
RFP for Annual Contract for Audio Transcription Services

Athreon Corporation

Rate Sheet

Line Item	Price
Year 1 Price	$32,424.00
Year 2 Price	$32,424.00
Year 3 Price	$32,424.00
Total	$97,272.00

TARRANT COUNTY

OFFICE OF THE SHERIFF

Bill E. Waybourn
Sheriff
817/884-3098
Fax: 817/212-6987

PLAZA BUILDING
200 TAYLOR STREET
SEVENTH FLOOR
FORT WORTH, TEXAS 76196

November 7, 2025

TO: Kehinde Olugbile
Senior Buyer

RE: Award Recommendation

After evaluation of the responses received for RFP F2025179, Annual Contract for Audio Transcription Services, Tarrant County Sheriff's Office recommends award to:

Primary Award: Athreon Corporation

C. Driskell

Executive Chief Craig Driskell



EXHIBIT C - GENERAL TERMS AND CONDITIONS

These General Terms and Conditions ("General Terms") apply to any order form, purchase order, statement of work, change order, work request, end-user licensing agreement, and similar document (such documents together with these General Terms are hereinafter referred to as an "Agreement") entered into by Athreon Corporation (hereinafter referred to as "Athreon") and any buyer of goods or services or licenses of software from Athreon (hereinafter referred to as "Tarrant County") (each a "Party" and collectively the "Parties").

These General Terms and Conditions become binding upon execution of a contract, purchase order, or written agreement between Tarrant County and Athreon, or upon Tarrant County's submission of a service request or order referencing these terms. The individual signing on behalf of Tarrant County represents that they have the authority to bind Tarrant County to this Agreement in accordance with applicable procurement or contracting authority.

Definitions: As used in this Agreement, the following defined terms have the meanings indicated below.

"Access Credentials" means any username, identification number, password, license or security key, security token, PIN or other security code, used alone or in combination to verify an individual's identity and authorization to access and use the Software and/or Service.

"Athreon Systems" means the information technology infrastructure, including all computers, software, hardware, databases, electronic systems (including database management systems) and networks, whether operated directly by Athreon or through third-party services, used by Athreon in providing Service or Software.

"Authorized User" means each of the individuals employed or engaged by Tarrant County at a Facility with appropriate Access Credentials to the Software and/or Service.

"Captions" mean text derived from the audio content of Media Files that includes not only dialogue but also other auditory information such as sound effects, music, and speaker identification, which are essential for understanding and accessing the media. Captions are intended primarily for viewers who are deaf or hard of hearing, ensuring compliance with accessibility standards.

"Character" means the metric used to determine charges for a Service, as determined by the Platform. A Character is defined as any letter, number, symbol or function key necessary for the final appearance and content of a Transcript, including the space bar, carriage return, underscore, bold, italics, and any Character contained within a template, header, or footer that is either typed by the transcriptionist or created by the Platform.

"CJIS Compliance" means, to the extent applicable, the Parties shall comply with the FBI Criminal Justice Information Services (CJIS) Security Policy, including all requirements regarding the access, use, protection, and transmission of Criminal Justice Information (CJI).

"Tarrant County Systems" means Tarrant County's information technology infrastructure, including computers, software, hardware, databases, electronic systems (including database management systems) and networks, whether operated directly by Tarrant County or through third-party services.

"Data" means the information, in any form or medium, received by Athreon from Tarrant County or an Authorized User under an Agreement.

"Documentation" means any user guide provided by Athreon to Tarrant County to facilitate the use of Athreon Systems.

"Facility" means any Tarrant County location where the Service is accessed or Products are implemented under an Agreement.

"File" means any digital deliverable transmitted from Athreon to Tarrant County, encompassing but not limited to Transcripts, Translations, Subtitles, and Captions. Each File is the result of specific processing, as requested by Tarrant County. Files are prepared to meet the agreed-upon specifications detailed in the Order Form or Statement of Work and may include text-based documents, audio files, video files, or other media formats.

“Gross Line” means the metric used to determine charges for a Service, as determined by the Platform. A Gross Line is any line on the Page that is comprised of one or more Characters. There is no distinction between full or partial Gross Lines.

“Hour” means the metric used to determine charges for a Service, as determined by the Platform. A fractional portion of an Hour is rounded up to the next whole Hour for billing purposes.

"Intellectual Property Rights" means any and all rights under patent law, copyright law, trade secret law, trademark law, and any other proprietary rights.

“Line” means the metric used to determine charges for a Service, as determined by the Platform. A Line is comprised of Characters. The number of Lines in a Transcript is calculated by dividing the number of Characters in the Transcript by the number specified in the Order Form (hereinafter “Characters per Line” or “CPL”) and rounding any fractional portion up to the next integer.

"Master Agreement" means the agreement formed by the combination of the Order Form, these General Terms and Conditions, any attached or incorporated Statements of Work (SOWs), and any applicable Exhibits, including but not limited to the Service Level Agreement (SLA), CJIS Security Addendum, or HIPAA Business Associate Agreement (BAA), if applicable.

"Media File" means an electronic copy of an audio or video recording or a scanned document or text-based file to be transcribed.

“Minute” means the metric used to determine charges for a Service, as determined by the Platform. A fractional portion of a Minute in a Media File is rounded up to the next whole Minute for billing purposes. Minutes of recording in a Media File where no spoken audio exists are billable.

"Order Form" means a written document that specifies the terms for a transaction between the Parties for specific products or services. If Tarrant County uses the Service without a current Order Form in place, Athreon’s then-current Service rates and policies apply.

“Page” means the metric used to determine charges for a Service, as determined by the Platform. A Page is a portion of a Transcript or Translation as specified on an Order Form.

"Platform" means software technology (either owned or directly licensed by Athreon or by a third party) used by Athreon to deliver the Service.

"Privacy Laws" means collectively the Health Insurance Portability and Accountability Act of 1996 and the regulations promulgated thereunder ("HIPAA"), the Health Information Technology for Economic and Clinical Health Act and the regulations promulgated thereunder ("HITECH"), and any similar state laws and the regulations promulgated thereunder ("State Privacy Law").

"Products" means any Software Tarrant County purchases or is granted a license to under an Agreement.

"Service" means the comprehensive set of services provided by Athreon and purchased by Tarrant County that accomplishes the complete transcription or translation of Media Files or Source Files into Data utilizing the Platform or Third-Party Software. Athreon may as necessary and at its discretion, in accordance with the services procured by Tarrant County, utilize various hardware, proprietary Software, Third-Party Software, and labor to implement the Service and related services. The Service is provided virtually, from an offsite location, not at Tarrant County's Facility.

"Software" means Athreon-branded software applications, including any maintenance releases and the appropriate user guide.

"Source File" means an electronic copy of an audio or video recording or a scanned document or text-based file to be translated.

"Statement of Work" means a formal document, approved by both Parties, used to guide execution and control in rendering the Service. The primary uses of the Statement of Work are to document planning assumptions and decisions, facilitate communication among stakeholders, and to document approved scope, cost, and schedule baselines.

"Subtitles" mean text derived from the audio content of Media Files primarily intended for viewers who do not speak the language of the audio. They translate the dialogue and other vocal content only, without additional auditory information like music or sound effects unless crucial for understanding the context.

"Summarization" means a service provided by Athreon that involves condensing the content of documents, Media Files, or other Tarrant County Data into a shorter form while retaining key information and overall meaning. This service utilizes advanced artificial intelligence technology, human expertise, or a combination of both to extract essential points and present them in a coherent summary format. Summarizations are intended to assist Tarrant County in understanding complex information quickly and efficiently, making it ideal for processing large volumes of text, reports, meetings, and other informational content.

"Third-Party Software" means any third-party proprietary software.

"Transcript" means a textual representation of spoken words and non-verbal sounds transcribed or edited (as applicable) by Athreon from Media Files. Transcripts are delivered to Tarrant County through the Platform or Third-Party Software.

"Translation" for the purposes of this Agreement means a Translation or any other Translation-related tasks such as transcreation, editing (revision and review), proofreading, and similar, that require the skills of a translator.

"Turnaround Time" means the maximum permissible elapsed time between the moment a Media File or Source File is received by Athreon to the moment the Transcript or Translation is delivered to Tarrant County.

“Word” means the metric used to determine charges for a Service, as determined by the Platform. A Word is a single element of text, comprised of one or more Characters, that appears with a space on either side.

1. **Relationship of Parties**: Tarrant County is engaging Athreon as an independent contractor to provide the Service. Nothing contained in this Agreement, nor in the relationship created thereby, shall be interpreted to evidence a joint venture, partnership or principal-agent relationship between Athreon and Tarrant County. Neither Party shall have any right or authority to act on behalf of, or incur any obligation for, the other Party.
2. **Scope of Agreement**: Subject to the terms and conditions of this Agreement, Athreon agrees to provide to Tarrant County its Service. Tarrant County shall make Media Files or Source Files available for transcription or translation, and Athreon shall supply Transcripts or Translations to Tarrant County through the Platform or Third-Party Software. Athreon reserves the right to reject Media Files or Source Files that are incomplete, corrupted, non-compliant with agreed specifications, or that pose a security or processing risk, subject to timely notice and coordination with Tarrant County.
    a. Tarrant County Obligation: Tarrant County at its sole cost and expense shall procure and maintain the Internet connections and other telecommunications facilities it requires in the performance of this Agreement, including without limitation, all Data circuits, and telephone lines and recording devices required to capture and transmit Media Files and Source Files to Athreon.
    b. Turnaround Time: Any delivery date(s) agreed to in advance between Athreon and Tarrant County become(s) binding only after Athreon has received and reviewed the Media Files or Source Files and Tarrant County's instructions, and both parties have agreed in writing on the project specifications in an Order Form or Statement of Work. Unless otherwise agreed, Tarrant County can reasonably expect to receive completed Transcripts or Translations within the agreed-upon timeframe specified in the Order Form or Statement of Work unless otherwise impacted by Force Majeure, Tarrant County delays, or security review requirements.
    c. Turnaround Time Exceptions: Turnaround Time may be extended if the quality of the Media File or Source File is poor and additional time is required to produce a Transcript or Translation; or if Athreon is awaiting deliverables from Tarrant County to complete a Transcript or Translation. Turnaround Time delays do not entitle Tarrant County to a discount.
    d. Distribution/Delivery: Athreon will return Transcripts and Translations to Tarrant County via the Platform. Alternate secure delivery methods may be used upon mutual agreement or to comply with agency-specific security protocols.
3. **License Grant**:
    a. Subject to the terms of this Agreement, Athreon grants Tarrant County a limited, revocable, non-transferable, non-exclusive license to connect to and to use the Service during the Term for its internal business purposes. Tarrant County is granted no rights to the Service except those rights specified in this Agreement. Tarrant County agrees that Athreon or other third parties own all legal right, title, and interest in and to the Service, including any Intellectual Property Rights therein. Athreon reserves all rights not expressly granted to Tarrant County.

b. Except as expressly permitted in this Agreement, Tarrant County shall not (a) copy, modify, adapt, reverse engineer, decompile, disassemble, or create derivative works of the Service; (b) redistribute, sublicense, lease, rent, sell, loan or otherwise transfer the use and connection of the Service to any third party; (c) copy or otherwise reproduce the Service; or (d) attempt to disable or circumvent any security mechanisms used by the Service or any applications running on the Service. Tarrant County shall not re-sell, redistribute, or re-package the Service to a third party.

4. **Quality Control:**
   a. Scope: The Service will be performed in a competent, timely, and professional manner and in accordance with industry best practices. Transcripts and Translations will be proofread at the discretion of Athreon using Athreon's then-current style guide.
   b. Liability: Athreon will make commercially reasonable efforts to ensure the accuracy of Transcripts and Translations. However, Athreon does not guarantee that all output will be error-free and shall not be liable for incidental, indirect, or consequential damages arising from the use of such output, except to the extent caused by Athreon's gross negligence or willful misconduct. Each party shall be responsible for its own actions and omissions in connection with the Services. Neither party shall indemnify the other except as may be required under applicable law or stated in a mutually executed agreement.
   c. Transcript and Translation Review Responsibility: Tarrant County understands that minor inaccuracies may occur and agrees that it is responsible for reviewing and confirming the accuracy of Transcripts and Translations before using or relying on them. Athreon does not provide legal, medical, law enforcement, financial, or other advisory services, and the Service is not a substitute for Tarrant County's professional judgment or independent verification procedures. Tarrant County's (including its employees, contractors, and agents) use of the Service does not absolve Tarrant County of its obligation to exercise independent judgment in rendering its services to its clients. Between Athreon and Tarrant County, the professional duty to Tarrant County's client lies solely with Tarrant County. Any reliance upon the Service shall not diminish Tarrant County's responsibility for services rendered. Tarrant County agrees to promptly review Transcripts and Translations received from Athreon and notify Athreon within seven (7) days of any requested corrections or revisions.
   d. Changes to Translations by Tarrant County or Others: Athreon understands and agrees that Tarrant County or Tarrant County's designate may, at Tarrant County's discretion, edit and/or proofread Athreon's work as part of Tarrant County's quality-assurance efforts. Athreon shall have no responsibility whatsoever for any changes made in a Translation by anyone other than Athreon.
5. **Copyright**: Upon Tarrant County's remittance of payment, the Transcripts or Translations become the property of Tarrant County. Athreon has no obligation to take any steps to protect any copyright, trademark, or other right of Tarrant County with respect to transcriptions or translations. Notwithstanding the foregoing, Athreon shall have the right to retain file copies of Source Files and Translations in accordance with Section 4D.
6. **Retention of Athreon for Legal Assistance**: If Tarrant County, acting as legal counsel for an end-client, retains Athreon to assist in representing and advising the end-client in specified matters, Athreon commits to performing services ordered in compliance with United States v. Kovel, 296 F.2d 918 (2d Cir. 1961) and in accordance with the work product doctrine. Services provided by Athreon under the direction of Tarrant County are integral to the legal advice or litigation support provided to the end-client, including but not limited to, the handling of documents and communications deemed privileged or confidential within the scope of attorney-client communication or attorney work product.
   a. Confidentiality and Handling of Privileged Information
      i. Confidentiality of Information: "Confidential Information" includes all administrative, technical, financial, trade secret, or other private information disclosed by Tarrant County or end-client to Athreon, not generally available to the public. This includes, without limitation, information marked as 'privileged', attorney-client communications, or attorney work product, and documents bearing equivalent designations under applicable privilege rules. Athreon shall maintain the confidentiality of such information, employing security measures at least as restrictive as those used for its own confidential information, or as mandated by law. Except as required by law or as permitted by this Agreement, Athreon shall not disclose Confidential Information to any third party without Tarrant County's prior express written consent.
7. **Privacy & Security**:
   a. Confidentiality: To the extent permitted by law, neither Party will at any time disclose or use, either during or subsequent to the Term of this Agreement, any information, knowledge or data which is received or developed during the Term of this Agreement which is considered proprietary or confidential by a Party or which relates to the trade secrets of a Party ("Confidential Information"). Such Confidential Information, knowledge or data includes the following which is by example only: Tarrant County Media Files and Source Files, Athreon's Transcripts and Translations of Tarrant County's Media Files and Source Files, all patient information and data, processes, know-how, designs, formulas, test data, accounting or financial data,

pricing or salary data, marketing data, business plans and strategies, negotiations and contracts, research, customer or vendor lists, inventions, and discoveries. All data received by a Party from the other Party will be deemed Confidential Information. No Confidential Information will be distributed or sold to any third parties. Unless required by law, or as provided for in the Section 15, neither Party will disclose either Party's company identity, business information, pricing structure, or contract contents without prior knowledge and permission from the other Party. This Section of this Agreement will survive the termination of this Agreement and remain binding upon the Parties and any legally authorized successors, subject to applicable law. This Section extends the confidentiality obligations as detailed in the 'Confidentiality and Handling of Privileged Information' Section 6(a), recognizing the privileged nature of documents and communications entrusted to Athreon by Tarrant County or end-client.

b. Data Policy: These General Terms adopt and incorporate Athreon's Data Policy.
c. Encryption: All Confidential Information transferred by Athreon over public networks will be encrypted using industry-standard protocols, including a minimum of TLS 1.2 with 256-bit encryption or FIPS 140-2 compliant mechanisms, where applicable. Athreon offers and recommends encryption related to the transmission of Data for the provision of its Services. If Tarrant County does not use encryption, Tarrant County is responsible for any and all resulting liability caused by failing to encrypt such information.
d. Software Access: Access to Tarrant County Data will be granted to Athreon staff on a "need-to-know" basis as determined by role-based job duties. Access will be restricted by Access Credentials.
e. Physical Access: Athreon's offices will remain locked down, granting access to only authorized employees and escorted guests.
f. Data Management: Media Files and Source Files provided to Athreon by Tarrant County will be retained for the period necessary to render the Service, after which files may be purged in accordance with Athreon's data retention schedule or upon Tarrant County's request. Subsequently, the Media Files, Source Files, Transcripts, and Translations may be purged from Athreon Systems. For the avoidance of doubt, Athreon has no obligation to retain any Media Files, Source Files, Transcripts, Translations, or Data following the termination or expiration of this Agreement. Tarrant County is responsible for making and maintaining backup copies of any Media Files, Source Files, Transcripts, Translations, and Data in its Tarrant County Systems.
g. Inspection Rights: Athreon Systems will maintain an audit trail of each Media File and Source File received by Athreon from Tarrant County. Athreon shall have the right to inspect Tarrant County's use of the Service to confirm such use is in compliance with an Agreement. Tarrant County shall provide reasonable assistance and access to information in the course of such inspection. Tarrant County shall be responsible for the failure of any person or entity receiving Service consistent with an Agreement.
h. Security: Each Party shall maintain up-to-date antivirus software and firewall protections on all systems used to access or transmit Data in connection with the Service.
i. Usernames: Registration as an Authorized User for access to the Service may require both a username and password or adherence to other particular access requirements as designated by Athreon. Only one user may use such user's username and password and, thus, one account. By limiting access, it helps prevent unauthorized usage by other persons, institutions, or entities because anyone with knowledge of both a username and password may gain entry to the Service. Accordingly, by using the Service, Tarrant County agrees to consider usernames and passwords as Confidential Information and to keep usernames and passwords confidential. Tarrant County also agrees not to use another user's username and password. Tarrant County will immediately notify Athreon if Tarrant County becomes aware of any loss or theft of a password or any unauthorized use of Tarrant County's username and password. Athreon cannot and will not be liable for any loss or damage arising from Tarrant County's failure to comply with these obligations. Athreon reserves the right to delete or change a username or password at any time and for any reason. Notwithstanding the foregoing, nothing herein shall convey to Tarrant County any further rights in the Service.

8. **IT Consultants**: Athreon shall have the right to provide Tarrant County's Confidential Information to its consultants, contractors or cloud service providers (each an "IT Consultant") that (a) assist with the maintenance and support of computing infrastructure, or (b) provide additional Data processing, storage or remote recognition resources or systems. Each IT Consultant shall agree in writing to obligations of confidentiality relative to Tarrant County's Confidential Information that are no less stringent than those Athreon is bound to in this Agreement.
9. **LIMITATION OF LIABILITY AND DAMAGES**:
    a. **Limitations of Damages**: To the extent permitted by applicable law, neither Party shall be liable to the other for any indirect, incidental, special, or consequential damages, including loss of profits or data, arising out of or in connection with the performance or non-performance of this Agreement, except to the extent such damages result from gross negligence, willful misconduct, or breach of confidentiality obligations by the liable Party.

b. **Limitation of Liability**: Athreon's total cumulative liability to Tarrant County for any and all claims arising under this Agreement shall not exceed the total amount paid by Tarrant County to Athreon under the applicable Order Form in the twelve (12) months preceding the event giving rise to the claim. This limitation shall not apply to claims arising from:
    i. breach of confidentiality or data protection obligations,
    ii. gross negligence or willful misconduct,
    iii. or third-party claims for which indemnification is provided (if any such clause is later included).
c. **Insurance:** Upon request, Athreon shall provide proof of current insurance coverage, including Professional Liability Insurance and Cyber Liability coverage. If Tarrant County requires specific policy endorsements or additional coverage not already in place, the Parties shall discuss those needs in good faith. Costs associated with such additional coverage, if required solely for this engagement, will be subject to mutual agreement before any additional cost is incurred by Tarrant County.

10. **Payment**:
    a. Payment Remittance: All payments are due as specified on an invoice or Order Form or Statement of Work, in accordance with the Texas Prompt Payment Act.
    b. Reimbursement: Tarrant County shall reimburse Athreon for out-of-scope expenses only when such expenses are (i) pre-approved in writing by Tarrant County and (ii) necessary to fulfill specific Tarrant County requests outside the scope of the Service. Such expenses may include, but are not limited to, notarization or certification requests.
    c. Late Fees: In the event payments are not received after becoming due, Athreon may (a) charge a late fee and/or (b) suspend performance for the Service and/or access to Products/Athreon Systems until payment has been made (hereinafter "Suspended Account"). Once the Suspended Account becomes current, Athreon will resume Service and/or access to Products/Athreon Systems, but Athreon will not be responsible for meeting its Turnaround Time commitment specifically for Media Files or Source Files submitted during the Suspended Account period, nor shall Athreon be liable for any damages whatsoever resulting from this delay. However, Athreon will make reasonable efforts to promptly complete all pending work previously received during the Suspended Account period. Any such fees shall be assessed only to the extent permitted by applicable law and Tarrant County's procurement regulations.
    d. Disputed Charges: In the event of a payment dispute, Tarrant County shall deliver a written statement to Athreon no later than fifteen (15) days from the date on the invoice providing a reasonably detailed description of each disputed item. Amounts not so disputed within fifteen (15) days shall be deemed accepted and shall be paid, notwithstanding disputes on other items. The Parties shall seek to resolve all such disputes expeditiously and in good faith.
    e. Unaccepted Payments: Payments to Athreon from Tarrant County that are not accepted owing to insufficient funds, chargebacks, or bounced checks will incur a forty dollar ($40.00) fee per incident. Additionally, unpaid balances are subject to late fees per Section 10C. This provision applies only where consistent with Tarrant County's payment method and applicable procurement regulations.
    f. Taxes: Tarrant County shall be responsible for any taxes that it is legally obligated to pay under applicable federal, state, or local laws. Nothing in this Agreement shall require Tarrant County to pay or reimburse Athreon for taxes based on Athreon's income, gross receipts, or personnel, or for taxes from which Tarrant County is legally exempt.
    g. Arrears: In the event Athreon turns Tarrant County's account over to an attorney or collection agency, Tarrant County will pay Athreon all collection costs, attorney's fees, legal costs, and any fees incurred by Athreon that are associated with the attempts to collect the outstanding balances owed by Tarrant County to Athreon. This clause shall be subject to applicable procurement rules, and costs may only be recovered where permitted under law or contract.

11. **Term**: This Agreement will commence on the Effective Date identified in the mutually executed contract, purchase order, or Order Form and will continue for the duration specified therein, unless terminated in accordance with the terms below and subject to applicable government contracting regulations.
    a. Termination for Convenience. Tarrant County may terminate this Agreement as a matter of convenience, upon written notice of at least thirty (30) days. In the event of termination for convenience, Tarrant County shall remain responsible for payment of all undisputed fees for Services rendered up to the effective date of termination.
    b. Effect of Termination or Expiration. Upon expiration or termination of the Agreement, Tarrant County shall cease using the applicable Service. Termination or expiration shall not relieve either Party of obligations incurred prior to the termination date. Tarrant County shall remain responsible for payment of undisputed fees for Services rendered up to the date of termination, subject to applicable local, state, or federal procurement regulations.
    c. **Athreon Personnel**: Tarrant County agrees not to directly solicit Athreon personnel assigned to this project for employment during the term of the Agreement and for twelve (12) months following its conclusion,

except through a publicly advertised hiring process or with Athreon's prior written consent. This clause does not prohibit Tarrant County from hiring individuals who independently apply for publicly posted roles. Both parties acknowledge the importance of maintaining a stable project team; however, this clause shall not create a penalty or impose financial liability on Tarrant County for lawful employment decisions in accordance with applicable government policies.

12. **Conflict Resolution & Venue**: If any controversy, dispute, or claim arises between the Parties with respect to this Agreement, the Parties will make good faith efforts to resolve such matters informally. This Agreement shall be governed by the laws of the state in which Tarrant County operates. Venue for any dispute shall lie in the appropriate court in that state. If any portion of this Agreement is declared invalid or unenforceable by order of a court of competent jurisdiction, said portion will be struck from this Agreement, and the remainder of this Agreement will remain valid.
13. **Ownership**: Except for any limited licenses granted pursuant to the License Grant above, the terms of the Agreement do not convey any ownership or other rights of any kind to Tarrant County in or to any Software accessed by Tarrant County. Athreon, as between Athreon and Tarrant County, shall own all right, title and interest in and to all Software (including, without limitation, all updates, upgrades, improvements, enhancements, and/or custom features and functions) and all patents, copyrights and other Intellectual Property Rights therein.
14. **Force Majeure**: Neither Party shall be responsible for delays or failure in performance resulting from acts beyond the control of such Party, including without limitation, acts of God, strikes, lockouts, riots, acts of war, acts of terrorism, epidemics, pandemics, fire, communication line failures, power surges or failures, earthquakes or other disasters.
15. **Publicity**: Neither Party shall issue any announcement, statement, press release or other publicity or marketing materials relating to an Agreement or otherwise use the other Party's trademarks, service marks, trade names, logos, domain names or other indicia of source, affiliation or sponsorship, without the prior written consent of the other Party, which consent shall not be unreasonably withheld, conditioned or delayed; provided, however, that Athreon may, without Tarrant County's consent, include Tarrant County's name and/or other indicia in its lists of Athreon's current or former customers. Athreon shall not include Tarrant County's name, seal, or logo in any promotional or marketing materials without prior written consent.
16. **Suggestions**: If Tarrant County elects to provide or make available to Athreon any suggestions, comments, ideas, improvements, or other feedback relating to the Service (hereinafter "Suggestions"), Tarrant County hereby grants Athreon a perpetual, irrevocable, worldwide, royalty-free, fully-paid-up, non-exclusive, sublicensable, transferable license to use, reproduce, modify, adapt, create derivative works from, publicly perform, publicly display, distribute, make or have made Tarrant County's Suggestions in any form and any medium (whether now known or later developed), without credit or compensation to Tarrant County. This clause does not apply to contributions subject to specific government IP ownership requirements.
17. **Effect of Prior Agreement**: This Agreement embodies all agreements and understandings of the Parties with respect to its subject matter and supersedes all prior agreements between Athreon and Tarrant County, whether oral or written, and all such prior agreements are canceled. Notwithstanding the foregoing, the order of precedence among documents shall be as set forth in Section 21 (Order of Precedence).
18. **Entire Agreement/Amendment**: This Agreement (i) is being entered into among competent and experienced business persons and the terms and provisions of this Agreement shall not be construed in favor of or against either Party (ii) constitutes the sole and complete agreement between the Parties with regard to its subject matter. The section headings used herein are for references and convenience only, and shall not enter into the interpretation hereof. This Agreement may be executed in multiple counterparts and delivered by facsimile transmission, each of which shall be deemed an original but all of which shall constitute one and the same instrument.
19. **Changes**: No part of this Agreement may be modified except by written agreement signed by both Parties.
20. **Business Associate Agreement**: If applicable, such as in the case of government health agencies or covered entities, the Parties shall negotiate in good faith mutually acceptable terms and conditions related to requirements imposed in connection with individually identifiable health information under Privacy Laws, and shall set forth such terms and conditions within a Business Associate Agreement (the "BAA").
21. **Order of Precedence**: In the event of any inconsistency or conflict of terms, Tarrant County RFP No. F2025179, *Annual Contract for Audio Transcription Services,* and Vendor's response to RFP No. F2025179 shall control, followed by these General Terms and Conditions, the Statement of Work, and the Order Form.
22. **Third Parties**: In the course of delivering its Services, Athreon may utilize third-party technology components or services. These third-party elements are integrated as part of Athreon's offering and do not require separate licensing or procurement by Tarrant County unless expressly stated in writing. If Tarrant County independently chooses to use or integrate additional third-party software or services outside the scope of Athreon's solution, such use shall be governed by Tarrant County's direct agreement with that third-party provider. Athreon shall not be liable for the functionality, accuracy, or availability of such independently sourced third-party products. Athreon remains responsible for the performance of its Services, including any third-party tools integrated into its platform to fulfill contract requirements.

23. **Third-Party Content**: Athreon's website, social media channels, apps, and/or Service may contain links to third-party websites, products, or services, which may be posted by advertisers, our affiliates, our partners, or other users ("Third-Party Content"). Third-Party Content is not under Athreon's control, and Athreon is not responsible for any third-party websites, products, or services. Tarrant County's use of Third-Party Content is at Tarrant County's own risk, and Tarrant County should make any investigation Tarrant County feels is necessary before proceeding with any transaction in connection with such Third-Party Content. For clarity, this clause applies only to Third-Party Content not integrated or explicitly endorsed by Athreon as part of the delivered Service.
24. **No Third-Party Beneficiaries**: Nothing in this Agreement is intended to create any rights in, or confer any benefits upon, any person or entity other than the Parties to this Agreement.
25. **Assignment**: In no event may Tarrant County assign its rights or obligations hereunder without Athreon's prior written consent except where required under applicable procurement rules or government contract assignment policies.
26. **Breach and Waiver**: No waiver of any breach of this Agreement shall: (a) be effective unless it is in a writing which is executed by the Party charged with the waiver, or (b) constitute a waiver of a subsequent breach, whether or not of the same nature. All waivers shall be strictly construed. No delay in enforcing any right or remedy as a result of a breach of this Agreement shall constitute a waiver thereof.

Exhibit D - Service Level Agreement (SLA) for Government Clients

Last Updated 06/18/2025

1. Purpose

This Service Level Agreement ("SLA") outlines Athreon's commitment to deliver high-quality transcription services to government clients, including expectations for system availability, customer support, issue resolution, and service performance.

2. Scope of Services

This SLA applies to transcription services provided under the Statement of Work (SOW) and Order Form executed between Athreon and the Client. It covers:

- Audio file upload and download via Athreon's secure web portal and/or mobile app
- Human transcription and quality assurance
- Final transcript delivery in approved formats
- Secure access for authorized users

3. Service Availability

Athreon will make its transcription portal and mobile app available 24/7/365, excluding scheduled maintenance windows.

- **Planned Maintenance:** Notice will be provided at least 48 hours in advance.
- **Emergency Maintenance:** Athreon will notify the Client as soon as reasonably possible.

4. System Uptime Commitment

Athreon guarantees 99.5% monthly uptime for its hosted platform, excluding:

Exhibit D - Service Level Agreement (SLA) for Government Clients

Last Updated 06/18/2025

- Scheduled maintenance
- Client-side connectivity issues
- Events of Force Majeure

5. Support Services

Athreon provides technical support to Client personnel as follows:

Support Hours	Availability	Response Time
Standard Support	M–F, 8:00am–5:00pm ET, excluding federal holidays	< 2 business hours
Emergency Support	24/7 for critical issues	< 1 hour

> Note: Emergency support is available at no additional charge for system outages or issues preventing access to critical services.

6. Issue Classification and Resolution Targets

Severity	Description	Target Resolution Time
1 - Critical	System-wide outage or access failure	< 4 hours

Exhibit D - Service Level Agreement (SLA) for Government Clients

Last Updated 06/18/2025

2 - Major	Service degradation impacting many users	< 1 business day
3 - Moderate	Issue with limited user impact	< 2 business days
4 - Minor	Cosmetic issues or enhancement requests	< 5 business days

7. Quality Assurance and Accuracy

Athreon provides 99%+ transcription accuracy for human-processed transcripts, based on clearly recorded audio. QA is conducted in accordance with agency guidelines and includes:

- Peer review and formatting validation
- Internal style guide adherence
- Escalation for files with high error rates or flagged content

8. Data Security and Confidentiality

Athreon will:

- Encrypt all files in transit (TLS 1.2+) and at rest (AES 256-bit)
- Host data in U.S.-based, SOC 2 Type II-audited facilities
- Require user MFA (upon request) and enforce role-based access
- Provide full audit logs of file activity upon request
- Restrict access to authorized U.S.-based personnel

Exhibit D - Service Level Agreement (SLA) for Government Clients

Last Updated 06/18/2025

> Note: No files are stored on local devices. All processing occurs in Athreon's secure cloud environment.

Business Continuity and Disaster Recovery
Athreon maintains documented business continuity and disaster recovery protocols to ensure continued service availability in the event of unforeseen disruptions. Detailed plans are available for review by the Client upon request.

9. Change Management

Athreon will not modify the terms of this SLA during the contract period without the Client's written consent. Any service-affecting changes will be communicated in advance.

10. Third-Party Services

Athreon will not pass through third-party support fees or platform costs without prior written approval from the Client.

11. Reporting

Upon request, Athreon will provide the following:

- Uptime reports
- SLA performance metrics
- Support ticket logs
- Audit trail summaries

12. Client Responsibilities

Exhibit D - Service Level Agreement (SLA) for Government Clients

Last Updated 06/18/2025

To support service quality, the Client agrees to:

- Report issues promptly via Athreon's ticketing system
- Maintain current contact information for authorized users
- Provide clear, intelligible audio and any required metadata

13. Review and Renewal

This SLA is valid for the duration of the contract term and may be reviewed annually or as requested by the Client.

EXHIBIT E - STATEMENT OF WORK
TRANSCRIPTION SERVICES



1. Introduction

This Statement of Work ("SOW"), dated as of the last signature below, constitutes a binding agreement between Tarrant County ("Client") and Athreon Corporation ("Athreon"). This SOW is an extension of the Order Form, previously accepted by the Parties, effective as of December 9, 2025 (the "Project Start Date"), and is subject to the General Terms and Conditions and the CJIS Security Addendum as applicable. The terms set forth herein detail the specific scope and responsibilities associated with the provision of Service by Athreon to the Client, further defining the engagement outlined in the aforementioned documents.

This SOW is effective upon the date of the last signature obtained (the "Effective Date") and is to be read in conjunction with the Order Form and any other referenced documents. In the event of any discrepancy or conflict between the documents, the order of precedence will be as follows: (i) Tarrant County RFP No. F2025179, *Annual Contract for Audio Transcription Services*, (ii) Vendor's proposal/response to RFP No. F2025179, (iii) the General Terms, including all exhibits and attachments (iv) the Statement of Work; and (v) the Order Form. Notwithstanding the foregoing, any mutually executed amendment or addendum entered into after the Effective Date shall specify any conflicts with Tarrant County RFP No. F2025179 and the Vendor's Response thereto and shall take precedence over the original solicitation documents only to the extent of such specified conflicts.



2. Responsibilities of Athreon and the Client

To ensure the effective delivery of Services and maintain the highest standards of cooperation and communication, the following responsibilities are assigned to Athreon and the Client:

- **Athreon's Responsibilities**:
  - **Service Delivery**: Athreon will provide the Service as specified in this SOW. This includes meeting the quality standards and Turnaround Times agreed upon.
  - **Data Security and Privacy**: Athreon is responsible for implementing and maintaining robust data security measures and ensuring compliance with all relevant data protection regulations to safeguard the Client's information.
  - **Training and Compliance**: Athreon will ensure that all staff involved in handling Client projects are appropriately trained and compliant with industry standards and best practices related to Data handling.
  - **Technical Support**: Athreon will provide necessary technical support to facilitate the delivery of Service and address any issues related to the use of its platforms or Service.
- **Client's Responsibilities**:

- **Provision of Information**: The Client will provide all necessary files, materials, and information required for the delivery of the Service. This includes clear specifications for transcription styles, formatting requirements, and any other pertinent details.
- **Access and Cooperation**: The Client will grant Athreon appropriate access to Client Systems and Data as required to provide the Service effectively. The Client agrees to cooperate fully with Athreon and provide timely responses to requests for information or decisions.
- **Review and Feedback**: The Client is responsible for reviewing the deliverables within the agreed timelines and providing feedback or approval. The Client must also communicate any changes in project scope or requirements promptly.
- **Payment**: The Client agrees to fulfill all payment obligations as outlined in the SOW, ensuring timely payment of invoices according to the terms set forth in the Order Form.

Both Parties agree to perform their responsibilities with professionalism and integrity, aiming to achieve the highest level of Service quality and Client satisfaction. This cooperative effort is crucial for the successful completion of the Service outlined in this SOW.



3. Data Security and Privacy

Athreon and the Client commit to upholding the highest standards of data security and privacy in compliance with applicable regulations such as CJIS. To this end, Athreon will undertake the following measures:

- **Regular Training**: Provide ongoing training for all staff on the latest privacy practices and data handling requirements to ensure full regulatory compliance and best practices in Data security.
- **Secure Access Protocols**: Implement stringent access controls requiring unique login credentials for all staff. This ensures individual accountability and helps safeguard sensitive information.
- **Data Minimization**: Adhere strictly to the principle of minimum necessary use, where Athreon's access to Client Data is limited strictly to what is necessary to perform the agreed-upon Service.
- **Audits and Compliance Reviews**: Conduct regular audits to verify compliance with data protection policies and the effectiveness of security measures. Address any vulnerabilities or compliance gaps promptly.
- **Data Encryption**: Use strong encryption protocols for storing and transmitting Client Data to protect against unauthorized access and data breaches.
- **Incident Response Plan**: Maintain a robust incident response plan that includes prompt notification of any Data breach or security incident to the Client, along with detailed steps for mitigation and corrective action.



4. Estimated Work Volume

- **Volume Commitment:** The Client commits to an estimated work volume of 16,800 Minutes of Media Files per year. This estimate is based on the typical needs and consumption patterns anticipated for the duration of this SOW.
- **Notification of Changes:** The Client agrees to inform Athreon promptly of any significant changes in work volume or patterns that could impact Service delivery. This includes both increases and decreases in the required volume of work.
- **Resource Adjustment:** Athreon will regularly review and, if necessary, adjust resources to efficiently handle any fluctuations in work volume. This ensures that the quality and timeliness of Service delivery are maintained regardless of volume changes.



5. Transcription Style

Athreon offers a variety of transcription styles tailored to meet diverse Client needs across multiple use cases:

- **Clean Verbatim**:
  - **Description**: Transcripts are concise and clear, omitting verbal fillers, interrupting phrases, false starts, slang, stutters, and unnecessary repetitions. They maintain the meaning of sentences without summarizing or paraphrasing and exclude non-verbal notations like coughing or laughing.
  - **Example**: "I was going to tell you about my trip to Nevada."
- **Verbatim**:
  - **Description**: These Transcripts capture every spoken word exactly as heard, including all ums, uhs, and stutters, and maintain the original grammar and structure of the speech.
  - **Example**: "Um, like, I- I was going to tell you about my, um, trip to, um, Nevada."



6. Quality Assurance

Athreon is committed to delivering the highest quality Transcripts. Here is our quality assurance process:

- **Transcription Team**: Your project will be handled by one or more of Athreon's highly-qualified transcriptionists, all of whom adhere to industry best practices throughout the transcription process.
- **Handling Quality Issues in Media and Document Files:**
    - **Challenges Addressed**: During production, if the quality of your Media Files is compromised, challenges may arise. For audio files, issues such as low volume, background noise, cross-talk, or inaudible speech can affect clarity.
    - **QA Flags**: In instances where audio is unclear or text is illegible, our production team will place a QA flag on those segments. This ensures that no assumptions are made about the unclear content, maintaining the integrity of the final deliverable. Our team commits to reaching out for clarification when necessary to ensure the highest quality of output.
- **Review and Escalation Process**:
    - **Initial Client Review**: Once production is complete, the Client is responsible for reviewing the QA flags and addressing any unclear content.
- **Escalation for Enhanced Review**: If a File contains more than 10 QA flags, it will be escalated for further review by an Athreon QA Specialist before delivery.
    - **QA Specialist Expertise**: Our QA Specialists are senior members of the team with advanced skills and extensive experience in editing and proofreading. Their review ensures the highest possible accuracy.

This structured approach ensures that all Files meet our high standards and that any issues related to audio or scan quality are systematically addressed to maintain the integrity and accuracy of the work product.



7. Turnaround Time & Delivery

Athreon is dedicated to adhering to specified Turnaround Times for all Services to ensure timely delivery as per the following standards:

- **Standard Turnaround Time**:
    - **Time Frames**: Media Files will be processed within 3-5 days.
- **Turnaround Time Exceptions**:
    - **Expedited Turnaround Time**: Expedited turnaround requests outside the Standard Turnaround Time (3-5 days) may be accommodated as capacity allows and will be billed at the rush rate listed in the Order Form.
    - **Volume Surges**: Turnaround Times may be extended due to Media File complexity, sudden surges in volume that deviate from the Client's usual pattern, or if Services are utilized in a manner not aligned with the SOW.
    - **Resource Adjustment**: Athreon will endeavor to allocate additional resources to manage significant fluctuations in volume as efficiently as possible.
- **Delivery Format and Method**:
    - **Delivery Channels**: Files will be delivered to the Client via Athreon's web portal.
    - **File Formats**: Deliverables are available in multiple formats. Files for this project will be delivered in PDF to meet the Client's requirements.



8. Flexible Service Options

While Athreon's solution is ready for immediate use, we recognize that operational needs may evolve. Our team can accommodate limited customization such as formatting preferences, user permissions, or speaker labeling configurations. Should special requests arise during the contract term, we're happy to discuss them to ensure our service continues to meet the County's needs efficiently and reliably.



9. Go-Live Planning

Athreon is committed to a seamless transition and launch of Service. Below are the key components of our go-live planning:

- **Staffing**:
  - **Timeline**: Athreon estimates it will take 5-10 business days to allocate and train staff adequately for this Statement of Work (SOW).
  - **Preparation**: Efforts will be made to ensure that all personnel are fully trained and prepared to meet the specific needs of the Client from the outset.
- **Service Launch**:
  - **Project Start Date**: The Services under this SOW are scheduled to be operational starting on or around November 11, 2025.
  - **Pre-Launch Review**: Prior to the launch, Athreon will conduct a final review to ensure that all systems and processes are in place and functioning as required.
- **Handling Delays**:
  - **Communication Protocol**: In the event of any delays from either Athreon or the Client, both Parties agree to engage in timely and transparent communication.
  - **Mitigation Strategies**: Appropriate measures will be discussed and implemented to minimize the impact of any delays on the overall project timeline.

This proactive approach in planning and communication is designed to ensure that all necessary resources are in place for a successful Service launch, fostering a cooperative relationship from the start.



10. Terms of Engagement & Termination

- This SOW is valid for the period specified in the Order Form named in Section 1 of this SOW.
- Any modifications to this SOW must be agreed upon in writing by both Parties in a new SOW.
- This SOW embodies all agreements and understanding of the Parties with respect to its subject matter and supersedes all prior SOWs between Athreon and Client and all such prior SOWs are canceled.



11. Acceptance

By signing below, both Parties agree to the terms and deliverables outlined in this SOW. The Parties have executed this SOW through their duly authorized representatives on the dates indicated below. Each of the individuals signing this SOW represents and warrants that the Party from whom he or she is acting has duly authorized the execution and performance of this SOW.

Client		**Athreon**	
Signature:		Signature:	A Garde
Name:		Name:	Sterling Garde
Title:		Title:	Chief Operating Officer
Date:		Date:	11/07/2025

ORDER FORM

This Order Form ("Order Form") is entered into by and between Athreon Corporation ("Athreon") and the government entity identified below ("Client" and “Tarrant County”). The effective date of this Order Form shall be the date signed by the last Party (the "Effective Date"). This Order Form incorporates by reference the General Terms and Conditions (the "General Terms") included as Exhibit C. All terms shall comply with applicable state and federal procurement rules. By signing below, each Party acknowledges and agrees that the General Terms shall be binding on such Party with regard to this Order Form unless expressly modified or stated otherwise herein. Any capitalized term not otherwise defined in this Order Form shall have the meaning ascribed to it in the General Terms. This Agreement may be executed in counterparts, each of which shall be deemed an original, and all of which together shall constitute one and the same instrument. Signatures transmitted electronically or by facsimile shall be deemed to have the same legal effect as original signatures.

CLIENT INFORMATION

Client Name:	Tarrant County
Contact Name & Title:	Kehinde Olugbile, Buyer
Billing Street Address:	100 E. Weatherford St., Room 303
City:	Fort Worth
State & Country:	Texas, USA
Zip:	76196
Phone:	(817) 884-1414
Email:	purchasing@tarrantcountytx.gov

STATEMENT OF WORK: The scope of Services to be provided by Athreon will be defined in one or more Statement of Work (“SOW”) documents, mutually agreed upon and executed by both Parties. Each SOW shall describe the applicable deliverables, timelines, responsibilities, and any other relevant terms. Any services not explicitly identified in a signed SOW are excluded from the scope of this Agreement. Modifications or expansions to an existing SOW must be documented in a written amendment or a new SOW executed by both Parties. Termination of an individual SOW does not affect the validity or continuation of the Master Agreement or any other SOWs in effect unless explicitly stated otherwise.

CLIENT SUPPORT: Tarrant County support will be provided in accordance with the Service Level Agreement (SLA) included as Exhibit D.

LABOR RESOURCES: Athreon will use U.S.-based labor in the delivery of the Service unless otherwise authorized in writing by Tarrant County.

DATA MANAGEMENT: Media Files and Source Files provided to Athreon by Tarrant County will be retained for a minimum of [90] days after receipt unless otherwise directed in writing by Tarrant County. Transcripts and/or Translations will be stored in Athreon Systems for a minimum of [365] days following completion, unless extended retention is requested. Tarrant County retains full ownership of all Media Files, Transcripts, and Translations, and may request export of such data at any time during the term of this Agreement and for 30 days following termination. Upon request, Athreon will provide Tarrant County with a copy of such data in a commercially reasonable format, without charge unless significant manual effort is required. Optional extended data archival or complex data export requests beyond standard access may be made available to Tarrant County at Athreon’s then-current rates, subject to Tarrant County’s written approval. It is Tarrant County’s responsibility to maintain local backup copies of any materials needed for long-term storage or compliance with applicable record retention policies.

TERM: This Order Form will commence on the Effective Date and, unless terminated earlier in accordance with the General Terms, will continue for an initial period of 12 months (“Initial Term”). The Agreement may be renewed for 2 additional 12-month periods upon mutual written agreement of the Parties, subject to applicable laws and funding availability. However, in no event shall the total term (Initial Term plus any renewal periods) exceed 36 months. Continuation of this Agreement beyond the current fiscal year is contingent upon appropriation of funds by Tarrant County’s governing body. Either Party may terminate the Agreement without penalty by providing at least 30 days’ prior written notice.

BILLING METRIC(S) AND ADDITIONAL BILLING TERMS: Billing for the Services will be calculated in accordance with the rates and metrics outlined in the table below. Athreon’s standard billing practices include the following:

- Time-based services: A fractional portion of an Hour will be rounded up to the next whole Hour.
- Audio-based services: A fractional portion of a Minute in a Media File will be rounded up to the next whole Minute.

Unless otherwise specified, charges are based on the total runtime of submitted media, regardless of content density, clarity, or speaker count. Only the service types selected and priced below are considered active and billable. Additional service types may be added through a mutually executed Statement of Work or amendment to this Order Form.

SERVICE TYPE	RATE PER BILLING METRIC
Annual Subscription – Human Audio Transcription	**$32,424 per year** (includes up to **16,800 audio minutes annually**, billed at **$2,702/month**, no refunds for unused minutes)
Overage – Human Audio Transcription	**$2.25 per additional audio minute** beyond 16,800 minutes annually
Optional Rush Delivery Service	$3.00 per audio minute for transcripts delivered in less than the standard 3-to-5-day turnaround time, subject to Athreon's availability and acceptance.

Subscription pricing includes access to Athreon's secure CJIS-compliant transcription platform, maintenance, and support. The annual subscription rate covers up to 16,800 minutes per contract year (1,400 minutes per month). Any usage exceeding this amount will be billed at the overage rate of $2.25 per minute. Subscription fees are invoiced monthly in arrears at $2,702 per month. Unused minutes do not roll over between contract years.

Rate Changes: A new Order Form or Statement of Work will be required to memorialize any rate changes not specified in this Order Form. The new Order Form or Statement of Work will be effective when executed by both Parties and will include the Effective Date of the agreed-upon rate changes.

Invoicing: Fees are billed monthly in arrears unless otherwise agreed in writing. Tarrant County will receive an itemized invoice detailing all services provided during the billing period. In the event of a billing dispute, the parties agree to work in good faith to resolve the matter. Refunds or credits will be issued if an error is confirmed.

Late Fee: Late fees may apply to past due, undisputed invoices, to the extent permitted by applicable law. In such instances, a late fee will be applied to undisputed, invoiced amounts not paid by Tarrant County after becoming due.

Initial Account Setup and Support: Athreon will provide up to five (5) Hours of no-cost support during the initial 30 days of service to complete Tarrant County onboarding, which may include user training, template configuration, and system setup. Any setup effort beyond this scope will only be performed with Tarrant County's prior written approval and may be billed at $50.00 per Hour.

Additional Services and Fees: Athreon will correct any transcription or translation inaccuracies at no cost to Tarrant County. However, additional services that fall outside routine scope (such as rework resulting from ambiguous or modified source material, or post-delivery Tarrant County style or vocabulary preferences not tied to accuracy) may be subject to a service fee of $50.00 per hour, with prior written approval from Tarrant County.

Payment Remittance: All payments are due in full within thirty (30) days of the invoice date, or as otherwise required by applicable local statute. Tarrant County may remit payment by check, ACH, or wire transfer as directed on the invoice.

CJIS Compliance (If Applicable): If the services provided under this Order Form involve access to Criminal Justice Information (CJI), the Parties agree to comply with the FBI Criminal Justice Information Services (CJIS) Security Policy. Upon request, Athreon will execute the CJIS Security Addendum provided by Tarrant County to document compliance with applicable CJIS requirements.

HIPAA Compliance (If Applicable): If the services provided under this Order Form involve the use or disclosure of Protected Health Information (PHI) subject to the Health Insurance Portability and Accountability Act (HIPAA), the Parties agree to execute a HIPAA Business Associate Agreement (BAA). Athreon will comply with the terms of the executed BAA and all applicable HIPAA regulations.

Exhibits and Incorporation by Reference: The following documents are incorporated by reference and made part of this Agreement with the same force and effect as if fully set forth herein. In the event of any conflict among these documents, the order of precedence shall be as specified in Section 21 of the General Terms.

- **Exhibit A:** Tarrant County RFP No. F2025179 – *Annual Contract for Audio Transcription Services*
- **Exhibit B:** Athreon Corporation Proposal/Response to RFP No. F2025179
- **Exhibit C:** Athreon General Terms and Conditions
- **Exhibit D:** Athreon Service Level Agreement (SLA)
- **Exhibit E:** Athreon Statement of Work (SOW)

Each Exhibit is attached hereto and incorporated herein by reference.

EFFECT OF PRIOR ORDER FORM: This Order Form, together with the incorporated exhibits listed above, embodies all agreements and understanding of the Parties with respect to its subject matter and supersedes all prior agreements between Athreon and Tarrant County, whether oral or written, and all such prior agreements are canceled.

IN WITNESS WHEREOF: The Parties have executed this Order Form through their duly authorized representatives on the dates indicated below. Each of the individuals signing this Order Form represents and warrants that the Party from whom he or she is acting has duly authorized the execution and performance of this Order Form.

Tarrant County	**Athreon**
Signature:_____	Signature: A Garde
Name:_____	Name: Sterling Garde
Title:_____	Title: Chief Operating Officer
Date:_____	Date: 11/07/2025

TAKINGS IMPACT ASSESSMENT CHECKLIST

Complete this form for any county action that involves the adoption of a regulation, policy, guideline, court resolution, or order.

Project/Regulation Name RFP No. F2025179 - Annual Contract for Audio Transcription Services - Sheriff's Office - Athreon Corporation - Per Contract Terms

County Department: PURCHASING

Contact Person: Melissa Lee, C.P.M., A.P.P.

Phone Number for Contact Person: (817) 884-3245

Type of TIA Performed: (SHORT TIA) or FULL TIA. Circle one after answering the questions in Sections II and III below.

****

I. Stated Purpose

Attach to this checklist an explanation of the purpose of the regulation, policy, guideline, court resolution or order.

****

Note: The remainder of this Takings Impact Assessment Checklist should be completed in consultation with the Criminal District Attorney's Office.

II. Potential Effect on Private Real Property

1. Does the county action require a physical invasion, occupation or dedication of real property?

   Yes _____ No √

2. Does the county action limit or restrict a real property right, even partially or temporarily?

   Yes _____ No √

If you answered yes to either question, go to Section III. If you answered no to both, STOP HERE and circle SHORT TIA at the top of the form.

****

TARRANT COUNTY
COMMISSIONERS COURT COMMUNICATION

Court Date: December 9, 2025	**Court Order #:**	**Page:** 1 of 6
Department: Purchasing	**Prepared By:** Erin N. Dawdy	**Approved By:** Christopher Lax, CPSM, CPSD, CPCP

SUBJECT:

Bid No. F2026010 - Annual Contract for Preventative Maintenance and Repair of Air Compressors - Facilities Management - TDIndustries, Inc. - Per Unit Price, Hourly Rates, and Markup for Parts

COMMISSIONERS COURT ACTION REQUESTED

It is requested that the Commissioners Court award Bid No. F2026010, Annual Contract for Preventative Maintenance and Repair of Air Compressors, for Facilities Management, to TDIndustries, Inc. at the per unit price, hourly rates, and markup for parts.

BACKGROUND

Notice of the County's intent to bid was advertised in a local newspaper, as required by State statute, and posted on the Internet, the Arlington Black Chamber of Commerce, the Fort Worth Hispanic Chamber of Commerce, the Fort Worth Metropolitan Black Chamber of Commerce, and the Tarrant County Asian American Chamber of Commerce. Five hundred fifty-six (556) vendors were contacted and requested to participate in this bid process. All documents pertaining to this bid were posted on the Tarrant County website and were downloaded by interested bidders. No vendors attended the pre-bid conference held on October 8, 2025. Two (2) bids and four (4) no-bids were received.

The low bid received from Prosper Services is not being considered for award following a pre-award meeting with the supplier to review Scope of Work. Facilities Management and Purchasing representatives determined that the vendor did not demonstrate the capability to meet the Scope of Work and therefore jointly recommend awarding the next lowest bidder.

The bid received from TDIndustries, Inc. meets all specifications and is acceptable to Facilities Management.

The term of the contract is twelve (12) months, effective January 1, 2026.

Subject to continued funding by the Commissioners Court, this agreement shall automatically renew January 1, 2027 and January 1, 2028, hereafter for two (2) twelve (12) month periods ending on December 31, 2028, unless sooner terminated by either party as provided herein.

The purpose of this contract is to provide for preventative maintenance, repairs, and replacement of air compressors throughout County buildings. These air compressors keep critical systems functioning, including dry fire sprinkler systems, pneumatic HVAC controls, pneumatic medical equipment, and pneumatic tools.

Therefore, it is the joint recommendation of Facilities Management and Purchasing that Bid No. F2026010, Annual Contract for Preventative Maintenance and Repair of Air Compressors, be awarded to TDIndustries, Inc. at the per unit price, hourly rates, and markup for parts.

FISCAL IMPACT

Expenses for the last twelve (12) months were $47,899.63. Funding is available in account 10000-2026 General Fund/Various Cost Centers/532011 Building Maintenance.

Attachments

F2026010 Backup.pdf

Bid No. F2026010 Annual Contract for Preventative Maintenance and Repair of Air Compressors

			Award **TDIndustries, Inc. (TD Industries) Dallas, TX HUB - No CO-OP - Yes**		Prosper Services Prosper, TX HUB - Yes	
Item	**Description**	**QTY**	**Unit Price**	**Ext Price**	Unit Price	Ext Price
1.1	Carpenter Shop 900 N. Commerce Fort Worth, Texas 76106	1	**$1,292.19**	**$1,292.19**	$195.00	$195.00
1.3	Lon Evans CC 600 W Weatherford St. Fort Worth, Texas 76102	1	**$1,196.89**	**$1,196.89**	$215.00	$215.00
1.4	Corrections Center 100 Lamar Fort Worth, Texas 76102	2	**$560.12**	**$1,120.24**	$185.00	$370.00
1.5	Corrections Center 100 Lamar Fort Worth, Texas 76102	2	**$909.74**	**$1,819.48**	$205.00	$410.00
1.6	Corrections Center 100 Lamar Fort Worth, Texas 76102	2	**$548.06**	**$1,096.12**	$175.00	$350.00
1.7	Criminal Court Building 300 W. Belknap Fort Worth, Texas 76102	2	**$825.13**	**$1,650.26**	$195.00	$390.00
1.8	Criminal Court Building 300 W. Belknap Fort Worth, Texas 76102	2	**$627.12**	**$1,254.24**	$310.00	$620.00
1.9	Criminal Justice Building 200 W. Belknap Fort Worth, Texas 76102	2	**$535.10**	**$1,070.20**	$195.00	$390.00
1.10	Criminal Justice Building 200 W. Belknap Fort Worth, Texas 76102	2	**$627.12**	**$1,254.24**	$195.00	$390.00
1.11	Family Law Center 200 East Weatherford Fort Worth, Texas 76102	1	**$1,120.63**	**$1,120.63**	$165.00	$165.00
1.12	Family Law Center 200 East Weatherford Fort Worth, Texas 76102	1	**$1,017.06**	**$1,017.06**	$165.00	$165.00
1.13	Family Law Center Garage 101 Calhoun Street Fort Worth, Texas 76102	1	**$1,017.34**	**$1,017.34**	$175.00	$175.00
1.14	Medical Examiner's Office 200 Feliks Gwozdz Place Fort Worth, Texas 76104	2	**$5,154.31**	**$10,308.62**	$295.00	$590.00
1.15	Precinct #1 800 E. Rendon/Crowley Rd. Burleson, Texas 76028	1	**$1,239.12**	**$1,239.12**	$175.00	$175.00
1.16	Precinct #1 800 E. Rendon/Crowley Rd. Burleson, Texas 76028	1	**$1,239.12**	**$1,239.12**	$185.00	$185.00
1.17	Reproduction/Recycling Center 600 S. SylvaniaFort Worth, Texas 76111	1	**$1,139.71**	**$1,139.71**	$195.00	$195.00
1.18	Tarrant County Plaza Building 200 Taylor Street Fort Worth, Texas 76102	1	**$1,139.71**	**$1,139.71**	$165.00	$165.00
1.19	Taylor Parking Garage 300 W. Belknap Fort Worth, Texas 76102	1	**$1,256.30**	**$1,256.30**	$310.00	$310.00
1.20	Tim Curry Justice Center 400 W. Belknap Fort Worth, Texas 76102	1	**$1,068.05**	**$1,068.05**	$175.00	$175.00

Bid No. F2026010 Annual Contract for Preventative Maintenance and Repair of Air Compressors

			Award **TDIndustries, Inc. (TD Industries) Dallas, TX HUB - No CO-OP - Yes**		Prosper Services Prosper, TX HUB - Yes	
Item	**Description**	**QTY**	**Unit Price**	**Ext Price**	Unit Price	Ext Price
1.21	Tom Vandergriff Civil Courts Building 100 N. Calhoun Fort Worth, Texas 76102	1	**$887.62**	**$887.62**	$165.00	$165.00
1.22	Resource Connection 5051 Resource Drive Fort Worth, Texas 76119	1	**$1,097.25**	**$1,097.25**	$185.00	$185.00
1.23	Plaza Garage 601 W. Weatherford Street Fort Worth, Texas 76102	1	**$1,139.71**	**$1,139.71**	$165.00	$165.00
1.24	Licensed Repair Person Hourly Rate 8:00 a.m. to 5:00 p.m	25	**$115.00**	**$2,875.00**	$125.00	$3,125.00
1.25	Helper Hourly Rate 8:00 a.m. to 5:00 p.m	1	**$95.00**	**$95.00**	$65.00	$65.00
1.26	Licensed Repair Person Hourly Rate 5:00 p.m. to 8:00 a.m	1	**$172.50**	**$172.50**	$175.00	$175.00
1.27	Helper Hourly Rate 5:00 p.m. to 8:00 a.m	1	**$142.50**	**$142.50**	$95.00	$95.00
1.28	Licensed Repair Person Hourly Rate Weekends and Holidays	1	**$172.50**	**$172.50**	$195.00	$195.00
1.29	Helper Hourly Rate Weekends and Holidays	1	**$142.50**	**$142.50**	$115.00	$115.00
1.30	Parts Mark-up Over Cost		**30.0%**		15.0%	
1.31	Resource Connection Building 5041 Resource DriveFort Worth, Texas 76133	2	**$548.09**	**$1,096.18**	$225.00	$450.00
1.32	Stripping Shop 2650 Premier St Fort Worth, Texas 76111	1	**$1,125.92**	**$1,125.92**	$225.00	$225.00
1.33	Central Garage 2650 Premier St Fort Worth, Texas 76111	1	**$1,317.22**	**$1,317.22**	$175.00	$175.00
1.34	Public Health 4282 N Freeway Fort Worth, Texas 76137	4	**$1,587.63**	**$6,350.52**	$175.00	$700.00
Total			**$48,913.94**		* $11,456.00	

Note: Four (4) no-bid responses were received from Richmond Equipment, Plywood Company of Fort Worth, Complete Supply, and Automated Hydraulics.

* Facilities Management and Purchasing representatives determined that the vendor did not demonstrate the capability to meet the Scope of Work and therefore jointly recommend awarding the next lowest bidder.

TARRANT COUNTY

DEPARTMENT OF FACILITIES MANAGEMENT

October 24, 2025

Erin Dawdy
Senior Buyer
Tarrant County Purchasing

Subject: Bid No. F2026010 Annual Contract for Preventative Maintenance for Air Compressors

Ms. Dawdy,

Tarrant County Facilities Management (TCFM) has completed its evaluation of the bids and supporting documentation submitted for Bid No. F2026010, Annual Contract for Preventative Maintenance for Air Compressors. As part of the review process, the team conducted a thorough assessment of each bidder's qualifications and their capacity to meet the requirements outlined in the scope of work. This evaluation included a detailed review of solicitation compliance, pricing, and references.

Although both Prosper Services and TDIndustries meet the minimum specifications, the scope review of Prosper Services concluded that they do not demonstrate the capability to fulfill the contract requirements at the level expected of a primary vendor. The evaluation raised concerns regarding inconsistencies in their explanation of relevant experience and limited local staffing availability.

Based on these findings, TCFM recommends awarding the contract to TDIndustries as the primary vendor'

. Thank you for your attention to this matter.

Sincerely,

Joshua B. Palmer

Joshua B. Palmer
Operations Manager
Tarrant County Facilities Management

TAKINGS IMPACT ASSESSMENT CHECKLIST

Complete this form for any county action that involves the adoption of a regulation, policy, guideline, court resolution, or order.

Bid No. F2026010 - Annual Contract for Preventative Maintenance and Repair of Air Compressors - Facilities Management - TDIndustries, Inc. - Per Unit Price, Hourly Rates, and Markup for Parts

County Department: PURCHASING

Contact Person: Melissa Lee, C.P.M., A.P.P.

Phone Number for Contact Person: (817) 884-3245

Type of TIA Performed: (SHORT TIA) or FULL TIA. Circle one after answering the questions in Sections II and III below.

****

I. Stated Purpose

Attach to this checklist an explanation of the purpose of the regulation, policy, guideline, court resolution or order.

****

Note: The remainder of this Takings Impact Assessment Checklist should be completed in consultation with the Criminal District Attorney's Office.

II. Potential Effect on Private Real Property

1. Does the county action require a physical invasion, occupation or dedication of real property?

   Yes_____ No __√__

2. Does the county action limit or restrict a real property right, even partially or temporarily?

   Yes_____ No __√__

If you answered yes to either question, go to Section III. If you answered no to both, STOP HERE and circle SHORT TIA at the top of the form.

****

TARRANT COUNTY
COMMISSIONERS COURT COMMUNICATION

Court Date: December 16, 2025	**Court Order #:**	**Page:** 1 of 6
Department: Purchasing	**Prepared By:** Gwen Peterson, C.P.M., A.P.P.	**Approved By:** Christopher Lax, CPSM, CPSD, CPCP

SUBJECT:

Bid No. F2026012 - Annual Contract for Grease, Lint, Oil, and Sand Trap Cleaning Services - Facilities Management - EnviroServe, Inc. - Per Unit Price and Hourly Rates

COMMISSIONERS COURT ACTION REQUESTED

It is requested that the Commissioners Court award Bid No. F2026012, Annual Contract for Grease, Lint, Oil, and Sand Trap Cleaning Services, for Facilities Management, to EnviroServe, Inc. at the per unit price and hourly rates.

BACKGROUND

Notice of the County's intent to bid was advertised in local newspapers, as required by State statute, and posted on the Internet, the Arlington Black Chamber of Commerce, the Fort Worth Hispanic Chamber of Commerce, the Fort Worth Metropolitan Black Chamber of Commerce, and the Tarrant County Asian American Chamber of Commerce. One thousand, forty-four (1,044) vendors were contacted and requested to participate in this bid process. All documents pertaining to this bid were posted on the Tarrant County website and were downloaded by interested bidders. A pre-bid conference held on October 15, 2025 was attended by one (1) vendor as well as representatives from Facilities Management and Purchasing. Two (2) bids and nine (9) no-bids were received.

Bids were evaluated by Facilities Management and Purchasing representatives. Earthtek Inc. was deemed non-responsive for failure to bid on every line item as required in the specifications. The bid received from EnviroServe, Inc. meets all specifications and is acceptable to Facilities Management.

The term of the contract is twelve (12) months, effective January 7, 2026.

Subject to continued funding by the Commissioners Court, this agreement shall automatically renew January 7, 2027, and January 7, 2028, hereafter for two (2) twelve (12) month periods ending on January 6, 2029, unless sooner terminated by either party as provided herein.

The purpose of this contract is to provide services to clean out grease, lint, oil, and sand traps at various County facilities, to prevent harmful substances from entering sewer systems.

Therefore, it is the joint recommendation of Facilities Management and Purchasing that Bid No. F2026012, Annual Contract for Grease, Lint, Oil, and Sand Trap Cleaning Services, be awarded to EnviroServe, Inc. at the per unit price and hourly rates.

FISCAL IMPACT

Expenses for the last twelve (12) months were $48,184.53. Funding is available in account 10000-2026 General Fund/Various Cost Centers/532011 Building Maintenance.

Attachments

Backup.pdf

Bid No. F2026012 Annual Contract for Grease, Lint, Oil, and Sand Trap Cleaning Services

				Award	
				EnviroServe, Inc. Fort Worth, TX HUB - No CO-OP - Yes	
				Total Price	$87,064.50
Line #	Description	QTY	UOM	Unit	Extended
2	Scheduled Standard Trap Clean-Out Service Visit				$49,293.00
2.1	Central Garage 2650 Premier Street Fort Worth, TX 76111 800 Gallon Sand Trap	1	Per Visit	$908.00	$908.00
2.2	Cold Springs Jail 1815 Cold Springs Road Fort Worth, TX 76196 1,000 Gallon Grease Trap	2	Per Visit	$645.00	$1,290.00
2.3	Cold Springs Jail 1815 Cold Springs Road Fort Worth, TX 76196 250 Gallon Sand Trap	1	Per Visit	$150.00	$150.00
2.4	Green Bay Jail 2500 Urban Drive Fort Worth, TX 76101 30,000 Gallon Grease Trap	4	Per Visit	$6,250.00	$25,000.00
2.5	Lon Evans Corrections Center 600 W. Weatherford Street Fort Worth, TX 76196 15,000 Gallon Sand Trap	2	Per Visit	$3,960.00	$7,920.00
2.6	Medical Examiner's Office 200 Feliks Gwozdz Place Fort Worth, TX 76104 1,000 Gallon Grease Trap	2	Per Visit	$940.00	$1,880.00
2.7	Gary Fickes Northeast Courthouse 645 Grapevine Highway Hurst, TX 76054 1,000 Gallon Oil/Sand Separator	1	Per Visit	$940.00	$940.00
2.8	J.D. Johnson Northwest Subcourthouse 6713 Telephone Road Lake Worth, TX 76135 500 Gallon Water/Sand Trap	1	Per Visit	$840.00	$840.00
2.9	Precinct 1 Maintenance Facility 800 E. Rendon Crowley Road Burleson, TX 76028 300 Gallon Water/Sand Trap	1	Per Visit	$825.00	$825.00
2.10	Precinct 2 Maintenance Facility 1203 E. Kennedale Parkway Kennedale, TX 76060 1,000 Gallon Sand Trap	2	Per Visit	$940.00	$1,880.00

Bid No. F2026012 Annual Contract for Grease, Lint, Oil, and Sand Trap Cleaning Services

				Award	
				EnviroServe, Inc. Fort Worth, TX HUB - No CO-OP - Yes	
				Total Price	$87,064.50
Line #	Description	QTY	UOM	Unit	Extended
2.11	Precinct 3 Maintenance Facility 7301 Precinct Line Road Fort Worth, TX 76182 1,000 Gallon Sand Trap	1	Per Visit	$940.00	$940.00
2.12	Precinct 4 Maintenance Facility 601 Longhorn Road Saginaw, TX 76179 500 Gallon Sand Trap	2	Per Visit	$860.00	$1,720.00
2.13	Precinct 4 Maintenance Facility 601 Longhorn Road Saginaw, TX 76179 1,000 Gallon Sand Trap	1	Per Visit	$860.00	$860.00
2.14	Premier Annex/Fire Marshal 2750 Premier Street Fort Worth, TX 76111 800 Gallon Sand Trap	1	Per Visit	$900.00	$900.00
2.15	Resource Connection, Building 5041 5041 Resource Drive Fort Worth, TX 76133 1,795 Gallon Lint Trap	1	Per Visit	$1,070.00	$1,070.00
2.16	Scott D. Moore Juvenile Justice Center 2701 Kimbo Road Fort Worth, TX 76111 2,800 Gallon Grease Trap	1	Per Visit	$1,230.00	$1,230.00
2.17	Mental Health Jail Diversion Center 812 West Morphy Street Fort Worth, TX 76104 1,000 Gallon Grease Trap	1	Per Visit	$940.00	$940.00
3	Additional Non-Standard Services				
3.1	Roll-Off Truck with Operator Monday – Friday 8:00 AM – 5:00 PM Fuel Surcharge at fuel index rate will apply	38	Per Hour	$160.00	$6,080.00
3.2	Roll-Off Truck with Operator Monday – Friday 5:01 PM – 7:59 AM Fuel Surcharge at fuel index rate will apply	4	Per Hour	$200.00	$800.00
3.3	Roll-Off Truck with Operator Weekends and Contractor Recognized Holidays Fuel Surcharge at fuel index rate will apply	1	Per Hour	$250.00	$250.00
3.4	Standard Ton or 1 Ton pick-up / Dually Truck Fuel Surcharge at fuel index rate will apply	1	Per Day	$350.00	$350.00

Bid No. F2026012 Annual Contract for Grease, Lint, Oil, and Sand Trap Cleaning Services

				Award	
				EnviroServe, Inc. Fort Worth, TX HUB - No CO-OP - Yes	
				Total Price	$87,064.50
Line #	Description	QTY	UOM	Unit	Extended
3.5	Supervisor Monday – Friday 8:00 AM – 5:00 PM	15	Per Hour	$95.00	$1,425.00
3.6	Supervisor Monday – Friday 5:01 PM – 7:59 AM	1	Per Hour	$142.50	$142.50
3.7	Supervisor Weekends and Contractor Recognized Holidays	1	Per Hour	$190.00	$190.00
3.8	Technician – HazMat Trained – Confined Space Certified Monday – Friday 8:00 AM – 5:00 PM	16	Per Hour	$79.00	$1,264.00
3.9	Technician – HazMat Trained – Confined Space Certified Monday – Friday 5:01 PM –7:59 AM	1	Per Hour	$118.50	$118.50
3.10	Technician – HazMat Trained – Confined Space Certified Weekends and Contractor Recognized Holidays	1	Per Hour	$158.00	$158.00
3.11	CDL Truck Driver Monday – Friday 8:00 AM – 5:00 PM	1	Per Hour	$85.00	$85.00
3.12	CDL Truck Driver Monday – Friday 5:01 PM – 7:59 AM	1	Per Hour	$127.50	$127.50
3.13	CDL Truck Driver Weekends and Contractor Recognized Holidays	1	Per Hour	$170.00	$170.00
3.14	6" x 100' Ads Hose	2	Per Day	$450.00	$900.00
3.15	Level D PPE Package (Hard Hat, Safety Glasses, & Vest)	6	EA	$41.00	$246.00
3.16	Box Vacuum (20-25 Cubic Yards)	5	EA	$75.00	$375.00
3.17	Air Mover / Guzzler / Super Sucker with Operator Fuel Surcharge at fuel index rate will apply	22	Per Hour	$350.00	$7,700.00
3.18	4,000 PSI Hot Water Pressure Washer (Includes 100ft.)	1	Per Day	$315.00	$315.00
3.19	Disposal Fee	16500	Per Gallon	$0.85	$14,025.00
3.20	City of Fort Worth Permit Fee	2	EA	$250.00	$500.00
3.21	Non-Hazardous Waste Transport Fee Fuel Surcharge at fuel index rate will apply	3	EA	$850.00	$2,550.00

Notes:

Earthtek, Inc. was deemed non-responsive for failure to submit pricing for every line item, as required.

A no-bid was received from Automated Hydraulics, Communication Concepts, Complete Supply, Inc., J. Reynolds & Co., Plywood Company of Fort Worth, Richmond Equipment, Shirt Fanatics LLC, TDIndustries, Inc., and Texas Pipeline Services.

TARRANT COUNTY

DEPARTMENT OF FACILITIES MANAGEMENT

November 4, 2025

Gwen Peterson
Senior Buyer
Tarrant County Purchasing Department
100 East Weatherford, Suite 303
Fort Worth, TX 76196

Subject: Bid F2026012 Annual Contract for Grease, Lint, Oil, and Sand Trap Cleaning Service. EnviroServe.

Re: Approval of Low Bidder

Ms. Peterson,

Tarrant County Facilities Management (TCFM) has reviewed the bid and supporting documents submitted for Bid F2026012 Annual Contract for Grease, Lint, Oil, and Sand Trap Cleaning Service.

Tarrant County Facilities Management (TCFM) has completed its evaluation of the bids and supporting documentation submitted for Bid No. F2026012, Annual Contract for Grease, Lint, Oil, and Sand Trap Cleaning Service. After a comprehensive review, TCFM has determined that EnviroServe possesses the qualifications and capacity to successfully fulfill the scope of work outlined in the solicitation.

Based on this evaluation, TCFM recommends awarding the contract to **EnviroServe as the primary vendor**.

Tarrant County Facilities Management

Sincerely,

Joshua B. Palmer
Tarrant County Facilities Management
200 North Taylor St., Suite 344
Fort Worth, TX 76196

TAKINGS IMPACT ASSESSMENT CHECKLIST

Complete this form for any county action that involves the adoption of a regulation, policy, guideline, court resolution, or order.

Project/Regulation Name: Bid No. F2026012 - Annual Contract for Grease, Lint, Oil and Sand Trap Cleaning Services - Facilities Management - EnviroServe, Inc. - Per Unit Price and Hourly Rates

County Department: PURCHASING

Contact Person: Melissa Lee, C.P.M., A.P.P.

Phone Number for Contact Person: (817) 884-3245

Type of TIA Performed: (SHORT TIA) or FULL TIA. Circle one after answering the questions in Sections II and III below.

****

I. Stated Purpose

Attach to this checklist an explanation of the purpose of the regulation, policy, guideline, court resolution or order.

****

Note: The remainder of this Takings Impact Assessment Checklist should be completed in consultation with the Criminal District Attorney's Office.

II. Potential Effect on Private Real Property

1. Does the county action require a physical invasion, occupation or dedication of real property?

   Yes _____ No √

2. Does the county action limit or restrict a real property right, even partially or temporarily?

   Yes _____ No √

If you answered yes to either question, go to Section III. If you answered no to both, STOP HERE and circle SHORT TIA at the top of the form.

****

TARRANT COUNTY
COMMISSIONERS COURT COMMUNICATION

Court Date: December 9, 2025	**Court Order #:**	**Page:** 1 of 5
Department: Purchasing	**Prepared By:** Wanyu Chen	**Approved By:** Christopher Lax, CPSM, CPSD, CPCP

SUBJECT:

Bid No. F2026013 - Annual Contract for Quickbase Enterprise Platform Subscription - Public Health - Quickbase, Inc.

COMMISSIONERS COURT ACTION REQUESTED

It is requested that the Commissioners Court award Bid No. F2026013, Annual Contract for Quickbase Enterprise Platform Subscription, for Public Health, to Quickbase, Inc. for $349,740.00.

BACKGROUND

Notice of the County's intent to bid was advertised in a local newspaper, as required by State statute, and posted on the Internet, the Arlington Black Chamber of Commerce, the Fort Worth Hispanic Chamber of Commerce, the Fort Worth Metropolitan Black Chamber of Commerce, and the Tarrant County Asian American Chamber of Commerce. Nine hundred fifty-seven (957) vendors were contacted and requested to participate in this bid process. All documents pertaining to this bid were posted on the Tarrant County website and were downloaded by interested bidders. Five (5) bids and eight (8) no-bids were received.

vPrime Tech, Inc. withdrew their bid. The bid received from Quickbase, Inc. meets all specifications and is acceptable to Public Health.

The term of the contract is twelve (12) months, effective January 1, 2026.

Subject to continued funding by the Commissioners Court, this agreement shall automatically renew January 1, 2027 and January 1, 2028, hereafter for two (2) twelve (12) month periods ending on December 31, 2028, unless sooner terminated by either party as provided herein.

This purchase is for the continuation of existing Quickbase subscription. Public Health uses Quickbase to make a variety of manual data collection and storage processes electronic for Public Health staff and the public. Some key use cases include tracking of Public Health workforce; grant timesheets; equipment inventory; septic and sewage inspections; appointments for mobile food vendors, and many more. Unlike traditional spreadsheet solutions, the system has role-based security for increased data safety, security and integrity. It also permits multiple users to use the system simultaneously all while generating the necessary audit trail required for public health documentation.

Therefore, it is the joint recommendation of Public Health and Purchasing that Bid No. F2026013, Annual Contract for Quickbase Enterprise Platform Subscription, be awarded to Quickbase, Inc. for $349,740.00.

FISCAL IMPACT

Expenses for the last twelve (12) months were $461,500.00. Funding for Year 1 in the amount of $349,740.00 is available in account T0400-2026 Public Health Fund/5100011000 Public Health/578025 Software Maintenance and Licenses. Annual subscription fees for Years 2 and 3 will be requested in future budgets.

Attachments

Backup.pdf

Bid No. F2026013 Annual Contract for Quickbase Enterprise Platform Subscription

				Award							
				Quickbase, Inc. Boston, MA HUB - No COOP - Yes		Software Information Resource Corp. Washington, DC HUB - Yes		vCloud Tech, Inc. Rolling Hills Estates, CA HUB - Yes		Advanced Proactive Solutions, LLC Frisco, TX HUB - Yes	
				Total Price	$1,049,992.79	Total Price	$1,056,082.74	Total Price	$1,109,825.16	Total Price	$1,329,983.00
Line #	Description	QTY	UOM	Unit	Extended	Unit	Extended	Unit	Extended	Unit	Extended
1.1	Subscription Plan for Quickbase Enterprise Platform Subscription, which includes: Term: 01/01/2026-12/31/2026 Term: 01/01/2027-12/31/2027 Term: 01/01/2028-12/31/2028 - Unlimited Users- Unlimited Applications - 1,000,000 Reads (Annual Enterprise-Usage) - 60 GB Application Space- 300 GB Attachment Space - Enterprise Pipeline Channels- Audit Logs - 3 Years - Advanced Encryption- ALM Sandbox - FastField - Users (Annual) - 12 Users - Ultimate Enablement Service Package - Provide detailed description under the Response Attachments tab. - Form Engine Add-On - 10,000 Transactions	3	Per Subscription	**$349,740.00**	**$1,049,220.00**	$351,768.49	$1,055,305.47	$369,672.72	$1,109,018.15	$443,000.00	$1,329,000.00
2.1	Subscription Reads (Annual Enterprise-Usage)	1	Per Read	**$0.2850**	**$0.2850**	$0.2867	$0.2867	$28.7100	$28.7100	$35.0000	$35.0000
2.2	FastField - Users (Annual)	1	Per User	**$22.5000**	**$22.5000**	$22.6305	$22.6305	$22.6700	$22.6700	$28.0000	$28.0000
2.3	Form Engine Add-On - Transactions (Annual)	1	Per Transaction	**$750.00**	**$750.00**	$754.35	$754.35	$755.63	$755.63	$920.00	$920.00

Notes: vPrime Tech, Inc. withdrew their bid.

No Bids received from 3-C TECHNOLOGY, LLC, GOOGOZ.COM, INC., Hypertec USA, Inc., Jamie Crandall Equipment Corp. dba Richmond Equipment, SecurityScorecard, Inc., Tall City Cyber, LLC, TDIndustries, Inc., and Trotter Controls Inc dba Automated Hydraulics.

Public Health

W. BRIAN BYRD, M.D., Local Health Authority & Health Director | CATHERINE A. COLQUITT, M.D., Medical Director

November 14, 2025

V. Wanyu Chen
Tarrant County Purchasing Department

Re: Bid No. F2026013 Annual Contract for Quickbase Enterprise Platform Subscription

Wanyu,

This letter is to confirm Tarrant County Public Health would like to award Bid No. F2026013 Annual Contract for Quickbase Enterprise Platform Subscription, to Quickbase, Inc.

Sincerely,

Gary Collins

Gary Collins, BAAS
Contract Specialist
Tarrant County Public Health
1101 South Main Street
Fort Worth, Texas 76104
Office Phone: 817-321-4873
phcontracts@tarrantcountytx.gov

TAKINGS IMPACT ASSESSMENT CHECKLIST

Complete this form for any county action that involves the adoption of a regulation, policy, guideline, court resolution, or order.

Project/Regulation Name: Bid No. F2026013 - Annual Contract for Quickbase Enterprise Platform Subscription - Public Health - Quickbase, Inc.

County Department: PURCHASING

Contact Person: Melissa Lee, C.P.M., A.P.P.

Phone Number for Contact Person: (817) 884-3245

Type of TIA Performed: (SHORT TIA) or FULL TIA. Circle one after answering the questions in Sections II and III below.

****

I. Stated Purpose

Attach to this checklist an explanation of the purpose of the regulation, policy, guideline, court resolution or order.

****

Note: The remainder of this Takings Impact Assessment Checklist should be completed in consultation with the Criminal District Attorney's Office.

II. Potential Effect on Private Real Property

1. Does the county action require a physical invasion, occupation or dedication of real property?

   Yes_____ No __√__

2. Does the county action limit or restrict a real property right, even partially or temporarily?

   Yes_____ No __√__

If you answered yes to either question, go to Section III. If you answered no to both, STOP HERE and circle SHORT TIA at the top of the form.

****

TARRANT COUNTY
COMMISSIONERS COURT COMMUNICATION

Court Date: December 9, 2025	**Court Order #:**	**Page:** 1 of 13
Department: Purchasing	**Prepared By:** Jill E. Stine	**Approved By:** Christopher Lax, CPSM, CPSD, CPCP

SUBJECT:

Bid No. F2026015 - Annual Contract for Window Washing Services - Facilities Management - Various Vendors - Per Unit Price

COMMISSIONERS COURT ACTION REQUESTED

It is requested that the Commissioners Court award Bid No. F2026015, Annual Contract for Window Washing Services, for Facilities Management, to the following vendors at the per unit price:

Primary	Jack & Joe's Window Cleaning, Inc. d/b/a Squeegee Squad
Secondary	Collin Glass Works, LLC d/b/a Collins Window Cleaning

BACKGROUND

Notice of the County's intent to bid was advertised in local newspapers, as required by State statute, and posted on the Internet, the Arlington Black Chamber of Commerce, the Fort Worth Hispanic Chamber of Commerce, the Fort Worth Metropolitan Black Chamber of Commerce, and the Tarrant County Asian American Chamber of Commerce. Six hundred eighty (680) vendors were contacted and requested to participate in this bid process. All documents pertaining to this bid were posted on the Tarrant County website and were downloaded by interested bidders. A pre-bid conference held on October 22, 2025 was attended by ten (10) vendors as well as representatives from Facilities Management and Purchasing. Four (4) bids and five (5) no-bids were received.

Bids were evaluated by Facilities Management and Purchasing representatives. Award recommendations are to low bids meeting specifications.

The term of the contract is twelve (12) months, effective January 5, 2026, with two (2) options for renewal periods of twelve (12) months each.

Subject to continued funding by the Commissioners Court, this agreement shall automatically renew January 5, 2027 and January 5, 2028, hereafter for two (2) twelve (12) month periods ending on January 4, 2029, unless sooner terminated by either party as provided herein.

The purpose of this contract is to provide services to wash interior and exterior windows, atriums, skylights, high glass in lobbies, including vertical power washing when elevated as well as the annual inspection and load testing of the Davit systems.

Therefore, it is the joint recommendation of Facilities Management and Purchasing that Bid No. F2026015, Annual Contract for Window Washing Services, be awarded to the vendors listed above at the per unit price.

FISCAL IMPACT

Expenses for last twelve (12) months were $130,480.00. Funding is available in account 10000-2026 General Fund/Various Cost Centers/532011 Building Maintenance.

Attachments

backup.pdf

F2026015 Annual Contract for Window Washing Services

			Primary Award		*Secondary Award*					
			Jack & Joe's Cleaning, Inc. dba Squeegee Squad Columbus, MN HUB- No CO-Op - Yes		*Collin Glass Works, LLC dba Collin Window Cleaning Fort Worth, TX HUB - No CO-OP - Yes*		Rolling Suds Ft. Worth Metro (TNRA Corporation) Willow Park, TX *HUB- No*		D&A Building Services *Fort Worth, TX HUB- Yes*	
			Total Price	$187,835.00	Total Price	$191,575.00	Total Price	$231,030.00	Total Price	*$ 239,799.00*
	Description	**QTY**	**Unit Price**	**Extension**	*Unit Price*	*Extension*	Unit Price	Extension	Unit Price	Extension
1	**1895 Courthouse (Weekend Cleaning Only)**									
	Exterior	3	**$2,200.00**	**$6,600.00**	*$2,590.00*	*$7,770.00*	$4,000.00	$12,000.00	$2,500.00	$7,500.00
	Interior	1	**$1,200.00**	**$1,200.00**	*$1,260.00*	*$1,260.00*	$1,500.00	$1,500.00	$1,100.00	$1,100.00
2	**350 W. Belknap Building**									
	Exterior	3	**$3,000.00**	**$9,000.00**	*$3,200.00*	*$9,600.00*	$4,000.00	$12,000.00	$3,000.00	$9,000.00
	Interior	1	**$1,700.00**	**$1,700.00**	*$1,800.00*	*$1,800.00*	$2,000.00	$2,000.00	$1,600.00	$1,600.00
3	**Administration Building (Weekend Cleaning Only)**									
	Exterior	3	**$2,100.00**	**$6,300.00**	*$2,550.00*	*$7,650.00*	$4,000.00	$12,000.00	$2,400.00	$7,200.00
	Interior	1	**$1,500.00**	**$1,500.00**	*$1,680.00*	*$1,680.00*	$1,750.00	$1,750.00	$1,580.00	$1,580.00
4	**Calhoun Garage (FLG)**									
	Exterior	3	**$110.00**	**$330.00**	*$125.00*	*$375.00*	$225.00	$675.00	$123.00	$369.00
	Interior	1	**$90.00**	**$90.00**	*$100.00*	*$100.00*	$125.00	$125.00	$90.00	$90.00
5	**Corrections Center (TCCC)**									
	Exterior	3	**$90.00**	**$270.00**	*$85.00*	*$255.00*	$125.00	$375.00	$90.00	$270.00
	Interior	1	**$110.00**	**$110.00**	*$115.00*	*$115.00*	$125.00	$125.00	$115.00	$115.00
	Davit/Tieback Annual Inspection	1	**$500.00**	**$500.00**	*$500.00*	*$500.00*	$750.00	$750.00	$1,760.00	$1,760.00
	5-Year Davit Load Test	1	**$3,500.00**	**$3,500.00**	*$3,070.00*	*$3,070.00*	$3,000.00	$3,000.00	$6,500.00	$6,500.00
6	**Criminal Courts Building (CCB)**									
	Exterior	3	**$500.00**	**$1,500.00**	*$500.00*	*$1,500.00*	$600.00	$1,800.00	$490.00	$1,470.00
	Interior	1	**$250.00**	**$250.00**	*$250.00*	*$250.00*	$350.00	$350.00	$225.00	$225.00
7	**Criminal Justice Building (CJB)**									
	Exterior	3	**$700.00**	**$2,100.00**	*$700.00*	*$2,100.00*	$800.00	$2,400.00	$900.00	$2,700.00
	Interior	1	**$500.00**	**$500.00**	*$500.00*	*$500.00*	$600.00	$600.00	$500.00	$500.00

F2026015 Annual Contract for Window Washing Services

			Primary Award		*Secondary Award*					
			Jack & Joe's Cleaning, Inc. dba Squeegee Squad Columbus, MN HUB- No CO-Op - Yes		*Collin Glass Works, LLC dba Collin Window Cleaning Fort Worth, TX HUB - No CO-OP - Yes*		Rolling Suds Ft. Worth Metro (TNRA Corporation) Willow Park, TX *HUB- No*		D&A Building Services *Fort Worth, TX HUB- Yes*	
			Total Price	$187,835.00	Total Price	$191,575.00	Total Price	$231,030.00	Total Price	*$ 239,799.00*
	Description	**QTY**	**Unit Price**	**Extension**	*Unit Price*	*Extension*	Unit Price	Extension	Unit Price	Extension
8	**Family Law Center (FLC)**									
	Exterior	3	**$2,200.00**	**$6,600.00**	*$2,300.00*	*$6,900.00*	$2,800.00	$8,400.00	$2,100.00	$6,300.00
	Interior	1	**$1,100.00**	**$1,100.00**	*$1,215.00*	*$1,215.00*	$1,100.00	$1,100.00	$1,200.00	$1,200.00
	Skylights Exterior	3	**$80.00**	**$240.00**	*$30.00*	*$90.00*	$125.00	$375.00	$30.00	$90.00
	Skylights Interior	1	**$400.00**	**$400.00**	*$495.00*	*$495.00*	$600.00	$600.00	$600.00	$600.00
	Davit/Tieback Annual Inspection	1	**$500.00**	**$500.00**	*$500.00*	*$500.00*	$750.00	$750.00	$1,660.00	$1,660.00
	5-Year Davit Load Test	1	**$5,900.00**	**$5,900.00**	*$5,750.00*	*$5,750.00*	$6,000.00	$6,000.00	$7,600.00	$7,600.00
9	**Lon Evans Corrections Center (LECC)**									
	Exterior	3	**$1,450.00**	**$4,350.00**	*$1,490.00*	*$4,470.00*	$1,700.00	$5,100.00	$1,400.00	$4,200.00
	Interior	1	**$450.00**	**$450.00**	*$400.00*	*$400.00*	$500.00	$500.00	$350.00	$350.00
	Davit/Tieback Annual Inspection	1	**$500.00**	**$500.00**	*$500.00*	*$500.00*	$750.00	$750.00	$1,660.00	$1,660.00
	5-Year Davit Load Test	1	**$5,000.00**	**$5,000.00**	*$4,820.00*	*$4,820.00*	$5,000.00	$5,000.00	$7,600.00	$7,600.00
10	**Plaza Building (PB)**									
	Exterior	3	**$3,200.00**	**$9,600.00**	*$3,380.00*	*$10,140.00*	$3,750.00	$11,250.00	$3,350.00	$10,050.00
	Interior	1	**$900.00**	**$900.00**	*$750.00*	*$750.00*	$1,500.00	$1,500.00	$740.00	$740.00
	Atrium Exterior	3	**$400.00**	**$1,200.00**	*$400.00*	*$1,200.00*	$550.00	$1,650.00	$400.00	$1,200.00
	Atrium Interior	1	**$2,800.00**	**$2,800.00**	*$3,250.00*	*$3,250.00*	$3,500.00	$3,500.00	$3,200.00	$3,200.00
	Davit/Tieback Annual Inspection	1	**$500.00**	**$500.00**	*$500.00*	*$500.00*	$750.00	$750.00	$1,400.00	$1,400.00
	5-Year Davit Load Test	1	**$2,000.00**	**$2,000.00**	*$1,140.00*	*$1,140.00*	$1,350.00	$1,350.00	$5,500.00	$5,500.00
11	**Tim Curry Criminal Justice Center (TCCJC)**									
	Exterior	3	**$4,100.00**	**$12,300.00**	*$4,450.00*	*$13,350.00*	$5,500.00	$16,500.00	$4,400.00	$13,200.00
	Interior	1	**$2,000.00**	**$2,000.00**	*$1,950.00*	*$1,950.00*	$2,500.00	$2,500.00	$1,900.00	$1,900.00
	Davit/Tieback Annual Inspection	1	**$500.00**	**$500.00**	*$500.00*	*$500.00*	$750.00	$750.00	$1,660.00	$1,660.00
	5-Year Davit Load Test	1	**$3,000.00**	**$3,000.00**	*$3,075.00*	*$3,075.00*	$3,200.00	$3,200.00	$6,500.00	$6,500.00

F2026015 Annual Contract for Window Washing Services

			Primary Award		*Secondary Award*					
			Jack & Joe's Cleaning, Inc. dba Squeegee Squad Columbus, MN HUB- No CO-Op - Yes		*Collin Glass Works, LLC dba Collin Window Cleaning Fort Worth, TX HUB - No CO-OP - Yes*		Rolling Suds Ft. Worth Metro (TNRA Corporation) Willow Park, TX *HUB- No*		D&A Building Services *Fort Worth, TX HUB- Yes*	
			Total Price	$187,835.00	Total Price	$191,575.00	Total Price	$231,030.00	Total Price	*$ 239,799.00*
Description		**QTY**	**Unit Price**	**Extension**	*Unit Price*	*Extension*	Unit Price	Extension	Unit Price	Extension
12	**Tom Vandergriff Civil Courts Building (TVCCB)**									
	Exterior	3	**$2,150.00**	**$6,450.00**	*$2,250.00*	*$6,750.00*	$3,000.00	$9,000.00	$2,200.00	$6,600.00
	Interior	1	**$1,500.00**	**$1,500.00**	*$1,695.00*	*$1,695.00*	$1,750.00	$1,750.00	$1,600.00	$1,600.00
	Davit/Tieback Annual Inspection	1	**$500.00**	**$500.00**	*$500.00*	*$500.00*	$750.00	$750.00	$1,650.00	$1,650.00
	5-Year Davit Load Test	1	**$3,100.00**	**$3,100.00**	*$2,950.00*	*$2,950.00*	$3,150.00	$3,150.00	$6,500.00	$6,500.00
13	**Carpenter Shop**									
	Exterior	3	**$50.00**	**$150.00**	*$50.00*	*$150.00*	$50.00	$150.00	$50.00	$150.00
	Interior	1	**$50.00**	**$50.00**	*$50.00*	*$50.00*	$50.00	$50.00	$50.00	$50.00
14	**Central Garage Facility**									
	Exterior	3	**$50.00**	**$150.00**	*$50.00*	*$150.00*	$50.00	$150.00	$50.00	$150.00
	Interior	1	**$50.00**	**$50.00**	*$50.00*	*$50.00*	$50.00	$50.00	$50.00	$50.00
15	**Cold Springs Jail (COLD)**									
	Exterior	3	**$500.00**	**$1,500.00**	*$500.00*	*$1,500.00*	$500.00	$1,500.00	$450.00	$1,350.00
	Interior	1	**$250.00**	**$250.00**	*$250.00*	*$250.00*	$250.00	$250.00	$200.00	$200.00
16	**Dionne Phillips Bagsby Southwest Subcourthouse (SW SUB)**									
	Exterior	3	**$1,500.00**	**$4,500.00**	*$1,610.00*	*$4,830.00*	$1,750.00	$5,250.00	$1,700.00	$5,100.00
	Interior	1	**$1,300.00**	**$1,300.00**	*$1,300.00*	*$1,300.00*	$1,500.00	$1,500.00	$1,200.00	$1,200.00
17	**Elections Center (EC)**									
	Exterior	3	**$80.00**	**$240.00**	*$70.00*	*$210.00*	$75.00	$225.00	$70.00	$210.00
	Interior	1	**$80.00**	**$80.00**	*$55.00*	*$55.00*	$70.00	$70.00	$55.00	$55.00
18	**Green Bay Jail (GBJ)**									
	Exterior	3	**$50.00**	**$150.00**	*$50.00*	*$150.00*	$50.00	$150.00	$70.00	$210.00
	Interior	1	**$75.00**	**$75.00**	*$75.00*	*$75.00*	$75.00	$75.00	$50.00	$50.00

F2026015 Annual Contract for Window Washing Services

			Primary Award		*Secondary Award*					
			Jack & Joe's Cleaning, Inc. dba Squeegee Squad Columbus, MN HUB- No CO-Op - Yes		*Collin Glass Works, LLC dba Collin Window Cleaning Fort Worth, TX HUB - No CO-OP - Yes*		Rolling Suds Ft. Worth Metro (TNRA Corporation) Willow Park, TX *HUB- No*		D&A Building Services *Fort Worth, TX HUB- Yes*	
			Total Price	$187,835.00	Total Price	$191,575.00	Total Price	$231,030.00	Total Price	*$ 239,799.00*
	Description	**QTY**	**Unit Price**	**Extension**	*Unit Price*	*Extension*	Unit Price	Extension	Unit Price	Extension
19	**Impound Facility**									
	Exterior	3	**$50.00**	**$150.00**	*$50.00*	*$150.00*	$50.00	$150.00	$50.00	$150.00
	Interior	1	**$50.00**	**$50.00**	*$25.00*	*$25.00*	$50.00	$50.00	$25.00	$25.00
20	**Medical Examiner's Office (MEO) & Medical Examiner's Laboratory (MEO)**									
	Exterior	3	**$500.00**	**$1,500.00**	*$500.00*	*$1,500.00*	$600.00	$1,800.00	$700.00	$2,100.00
	Interior	1	**$500.00**	**$500.00**	*$600.00*	*$600.00*	$600.00	$600.00	$600.00	$600.00
	Davit/Tieback Annual Inspection	1	**$500.00**	**$500.00**	*$500.00*	*$500.00*	$750.00	$750.00	$1,430.00	$1,430.00
	5-Year Davit Load Test	1	**$1,600.00**	**$1,600.00**	*$1,250.00*	*$1,250.00*	$1,400.00	$1,400.00	$5,500.00	$5,500.00
21	**Miller Avenue Administration Building (Miller)**									
	Exterior	3	**$385.00**	**$1,155.00**	*$385.00*	*$1,155.00*	$450.00	$1,350.00	$570.00	$1,710.00
	Interior	1	**$370.00**	**$370.00**	*$365.00*	*$365.00*	$375.00	$375.00	$570.00	$570.00
22	**Northeast Annex (NE ANX)**									
	Exterior	3	**$340.00**	**$1,020.00**	*$350.00*	*$1,050.00*	$400.00	$1,200.00	$300.00	$900.00
	Interior	1	**$290.00**	**$290.00**	*$300.00*	*$300.00*	$350.00	$350.00	$300.00	$300.00
23	**Northeast Courthouse**									
	Exterior	3	**$1,000.00**	**$3,000.00**	*$750.00*	*$2,250.00*	$850.00	$2,550.00	$750.00	$2,250.00
	Interior	1	**$1,000.00**	**$1,000.00**	*$650.00*	*$650.00*	$700.00	$700.00	$650.00	$650.00
	Lobby High Glass Exterior	3	**$200.00**	**$600.00**	*$250.00*	*$750.00*	$300.00	$900.00	$250.00	$750.00
	Lobby High Glass Interior	1	**$2,000.00**	**$2,000.00**	*$2,500.00*	*$2,500.00*	$2,500.00	$2,500.00	$2,500.00	$2,500.00
24	**North Patrol Building (NP BLDG)**									
	Exterior	3	**$100.00**	**$300.00**	*$65.00*	*$195.00*	$100.00	$300.00	$95.00	$285.00
	Interior	1	**$100.00**	**$100.00**	*$95.00*	*$95.00*	$75.00	$75.00	$75.00	$75.00

F2026015 Annual Contract for Window Washing Services

			Primary Award		*Secondary Award*					
			Jack & Joe's Cleaning, Inc. dba Squeegee Squad Columbus, MN HUB- No CO-Op - Yes		*Collin Glass Works, LLC dba Collin Window Cleaning Fort Worth, TX HUB - No CO-OP - Yes*		Rolling Suds Ft. Worth Metro (TNRA Corporation) Willow Park, TX *HUB- No*		D&A Building Services *Fort Worth, TX HUB- Yes*	
			Total Price	$187,835.00	Total Price	$191,575.00	Total Price	$231,030.00	Total Price	*$ 239,799.00*
	Description	**QTY**	**Unit Price**	**Extension**	*Unit Price*	*Extension*	Unit Price	Extension	Unit Price	Extension
25	**Northwest Annex (NW SUB)**									
	Exterior	3	**$125.00**	**$375.00**	*$150.00*	*$450.00*	$200.00	$600.00	$200.00	$600.00
	Interior	1	**$175.00**	**$175.00**	*$200.00*	*$200.00*	$150.00	$150.00	$150.00	$150.00
26	**Northwest Subcourthouse (NW SUB)**									
	Exterior	3	**$850.00**	**$2,550.00**	*$700.00*	*$2,100.00*	$1,000.00	$3,000.00	$1,500.00	$4,500.00
	Interior	1	**$650.00**	**$650.00**	*$765.00*	*$765.00*	$750.00	$750.00	$800.00	$800.00
	Hallway High Glass Exterior	3	**$320.00**	**$960.00**	*$325.00*	*$975.00*	$750.00	$2,250.00	$400.00	$1,200.00
	Hallway High Glass Interior	1	**$400.00**	**$400.00**	*$515.00*	*$515.00*	$750.00	$750.00	$500.00	$500.00
	Square Rotund Glass Exterior	3	**$100.00**	**$300.00**	*$75.00*	*$225.00*	$100.00	$300.00	$90.00	$270.00
	Square Rotund Glass Interior	1	**$500.00**	**$500.00**	*$610.00*	*$610.00*	$650.00	$650.00	$500.00	$500.00
	Davit/Tieback Annual Inspection	1	**$500.00**	**$500.00**	*$500.00*	*$500.00*	$750.00	$750.00	$1,660.00	$1,660.00
	5-Year Davit Load Test	1	**$4,000.00**	**$4,000.00**	*$3,975.00*	*$3,975.00*	$4,100.00	$4,100.00	$6,500.00	$6,500.00
27	**Precinct 1 Facility**									
	Exterior	3	**$150.00**	**$450.00**	*$175.00*	*$525.00*	$200.00	$600.00	$175.00	$525.00
	Interior	1	**$150.00**	**$150.00**	*$150.00*	*$150.00*	$150.00	$150.00	$150.00	$150.00
28	**Precinct 2 Facility**									
	Exterior	3	**$50.00**	**$150.00**	*$50.00*	*$150.00*	$50.00	$150.00	$175.00	$525.00
	Interior	1	**$50.00**	**$50.00**	*$50.00*	*$50.00*	$50.00	$50.00	$150.00	$150.00
29	**Precinct 3 Facility**									
	Exterior	3	**$95.00**	**$285.00**	*$95.00*	*$285.00*	$100.00	$300.00	$175.00	$525.00
	Interior	1	**$100.00**	**$100.00**	*$100.00*	*$100.00*	$100.00	$100.00	$150.00	$150.00
30	**Precinct 4 Facility**									
	Exterior	3	**$60.00**	**$180.00**	*$60.00*	*$180.00*	$60.00	$180.00	$120.00	$360.00
	Interior	1	**$50.00**	**$50.00**	*$50.00*	*$50.00*	$50.00	$50.00	$120.00	$120.00

F2026015 Annual Contract for Window Washing Services

			Primary Award		*Secondary Award*					
			Jack & Joe's Cleaning, Inc. dba Squeegee Squad Columbus, MN HUB- No CO-Op - Yes		*Collin Glass Works, LLC dba Collin Window Cleaning Fort Worth, TX HUB - No CO-OP - Yes*		Rolling Suds Ft. Worth Metro (TNRA Corporation) Willow Park, TX *HUB- No*		D&A Building Services *Fort Worth, TX HUB- Yes*	
			Total Price	$187,835.00	Total Price	$191,575.00	Total Price	$231,030.00	Total Price	*$ 239,799.00*
	Description	**QTY**	**Unit Price**	**Extension**	*Unit Price*	*Extension*	Unit Price	Extension	Unit Price	Extension
31	**Premier Annex/Fire Marshal (PA/FM)**									
	Exterior	3	**$100.00**	**$300.00**	*$60.00*	*$180.00*	$60.00	$180.00	$100.00	$300.00
	Interior	1	**$50.00**	**$50.00**	*$40.00*	*$40.00*	$50.00	$50.00	$100.00	$100.00
32	**Records Management (RMC)**									
	Exterior	3	**$180.00**	**$540.00**	*$150.00*	*$450.00*	$150.00	$450.00	$190.00	$570.00
	Interior	1	**$190.00**	**$190.00**	*$190.00*	*$190.00*	$200.00	$200.00	$130.00	$130.00
33	**Resource Connection (TCRC)**									
	Exterior	3	**$2,090.00**	**$6,270.00**	*$2,120.00*	*$6,360.00*	$2,135.00	$6,405.00	$2,500.00	$7,500.00
	Interior	1	**$2,360.00**	**$2,360.00**	*$2,080.00*	*$2,080.00*	$2,125.00	$2,125.00	$1,500.00	$1,500.00
34	**Scott D. Moore Juvenile Justice Center (LROSS)**									
	Exterior	3	**$1,250.00**	**$3,750.00**	*$1,300.00*	*$3,900.00*	$1,250.00	$3,750.00	$1,400.00	$4,200.00
	Interior	1	**$1,000.00**	**$1,000.00**	*$1,000.00*	*$1,000.00*	$1,000.00	$1,000.00	$1,000.00	$1,000.00
	Skylight Exterior	3	**$100.00**	**$300.00**	*$100.00*	*$300.00*	$150.00	$450.00	$150.00	$450.00
	Skylight Interior	3	**$250.00**	**$750.00**	*$300.00*	*$900.00*	$400.00	$1,200.00	$350.00	$1,050.00
35	**Southlake Town Hall (SO LK)**									
	Exterior	3	**$1,900.00**	**$5,700.00**	*$1,835.00*	*$5,505.00*	$2,500.00	$7,500.00	$1,790.00	$5,370.00
	Interior	1	**$950.00**	**$950.00**	*$935.00*	*$935.00*	$1,500.00	$1,500.00	$925.00	$925.00
36	**Subcourthouse in Mansfield (MANS)**									
	Exterior	3	**$500.00**	**$1,500.00**	*$550.00*	*$1,650.00*	$750.00	$2,250.00	$690.00	$2,070.00
	Interior	1	**$300.00**	**$300.00**	*$300.00*	*$300.00*	$400.00	$400.00	$300.00	$300.00
	Lobby High Glass Exterior	3	**$200.00**	**$600.00**	*$200.00*	*$600.00*	$450.00	$1,350.00	$220.00	$660.00
	Lobby High Glass Interior	1	**$650.00**	**$650.00**	*$700.00*	*$700.00*	$800.00	$800.00	$700.00	$700.00
	Skylight Glass Exterior	3	**$90.00**	**$270.00**	*$100.00*	*$300.00*	$150.00	$450.00	$150.00	$450.00
	Skylight Glass Interior	1	**$450.00**	**$450.00**	*$500.00*	*$500.00*	$750.00	$750.00	$500.00	$500.00

F2026015 Annual Contract for Window Washing Services

			Primary Award		*Secondary Award*					
			Jack & Joe's Cleaning, Inc. dba Squeegee Squad Columbus, MN HUB- No CO-Op - Yes		*Collin Glass Works, LLC dba Collin Window Cleaning Fort Worth, TX HUB - No CO-OP - Yes*		Rolling Suds Ft. Worth Metro (TNRA Corporation) Willow Park, TX *HUB- No*		D&A Building Services *Fort Worth, TX HUB- Yes*	
			Total Price	$187,835.00	Total Price	$191,575.00	Total Price	$231,030.00	Total Price	*$ 239,799.00*
	Description	**QTY**	**Unit Price**	**Extension**	*Unit Price*	*Extension*	Unit Price	Extension	Unit Price	Extension
37	**Subcourthouse in Arlington (ARL)**									
	Exterior	3	**$950.00**	**$2,850.00**	*$960.00*	*$2,880.00*	$1,000.00	$3,000.00	$1,000.00	$3,000.00
	Interior	1	**$550.00**	**$550.00**	*$500.00*	*$500.00*	$600.00	$600.00	$500.00	$500.00
	Lobby High Glass Exterior	3	**$450.00**	**$1,350.00**	*$480.00*	*$1,440.00*	$550.00	$1,650.00	$500.00	$1,500.00
	Lobby High Glass Interior	1	**$1,250.00**	**$1,250.00**	*$1,350.00*	*$1,350.00*	$1,500.00	$1,500.00	$1,350.00	$1,350.00
	Rotunda Glass Exterior	3	**$150.00**	**$450.00**	*$50.00*	*$150.00*	$100.00	$300.00	$100.00	$300.00
	Rotunda Glass Interior	1	**$400.00**	**$400.00**	*$200.00*	*$200.00*	$375.00	$375.00	$200.00	$200.00
	Davit/Tieback Annual Inspection	1	**$500.00**	**$500.00**	*$500.00*	*$500.00*	$750.00	$750.00	$1,660.00	$1,660.00
	5-Year Davit Load Test	1	**$1,500.00**	**$1,500.00**	*$1,250.00*	*$1,250.00*	$2,500.00		$6,500.00	$6,500.00
38	**Mental Health Jail Diversion**									
	Exterior	3	**$1,550.00**	**$4,650.00**	*$1,600.00*	*$4,800.00*	$1,500.00	$4,500.00	$1,580.00	$4,740.00
	Interior	1	**$1,200.00**	**$1,200.00**	*$1,200.00*	*$1,200.00*	$1,500.00	$1,500.00	$1,200.00	$1,200.00
	Davit/Tieback Annual Inspection	1	**$500.00**	**$500.00**	*$500.00*	*$500.00*	$750.00	$750.00	$1,660.00	$1,660.00
39	**Dr. Marion J. Brooks Public Health Building**									
	Exterior	3	**$950.00**	**$2,850.00**	*$1,000.00*	*$3,000.00*	$1,100.00	$3,300.00	$1,580.00	$4,740.00
	Interior	1	**$1,150.00**	**$1,150.00**	*$1,200.00*	*$1,200.00*	$1,300.00	$1,300.00	$1,200.00	$1,200.00
40	**WIC - Arkansas Clinic**									
	Exterior	3	**$50.00**	**$150.00**	*$50.00*	*$150.00*	$40.00	$120.00	$25.00	$75.00
	Interior	1	**$50.00**	**$50.00**	*$50.00*	*$50.00*	$40.00	$40.00	$25.00	$25.00
41	**WIC - Eastside Clinic**									
	Exterior	3	**$50.00**	**$150.00**	*$50.00*	*$150.00*	$40.00	$120.00	$30.00	$90.00
	Interior	1	**$50.00**	**$50.00**	*$50.00*	*$50.00*	$40.00	$40.00	$30.00	$30.00

F2026015 Annual Contract for Window Washing Services

			Primary Award		*Secondary Award*					
			Jack & Joe's Cleaning, Inc. dba Squeegee Squad Columbus, MN HUB- No CO-Op - Yes		*Collin Glass Works, LLC dba Collin Window Cleaning Fort Worth, TX HUB - No CO-OP - Yes*		Rolling Suds Ft. Worth Metro (TNRA Corporation) Willow Park, TX *HUB- No*		D&A Building Services *Fort Worth, TX HUB- Yes*	
			Total Price	$187,835.00	Total Price	$191,575.00	Total Price	$231,030.00	Total Price	*$ 239,799.00*
	Description	**QTY**	**Unit Price**	**Extension**	*Unit Price*	*Extension*	Unit Price	Extension	Unit Price	Extension
42	**WIC - Euless Clinic**									
	Exterior	3	**$50.00**	**$150.00**	*$50.00*	*$150.00*	$40.00	$120.00	$25.00	$75.00
	Interior	1	**$50.00**	**$50.00**	*$50.00*	*$50.00*	$40.00	$40.00	$25.00	$25.00
43	**WIC - Fiesta Clinic**									
	Exterior	3	**$50.00**	**$150.00**	*$50.00*	*$150.00*	$40.00	$120.00	$30.00	$90.00
	Interior	1	**$50.00**	**$50.00**	*$50.00*	*$50.00*	$40.00	$40.00	$40.00	$40.00
44	**WIC - Green Oaks Clinic**									
	Exterior	3	**$50.00**	**$150.00**	*$50.00*	*$150.00*	$40.00	$120.00	$30.00	$90.00
	Interior	1	**$50.00**	**$50.00**	*$50.00*	*$50.00*	$40.00	$40.00	$30.00	$30.00
45	**WIC - Haltom City Clinic**									
	Exterior	3	**$50.00**	**$150.00**	*$50.00*	*$150.00*	$40.00	$120.00	$25.00	$75.00
	Interior	1	**$50.00**	**$50.00**	*$50.00*	*$50.00*	$40.00	$40.00	$25.00	$25.00
46	**WIC -White Settlement Clinic**									
	Exterior	3	**$50.00**	**$150.00**	*$50.00*	*$150.00*	$40.00	$120.00	$30.00	$90.00
	Interior	1	**$50.00**	**$50.00**	*$50.00*	*$50.00*	$40.00	$40.00	$30.00	$30.00
47	**Power Washing Upon Request**									
	Regular Business Hours: Monday-Friday 8:00am to 5:00pm	1	**$100.00**	**$100.00**	*$60.00*	*$60.00*	$75.00	$75.00	$55.00	$55.00
	Non-Business Hours: Weekdays, and all day on Saturdays and Sundays 5:01pm to 7:59am	1	**$100.00**	**$100.00**	*$90.00*	*$90.00*	$95.00	$95.00	$90.00	$90.00
	Holiday Work Hours	1	**$100.00**	**$100.00**	*$90.00*	*$90.00*	$100.00	$100.00	$90.00	$90.00

F2026015 Annual Contract for Window Washing Services

		Primary Award		*Secondary Award*					
		Jack & Joe's Cleaning, Inc. dba Squeegee Squad Columbus, MN HUB- No CO-Op - Yes		*Collin Glass Works, LLC dba Collin Window Cleaning Fort Worth, TX HUB - No CO-OP - Yes*		Rolling Suds Ft. Worth Metro (TNRA Corporation) Willow Park, TX *HUB- No*		D&A Building Services *Fort Worth, TX HUB- Yes*	
		Total Price	$187,835.00	Total Price	$191,575.00	Total Price	$231,030.00	Total Price	*$ 239,799.00*
Description	**QTY**	**Unit Price**	**Extension**	*Unit Price*	*Extension*	Unit Price	Extension	Unit Price	Extension

Notes: A no-bid response was received from Richmond Equipment (Jamie Crandall Equipment Corp.), Complete Supply, Inc., TDIndustries, Inc. (TD Industries), Shirt Fanatic LLC, and Kleen Tech.

TARRANT COUNTY

DEPARTMENT OF FACILITIES MANAGEMENT

November 18, 2025

Jill Stine
Buyer
Tarrant County Purchasing Department
100 East Weatherford, Suite 303
Fort Worth, TX 76196

Subject: F2026015 Annual Contract for Window Washing Services

Re: Approval of Low Bidder

Ms. Stine,

Tarrant County Facilities Management (TCFM) has completed its evaluation of the bids and supporting documentation submitted for Bid No. F2026015 – Annual Contract for Window Washing Services.

Following a thorough review, TCFM has determined that all four contractors meet the required qualifications and possess the capacity to successfully perform the scope of work outlined in the solicitation.

Based on this assessment, TCFM recommends awarding the contract to Squeegee Squad as the primary vendor and Collins Glass Works LLC as the secondary vendor.

Tarrant County Facilities Management

Sincerely,

Joshua B. Palmer

Joshua B. Palmer
Tarrant County Facilities Management
200 North Taylor St., Suite 344
Fort Worth, TX 76196

TAKINGS IMPACT ASSESSMENT CHECKLIST

Complete this form for any county action that involves the adoption of a regulation, policy, guideline, court resolution, or order.

Project/Regulation Name: Bid No. F2026015 - Annual Contract for Window Washing Services – Facilities Management – Various Vendors – Per Unit Price

County Department: PURCHASING

Contact Person: Melissa Lee, C.P.M., A.P.P.

Phone Number for Contact Person: (817) 884-3245

Type of TIA Performed: (SHORT TIA) or FULL TIA. Circle one after answering the questions in Sections II and III below.

****

I. Stated Purpose

Attach to this checklist an explanation of the purpose of the regulation, policy, guideline, court resolution or order.

****

Note: The remainder of this Takings Impact Assessment Checklist should be completed in consultation with the Criminal District Attorney's Office.

II. Potential Effect on Private Real Property

1. Does the county action require a physical invasion, occupation or dedication of real property?

   Yes_____ No __√__

2. Does the county action limit or restrict a real property right, even partially or temporarily?

   Yes_____ No __√__

If you answered yes to either question, go to Section III. If you answered no to both, STOP HERE and circle SHORT TIA at the top of the form.

****

TARRANT COUNTY
COMMISSIONERS COURT COMMUNICATION

Court Date: December 9, 2025	**Court Order #:**	**Page:** 1 of 11
Department: Purchasing	**Prepared By:** Wanyu Chen	**Approved By:** Christopher Lax, CPSM, CPSD, CPCP

SUBJECT:

Bid No. F2026020 - Purchase of Veeam Subscription Licenses - Information Technology - Asimer Tech, LLC

COMMISSIONERS COURT ACTION REQUESTED

It is requested that the Commissioners Court award Bid No. F2026020, Purchase of Veeam Subscription Licenses, for Information Technology, with Asimer Tech, LLC for $159,265.60.

BACKGROUND

Notice of the County's intent to bid was advertised in a local newspaper, as required by State statute, and posted on the Internet, the Arlington Black Chamber of Commerce, the Fort Worth Hispanic Chamber of Commerce, the Fort Worth Metropolitan Black Chamber of Commerce, and the Tarrant County Asian American Chamber of Commerce. One thousand fifty-six (1056) vendors were contacted and requested to participate in this bid process. All documents pertaining to this bid were posted on the Tarrant County website and were downloaded by interested bidders. Twenty-four (24) bids and nine (9) no-bids were received.

The low bid received from Asimer Tech, LLC meets all specifications and is acceptable to Information Technology.

Due to a clerical error on the part of the software developer, the contract requires correction to align its term with the applicable co-terminus agreements, making the contract effective through January 31, 2027.

This purchase is for the continuation of existing Veeam subscription. It is for a cloud backup solution that provides data protection for both on-premise and Microsoft 365 cloud resources. The software will enhance Tarrant County's data protection and disaster recovery capabilities while aligning with Information Technology's cloud-first strategy and the goal to modernize the IT infrastructure.

Therefore, it is the joint recommendation of Information Technology and Purchasing that Bid No. F2026020, Purchase of Veeam Subscription Licenses, be awarded to Asimer Tech, LLC for $159,265.60.

FISCAL IMPACT

Expenses for the last twelve (12) months were $162,990.00. Funding in the amount of $159,265.60 is available in account 10000-2026 General Fund/1810201000 Network Operations and Communication/578025 Software Maintenance and Licenses.

Attachments

Backup.pdf

Bid No. F2026020 Purchase of Veeam Subscription Licenses

					Award					
					Asimer Tech LLC Austin, TX HUB - No COOP - Yes		Square Technology Carrollton, TX HUB - No		Alxtel, Inc. Silver Spring, MD HUB - No	
					Total Price	**$159,265.60**	Total Price	$160,212.80	Total Price	$162,929.20
Line #	Description	Mfgno	QTY	UOM	Unit	Extended	Unit	Extended	Unit	Extended
1.1	Veeam Backup for Microsoft 365. 1 Year Renewal Subscription Upfront Billing & Production (24/7) Support.	P-VBO365-0U-SU1AR-00	5500	EA	**$16.05**	**$88,275.00**	$16.14	$88,770.00	$16.42	$90,310.00
1.2	Veeam Data Platform Advanced Universal Subscription License. Includes Enterprise Plus Edition features. 1 Year Renewal Subscription Upfront Billing & Production (24/7) Support. 10 instance pack.	P-ADVVUL-0I-SU1AR-00	60	EA	**$874.29**	**$52,457.40**	$879.93	$52,795.80	$891.12	$53,467.20
1.3	Veeam Backup for Microsoft 365. Subscription Upfront Billing & Production (24/7) Support Renewal Monthly Co-term.	V-VBO365-0U-SU1MR-00	5500	EA	**$1.78**	**$9,790.00**	$1.79	$9,845.00	$1.86	$10,230.00
1.4	Veeam Data Platform Advanced Universal Subscription License. Includes Enterprise Plus Edition features. Subscription Upfront Billing 10 instance pack. & Production (24/7) Support - Renewal Monthly Co-term.	V-ADVVUL-0I-SU1MR-00	120	EA	**$72.86**	**$8,743.20**	$73.35	$8,802.00	$74.35	$8,922.00

Notes: No Bid received from 3-C TECHNOLOGY, LLC, CSI Leasing, Inc., GOOGOZ.COM, INC. Presidio Holdings Inc. dba Presidio Networked Solutions Group, LLC, Richmond Equipment dba Jamie Crandall Equipment Corp., SecurityScorecard, Inc., Shirt Fanatics LLC, Tall City Cyber LLC, and TDIndustries, Inc.

Bid No. F2026020 Purchase of Veeam Subscription Licenses

					Axelliant LLC Torrance, CA HUB - No		CAN-AM Wireless LLC Cedar Park, TX HUB - Yes		Software Information Resource Corp. Washington, DC HUB - Yes	
					Total Price	$163,371.40	Total Price	$163,642.20	Total Price	$163,839.23
Line #	Description	Mfgno	QTY	UOM	Unit	Extended	Unit	Extended	Unit	Extended
1.1	Veeam Backup for Microsoft 365. 1 Year Renewal Subscription Upfront Billing & Production (24/7) Support.	P-VBO365-0U-SU1AR-00	5500	EA	$16.48	$90,640.00	$16.49	$90,695.00	$1.8377	$10,107.35
1.2	Veeam Data Platform Advanced Universal Subscription License. Includes Enterprise Plus Edition features. 1 Year Renewal Subscription Upfront Billing & Production (24/7) Support. 10 instance pack.	P-ADVVUL-0I-SU1AR-00	60	EA	$897.59	$53,855.40	$899.89	$53,993.40	$899.1081	$53,946.49
1.3	Veeam Backup for Microsoft 365. Subscription Upfront Billing & Production (24/7) Support Renewal Monthly Co-term.	V-VBO365-0U-SU1MR-00	5500	EA	$1.80	$9,900.00	$1.81	$9,955.00	$16.508	$90,794.00
1.4	Veeam Data Platform Advanced Universal Subscription License. Includes Enterprise Plus Edition features. Subscription Upfront Billing 10 instance pack. & Production (24/7) Support - Renewal Monthly Co-term.	V-ADVVUL-0I-SU1MR-00	120	EA	$74.80	$8,976.00	$74.99	$8,998.80	$74.9283	$8,991.40

Notes: No Bid received from 3-C TECHNOLOGY, LLC, CSI Leasing, Inc., GOOGOZ.COM, INC. Presidio Holdings Inc. dba Presidio Networked Solutions Group, LLC, Richmond Equipment dba Jamie Crandall Equipment Corp., SecurityScorecard, Inc., Shirt Fanatics LLC, Tall City Cyber LLC, and TDIndustries, Inc.

Bid No. F2026020 Purchase of Veeam Subscription Licenses

					New Tech Solutions, Inc. Fremont, CA HUB - No		Concourse Tech, Inc. New York, NY HUB - No		vCloud Tech, Inc. Rolling Hills Estates, CA HUB - Yes	
					Total Price	$163,973.40	Total Price	$164,068.60	Total Price	$164,091.60
Line #	Description	Mfgno	QTY	UOM	Unit	Extended	Unit	Extended	Unit	Extended
1.1	Veeam Backup for Microsoft 365. 1 Year Renewal Subscription Upfront Billing & Production (24/7) Support.	P-VBO365-0U-SU1AR-00	5500	EA	$16.52	$90,860.00	$16.53	$90,915.00	$16.55	$91,025.00
1.2	Veeam Data Platform Advanced Universal Subscription License. Includes Enterprise Plus Edition features. 1 Year Renewal Subscription Upfront Billing & Production (24/7) Support. 10 instance pack.	P-ADVVUL-0I-SU1AR-00	60	EA	$899.91	$53,994.60	$900.48	$54,028.80	$901.60	$54,096.00
1.3	Veeam Backup for Microsoft 365. Subscription Upfront Billing & Production (24/7) Support Renewal Monthly Co-term.	V-VBO365-0U-SU1MR-00	5500	EA	$1.84	$10,120.00	$1.84	$10,120.00	$1.81	$9,955.00
1.4	Veeam Data Platform Advanced Universal Subscription License. Includes Enterprise Plus Edition features. Subscription Upfront Billing 10 instance pack. & Production (24/7) Support - Renewal Monthly Co-term.	V-ADVVUL-0I-SU1MR-00	120	EA	$74.99	$8,998.80	$75.04	$9,004.80	$75.13	$9,015.60

Notes: No Bid received from 3-C TECHNOLOGY, LLC, CSI Leasing, Inc., GOOGOZ.COM, INC. Presidio Holdings Inc. dba Presidio Networked Solutions Group, LLC, Richmond Equipment dba Jamie Crandall Equipment Corp., SecurityScorecard, Inc., Shirt Fanatics LLC, Tall City Cyber LLC, and TDIndustries, Inc.

Bid No. F2026020 Purchase of Veeam Subscription Licenses

					Aztek Computers LLC Carrollton, TX HUB - No		Sai Infotek, Inc. Westborough, MA HUB - No		American Business Solutions, Inc. Columbus, OH HUB - No	
					Total Price	$164,945.00	Total Price	$165,046.40	Total Price	$165,445.00
Line #	Description	Mfgno	QTY	UOM	Unit	Extended	Unit	Extended	Unit	Extended
1.1	Veeam Backup for Microsoft 365. 1 Year Renewal Subscription Upfront Billing & Production (24/7) Support.	P-VBO365-0U-SU1AR-00	5500	EA	$16.86	$92,730.00	$16.65	$91,575.00	$16.65	$91,575.00
1.2	Veeam Data Platform Advanced Universal Subscription License. Includes Enterprise Plus Edition features. 1 Year Renewal Subscription Upfront Billing & Production (24/7) Support. 10 instance pack.	P-ADVVUL-0I-SU1AR-00	60	EA	$891.00	$53,460.00	$906.59	$54,395.40	$905.00	$54,300.00
1.3	Veeam Backup for Microsoft 365. Subscription Upfront Billing & Production (24/7) Support Renewal Monthly Co-term.	V-VBO365-0U-SU1MR-00	5500	EA	$1.79	$9,845.00	$1.82	$10,010.00	$1.90	$10,450.00
1.4	Veeam Data Platform Advanced Universal Subscription License. Includes Enterprise Plus Edition features. Subscription Upfront Billing 10 instance pack. & Production (24/7) Support - Renewal Monthly Co-term.	V-ADVVUL-0I-SU1MR-00	120	EA	$74.25	$8,910.00	$75.55	$9,066.00	$76.00	$9,120.00

Notes: No Bid received from 3-C TECHNOLOGY, LLC, CSI Leasing, Inc., GOOGOZ.COM, INC. Presidio Holdings Inc. dba Presidio Networked Solutions Group, LLC, Richmond Equipment dba Jamie Crandall Equipment Corp., SecurityScorecard, Inc., Shirt Fanatics LLC, Tall City Cyber LLC, and TDIndustries, Inc.

Bid No. F2026020 Purchase of Veeam Subscription Licenses

					Hypertec USA, Inc. Tempe, AZ HUB - No		Princeton IT Services, Inc. Princeton, NJ HUB - Yes		Digital Net Solution LLC Bronx, NY HUB - No	
					Total Price	$165,447.00	Total Price	$165,503.20	Total Price	$166,846.60
Line #	Description	Mfgno	QTY	UOM	Unit	Extended	Unit	Extended	Unit	Extended
1.1	Veeam Backup for Microsoft 365. 1 Year Renewal Subscription Upfront Billing & Production (24/7) Support.	P-VBO365-0U-SU1AR-00	5500	EA	$16.69	$91,795.00	$16.69	$91,795.00	$16.83	$92,565.00
1.2	Veeam Data Platform Advanced Universal Subscription License. Includes Enterprise Plus Edition features. 1 Year Renewal Subscription Upfront Billing & Production (24/7) Support. 10 instance pack.	P-ADVVUL-0I-SU1AR-00	60	EA	$909.18	$54,550.80	$909.18	$54,550.80	$916.60	$54,996.00
1.3	Veeam Backup for Microsoft 365. Subscription Upfront Billing & Production (24/7) Support Renewal Monthly Co-term.	V-VBO365-0U-SU1MR-00	5500	EA	$1.82	$10,010.00	$1.83	$10,065.00	$1.84	$10,120.00
1.4	Veeam Data Platform Advanced Universal Subscription License. Includes Enterprise Plus Edition features. Subscription Upfront Billing 10 instance pack. & Production (24/7) Support - Renewal Monthly Co-term.	V-ADVVUL-0I-SU1MR-00	120	EA	$75.76	$9,091.20	$75.77	$9,092.40	$76.38	$9,165.60

Notes: No Bid received from 3-C TECHNOLOGY, LLC, CSI Leasing, Inc., GOOGOZ.COM, INC. Presidio Holdings Inc. dba Presidio Networked Solutions Group, LLC, Richmond Equipment dba Jamie Crandall Equipment Corp., SecurityScorecard, Inc., Shirt Fanatics LLC, Tall City Cyber LLC, and TDIndustries, Inc.

Bid No. F2026020 Purchase of Veeam Subscription Licenses

					HiEd, Inc. Allen, TX HUB - Yes		General Datatech, LP Dallas, TX HUB - No		Tekgration LLC San Antonio, TX HUB - Yes	
					Total Price	$167,493.20	Total Price	$168,978.00	Total Price	$170,648.60
Line #	Description	Mfgno	QTY	UOM	Unit	Extended	Unit	Extended	Unit	Extended
1.1	Veeam Backup for Microsoft 365. 1 Year Renewal Subscription Upfront Billing & Production (24/7) Support.	P-VBO365-0U-SU1AR-00	5500	EA	$16.89	$92,895.00	$17.06	$93,830.00	$17.22	$94,710.00
1.2	Veeam Data Platform Advanced Universal Subscription License. Includes Enterprise Plus Edition features. 1 Year Renewal Subscription Upfront Billing & Production (24/7) Support. 10 instance pack.	P-ADVVUL-0I-SU1AR-00	60	EA	$917.99	$55,079.40	$929.02	$55,741.20	$936.99	$56,219.40
1.3	Veeam Backup for Microsoft 365. Subscription Upfront Billing & Production (24/7) Support Renewal Monthly Co-term.	V-VBO365-0U-SU1MR-00	5500	EA	$1.88	$10,340.00	$1.84	$10,120.00	$1.88	$10,340.00
1.4	Veeam Data Platform Advanced Universal Subscription License. Includes Enterprise Plus Edition features. Subscription Upfront Billing 10 instance pack. & Production (24/7) Support - Renewal Monthly Co-term.	V-ADVVUL-0I-SU1MR-00	120	EA	$76.49	$9,178.80	$77.39	$9,286.80	$78.16	$9,379.20

Notes: No Bid received from 3-C TECHNOLOGY, LLC, CSI Leasing, Inc., GOOGOZ.COM, INC. Presidio Holdings Inc. dba Presidio Networked Solutions Group, LLC, Richmond Equipment dba Jamie Crandall Equipment Corp., SecurityScorecard, Inc., Shirt Fanatics LLC, Tall City Cyber LLC, and TDIndustries, Inc.

Bid No. F2026020 Purchase of Veeam Subscription Licenses

					Intech Southwest Services, LLC San Antonio, TX HUB - No		NEWCOM Wireless Services, LLC Pembroke, MA HUB - No		Jet Web Communication, LLC San Antonio, TX HUB - Yes	
					Total Price	$170,707.40	Total Price	$172,075.00	Total Price	$179,360.80
Line #	Description	Mfgno	QTY	UOM	Unit	Extended	Unit	Extended	Unit	Extended
1.1	Veeam Backup for Microsoft 365. 1 Year Renewal Subscription Upfront Billing & Production (24/7) Support.	P-VBO365-0U-SU1AR-00	5500	EA	$17.22	$94,710.00	$17.00	$93,500.00	$18.16	$99,880.00
1.2	Veeam Data Platform Advanced Universal Subscription License. Includes Enterprise Plus Edition features. 1 Year Renewal Subscription Upfront Billing & Production (24/7) Support. 10 instance pack.	P-ADVVUL-0I-SU1AR-00	60	EA	$937.99	$56,279.40	$950.00	$57,000.00	$989.30	$59,358.00
1.3	Veeam Backup for Microsoft 365. Subscription Upfront Billing & Production (24/7) Support Renewal Monthly Co-term.	V-VBO365-0U-SU1MR-00	5500	EA	$1.88	$10,340.00	$1.85	$10,175.00	$1.86	$10,230.00
1.4	Veeam Data Platform Advanced Universal Subscription License. Includes Enterprise Plus Edition features. Subscription Upfront Billing 10 instance pack. & Production (24/7) Support - Renewal Monthly Co-term.	V-ADVVUL-0I-SU1MR-00	120	EA	$78.15	$9,378.00	$95.00	$11,400.00	$82.44	$9,892.80

Notes: No Bid received from 3-C TECHNOLOGY, LLC, CSI Leasing, Inc., GOOGOZ.COM, INC. Presidio Holdings Inc. dba Presidio Networked Solutions Group, LLC, Richmond Equipment dba Jamie Crandall Equipment Corp., SecurityScorecard, Inc., Shirt Fanatics LLC, Tall City Cyber LLC, and TDIndustries, Inc.

Bid No. F2026020 Purchase of Veeam Subscription Licenses

					GB Tech, Inc. Houston, TX HUB - Yes		Nfina Technologies, Inc. Mobile, AL HUB - No		Cadre Computer Resources Co. Cincinnati, OH HUB - No	
					Total Price	$187,164.00	Total Price	$190,583.60	Total Price	$196,016.40
Line #	Description	Mfgno	QTY	UOM	Unit	Extended	Unit	Extended	Unit	Extended
1.1	Veeam Backup for Microsoft 365. 1 Year Renewal Subscription Upfront Billing & Production (24/7) Support.	P-VBO365-0U-SU1AR-00	5500	EA	$19.01	$104,555.00	$18.58	$102,190.00	$19.95	$109,725.00
1.2	Veeam Data Platform Advanced Universal Subscription License. Includes Enterprise Plus Edition features. 1 Year Renewal Subscription Upfront Billing & Production (24/7) Support. 10 instance pack.	P-ADVVUL-0I-SU1AR-00	60	EA	$1,035.55	$62,133.00	$1,104.06	$66,243.60	$1,086.59	$65,195.40
1.3	Veeam Backup for Microsoft 365. Subscription Upfront Billing & Production (24/7) Support Renewal Monthly Co-term.	V-VBO365-0U-SU1MR-00	5500	EA	$1.84	$10,120.00	$2.02	$11,110.00	$1.86	$10,230.00
1.4	Veeam Data Platform Advanced Universal Subscription License. Includes Enterprise Plus Edition features. Subscription Upfront Billing 10 instance pack. & Production (24/7) Support - Renewal Monthly Co-term.	V-ADVVUL-0I-SU1MR-00	120	EA	$86.30	$10,356.00	$92.00	$11,040.00	$90.55	$10,866.00

Notes: No Bid received from 3-C TECHNOLOGY, LLC, CSI Leasing, Inc., GOOGOZ.COM, INC. Presidio Holdings Inc. dba Presidio Networked Solutions Group, LLC, Richmond Equipment dba Jamie Crandall Equipment Corp., SecurityScorecard, Inc., Shirt Fanatics LLC, Tall City Cyber LLC, and TDIndustries, Inc.

INFORMATION TECHNOLOGY
Empowering Innovation
Driving Excellence

Chief Information & Artificial Intelligence Officer
André Mendes

Chief Administrative Officer
Cecilia Webb

Chief Information Security Officer
Russell Scott

Deputy CIO Cloud, Infrastructure & Operations
Anthony Jackson

Deputy CIO Enterprise Applications
Michael Webb

Assistant CIO Governance
Adepeju Ajunwon

Assistant CIO Organizational Change Management & Support Services
Carolyn J. Bogan

Our vision is to be the best IT organization in state and local government within the United States.

200 Taylor Street
Fort Worth, TX 76196

Phone: 817.884.3888
Fax: 817.212.3060

www.tarrantcountytx.gov

11/5/2025

Wanyu Chen
Senior Buyer
100 E. Weatherford Street, Suite 303
Fort Worth, Texas 76196

Re: F2026020 - Purchase of Veeam Subscription Licenses

Dear Ms. Chen:

After evaluation of the information provided in the responses, Tarrant County Information Technology Department recommends award of bid F2026020 to Asimer Tech LLC.

Very sincerely,

Rodney Crockett
Rodney Crockett (11/05/2025 14:08:44 CST)

Rodney Crockett
Sr. IT Resource Manager

TAKINGS IMPACT ASSESSMENT CHECKLIST

Complete this form for any county action that involves the adoption of a regulation, policy, guideline, court resolution, or order.

Project/Regulation Name: Bid No. F2026020 - Purchase of Veeam Subscription Licenses - Information Technology - Asimer Tech LLC

County Department: PURCHASING
Contact Person: Melissa Lee, C.P.M., A.P.P.
Phone Number for Contact Person: (817) 884-3245

Type of TIA Performed: (SHORT TIA) or FULL TIA. Circle one after answering the questions in Sections II and III below.

****

I.Stated Purpose

Attach to this checklist an explanation of the purpose of the regulation, policy, guideline, court resolution or order.

****

Note: The remainder of this Takings Impact Assessment Checklist should be completed in consultation with the Criminal District Attorney's Office.

II. Potential Effect on Private Real Property

1. Does the county action require a physical invasion, occupation or dedication of real property?

   Yes_____ No __√__

2. Does the county action limit or restrict a real property right, even partially or temporarily?

   Yes_____ No __√__

   If you answered yes to either question, go to Section III. If you answered no to both, STOP HERE and circle SHORT TIA at the top of the form.

****

TARRANT COUNTY
COMMISSIONERS COURT COMMUNICATION

Court Date: December 16, 2025	**Court Order #:**	**Page:** 1 of 6
Department: Purchasing	**Prepared By:** Allan Tucker	**Approved By:** Christopher Lax, CPSM, CPSD, CPCP

SUBJECT:

Bid No. F2026021 - Annual Contract for Specialized Electrical Services - Facilities Management - Various Vendors - Per Hourly Rates

COMMISSIONERS COURT ACTION REQUESTED

It is requested that the Commissioners Court award Bid No. F2026021, Annual Contract for Specialized Electrical Services, for Facilities Management, to the following vendors at the per hourly rates:

Primary	Lone Star Electric Humphrey & Associates, Inc. TDIndustries, Inc.

BACKGROUND

Notice of the County's intent to bid was advertised in a local newspaper, as required by State statute, and posted on the Internet, the Arlington Black Chamber of Commerce, the Fort Worth Hispanic Chamber of Commerce, the Fort Worth Metropolitan Black Chamber of Commerce, and the Tarrant County Asian American Chamber of Commerce. Four hundred seventy one (471) vendors were contacted and requested to participate in this bid process. All documents pertaining to this bid were posted on the Tarrant County website and were downloaded by interested bidders. A pre-bid conference held on October 29, 2025 was attended by four (4) vendors as well as representatives from Facilities Management and Purchasing. Four (4) bids and two (2) no-bids were received.

Bids were evaluated by Facilities Management and Purchasing representatives. Award recommendations are to the low bids meeting specifications.

Texas Industrial Infrastructure Services LLC withdrew their bid.

The term of the contract is twelve (12) months, effective January 7, 2026.

Subject to continued funding by the Commissioners Court, this agreement shall automatically renew January 7, 2027 and January 7, 2028, hereafter for two (2) twelve (12) month periods ending on January 6, 2029, unless sooner terminated by either party as provided herein.

This contract is for the provision of expert electrical services, including installation, maintenance, and repair of electrical systems of various Tarrant County facilities.

Therefore, it is the joint recommendation of Facilities Management and Purchasing that Bid No. F2026021, Annual Contract for Specialized Electrical Services, be awarded to the vendors listed above at the per hourly rates.

FISCAL IMPACT

Expenses for the last twelve (12) months were $23,600.00. Funding is available in account 10000-2026 General Fund/Multiple Cost Centers/532011 Building Maintenance.

Attachments

Backup v2.pdf

				Award		Award		Award	
				Lone Star Electric Fort Worth, TX HUB - NO CO-OP - Yes		**Humphrey & Associates, Inc. Carrolton, TX HUB - No CO-OP - Yes**		**TDIndustries, Inc. Fort Worth, TX HUB - No CO-OP - Yes**	
				Total Price	**$4,182.00**	Total Price	**$4,680.00**	Total Price	**$5,780.00**
Line #	Description	QTY	UOM	Unit	Extended	Unit	Extended	Unit	Extended
2	**Monday - Friday 8:00am to 5:00pm**			**$ 2,035.00**	**$ 2,035.00**	**$ 2,245.00**	**$ 2,245.00**	**$ 2,775.00**	**$ 2,775.00**
2.1	Master Electrician	5	Per Hour	**$ 111.00**	**$ 555.00**	**$ 135.00**	**$ 675.00**	**$ 135.00**	**$ 675.00**
2.2	Licensed Journeyman	10	Per Hour	**$ 88.00**	**$ 880.00**	**$ 96.00**	**$ 960.00**	**$ 115.00**	**$ 1,150.00**
2.3	Helper	10	Per Hour	**$ 60.00**	**$ 600.00**	**$ 61.00**	**$ 610.00**	**$ 95.00**	**$ 950.00**
3	**Monday - Friday 5:01pm to 7:59amWeekends All-Day**			**$ 1,654.00**	**$ 1,654.00**	**$ 1,851.00**	**$ 1,851.00**	**$ 2,477.50**	**$ 2,477.50**
3.1	Master Electrician	1	Per Hour	**$ 163.00**	**$ 163.00**	**$ 202.50**	**$ 202.50**	**$ 202.50**	**$ 202.50**
3.2	Licensed Journeyman	7	Per Hour	**$ 127.00**	**$ 889.00**	**$ 144.00**	**$ 1,008.00**	**$ 172.50**	**$ 1,207.50**
3.3	Helper	7	Per Hour	**$ 86.00**	**$ 602.00**	**$ 91.50**	**$ 640.50**	**$ 152.50**	**$ 1,067.50**
4	**Holiday Hourly Rate**			**$ 493.00**	**$ 493.00**	**$ 584.00**	**$ 584.00**	**$ 527.50**	**$ 527.50**
4.1	Master Electrician	1	Per Hour	**$ 215.00**	**$ 215.00**	**$ 270.00**	**$ 270.00**	**$ 202.50**	**$ 202.50**
4.2	Licensed Journeyman	1	Per Hour	**$ 166.00**	**$ 166.00**	**$ 192.00**	**$ 192.00**	**$ 172.50**	**$ 172.50**
4.3	Helper	1	Per Hour	**$ 112.00**	**$ 112.00**	**$ 122.00**	**$ 122.00**	**$ 152.50**	**$ 152.50**

		Lone Star Electric Fort Worth, TX	Humphrey & Associates, Inc.	TDIndustries, Inc.
5	**Vendor Owned Equipment List**			
5.1	20' Scissor Lift	No bid	No bid	No bid
5.2	30' Scissor Lift	No bid	No bid	No bid
5.3	One Man Lift	No bid	No bid	No bid
5.4	Backhoe	No bid	No bid	No bid
5.5	Bucket Truck	$ 100.00	No bid	No bid
5.6	Trencher	$ 75.00	No bid	No bid

* Hourly rates for vendor owned equipment are not included in price evaluation

** Texas Industrial Infrastructure Services LLC withdrew their bid

*** No bids were received from Jamie Crandall Equipment Corp. and Shirt Fanatics LLC

TARRANT COUNTY

DEPARTMENT OF FACILITIES MANAGEMENT

November 10, 2025

Allan Tucker
Senior Buyer
Tarrant County Purchasing Department
100 East Weatherford, Suite 303
Fort Worth, TX 76196

Subject: Bid F2026021 Annual Contract for Specialized Electrical Services

Re: Approval of Low Bidder

Mr. Tucker,

Tarrant County Facilities Management (TCFM) has completed its evaluation of the bids and supporting documentation submitted for Bid No. F2026021 Annual Contract for Specialized Electrical Services.

After a thorough review, TCFM has determined that all three contractors meet the qualifications and demonstrate the capacity to successfully perform the scope of work outlined in the solicitation.

Based on this evaluation, TCFM recommends awarding the contract to Lone Star Electric, Humphrey & Associates, Inc., TDIndustries, Inc. (TD Industries) as primary vendors.

Tarrant County Facilities Management

Sincerely,

Joshua B. Palmer

Joshua B. Palmer
Tarrant County Facilities Management
200 North Taylor St., Suite 344
Fort Worth, TX 76196

TAKINGS IMPACT ASSESSMENT CHECKLIST

Complete this form for any county action that involves the adoption of a regulation, policy, guideline, court resolution, or order.

Project/Regulation Name: Bid No. F2026021 - Annual Contract for Specialized Electrical Services - Facilities Management - Various Vendors - Hourly Rates

County Department: PURCHASING

Contact Person: Melissa Lee, C.P.M., A.P.P.

Phone Number for Contact Person: (817) 884-3245

Type of TIA Performed: (SHORT TIA) or FULL TIA. Circle one after answering the questions in Sections II and III below.

****

I. Stated Purpose

Attach to this checklist an explanation of the purpose of the regulation, policy, guideline, court resolution or order.

****

Note: The remainder of this Takings Impact Assessment Checklist should be completed in consultation with the Criminal District Attorney's Office.

II. Potential Effect on Private Real Property

1. Does the county action require a physical invasion, occupation or dedication of real property?

   Yes _____ No √

2. Does the county action limit or restrict a real property right, even partially or temporarily?

   Yes _____ No √

If you answered yes to either question, go to Section III. If you answered no to both, STOP HERE and circle SHORT TIA at the top of the form.

****

TARRANT COUNTY
COMMISSIONERS COURT COMMUNICATION

Court Date: December 9, 2025	**Court Order #:**	**Page:** 1 of 5
Department: Purchasing	**Prepared By:** Gwen Peterson, C.P.M., A.P.P.	**Approved By:** Christopher Lax, CPSM, CPSD, CPCP

SUBJECT:

Bid No. F2026022 - Annual Contract for Preventative Maintenance and Repair of Conveyor System - Facilities Management - Various Vendors - Per Unit Price, Hourly Rates, and Markup for Parts

COMMISSIONERS COURT ACTION REQUESTED

It is requested that the Commissioners Court award Bid No. F2026022, Annual Contract for Preventative Maintenance and Repair of Conveyor System, for Facilities Management, to the following vendors at the per unit price, hourly rates, and markup for parts:

Primary	Advanced Intralogistics LLC, a Shoppa's Material Handling Company
Secondary	Roberts Maintenance Engineering

BACKGROUND

Notice of the County's intent to bid was advertised in a local newspaper, as required by State statute, and posted on the Internet, the Arlington Black Chamber of Commerce, the Fort Worth Hispanic Chamber of Commerce, the Fort Worth Metropolitan Black Chamber of Commerce, and the Tarrant County Asian American Chamber of Commerce. Five hundred thirty-five (535) vendors were contacted and requested to participate in this bid process. All documents pertaining to this bid were posted on the Tarrant County website and were downloaded by interested bidders. A pre-bid conference held on October 28, 2025 was attended by one (1) vendor as well as representatives from Purchasing. Two (2) bids and four (4) no-bids were received.

Bids were evaluated by Facilities Management and Purchasing representatives. Award recommendations are to the low bids meeting specifications.

The term of the contract is twelve (12) months, effective December 16, 2025.

Subject to continued funding by the Commissioners Court, this agreement shall automatically renew December 16, 2026 and December 16, 2027, hereafter for two (2) twelve (12) month periods ending on December 15, 2028, unless sooner terminated by either party as provided herein.

This contract is used to provide preventative maintenance and repair of the conveyor system located at the Tarrant County Corrections Center. The conveyor system is utilized to store and retrieve inmate property. Preventative maintenance includes, but is not limited to, checking trunnion for drive linkage engagement; checking wheels and hanger frames for damage; replacing belts; lubricating gear boxes, drive motors, wheels, linkage joints, pins holding hanger frame to drive linkage, and holes containing connector rods between upper and lower hanger frames; cleaning excess lubricant from wheels; clearing area under conveyor of any obstructions; and testing the entire conveyor system.

Therefore, it is the joint recommendation of Facilities Management and Purchasing that Bid No. F2026022, Annual Contract for Preventative Maintenance and Repair of Conveyor System, be awarded to the vendors listed above at the per unit price, hourly rates, and markup for parts.

FISCAL IMPACT

Expenses for the last twelve (12) months were $33,400.00. Funding is available in account 10000-2026 General Fund/3110307000 Corrections Center Building/532011 Building Maintenance.

Attachments

Backup.pdf

Bid No. F2026022 Annual Contract for Preventative Maintenance and Repair of Conveyor System

				Primary Award		*Secondary Award*	
				Advanced Intralogistics LLC, a Shoppa's Material Handling company Fort Worth, TX HUB - No CO-OP - Yes		*Roberts Maintenance Engineering Garland, TX HUB - No CO-OP - Yes*	
				Total Price	**$30,515.00**	*Total Price*	*$43,175.00*
Line #	Description	QTY	UOM	**Unit**	**Extended**	*Unit*	*Extended*
2	Preventative Maintenance Services						
2.1	Conveyor Belt System Preventative Maintenance Visit White Conveyors Brand System (3 Conveyors)Model PD-72, Serial Number 46602-1790 Tarrant County Corrections Center 100 N. Lamar Street Fort Worth, TX 76196	1	Price Per Visit	**$3,188.00**	**$3,188.00**	*$6,000.00*	*$6,000.00*
3	Repair Services – Hourly Labor Rates Read the Technical Specifications included on the 'Attachments' Tab.						
3.1	Trained Repair Person Hourly Rate: Monday - Friday, 8:00 AM to 5:00 PM	90	Per Hour	**$225.00**	**$20,250.00**	*$325.00*	*$29,250.00*
3.2	Trained Repair Person Hourly Rate: Monday-Friday, 5:01 PM to 7:59 AM and Weekends	20	Per Hour	**$337.00**	**$6,740.00**	*$375.00*	*$7,500.00*
3.3	Trained Repair Person Hourly Rate, Vendor Recognized Holidays	1	Per Hour	**$337.00**	**$337.00**	*$425.00*	*$425.00*
4	Materials/Parts – Percentage (%) Markup from Vendor's Cost (20% Maximum)						
4.1	Markup on Parts			**20.0%**		*20.0%*	

Notes:

A no-bid response was received from Complete Supply, Inc., Richmond Equipment, Shirt Fanatics LLC, and TDIndustries, Inc.

TARRANT COUNTY

DEPARTMENT OF FACILITIES MANAGEMENT

November 10, 2025

Gwen Peterson
Senior Buyer
Tarrant County Purchasing Department
100 East Weatherford, Suite 303
Fort Worth, TX 76196

Subject: Bid F2026022 Annual Contract for Preventative Maintenance and Repair of Conveyor System.

Re: Approval of Low Bidder

Ms. Peterson,

Tarrant County Facilities Management (TCFM) has reviewed the bid and supporting documents submitted for Bid F2026022 Annual Contract for Preventative Maintenance and Repair of Conveyor System.

Tarrant County Facilities Management (TCFM) has completed its evaluation of the bids and supporting documentation submitted for Bid No. F2026022. After a thorough review, TCFM has determined that Advanced Intralogistics LLC meets the qualifications and demonstrates the capacity to successfully perform the scope of work outlined in the solicitation.

Based on this evaluation, TCFM recommends awarding the contract to Advanced Intralogistics LLC as the primary vendor, with Roberts Maintenance Engineering designated as the secondary vendor.

Tarrant County Facilities Management

Sincerely,

Joshua B. Palmer

Joshua B. Palmer
Tarrant County Facilities Management
200 North Taylor St., Suite 344
Fort Worth, TX 76196

TAKINGS IMPACT ASSESSMENT CHECKLIST

Complete this form for any county action that involves the adoption of a regulation, policy, guideline, court resolution, or order.

Project/Regulation Name: Bid No. F2026022 – Annual Contract for Preventative Maintenance and Repair of Conveyor System – Facilities Management – Various Vendors – Per Unit Price, Hourly Rates, and Markup for Parts

County Department: PURCHASING

Contact Person: Melissa Lee, C.P.M., A.P.P.

Phone Number for Contact Person: (817) 884-3245

Type of TIA Performed: (SHORT TIA) or FULL TIA. Circle one after answering the questions in Sections II and III below.

****

I. Stated Purpose

Attach to this checklist an explanation of the purpose of the regulation, policy, guideline, court resolution or order.

****

Note: The remainder of this Takings Impact Assessment Checklist should be completed in consultation with the Criminal District Attorney's Office.

II. Potential Effect on Private Real Property

1. Does the county action require a physical invasion, occupation or dedication of real property?

   Yes _____ No ___√___

2. Does the county action limit or restrict a real property right, even partially or temporarily?

   Yes _____ No ___√___

If you answered yes to either question, go to Section III. If you answered no to both, STOP HERE and circle SHORT TIA at the top of the form.

****

TARRANT COUNTY
COMMISSIONERS COURT COMMUNICATION

Court Date: December 9, 2025	**Court Order #:**	**Page:** 1 of 49
Department: Purchasing	**Prepared By:** Wanyu Chen	**Approved By:** Christopher Lax, CPSM, CPSD, CPCP

SUBJECT:

Rescind Court Order #146190 - RFP No. F2025098 - Annual Contract for Grants Management Software and Maintenance - Countywide - StreamLink Software, Inc. d/b/a AmpliFund - Per Contract Terms

COMMISSIONERS COURT ACTION REQUESTED

It is requested that the Commissioners Court rescind Court Order #146190 of proposals for RFP No. F2025098, Annual Contract for Grants Management Software and Maintenance, Countywide, to Euna Solutions, Inc. and award to StreamLink Software, Inc. d/b/a AmpliFund at the per contract terms.

BACKGROUND

On October 14, 2025, through Court Order #146190, the Commissioners Court awarded RFP No. F2025098, Annual Contract for Grants Management Software and Maintenance, Countywide, to Euna Solutions, Inc.

Proposals were evaluated by the Auditor's Office, Budget and Risk Management, Information Technology, and Purchasing representatives. Evaluations were based upon the criteria and processes set forth in the RFP.

After the award was made, it was discovered that Euna Solutions, Inc., the vendor associated with the awarded product, had completed the acquisition of Streamlink Software, Inc. d/b/a AmpliFund and subsequently announced the launch of Euna Grants powered by AmpliFund System. The proposed legacy Euna Grants product, eCivis, will be discontinued after December 31, 2025, and enter sustaining support mode in 2026, with no future enhancements. As a result, the proposed solution will not meet the County’s long-term product support and functionality requirements. Therefore, it is in Tarrant County’s best interest to award the AmpliFund System, the original second-highest scoring solution, which will honor the same price as the original award to eCivis.

The term of the contract is twelve (12) months, effective December 9, 2025.

Subject to continued funding by the Commissioners Court, this agreement shall automatically renew December 9, 2026 and December 9, 2027, hereafter for two (2) twelve (12) month periods ending on December 8, 2028, unless sooner terminated by either party as provided herein.

The purpose of this contract is to streamline the County’s grant management lifecycle process, including tracking, award management, budgeting, financial tracking, reporting, grant research and discovery, RFP and subrecipient management, and compliance management.

Therefore, it is the joint recommendation of the Auditor's Office, Budget and Risk Management, Information Technology, and Purchasing that RFP No. F2025098, Annual Contract for Grants Management Software and Maintenance, be awarded to StreamLink Software, Inc. d/b/a AmpliFund at the per contract terms.

The contract is attached for approval and signature. The District Attorney’s Office reviewed this contract as to form.

FISCAL IMPACT

This is a new contract with no expenses for the last twelve (12) months.

Funding for Year 1 in the amount of $80,000.00 is available in account 45400-2026 Capital Replacement/1810220000 Project Management Office/540000 Capital Overlay. Annual license fees in the amount of $72,100.00 for Year 2 and $74,263.00 for Year 3 will be requested in future budgets.

PASSED AND APPROVED on December 9, 2025.

COUNTY OF TARRANT
STATE OF TEXAS

By: Separate Electronic Signature Page
Tim O'Hare
County Judge

APPROVED AS TO FORM:

_____
District Attorney's Office*

*By law, the District Attorney's Office may only approve contracts for its clients. We reviewed this document as to form from our client's legal perspective. Other parties may not rely on this approval. Instead, those parties should seek contract review from independent counsel.

Attachments

Backup.pdf

RFP No. F2025098 Annual Contract for Grants Management Software and Maintenance

Best and Final Offer Scores

			Award
		Euna Solutions, Inc. Chicago, IL HUB - No	**StreamLink Software, Inc. dba AmpliFund Cleveland, OH HUB - No CO-OP - Yes**
Evaluation Criteria	Max Points	Score	Score
Qualifications and Experience	100	72.14	**61.79**
Response to Requirements	300	202.83	**214.17**
Approach and Management	100	63.14	**60.86**
References	150	150.00	**145.00**
Price	350	350.00	**326.41**
Total Score	1000	838.11	**808.23**

Note: No-bids received from 3-C TECHNOLOGY, LLC, CMIT Solutions of Best Southwest Dallas County, Communication Concepts dba Communicon Inc., Hypertec USA Inc., dba Hypertec Direct, SecurityScorecard, Inc., Texas Pipeline Services, and Trafera, LLC.

Advanced Business Software LLC, Dulles Technology Partners, Inc., and Occams Group LLC were not considered, as they lacked the functionality to research all federal, state, and local grant opportunities, as required.
Projectized Solutions LLC and Provisio Partners Illinois LTD were not considered because they leverage third-party platforms and would not serve as the primary solution providers, as required.

RFP No. F2025098 Annual Contract for Grants Management Software and Maintenance

Post-Demonstration Scores

		Euna Solutions, Inc. Chicago, IL HUB - No	StreamLink Software, Inc. dba AmpliFund Cleveland, OH HUB - No
Evaluation Criteria	Max Points	Score	Score
Qualifications and Experience	100	72.14	61.79
Response to Requirements	300	202.83	214.17
Approach and Management	100	63.14	60.86
References	150	150.00	145.00
Price	350	350.00	285.54
Total Score	1000	838.11	767.36

		Ignyte Group, Inc. Washington, DC HUB - No	Sysintellects LLC Plano, TX HUB - No
Evaluation Criteria	Max Points	Score	Score
Qualifications and Experience	100	69.29	54.64
Response to Requirements	300	173.30	147.00
Approach and Management	100	63.43	60.29
References	150	95.00	42.50
Price	350	133.84	110.17
Total Score	1000	534.86	414.60

Note: No-bids received from 3-C TECHNOLOGY, LLC, CMIT Solutions of Best Southwest Dallas County, Communication Concepts dba Communicon Inc., Hypertec USA Inc., dba Hypertec Direct, SecurityScorecard, Inc., Texas Pipeline Services, and Trafera, LLC.

Advanced Business Software LLC, Dulles Technology Partners, Inc., and Occams Group LLC were not considered, as they lacked the functionality to research all federal, state, and local grant opportunities, as required.
Projectized Solutions LLC and Provisio Partners Illinois LTD were not considered because they leverage third-party platforms and would not serve as the primary solution providers, as required.

RFP No. F2025098 Annual Contract for Grants Management Software and Maintenance

Initial Scores

		Euna Solutions, Inc. Chicago, IL HUB - No	StreamLink Software, Inc. dba AmpliFund Cleveland, OH HUB - No
Evaluation Criteria	Max Points	Score	Score
Qualifications and Experience	100	72.14	61.79
Response to Requirements	300	192.63	205.80
Approach and Management	100	63.14	60.86
Total Score	500	327.91	328.45

		Ignyte Group, Inc. Washington, DC HUB - No	Sysintellects LLC Plano, TX HUB - No
Evaluation Criteria	Max Points	Score	Score
Qualifications and Experience	100	69.29	54.64
Response to Requirements	300	195.29	206.80
Approach and Management	100	63.43	60.29
Total Score	500	328.01	321.73

Note: No-bids received from 3-C TECHNOLOGY, LLC, CMIT Solutions of Best Southwest Dallas County, Communication Concepts dba Communicon Inc., Hypertec USA Inc., dba Hypertec Direct, SecurityScorecard, Inc., Texas Pipeline Services, and Trafera, LLC.

Advanced Business Software LLC, Dulles Technology Partners, Inc., and Occams Group LLC were not considered, as they lacked the functionality to research all federal, state, and local grant opportunities, as required.
Projectized Solutions LLC and Provisio Partners Illinois LTD were not considered because they leverage third-party platforms and would not serve as the primary solution providers, as required.

Kimberly M. Buchanan, CPA
Tarrant County Auditor

Linda R. Castillo
First Assistant County Auditor

Office of the Tarrant County Auditor
100 E. Weatherford, Room 506
Fort Worth, Texas 76196-0103

Phone (817) 884-1205
Fax (817) 884-1104

11/17/2025

Wanyu Chen, Senior Buyer
Tarrant County
100 E. Weatherford Street, Suite 303
Fort Worth, Texas 76196

Re: F2025098 - Annual Contract for Grants Management Software and Maintenance

Dear Ms. Chen:

After evaluation of the information provided in the responses, Tarrant County Auditor's Office recommends award of RFP F2025098 to StreamLink Software, Inc. dba Amplifund.

Sincerely,

Kimberly M. Buchanan

Kimberly M. Buchanan, CPA
Tarrant County Auditor

TARRANT COUNTY
BUDGET AND RISK MANAGEMENT

HELEN H. GIESE
DIRECTOR

11/20/2025

Wanyu Chen
Senior Buyer
100 E. Weatherford Street, Suite 303
Fort Worth, Texas 76196

Re: F2025098 – Annual Contract for Grants Management Software and Maintenance

Dear Ms. Chen:

After evaluation of the information provided in the responses, Tarrant County Information Technology Department recommends award of RFP F2025098 to Euna Solutions, Inc using the AmpliFund solution.

Sincerely,

Helen H. Giese
Director of Budget and Risk Management

INFORMATION TECHNOLOGY
Empowering Innovation
Driving Excellence

Chief Information & Artificial Intelligence Officer
André Mendes

Chief Administrative Officer
Cecilia Webb

Chief Information Security Officer
Russell Scott

Deputy CIO Cloud, Infrastructure & Operations
Anthony Jackson

Deputy CIO Enterprise Applications
Michael Webb

Assistant CIO Governance
Adepeju Ajunwon

Assistant CIO Organizational Change Management & Support Services
Carolyn J. Bogan

Our vision is to be the best IT organization in state and local government within the United States.

200 Taylor Street
Fort Worth, TX 76196

Phone: 817.884.3888
Fax: 817.212.3060

www.tarrantcountytx.gov

11/19/2025

Wanyu Chen
Senior Buyer
100 E. Weatherford Street, Suite 303
Fort Worth, Texas 76196

Re: F2025098 – Annual Contract for Grants Management Software and Maintenance

Dear Ms. Chen:

After evaluation of the information provided in the responses, Tarrant County Information Technology Department recommends award of RFP F2025098 to Euna Solutions, Inc using the AmpliFund solution.

Very sincerely,

Michael Webb (11/19/2025 10:55:21 CST)

Michael Webb
Deputy CIO Enterprise Applications

EUNA®
solutions

November 4, 2025

To Whom It May Concern:

Earlier this year, Euna Solutions, Inc. completed the acquisition of Streamlink Software, owners of the AmpliFund Grants system. Shortly after the acquisition, Euna announced the launch of Euna Grants powered by AmpliFund. This new, combined product will provide enhanced features to the current Euna products and will receive all future product investment.

Due to the launch of Euna Grants by AmpliFund and the go forward investment strategy, the legacy Euna grants product will no longer be available for sale after Dec. 31, 2025. Additionally, the legacy Euna grants product will most likely enter our sustaining support mode in the second half of 2026. This means any work on the product will be limited to support and security fixes only, no further feature investment is planned for the legacy Euna grants product.

Sincerely,

Myk Konrad

Chief Product Officer

844.266.3862
legal@eunasolutions.com
www.eunasolutions.com

USA
1155 Perimeter Center W, Ste 500
Sandy Springs, GA 30338

Euna Solutions, Inc.

ORDER OVERVIEW

Order #: TarrantCo072425
Expiry Date: 12/19/2025

Rep Name: Shaq Gordon
Rep Email: shaq.gordon@eunasolutions.com

Tarrant County
Fort Worth, TX, 76196
United States

Subscription Term (# Years): 1 + 2 Optional 1 Year Renewals

Annual Price Increase: 3%

Currency: **USD**

ORDER DETAILS AND PRICING

Year 1 - $80,000.00

Year 2 - $72,100.00

Year 3 - $74,263.00

Solution	Recurring Services	Units	Avg Unit Price	Total Price
Grants	Full Grant Lifecycle – Grant Seeking & Grant Making – Software - Maintenance & Support – Unlimited Users	1		$70,000.00
		Recurring Annual Fee(s) Sub-Total		**$70,000.00**
Solution	**One-Time Services**	**Units**	**Avg Unit Price**	**Total Price**
Grants	Full Grant Lifecycle – Grant Seeking & Grant Making – Implementation Grant Seeking Data Financial Integration & Open/Active Grant Migration	1		$10,000.00
		Non-Recurring Fee(s) Sub-Total		**$10,000.00**
		TOTAL YEAR 1 PRICE		**$80,000.00**

PAYMENT INFORMATION AND CONTRACT TERMS

Accounts Payable Contact:

Name: Tarrant County Auditors Office

Email: SAP-INVOICES@tarrantcountytx.gov

COUNTY OF TARRANT
STATE OF TEXAS

Separate Electronic Signature Page

Name: Tim O'Hare
Title: County Judge

Acceptance Date:_____

EUNA SOLUTIONS, INC.

Signature: Andrew C Stolz
Andrew Stolz
Name: _____
Vice President, Sales
Title: _____

Terms and Conditions

Unless otherwise stipulated in Order Notes and Terms of Payment, Tarrant County hereby agrees to order the products and/or services outlined above at the prices indicated, and acknowledges it has read, understands and agrees to be bound by the terms and conditions detailed in below SaaS and Services Agreement.

All remittance advice and invoice inquiries can be directed to billing@eunasolutions.com. Please feel free to contact us if you have any questions.

Start Date will reflect a mutually agreed upon date between Tarrant County & Euna Solutions within 30 calendar days of the Acceptance Date.

Thank you for your business.

Order Notes and Terms of Payment

Order Notes:

- Annual subscription begins on acceptance date - Upon acceptance, Tarrant County will have full access to the Software, minus any configuration or integrations. Tarrant County will also have access to research grants, and the ability to navigate through the software.
- Applicable taxes extra

Terms of Payment:

Software

- Due 100% upon Start Date of Order Form (Net 90) and annually in advance for future years

Services

- Services will be invoiced per the Milestone Payment Table below:

Milestone*	Deliverables**	Estimated Delivery	Fee
Project Kickoff Meeting	Pre Kickoff Presentation Document, Master Project Timeline, All data call forms, Project Kickoff Presentation Document	No more than 30days from Start Date	$2,500
Grantee Data Migration Completion	Current and active grant award data from the completed Data Migration Worksheet loaded into Euna Solutions	30 days from Project Kickoff Meeting	$2,500
Grantor Training Completion	• Training Manuals, Virtual User Training Communicate ongoing support details	60 days from Project Kickoff Meeting	$2,500
Go - Live	Final Readiness Assessment, Go Live Success and Support Meeting	150 days from Project Kickoff Meeting	$2,500
		Total Cost	$10,000

*Euna will submit an invoice only after County has provided written acceptance of milestone completion.

** Refer to Section 6 TASKS TO BE ACCOMPLISHED/FUNCTIONS TO BE PERFORMED.

Schedule D
Statement of Work
("Tarrant County")

Euna Solutions, Inc. acquired the company formerly known as StreamLink Software Inc. dba AmpliFund. Amplifund personnel shall implement the Amplifund System, and Euna Solutions, Inc. shall be responsible for ensuring that Amplifund personnel provide ongoing support and maintenance for the Amplifund System.

AmpliFund's current understanding of the project scope as communicated by Tarrant County ("**County**") is documented below. The scope and timeline will be further refined during the implementation process, as necessary. In the event the Parties mutually agree that this Statement of Work ("**SOW**") should be modified, the Parties shall prepare a written amendment to the Statement of Work, per the Change Order Request section of this SOW, for execution by the Parties.

Project Scope

Implementation Services

The implementation fee includes up to 200 professional services hours in support of the implementation ("**Implementation Hours**") of the **AmpliFund Lifecycle** product (the "**AmpliFund System**") for County to manage up to $175 million in Annual Grant Revenue across 150 grant programs. The AmpliFund System includes unlimited (i) internal and external users and (ii) document storage. Implementation Hours include all customer facing and internal AmpliFund work associated with the County's implementation. Professional services hours by implementation phase or function are itemized in the following table:

Implementation Phase or Function	Quantity
Service Hours	200

Hours may shift from one implementation phase or function to another at the discretion of AmpliFund to support fulfillment of the SOW. Unless explicitly stated otherwise in this SOW, all implementation services will be delivered remotely.

The AmpliFund Implementation Methodology moves through the following phases: Kick-off, Discovery, Design, Configuration, Testing, Training, and Deployment. This methodology is reflected through services offered to the County. Upon execution of the Agreement, the AmpliFund System will be provisioned in **AmpliFund's Microsoft Azure Multi-Tenant Commercial Cloud** and available for County's use. Implementation Hours will assist County in further defining County use cases and configuring the AmpliFund System, within its configuration parameters, to best satisfy those use cases. Implementation phases include:

Kick-Off

- The AmpliFund Implementation Team will conduct a kick-off meeting inclusive of expectation setting, early requirements gathering, confirmation of customer's related business goals and objectives, and identification of customer and AmpliFund teams, roles, and responsibilities.
- The Kick-Off will include at a minimum the following resources from the County:
    - Executive sponsor
    - Implementation project lead
    - Key functional stakeholders

Discovery and Design

- The AmpliFund Implementation Team will conduct requirements gathering, or Discovery, and Design review sessions related to the County and programs in each relevant stage of the grant lifecycle:

    - Grant Seeker: ☒pre-award, ☒awarding, ☒post-award, ☒reporting, and ☒subrecipient management
    - Grant Maker: ☒pre-award, ☒awarding, ☒post-award, ☒reporting, and ☒recipient management

- Discovery and Design review sessions will include the following types of resources from the County, as applicable to the subject matter of the session:
    - Implementation project lead
    - Program / Grants Subject Matter Experts (SMEs)
    - Legal, Contracting, and/or Procurement Staff
    - Financial Staff
    - Technology SMEs
- AmpliFund expects resources to be segmented against session topics. For example, Grants SMEs are involved with grants process mapping sessions while financial resources are involved with financial mapping and cash flow discovery sessions.
- Design review sessions will take place in an iterative process throughout the discovery and design stages.
- As part of this phase, AmpliFund will document:
    - All relevant grant business processes
    - County's related business goals and objectives
    - Implementation Project Plan
- Prior to conclusion of this phase and as a prerequisite to Configuration and Testing, County will be required to sign-off on:
    - All relevant grant business processes
    - County's related business goals and objectives
    - Implementation Project Plan

Configuration and Testing

- **Configuration**
    - AmpliFund Implementation team will configure the AmpliFund System to support the grant business processes and reporting requirements as agreed in the Discovery and Design phases.
- **Testing**
    - AmpliFund will test all business processes and configured AmpliFund System options and review with County prior to Training and Deployment.
    - Prior to conclusion of this phase and as a prerequisite to Training and Deployment, County will be required to sign-off on AmpliFund System configuration.

Training

- AmpliFund will design and conduct user training and provide relevant training assets for AmpliFund System usage in the form of (i) user guides, (ii) pre-recorded, standard trainings available on the AmpliFund Support Portal, and (iii) recordings of live trainings delivered to County.
- AmpliFund may segment training to relevant user groups, such as:
    - County Implementation Team
    - County Program Managers
    - County Financial users
    - County Technical users / System Admins

    - Reviewers (external)
    - Applicants (external)
    - Recipients (external)
- As part of this phase, AmpliFund will document the Training Plan.
- Prior to commencement of training, Tarrant County will be required to sign-off on the documented Training Plan.

Deployment

- An approved set of configurations in AmpliFund will be released to the customer for use in the already provisioned production environment in accordance with the timeline set forth in the Implementation Project Plan.

Implementation Closeout

AmpliFund will document agreed upon implementation closeout activities within the Implementation Project Plan. Formal implementation closeout will require sign-off by County that all tasks are complete.

Project Schedule

A refined Implementation Project Plan will be an AmpliFund deliverable from the Discovery phase. Unless the Implementation Project Plan explicitly establishes a timeline to the contrary, all Implementation Hours will expire two hundred and forty (240) calendar days from execution of the Agreement. Any change to the Implementation Project Plan that would impact the then-current completion date of the implementation requires a written Change Order.

Technical Services

In addition to the aforementioned services, AmpliFund will provide the following marked ☒ services:

☒ Single Sign On (SSO)

If checked, County will receive a license to utilize AmpliFund's SSO capability. AmpliFund supports SAML, OAUTH, and WS-Federation services to integrate with external authentication providers and will integrate with the customer's Active Directory implementation out-of-the-box. User roles and sign-on details will be managed by the County, including password requirements and security.

☒ Grant Seeker Expense Automated Integration with existing Financial System

If checked, see Exhibit A-1. If not checked, AmpliFund will support the movement of data between systems using import/export templates.

☒ Grant Maker Payment / Accounts Payable (AP) Integration with existing Financial System

If checked, see Exhibit A-2. If not checked, AmpliFund will support the movement of data between systems using import/export templates.

☒ Data Migration

If checked, see Exhibit A-3. If not checked, AmpliFund will not migrate any existing historical data.

☒ Application Programming Interface (API) Access

If checked, County will receive a license to access to AmpliFund's API. API documentation will be made available to the County to be utilized by the County to build the integration. Technical assistance requested by County in regard to initial configuration will be counted as Implementation Hours.

Further ongoing support is detailed in **Exhibit B – Support**.

Change Order Requests

Any modifications to this SOW, including changes to the then-current completion date of the implementation identified in the Implementation Project Plan, require a written amendment ("**Change Order**") executed by the Parties. In the event that, in AmpliFund's judgement, any such modification would necessitate an increase in the total cost of Implementation Hours, AmpliFund will prepare a written cost proposal as part of the Change Order for County's approval or rejection. No services that would increase the total cost of Implementation Hours will be commenced without a fully executed Change Order.

Customer Obligations

Successful implementation of AmpliFund solution within the timeline established by the Implementation Project Plan requires the County's active participation, collaboration, and coordination. County will:

- Provide a single point of contact to AmpliFund for coordinating the scheduling of all implementation activities with County.
- Provide timely responses to scheduling requests and at a minimum within two (2) business days of receipt of the request. Implementation hours may be charged to the customer for the time required by AmpliFund to illicit a response.
- Ensure availability of necessary County personnel for scheduled implementation activities.
- Provide a minimum of two (2) full business days' notice to AmpliFund of County's need to cancel and/or reschedule a scheduled implementation activity. Implementation hours may be charged to the customer for scheduled unused meeting time without proper notice.
- Deliver to AmpliFund and/or input into the AmpliFund System all required information or data in accordance with deadlines set forth in the Implementation Project Plan.

AmpliFund Obligations

In addition to the services set forth in this SOW, AmpliFund will:

- Be responsible for calculating and reporting expended and remaining hours to the County on a monthly basis.
- Provide timely responses to client communications within two (2) business days of receipt of the request.
- Provide a minimum of two (2) full business days' notice to County of AmpliFund's need to reschedule a scheduled implementation activity.

Exhibit A-1

Grant Seeker Expense Integration – Statement of Work

AmpliFund will configure an interface to run on a pre-defined schedule, to occur at least once per day, that will integrate expense transactions from County's financial system of record, SAP, into AmpliFund. The integration will be limited to AmpliFund Standard Data Elements associated with Expense records. The connector will be configured using a third-party iPaaS tool, Workato, following the conclusion of the Discovery, Configuration, & Testing phases of AmpliFund's implementation plan.

The integration will be configured in accordance with the configuration and mapping rules defined during implementation, leveraging the County's identifiers and chart of accounts elements as the key elements for mapping each relevant expense transaction. Additional details will be captured as part of the requirements gathering phase for this project, including connectivity details, filters and parameters, and additional mapping requirements as needed.

County Obligations:

1. County will provide comprehensive responses to the Requirements Gathering Workbook provided to County as part of implementation outlined in Exhibit A.
2. County will provide any existing process documentation (e.g., workflow diagrams, SOPs) related to County's grant financial processes.
3. County will provide a consistent and standard method for providing AmpliFund access to the desired expense transactions to integrate.
4. County will provide examples of Expense Reports with detail from County's financial system.
5. The current structure of the County's chart of accounts will include segments (i.e., fields) that will allow the AmpliFund System to identify the grant in which to associate a given transaction.
6. County will make available via either (i) API endpoint(s) or (ii) a regularly delivered and consistently formatted flat file (in .csv or comparable format) the transactions and associated data required for mapping via the interface.
    a. If integrating via API, County will provide documentation of the authentication protocol and integration endpoint(s).
7. The current structure of the County's chart of accounts will include segment(s) that can be used to identify the specific Budget Line Item to which a transaction is to be posted.
8. The current structure of the County's chart of accounts will include segment(s) that can be used to identify whether a transaction is Grant-Funded, Cash-Match, or In-Kind Match.
9. If indirect costs are to be captured in the financial system, the current structure of the County's chart of accounts will include segment(s) that can be used to identify those indirect costs.
10. County will provide requisite test data sets.
11. County will make available personnel resource(s), such as a financial systems analyst, a third-party financial system representative, or comparable role, that can provide the necessary information to support the discovery and configuration phase of the implementation plan, including, but not limited to:
    a. Strong understanding of the County's current chart of accounts
    b. Ability to produce sample data sets, exports, and other relevant material necessary for evaluation
    c. Knowledge of County's financial system capabilities related to the API or export tools required to support the integration (i.e., interoperability functionality).

EXHIBIT A-2

Grant Maker Payment / Accounts Payable (AP) Integration – Statement of Work

Integration will be identified from the kick-off as an independent workstream that runs simultaneously to the standard Grant Maker implementation and program configuration expectations. This integration has direct inputs to AmpliFund use and recipient management within the broader use of AmpliFund and therefore must be addressed at the onset of the Grant Maker implementation. This workstream will follow a similar methodology as described in Exhibit A with thorough discovery, design, configuration, and testing phases prior to deployment.

The integration will be configured in accordance with the configuration and mapping rules defined during implementation, leveraging the County's identifiers as the key elements for mapping each relevant transaction. Additional details will be captured as part of the requirements gathering phase for this project, including connectivity details, filters and parameters, and additional mapping requirements as needed.

The integration will consist of at most two integration points: (i) an outbound file inclusive of all payments to be processed for each batch, and (ii) an inbound file to update records in AmpliFund. The outbound file will be generated by AmpliFund in accordance with the County's system requirements, and the inbound file will be processed by AmpliFund and applied to the associated payment records as defined by the integration mapping requirements.

Any changes to the agreed-upon scope, requirements, or other aspects of the integration that occur after the initial go-live must follow the defined Change Order process.

County Obligations:

1. The County's system can accept files (fixed-width, csv, delimited) or API posts
2. All necessary County systems will be available and operational at the agreed and specified time of outbound file generation and processing will occur at the specified time on a daily basis.
3. County will agree on a mutually established, standardized set of mapping rules that will apply to all payments.
4. County will limit record ID's used to synchronize data between the systems to existing GUID's, ID's, Serials, or custom-fields created and managed by the County.
5. County will provide access to County's technical resources as needed, and will adhere to mutually agreed communication protocols and schedules.
6. County will provide a test environments and valid test data to support development and UAT.
7. County's vendor records will already be created and available in the required format, and this information can be stored and transmitted from AmpliFund but will not be created as part of the integration.

Exhibit A-3

Data Migration - Statement of Work

Data Migration will be identified from the kick-off as an independent workstream that runs simultaneously to the standard AmpliFund Lifecycle implementation and program configuration expectations. This data migration workstream has direct inputs to AmpliFund a holistic viewpoint from the broader grant portfolio perspective and expectations for active utilization of the system and therefore must be addressed as part of the implementation. This workstream will follow a similar methodology as described in Exhibit A with thorough discovery, design, configuration, and testing phases prior to deployment.

The AmpliFund Implementation team works with County resources to understand applicable data points for migration into AmpliFund. The data migration strategy relies on a flat file transfer process that includes extracting data from a legacy database, excel spreadsheets, and pdf/word grant agreements for data mapping gap analysis, gap mitigation plan, data extraction, transformation, and loading into AmpliFund.

Available import templates that include all objects, fields, and field types that are part of standard data migration are available at the following URL: https://amplifund.zendesk.com/hc/en-us/categories/201641706-Import-Templates

Project Specific Information

AmpliFund anticipates working with the County to identify specific data sets and details that will include historical information across the county. This includes grant detail information to allow for better comprehensive reporting. Grant data may include, but is not limited to:

- Grant Name
- Grant Manager
- Grant Manager email
- Funding information
- Award Amount
- Award Start and End Dates
- Award details including
    - Performance plans and submitted metrics
    - Budgets, expenses, and payment requests

Note: documents are not included in this data migration project but can be uploaded at any time by AmpliFund users.

Specific data points, and impact, will be identified throughout the implementation. Data migration services mirror the implementation phases and are incorporated into the discovery and design phases. Included within this process is a systems inventory to identify source material, data mapping analysis, and a mapping plan to define the end points that data will reside in within AmpliFund, as well as a testing process to ensure the County-provided content follows the agreed upon configuration requirements. County staff will need to share legacy data from existing system(s) and transform the data into the appropriate format. AmpliFund can support this process as needed but would expect the county to do most of the work needed to transform the data into the appropriate format. The County will help define the appropriate mapping of the data into AmpliFund. AmpliFund will test prior to loading. Through the testing process, the AmpliFund Implementation team will provide test results and recommendations as needed prior to migration into production.

If the County would like AmpliFund to provide additional support to take ownership of cleaning up County data and/or populating the data migration templates, AmpliFund will need to estimate additional service hours as an outcome of the Discovery and Design phase of implementation. Additional costs may be required after reviewing the data migration project in more detail.

In addition, County users can configure the system and data entry can be done through the intuitive user interface and does not require any level of programming.

Assumptions:

- All extraction, transformation, mapping, and other requirements are complete and signed off by agreed upon date as outlined in the Implementation Project Plan.
- File types for system upload are limited to: Word, Excel, Power Point, PDF, Text, Tiff, PNG, JPEG, CSV or BMP
- Standard Data Migration templates will be the primary tool used to migrate any historical grant data into AmpliFund
- File types for data migration import are limited to: Excel or CSV
- All files provided have an available key field(s) to identify the associated recipient/award/invoice/expense etc. object.
- AmpliFund will create a standard “AmpliFund User” in all required accounts for the data entry.

EXHIBIT B

Support

All capitalized terms that are used but not defined in this Exhibit will have the meanings ascribed to them in the body of the Agreement.

1. Support. AmpliFund will provide technical support and customer service ("Support") to County on an ongoing basis during the Term of the Agreement.

    (i) Through AmpliFund's online support portal, County will have access to the most up-to-date support documentation, user guides, videos, release notes, and import templates, as well as regularly scheduled, live virtual training sessions on core functionality.

    (ii) County may request additional Support by contacting AmpliFund at **216-377-5500,** via email at **support@amplifund.zendesk.com** or through the online chat functionality available on the Platform. Telephonic and online chat support are available during normal business hours, defined as 8:00am – 8:00pm ET, Monday through Friday, except for national holidays in the United States. County may submit support tickets, feature requests and bug reports through the Platform at any time.

2. Scheduled Maintenance Downtime. AmpliFund may perform schedule maintenance Monday through Friday, between the hours of 10 PM – 11PM ET. In the event maintenance is required outside these established windows, AmpliFund will make reasonable efforts to notify County in advance.

3. Uptime. AmpliFund guarantees a 99.9% up time of the Platform, exclusive of scheduled maintenance periods. Status of the Platform may be accessed at https://status.amplifund.com/.

SAAS AND SERVICES AGREEMENT

This SAAS and Services Agreement, including all documents referenced and incorporated below and the Order Form which by this reference is incorporated herein (collectively, this "**Agreement**"), is a binding agreement between Euna Solutions, Inc. (referred to as "**Licensor**" or "**EUNA**," as part of the EUNA brand) and the entity identified on the Order Form as the Tarrant County ("**COUNTY**"). EUNA and COUNTY are sometimes individually referred to as a "**Party**" and collectively referred to as the "**Parties**." The Parties agree as follows:

LICENSOR PROVIDES THE SAAS OFFERING, PROFESSIONAL SERVICES, SOFTWARE AND DOCUMENTATION SOLELY ON THE TERMS AND CONDITIONS SET FORTH IN THIS AGREEMENT AND ON THE CONDITION THAT COUNTY ACCEPTS AND FULLY COMPLIES WITH THEM. BY EXECUTION OF THIS AGREEMENT BY AUTHORIZED REPRESENTATIVES OF THE PARTIES. AFTER REVIEWING THESE TERMS AUTHORIZED REPRESENTATIVE OF THE COUNTY (A) ACCEPT THIS AGREEMENT AND AGREE THAT COUNTY IS LEGALLY BOUND BY ITS TERMS AND CONDITIONS; AND (B) REPRESENT AND WARRANT THAT: (I) AUTHORIZED REPRESENTATIVE OF THE COUNTY OF LEGAL AGE TO ENTER INTO A BINDING AGREEMENT; AND (II) IF COUNTY IS A CORPORATION, GOVERNMENTAL ORGANIZATION, OR OTHER LEGAL ENTITY, AUTHORIZED REPRESENTATIVE OF THE COUNTY HAVE THE RIGHT, POWER, AND AUTHORITY TO ENTER INTO THIS AGREEMENT ON BEHALF OF COUNTY AND BIND COUNTY TO ITS TERMS. IF COUNTY DOES NOT AGREE TO THE TERMS AND CONDITIONS OF THIS AGREEMENT, LICENSOR WILL NOT AND DOES NOT LICENSE OR PROVIDE THE SAAS OFFERING, PROFESSIONAL SERVICES, SOFTWARE OR OTHER DELIVERABLE TO COUNTY AND AUTHORIZED REPRESENTATIVE OF THE COUNTY MUST NOT DOWNLOAD, USE OR ACCESS THE SAAS OFFERING, SOFTWARE OR DOCUMENTATION OR OTHERWISE RECEIVE THE PROFESSIONAL SERVICES.

NOTWITHSTANDING ANYTHING TO THE CONTRARY IN THIS AGREEMENT OR AUTHORIZED REPRESENTATIVE OF THE COUNTY'S OR COUNTY'S ACCEPTANCE OF THE TERMS AND CONDITIONS OF THIS AGREEMENT, NO LICENSE IS GRANTED (WHETHER EXPRESSLY, BY IMPLICATION, OR OTHERWISE) UNDER THIS AGREEMENT WITHOUT AN APPLICABLE ORDER FORM AND PAYMENT OF ALL REQUIRED FEES, COSTS AND AMOUNTS. THIS AGREEMENT EXPRESSLY EXCLUDES ANY RIGHT CONCERNING ANY SAAS OFFERING, PROFESSIONAL SERVICES, SOFTWARE OR DOCUMENTATION THAT COUNTY DID NOT ACQUIRE LAWFULLY OR THAT IS NOT A LEGITIMATE, AUTHORIZED COPY OF LICENSOR'S SAAS OFFERING, SOFTWARE OR DOCUMENTATION.

1. Definitions.

a. "**Aggregated Statistics**" means data and information related to COUNTY's use of the SAAS Offering that is used by EUNA in an aggregate and anonymized manner, including to compile statistical and performance information related to the provision and operation of the SAAS Offering.

b. "**Authorized User**" means COUNTY's employees, consultants, contractors, and agents (i) who are authorized by COUNTY to access and use the SAAS Offering under the rights granted to COUNTY

pursuant to this Agreement and the applicable Order Form, and (ii) for whom access to the SAAS Offering has been purchased hereunder.

c. "**Confidential Information**" means any information relating to a Disclosing Party (as defined in Section 9), its business, technology, suppliers, licensors, resellers, distributors, COUNTYs, and third parties to whom the Disclosing Party has an obligation of confidentiality, whether in tangible or intangible form, which is either marked or designated as "confidential" or "proprietary," or disclosed under circumstances indicating its confidential or proprietary nature, or otherwise would be known to be confidential or proprietary by a reasonable person.

d. "**COUNTY Data**" means, other than Aggregated Statistics, information, data, and other content, in any form or medium, that is submitted, posted, or otherwise transmitted by or on behalf of COUNTY or an Authorized User through the SAAS Offering or Professional Services, as applicable.

e. "**Deliverable**" means all documents, work product and other materials that are delivered to COUNTY under this Agreement or prepared by or on behalf of the EUNA in the course of performing the Professional Services or providing the SAAS Offering, including any items identified as such in the applicable Order Form.

f. "**Documentation**" means the applicable training, informational or support videos and documentation relating to (i) the use of and access to the SAAS Offering and (ii) any error corrections, bug fixes, enhancements, improvements, new releases, maintenance releases and updates thereto, provided by EUNA to COUNTY in any format.

g. "**Fees**" means the fees set forth in the applicable Order Form.

h. "**Intellectual Property Rights**" (i) all United States and foreign patents, patent applications, and certificates of invention, and all continuations, continuations in part, extensions, renewals, divisions, re-issues and re-examinations relating thereto; (ii) all moral rights and copyrights in any work of authorship or other work recognized by applicable Law, including all copyright registrations issued by the United States Register of Copyrights and applications therefor, together with any renewal or extension thereof, or by similar authority in any other jurisdiction, and all rights deriving therefrom; (iii) all, whether registered or unregistered, trademarks, service marks, domain names, trade names and trade dress, and all goodwill relating thereto; (iv) all rights in all trade secrets, know-how, and confidential information; and (v) other intellectual property rights protectible under any Laws or international conventions throughout the world, and in each case including the right to apply for registrations, certificates, or renewals with respect thereto and the right to prosecute, enforce, obtain damages relating to, settle or release any past, present, or future infringement or misappropriation thereof.

i. "**Law**" means all applicable laws (including those arising under common law), statutes, codes, rules, regulations, reporting or licensing requirements, ordinances and other pronouncements having the effect of law in the United States, any foreign country or any domestic or foreign state, county, city or other political subdivision, including those promulgated, interpreted or enforced by any governmental or regulatory authority.

j. "**Order Form**" means the order form between the Parties that incorporates this Agreement.

k. "**Public Facing Software**" means a portion of the Software made available by the COUNTY to members of the general public.

l. "**SAAS IP**" means the SAAS Offering and the Documentation. For the avoidance of doubt, SAAS IP includes proprietary data structures, database schemas, metadata, Aggregated Statistics and any information, data, or other content derived from EUNA's monitoring of COUNTY's access to or use of the SAAS IP but does not include COUNTY Data.

m. "**SAAS Offering**" means the software-as-a-service offering, including any integrated platform offering, as set out in the applicable Order Form.

n. "**Professional Services**" means the services set out in the applicable Order Form and any associated statement of work attached or referenced in the Order Form ("Statement of Work"), if applicable.

o. "**Term**" has the meaning set forth in Section 10 a.

p. "**Third-Party Products**" means any third-party products described in the applicable Order Form provided with or incorporated into the SAAS Offering.

2. Professional Services. Subject to and conditioned on COUNTY's payment of Fees and compliance with all other terms and conditions of this Agreement, EUNA shall provide to COUNTY the Professional Services in accordance with the applicable Order Form and Statement of Work.

3. Software Subscription.

a. Provision of Access. Subject to and conditioned on COUNTY's payment of Fees and compliance with all other terms and conditions of this Agreement, EUNA hereby grants COUNTY a non- exclusive, non-sublicensable, non-transferable (except in compliance with Section 22) right to access and use the SAAS Offering during the Term, solely for use by Authorized Users in accordance with the terms and conditions herein. Such use is limited to COUNTY's internal use. EUNA shall provide to COUNTY the necessary information to allow COUNTY to access the SAAS Offering. COUNTY will have an unlimited number of Authorized Users to use within the SAAS Offering.

b. Public Facing Software. Notwithstanding the definition of Authorized Users, COUNTY is permitted to provide access to its constituents that are solely utilizing public facing functionalities of the SAAS Offering that do not otherwise require a specific license from EUNA.

c. Documentation License. Subject to and conditioned on COUNTY's payment of Fees and compliance with the terms and conditions of this Agreement, EUNA hereby grants to COUNTY a non-exclusive, non-sublicensable, non-transferable (except in compliance with Section 22) license to use the Documentation during the Term solely for COUNTY's internal business purposes in connection with its use of the SAAS Offering.

d. Optional Features. EUNA shall provide all extensions, enhancements, and other changes, which are logical improvements to the SAAS Offering and to which EUNA makes generally available on a commercial basis, without charge, to other licensees of the EUNA SAAS Offering. Updates do not include any new software products that are then made generally available on a commercial basis as separate, price-listed options or additions to the SAAS Offering nor do they include any Professional Services that may be required for implementation.

e. Use Restrictions. COUNTY shall not use the SAAS Offering for any purposes beyond the scope of the access granted in this Agreement or the applicable Order Form. COUNTY shall not at any time, directly or indirectly, and shall not permit any Authorized Users to: (i) copy, modify, or create derivative works of

the SAAS Offering or Documentation, in whole or in part; (ii) rent, lease, lend, sell, license, sublicense, assign, distribute, publish, transfer, or otherwise make available the SAAS Offering or Documentation to a third party; (iii) reverse engineer, disassemble, decompile, decode, adapt, or otherwise attempt to derive or gain access to any software component of the SAAS Offering, in whole or in part; (iv) remove any proprietary notices from the SAAS Offering or Documentation; or (v) use the SAAS Offering or Documentation in any manner or for any purpose that causes such SAAS Offering or Documentation to infringe, misappropriate, or otherwise violate any Intellectual Property Right or other right of any person, or that violates any applicable Law.

f. Suspension. Notwithstanding anything to the contrary in this Agreement, EUNA may temporarily suspend COUNTY's and any Authorized User's access to any portion or all of the SAAS Offering if: (i) EUNA reasonably determines that (A) there is a threat or attack on any of the SAAS IP; (B) COUNTY's or any Authorized User's use of the SAAS IP disrupts or poses a security risk to the SAAS IP or to any other COUNTY or vendor of EUNA; (C) COUNTY or any Authorized User is using the SAAS IP for fraudulent or illegal activities; (D) subject to applicable Law, COUNTY has ceased to continue its business in the ordinary course, made an assignment for the benefit of creditors or similar disposition of its assets, or become the subject of any bankruptcy, reorganization, liquidation, dissolution, or similar proceeding; or (E) EUNA's provision of the SAAS Offering to COUNTY or any Authorized User is prohibited by applicable Law; (ii) any vendor of EUNA has suspended or terminated EUNA's access to or use of any third-party services or products required to enable COUNTY to access or use the SAAS Offering each a ("**Service Suspension**"). EUNA shall use commercially reasonable efforts to resume providing access to the SAAS Offering as soon as reasonably possible after the event giving rise to the Service Suspension is investigated, contained, remediated, and cured. EUNA will have no liability for any damage, liabilities, losses (including any loss of data or profits), or any other consequences that COUNTY or any Authorized User may incur as a result of a Service Suspension. In the event of a security incident, data breach, and/or privacy breach, EUNA will notify affected parties within the time frame legally required under applicable regulations or contractual obligation, generally within 72 hours of confirmation of an incident.

g. Aggregated Statistics. Notwithstanding anything to the contrary in this Agreement, EUNA may monitor COUNTY's use of the SAAS Offering and collect and compile Aggregated Statistics. As between EUNA and COUNTY, all right, title, and interest in Aggregated Statistics, and all Intellectual Property Rights therein, belong to and are retained solely by EUNA. COUNTY acknowledges that EUNA may compile Aggregated Statistics based on COUNTY Data input into the SAAS Offering. COUNTY agrees that EUNA may (i) make Aggregated Statistics publicly available in compliance with applicable Law, and (ii) use Aggregated Statistics to the extent and in the manner permitted under applicable Law. EUNA agrees to process COUNTY Data available in accordance with EUNA's privacy policy which is available upon request and incorporated by reference below. EUNA may update its privacy policy from time to time and such updated privacy policy will be effective upon signature by both parties.

4. COUNTY Obligations.

a. For Professional Services. In connection with the Professional Services, COUNTY shall:

(i) cooperate with EUNA in its performance of the Professional Services and provide access to COUNTY's premises, employees, contractors, and equipment as required to enable EUNA to provide the Professional Services;

(ii) provide Cooperation, as defined herein, and perform COUNTY facing milestones and COUNTY deliverables necessary to enable EUNA to continue to perform under the Order Form and Statement of Work; and

(iii) take all steps necessary, including obtaining any required licenses or consents, to prevent COUNTY-caused delays in EUNA's provision of the Professional Services.

b. For the SAAS Offering. In connection with the SAAS Offering:

(i) COUNTY agrees to be responsible and liable for all uses of the SAAS Offering and Documentation resulting from access provided by COUNTY, directly or indirectly, whether such access or use is permitted by or in violation of this Agreement. Without limiting the generality of the foregoing, COUNTY agrees to be responsible for all acts and omissions of Authorized Users, and any act or omission by an Authorized User that would constitute a breach of this Agreement if taken by COUNTY will be deemed a breach of this Agreement by COUNTY. COUNTY shall use reasonable efforts to make all Authorized Users aware of this Agreement's provisions as applicable to such Authorized User's use of the SAAS Offering and shall cause Authorized Users to comply with such provisions.

(ii) EUNA may from time to time make Third-Party Products available to COUNTY. For purposes of this Agreement, such Third-Party Products are subject to their own terms and conditions and the applicable flow-through provisions.

(iii) EUNA will use commercially reasonable efforts to implement the SAAS Offering. COUNTY acknowledges and agrees that COUNTY's timely provision of (and EUNA's access to) COUNTY's assistance, cooperation, and complete and accurate feedback, approvals, information, and data from COUNTY's officers, agents and employees as is reasonably requested by EUNA (collectively, "**Cooperation**") is essential to the implementation and operation of the SAAS Offering, and that EUNA shall not be liable for any deficiency, delay or failure in implementing or operating the SAAS Offering if such deficiency, delay or failure results from COUNTY's failure to provide full Cooperation as required hereunder. Cooperation will include designating a project manager to interface with EUNA during the course of EUNA's implementation or provision of the SAAS Offering. If COUNTY repeatedly fails to provide Cooperation, EUNA may terminate this Agreement in accordance with Section 10(b)(ii).

5. Fees and Expenses.

a. Fees. Except for Fees that COUNTY has successfully disputed, COUNTY shall pay the Fees without offset or deduction. Unless otherwise provided in the applicable Order Form, COUNTY shall pay the Fees in US dollars within thirty (30) days from the date of the applicable invoice, in accordance with the Texas Prompt Payment Act. If COUNTY fails to make any payment when due, without limiting EUNA's other rights and remedies: (i) EUNA may charge interest on the past due amount at statutory interest rate set forth in Texas Government Code Sec. 2251.025; (ii) if such failure continues for thirty (30) days or more, and in addition to all other remedies available under this Agreement or at law (which EUNA does not waive by the exercise of any rights hereunder), EUNA may suspend COUNTY's and its Authorized Users' access to any portion or all of the Professional Services and the SAAS Offering until such amounts are paid in full.

b. Taxes. Fees do not include any taxes. COUNTY is exempt by Law from payment of State and local sales tax and federal excise tax. In the event that taxes are assessed by any governmental body on any Deliverable provided under this Agreement, in which COUNTY is not exempted from paying, EUNA shall have the option to terminate the Agreement in lieu of assessment of the taxes against EUNA, provided however that COUNTY shall have the option to pay EUNA all such tax amounts which have been properly invoiced, at COUNTY's discretion, to avoid termination of this Agreement. COUNTY shall provide EUNA with a valid tax exemption certificate upon request.

6. Service Levels and Support.

a. Service Levels. Subject to and conditioned upon COUNTY's payment of Fees and compliance with the terms and conditions of this Agreement, EUNA will use commercially reasonable efforts to make the SAAS Offering available in accordance with the service levels set out in the provided service level documentation posted from time to time on EUNA's website (the "**Service Level Agreement**).

b. Support. Subject to and conditioned upon COUNTY's payment of Fees and compliance with the terms and conditions of this Agreement, EUNA will use commercially reasonable efforts to provide the support services described in the support services documentation posted from time to time on EUNA's website (the "**Service Level Agreement**).

c. Updates. Intentionally omitted.

7. Representations, Limited Warranties, and Disclaimer.

a. Representations. Each Party hereby represents and warrants that: (i) it has the full corporate right, power and authority to enter into this Agreement and to perform the acts required hereunder; and (ii) the execution of this Agreement by such Party, and the performance by such Party of its obligations and duties hereunder, do not and will not violate any agreement to which such Party is bound or any obligation of such Party.

b. Warranties for Professional Services. EUNA warrants that it will perform the Professional Services:

(i) in accordance with the terms and subject to the conditions set out in the respective Statement of Work or Order Form and this Agreement;

(ii) using personnel of commercially reasonable skill, experience, and qualifications; and

(iii) in a timely, workmanlike, and professional manner in accordance with generally recognized industry standards for similar services.

c. Warranties for the SAAS Offering. EUNA warrants that during the Term, the SAAS Offering will conform in all material respects to the Documentation when accessed and used in accordance with the Documentation. EUNA does not make any warranties, representations or guarantees regarding uptime or availability of the SAAS Offering except to the extent specifically included in the applicable Service Level Policy.. THE FOREGOING WARRANTIES, REPRESENTATIONS AND GUARANTEES DO NOT APPLY AND EUNA STRICTLY DISCLAIMS ALL WARRANTIES, REPRESENTATIONS AND GUARANTEES WITH RESPECT TO ANY THIRD-PARTY PRODUCTS OR ANY FAILURE IN PERFORMANCE CAUSED BY THIRD-PARTY PRODUCTS.

d. Remedies. EUNA's sole and exclusive liability and COUNTY's sole and exclusive remedy for breach of the warranties, representations and guarantees in this Agreement shall be as follows:

(i) EUNA shall use reasonable commercial efforts to promptly cure any such breach; provided, that if EUNA cannot cure such breach within thirty (30) days after COUNTY's written notice of such breach, COUNTY may, at its option, terminate this Agreement by serving written notice of termination.

(ii) For Professional Services, COUNTY's remedy for breach of the foregoing warranties, representations and guarantees shall be the re-performance of the relevant Professional Services free of charge to the extent the breach was caused solely by EUNA. The foregoing remedy shall not be available unless COUNTY provides written notice of such breach (which notice reasonably describes the breach and the deficiencies identified by COUNTY) within thirty (30) days after delivery of such Professional Service or Deliverable to COUNTY.

(iii) For any such breach involving a failure to meet the commitments in the Service Level Policy, EUNA's sole obligation and COUNTY's exclusive remedy shall be for EUNA to perform the remedies set forth in the Service Level Policy.

e. Disclaimer of Warranties. EXCEPT FOR THE LIMITED WARRANTIES SET FORTH IN THIS SECTION OF THE AGREEMENT, THE PROFESSIONAL SERVICES, DELIVERABLES, SAAS OFFERING AND EUNA IP ARE PROVIDED "AS IS" AND EUNA HEREBY DISCLAIMS ALL WARRANTIES, REPRESENTATIONS AND GUARANTEES WHETHER EXPRESS, IMPLIED, STATUTORY, OR OTHERWISE. EUNA SPECIFICALLY DISCLAIMS ALL IMPLIED WARRANTIES OF MERCHANTABILITY, FITNESS FOR A PARTICULAR PURPOSE, TITLE, AND NON-INFRINGEMENT, AND ALL WARRANTIES ARISING FROM COURSE OF DEALING, USAGE, OR TRADE PRACTICE. EXCEPT FOR THE LIMITED WARRANTIES SET FORTH IN THIS SECTION, EUNA MAKES NO WARRANTY, REPRESENTATION OR GUARANTEE OF ANY KIND THAT THE PROFESSIONAL SERVICES, DELIVERABLES, EUNA IP, OR ANY PRODUCTS OR RESULTS OF THE USE THEREOF, WILL MEET COUNTY'S, AN AUTHORIZED USER'S, OR ANY OTHER PERSON'S REQUIREMENTS, OPERATE WITHOUT INTERRUPTION, ACHIEVE ANY INTENDED RESULT, BE COMPATIBLE OR WORK WITH ANY SOFTWARE, SYSTEM, OR OTHER PROFESSIONAL, OR BE SECURE, ACCURATE, COMPLETE, FREE OF HARMFUL CODE, OR ERROR FREE.

8. Intellectual Property.

a. Deliverables. All Intellectual Property Rights in and to the Deliverables except for any Confidential Information of COUNTY shall be owned by EUNA. If any derivative work is created by COUNTY from the SaaS Offering EUNA shall own all right, title and interest in and to such derivative work.

b. SAAS IP and Documentation. COUNTY acknowledges that, as between COUNTY and EUNA, EUNA owns all right, title, and interest, including all Intellectual Property Rights, in and to the SAAS IP and Documentation and, with respect to Third-Party Products, the applicable third-party providers own all right, title, and interest, including all Intellectual Property Rights, in and to the Third-Party Products.

c. COUNTY Data. EUNA acknowledges that, as between EUNA and COUNTY, COUNTY either (i) owns all right, title, and interest, including all Intellectual Property Rights, in and to the COUNTY Data, or (ii) has a valid license with the right to sublicense the COUNTY Data to EUNA as provided herein. COUNTY hereby grants to EUNA a non-exclusive, royalty-free, worldwide license to reproduce, distribute, and otherwise use and display the COUNTY Data and perform all acts with respect to the COUNTY Data as may be necessary for EUNA to provide the SAAS Offering to COUNTY, and a non-exclusive, perpetual, irrevocable, royalty-free, worldwide license to reproduce, distribute, modify, and otherwise use and display COUNTY Data incorporated within the Aggregated Statistics. COUNTY represents, warrants and agrees that: (A) it will comply with applicable Law, including the Laws of the territories and jurisdictions from which any COUNTY Data is obtained or pertains, in collecting, using, disclosing, transmitting and in soliciting the transmission of COUNTY Data into or with the SAAS Offering as contemplated under this Agreement; (B) prior to transmitting (or soliciting the transmission of) any COUNTY Data to EUNA

through the SAAS Offering, COUNTY shall have all applicable consents and approvals required for the transmission of such COUNTY Data to EUNA; and (C) EUNA's use, storage, disclosure and other processing of COUNTY Data in accordance with this Agreement or COUNTY's instructions or direction will not cause EUNA or any of its vendors to violate any applicable Law or infringe the rights of any individual or third party.

d. Passwords. COUNTY is responsible for the confidentiality and use of its passwords, other credentials, and account, and in no event shall EUNA be liable for any loss of information of COUNTY or other claims arising from unauthorized access to the SAAS Offering as a result of the failure by COUNTY to protect the confidentiality of its passwords, other credentials or account.

e. Prohibited Information. Except as necessary to utilize the SAAS Offering, COUNTY shall not transmit, disclose or otherwise provide (or cause or allow to be transmitted or provided to EUNA): (i) health information, medical information, health insurance card information, policy identification numbers, or any other information that would cause EUNA to be classified as a "business associate" under the Health Insurance Portability and Accountability Act of 1996, as amended ("HIPAA") or similar designation under other Laws, (ii) information that causes ENUA to be subject to any Laws beyond those Laws generally applicable to all cloud service providers, (iii) security passwords or credentials, and/or (iv) data revealing race, ethnicity, political opinions, religion, sexual orientation, philosophical beliefs or trade union membership or any other information identified under applicable Law as "sensitive information," "private information," or like designation (collectively, "**Prohibited Information**"). If COUNTY transmits or provides to EUNA any Prohibited Information, EUNA shall have no liability or obligation whatsoever with respect to such Prohibited Information or COUNTY Data provided to EUNA.

f. Feedback. If COUNTY or any of its employees or contractors provides, sends or transmits any communications or materials to EUNA by mail, email, telephone, or otherwise, suggesting or recommending changes to the SAAS Offering, Documentation, Software, Professional Services, or any of EUNA's Intellectual Property Rights, including without limitation, the SAAS IP and new features or functionality relating thereto, or any comments, questions, suggestions, or the like ("**Feedback**"), EUNA is free to use such Feedback irrespective of any other obligation or limitation between the Parties governing such Feedback. COUNTY hereby assigns and agrees to assign to EUNA, and will cause its employees, contractors and/or agents to assign to EUNA, all right, title, and interest in and to the Feedback, including all Intellectual Property Rights in the Feedback, to EUNA without further consideration. EUNA is free to use, without any attribution or compensation to any party, any ideas, know-how, concepts, techniques, or other Intellectual Property Rights contained in the Feedback, for any purpose whatsoever, although EUNA is not required to use any Feedback.

g. Reservation of Rights. EUNA reserves all rights not expressly granted to COUNTY in this Agreement. Except for the limited rights and licenses expressly granted under this Agreement, nothing in this Agreement grants, by implication, waiver, estoppel, or otherwise, to COUNTY or any third party any Intellectual Property Rights or other right, title, or interest in or to the Professional Services or SAAS IP.

9. Confidentiality.

a. Generally. From time to time during the Term, either Party (as the "**Disclosing Party**") may disclose or make available to the other Party (as the "**Receiving Party**") Confidential Information. Subject to the requirements of the limitations stated in Section 9(f) below, Confidential Information shall at all times remain the property of the Disclosing Party. The Receiving Party shall: (A) protect and safeguard the confidentiality of the Disclosing Party's Confidential Information with at least the same degree of care as the Receiving Party protects its own Confidential Information, but in no

event with less than a commercially reasonable degree of care; (B) not use the Disclosing Party's Confidential Information, or permit it to be accessed or used, for any purpose other than to exercise its rights or perform its obligations under this Agreement; and (C) except as permitted in this Agreement, not disclose any such Confidential Information to any person or entity, except to the Receiving Party's representatives (including EUNA's affiliates and third party service providers) who need to know the Confidential Information to assist the Receiving Party, act on its behalf, or to exercise its rights or perform its obligations under this Agreement. The obligations in this section do not apply to Confidential Information that: (i) is or becomes generally available to the public other than as a result of the Receiving Party's breach of this Section; (ii) is or becomes available to the Receiving Party on a non-confidential basis from a third-party source, provided that such third party is not and was not prohibited from disclosing such Confidential Information; (iii) was in the Receiving Party's possession prior to the Disclosing Party's disclosure hereunder; or (iv) was or is independently developed by the Receiving Party without using any Confidential Information of the Disclosing Party.

b. Permitted Disclosures. Notwithstanding the foregoing, each Party may disclose Confidential Information to the limited extent required to establish a Party's rights under this Agreement, including to make required court filings. To the extent required by applicable law or regulation, or if a Receiving Party is faced with judicial or governmental action to disclose Confidential Information of the Disclosing Party, the Receiving Party must, if legally permissible, notify the Disclosing Party forthwith and, at the Disclosing Party's request, provide reasonable assistance in opposing such action at the Disclosing Party's cost and expense.

c. Destruction. On the expiration or termination of the Agreement, the Receiving Party shall promptly destroy all copies of the Disclosing Party's Confidential Information in its possession or control and upon request certify in writing to the Disclosing Party that such Confidential Information has been destroyed, provided, however, that a Receiving Party may retain Confidential Information relevant to any pending or threatened litigation or governmental investigation and EUNA may retain COUNTY's Confidential Information in accordance with its information retention policies and Section 15.a, below.

d. Irreparable Harm. Each Party acknowledges that Confidential Information may constitute unique, valuable, proprietary and trade secret information of the Disclosing Party, and that unauthorized disclosure thereof by the Receiving Party may cause irreparable injury to the Disclosing Party. Accordingly, each Party acknowledges and agrees that monetary damages may not be adequate in the event of a default of this Article 9 and, therefore, that the Disclosing Party may be entitled to injunctive or other affirmative relief, without such constituting an election of remedies, and that the Disclosing Party will not be required to obtain, furnish or post any bond or similar instrument in connection with or as a condition to obtaining any remedy referred to in this Article 9, and each Party irrevocably waives any right it may have to require the obtaining, furnishing or posting of any such bond or similar instrument.

e. Duration. Each Party's obligations of non-disclosure with regard to Confidential Information are effective as of the Effective Date and will expire five years from the date first disclosed to the Receiving Party; provided, however, with respect to any Confidential Information that constitutes a trade secret (as determined under applicable Law), such obligations of non-disclosure will survive the termination or expiration of this Agreement for as long as such Confidential Information remains subject to trade secret protection under applicable Law.

f. Texas Public Information Act. COUNTY advises EUNA that COUNTY is a governmental body under Chapter 552 of the Texas Government Code and that certain information that is collected, assembled, or maintained in connection with the transaction of official business by a governmental body

is considered public information potentially subject to disclosure pursuant to a valid Texas Public Information Act ("TPIA") request. EUNA's trade secrets, certain financial information, and proprietary information may be subject to an exception to disclosure under Chapter 552 of the Texas Government Code, Subchapter C. If a TPIA request is made on COUNTY to disclose EUNA information that may be subject to an exception from disclosure, COUNTY will (i) promptly notify EUNA of such request for disclosure, and (ii) decline to release such information and file a written request with the Texas Attorney General's office seeking a determination as to whether such information may be withheld.

10. Term, Termination, and Survival.

a. Term. The term of this Agreement (the "**Term**") commences upon the date written by the last party to sign this Agreement and will continue in effect for as long as there is an outstanding Order Form in place. Each Order Form will continue for the applicable term listed in such Order Form until terminated by either Party in accordance with this Agreement. The termination or expiration of an Order Form will not affect or otherwise terminate this Agreement or any other Order Form covering other products or services in effect at such time. The parties acknowledge and agree that Tarrant County is a governmental entity subject to yearly funding limitations and Vendor agrees County may terminate this Agreement during any future fiscal years in which funding is not allocated by the Commissioner's Court for services/products covered under this Agreement.

b. User Subscriptions. All user subscriptions in an Order Form shall renew only upon mutual written agreement by both parties for additional one-year at the end of the then current subscription term listed on the Order Form, unless the COUNTY gives the other notice of non-renewal at least thirty (30) days before the end of the relevant subscription term. The per-unit pricing during any such renewal term of the subscription shall be the same as that during the prior term unless EUNA gives written notice of a pricing increase at least sixty (60) days before the end of such prior term, in which case the pricing increase shall be effective upon renewal and thereafter.

c. Termination for Convenience. COUNTY may terminate this Agreement without cause by giving thirty (30) days advance written notice to EUNA of its election to terminate this Agreement pursuant to this provision.

d. Termination for Cause. In addition to any other express termination right set forth in this Agreement:

(i) either Party may terminate this Agreement, effective on written notice to the other Party, if the other Party materially breaches this Agreement, and such breach: (A) is incapable of cure; or (B) being capable of cure, remains uncured thirty (30) days after the non-breaching Party provides the breaching Party with written notice of such breach; or

(ii) either Party may terminate this Agreement, effective immediately upon written notice to the other Party, if the other Party: (A) becomes insolvent or is generally unable to pay, or fails to pay, its debts as they become due; (B) files or has filed against it, a petition for voluntary or involuntary bankruptcy or otherwise becomes subject, voluntarily or involuntarily, to any proceeding under any domestic or foreign bankruptcy or insolvency Law; (C) makes or seeks to make a general assignment for the benefit of its creditors; or (D) applies for or has appointed a receiver, trustee, custodian, or similar agent appointed by order of any court of competent jurisdiction to take charge of or sell any material portion of its property or business.

e. Effect of Expiration or Termination. Upon expiration or earlier termination of this Agreement, EUNA will immediately cease providing any Professional Services and COUNTY shall immediately

discontinue use of the SAAS Offering. No expiration or termination will affect COUNTY's obligation to pay all Fees due prior to such expiration or termination.

f. Non-Appropriation. In the event COUNTY is not granted an appropriation of funds at any time during the Term and the non–appropriation did not result from an act or omission by COUNTY, COUNTY shall have the right to terminate this Agreement on the last day of the fiscal period for which appropriations were received without penalty or expense to COUNTY, except as to the portion of the payments for which fund shall have been appropriated and budgeted. At least thirty (30) days prior to the end of COUNTY's fiscal period, COUNTY shall certify in writing that (1) funds have not been appropriated for the next fiscal period, (b) such non-appropriation did not result from any act or failure to act by COUNTY; and (c) COUNTY has exhausted all funds legally available to pay EUNA. If COUNTY terminates this Agreement because of non-appropriation of funds, COUNTY may not purchase or lease during the subsequent fiscal period, software and/or service performing the same function as, or functions taking the place of those performed by the software and/or service provided by EUNA; however, that these restrictions shall not be applicable if or to the extent that the application of these restrictions would affect the validity of this Agreement.

g. Survival. Sections 3.g, 4, 5, 7, 8, 9, 10, 11, 12, and 14-34 survive any termination or expiration of this Agreement. No other provisions of this Agreement survive the expiration or earlier termination of this Agreement.

11. Indemnification.

a. EUNA Indemnification.

(i) EUNA SHALL INDEMNIFY, DEFEND, AND HOLD HARMLESS COUNTY FROM AND AGAINST ANY AND ALL LOSSES, DAMAGES, LIABILITIES, COSTS (INCLUDING REASONABLE ATTORNEYS' FEES) ("**LOSSES**") INCURRED BY COUNTY RESULTING FROM ANY THIRD-PARTY CLAIM, SUIT, ACTION, OR PROCEEDING ("**THIRD-PARTY CLAIM**") THAT THE SAAS OFFERING OR PROFESSIONAL SERVICES, OR ANY USE OF THE SAAS OFFERING OR PROFESSIONAL SERVICES IN ACCORDANCE WITH THIS AGREEMENT, INFRINGES OR MISAPPROPRIATES SUCH THIRD PARTY'S INTELLECTUAL PROPERTY RIGHTS, PROVIDED THAT COUNTY PROMPTLY NOTIFIES EUNA IN WRITING OF SUCH THIRD-PARTY CLAIM, COOPERATES WITH EUNA, AND ALLOWS EUNA SOLE AUTHORITY TO CONTROL THE DEFENSE AND SETTLEMENT OF SUCH THIRD-PARTY CLAIM.

(ii) If a Third-Party Claim is made or appears possible, COUNTY agrees to permit EUNA, at EUNA's sole discretion, to (A) modify or replace the SAAS Offering or Professional Services or component or part thereof, to make it non-infringing, (B) obtain the right for COUNTY to continue use, or (C) terminate the license for the SAAS Offering and Professional Services and provide a pro rata refund to COUNTY. If EUNA determines that none of these alternatives is reasonably available, EUNA may terminate this Agreement, in its entirety or with respect to the affected component or part, effective immediately on written notice to COUNTY.

(iii) This Section will not apply to the extent that the alleged infringement arises from: (A) use of the SAAS Offering or Professional Services in combination with data, software, hardware, equipment, or technology not provided by EUNA or authorized by EUNA in writing; (B) modifications to the SAAS Offering or Professional Services not made by EUNA; or (C) COUNTY Data; or (D) Third-Party Products.

b. COUNTY Indemnification. Intentionally Omitted.

c. Sole Remedy. THIS SECTION SETS FORTH COUNTY'S SOLE REMEDIES AND EUNA'S SOLE

LIABILITY AND OBLIGATION FOR ANY ACTUAL, THREATENED, OR ALLEGED CLAIMS THAT THE PROFESSIONAL SERVICES OR SAAS OFFERING INFRINGES, MISAPPROPRIATES, OR OTHERWISE VIOLATES ANY INTELLECTUAL PROPERTY RIGHTS OF ANY THIRD PARTY.

12. Limitation of Liability.

a. IN NO EVENT SHALL EUNA BE LIABLE TO COUNTY OR TO ANY THIRD PARTY FOR ANY LOSS OF USE, REVENUE, OR PROFIT OR LOSS OF DATA OR DIMINUTION IN VALUE, OR FOR ANY CONSEQUENTIAL, INCIDENTAL, INDIRECT, EXEMPLARY, SPECIAL, OR PUNITIVE DAMAGES WHETHER ARISING OUT OF BREACH OF CONTRACT, TORT (INCLUDING NEGLIGENCE), OR OTHERWISE, REGARDLESS OF WHETHER SUCH DAMAGE WAS FORESEEABLE AND WHETHER OR NOT EUNA HAS BEEN ADVISED OF THE POSSIBILITY OF SUCH DAMAGES, AND NOTWITHSTANDING THE FAILURE OF ANY AGREED OR OTHER REMEDY OF ITS ESSENTIAL PURPOSE.

b. IN NO EVENT SHALL EUNAS AGGREGATE LIABILITY ARISING OUT OF OR RELATED TO THIS AGREEMENT, WHETHER ARISING OUT OF OR RELATED TO BREACH OF CONTRACT, TORT (INCLUDING NEGLIGENCE), OR OTHERWISE, EXCEED THE AGGREGATE AMOUNTS PAID OR PAYABLE TO EUNA PURSUANT TO THE APPLICABLE ORDER FORM IN THE TWELVE (12) MONTH PERIOD PRECEDING THE EVENT GIVING RISE TO THE CLAIM. ADDITIONALLY, IN NO EVENT WILL EUNA BE LIABLE FOR ANY CLAIM BROUGHT BY COUNTY MORE THAN ONE (1) YEAR AFTER THE CAUSE OF ACTION AROSE OR REASONABLY SHOULD HAVE BEEN DISCOVERED.

c. UNDER NO CIRCUMSTANCES SHALL EUNA HAVE ANY LIABILITY OR RESPONSIBILITY FOR THE ACCURACY OF ANY COUNTY DATA THAT IS INPUTTED INTO THE SAAS OFFERING.

13. Press Release. The Parties may issue a joint press release announcing the launch of the SAAS Offering and COUNTY's use thereof. Such press releases shall be subject to COUNTY's approval. Additionally, during the Term, EUNA may list COUNTY as a customer of EUNA.

14. Information Security. Each Party will maintain reasonable administrative, technical and physical safeguards which are consistent with industry standards to protect the security, confidentiality and integrity of, and to protect against threats or hazards to the integrity of, and the unlawful, intentional, unauthorized or accidental destruction, loss, alteration, theft, misappropriation, disclosure, access or use of the other Party's Confidential Information, Intellectual Property, and, (i) in the case of EUNA, the COUNTY Data, and (ii) in the case of COUNTY, the SAAS IP.

15. Export of Data.

a. COUNTY Data. Upon termination, cancellation, expiration, or other conclusion of this Agreement, COUNTY may request that EUNA remove COUNTY Data from EUNA's production systems. COUNTY acknowledges that as part of a commercially reasonable backup strategy, EUNA does maintain long term archival backups that may continue to contain COUNTY Data after termination of this Agreement. EUNA agrees not to utilize such archival backups for the specific purpose of accessing COUNTY Data after termination of this Agreement, unless specifically authorized to do so by COUNTY.

b. Data Extraction. During the Term of this Agreement, COUNTY may utilize the standard functionality of the SAAS Offering for its intended purpose, including the ability to download data and copies of documents loaded into or generated by the SAAS Offering. COUNTY shall have the right to retain a copy of all downloaded documents. During the Term of and within thirty (30) days following termination of this Agreement, COUNTY may request EUNA to provide consulting services to COUNTY in order to perform a custom extract of COUNTY data from the SAAS Offering. Custom data extracts will be provided

electronically in a text delimited flat file format (or other mutually acceptable format) and will be scrubbed of all EUNA proprietary data structures. COUNTY and EUNA will work together to determine a list of the specific data elements to be provided, at which point EUNA will provide an estimate of the time required to extract the data. Once the estimate has been provided, if COUNTY wishes EUNA to proceed with the data extract, COUNTY will make a mobilization payment of fifty percent (50%) of the estimated amount to EUNA. After receipt of this payment, EUNA will then have thirty (30) days to deliver the data extracts to COUNTY. COUNTY shall have thirty (30) days upon receipt of the data to review for acceptance. Upon acceptance, EUNA will provide COUNTY with a final accounting of hours and COUNTY shall be responsible for payment of the additional consulting fees. EUNA warrants that all data will be exportable in an electronically readable and usable format at contract end without any additional charges to the county. If COUNTY decides to extract data itself, it can do so at no cost. EUNA will provide instructions to COUNTY on how to use the existing interface to extract and download the data in original formats and various other formats.

16. Authorized Reseller Status; Option to Purchase Affiliate Products. GTY Technology Holdings Inc. is the parent company to multiple other SaaS companies under the Euna brand, including Euna Solutions, Inc. in the U.S. (such subsidiaries, "Affiliates"). These Affiliates sell purpose-built products and services for the public sector ("Affiliate Products"). As of the Effective Date, Affiliates include Euna Solutions Inc., CityBase Inc., and Streamlink Software Inc. dba Amplifund. In addition to the products and services that are the subject of this Agreement, Customer has the option to purchase from either Euna, as an authorized reseller, or Affiliates, the Affiliate Products on same terms of the Agreement. Notwithstanding the foregoing, Customer understands that different order forms, statement of work(s), and product specific service level agreements may apply. Customer will be provided the Affiliate's additional product terms and will have the opportunity to review and consent to such terms.

17. Entire Agreement. This Agreement, including and together with the Order Form referencing this SAAS and Services Agreement, and any Statements of Work, policies, and other documents referenced and incorporated herein or in the Order Form, constitutes the sole and entire agreement of the Parties with respect to the subject matter contained herein, and supersedes all prior and contemporaneous understandings, agreements, representations and warranties, both written and oral, regarding such subject matter. The Parties acknowledge and agree that if there is any conflict between the terms and conditions of this Agreement and the terms and conditions of any Order Form, the Order Form followed by the Service Level Policy shall supersede and control. To the extent the Order Form links to legal terms other than this SAAS and Services Agreement or a Statement of Work, those terms shall not apply. In the event of any inconsistency or conflict of terms, Tarrant County RFP F2025098 Annual Contract for Grants Management Software and Maintenance and Vendor's response to RFP F2025098 Annual Contract for Grants Management Software and Maintenance, shall control.

18. Notices. All notices, requests, consents, claims, demands, waivers and other communications under this Agreement must be in writing and addressed to the other Party at its address in the Order Form (or to such other address that the receiving Party may designate from time to time in accordance with this Section).

For Notices to EUNA, legal@eunasolutions.com shall be sent a courtesy email notification. Unless otherwise agreed herein, all Notices must be delivered by personal delivery, nationally recognized overnight courier or certified or registered mail (in each case, return receipt requested, postage prepaid). Except as otherwise provided in this Agreement, a Notice is effective only (a) on receipt by the receiving Party; and (b) if the Party giving the Notice has complied with the requirements of this Section.

19. Severability. If any term or provision of this Agreement is found by a court of competent

jurisdiction to be invalid, illegal or unenforceable in any jurisdiction, such invalidity, illegality or unenforceability shall not affect any other term or provision of this Agreement or invalidate or render unenforceable such term or provision in any other jurisdiction. Upon a determination that any term or provision is invalid, illegal or unenforceable, the court may modify this Agreement to effect the original intent of the Parties as closely as possible in order that the transactions contemplated hereby be consummated as originally contemplated to the greatest extent possible.

20. Amendments. No amendment to or modification of this Agreement is effective unless it is in writing and signed by an authorized representative of each Party.

21. Waiver. No waiver by any Party of any of the provisions of this Agreement shall be effective unless explicitly set forth in writing and signed by the Party so waiving. Except as otherwise set forth in this Agreement, no failure to exercise, or delay in exercising, any right, remedy, power or privilege arising from this Agreement shall operate or be construed as a waiver thereof, nor shall any single or partial exercise of any right, remedy, power or privilege hereunder preclude any other or further exercise thereof or the exercise of any other right, remedy, power or privilege.

22. Assignment. Neither Party shall assign, transfer, delegate or subcontract any of its rights or delegate any of its obligations under this Agreement without the prior written consent of the other Party. Any purported assignment or delegation in violation of this Section shall be null and void. No assignment or delegation shall relieve COUNTY of any of its obligations under this Agreement. Notwithstanding the foregoing, EUNA may assign this Agreement and any of its rights or delegate any of its obligations to any affiliate, subsidiary, or to any person acquiring all or substantially all of EUNA's assets without COUNTY's consent.

23. Successors and Assigns. This Agreement is binding on and inures to the benefit of the Parties to this Agreement and their respective permitted successors and permitted assigns.

24. Relationship of the Parties. The relationship between the Parties is that of independent contractors. The details of the method and manner for performance of the Services by EUNA shall be under its own control, COUNTY being interested only in the results thereof. EUNA shall be solely responsible for supervising, controlling, and directing the details and manner of the completion of the Professional Services and the provision of the SAAS Offering. Nothing in this Agreement shall give COUNTY the right to instruct, supervise, control, or direct the details and manner of the completion of the Professional Services or the provision of the SAAS Offering. Nothing contained in this Agreement shall be construed as creating any agency, partnership, joint venture or other form of joint enterprise, employment or fiduciary relationship between the Parties, and neither Party shall have authority to contract for or bind the other Party in any manner whatsoever.

25. No Third-Party Beneficiaries. This Agreement benefits solely the Parties to this Agreement and their respective permitted successors and assigns and nothing in this Agreement, express or implied, confers on any other person any legal or equitable right, benefit, or remedy of any nature whatsoever under or by reason of this Agreement.

26. Choice of Law. This Agreement and all related documents, and all matters arising out of or relating to this Agreement, whether sounding in contract, tort, or statute are governed by, and construed in accordance with, the Laws of the State of Texas, United States of America, without giving effect to the conflict of laws provisions thereof to the extent such principles or rules would require or permit the application of the Laws of any jurisdiction other than those of the State of Texas, United States of America.

27. Choice of Forum. Each Party irrevocably and unconditionally agrees that it will not commence any

action, litigation or proceeding of any kind whatsoever against the other Party in any way arising from or relating to this Agreement, including all exhibits, schedules, attachments and appendices attached to this Agreement, and all contemplated transactions, including contract, equity, tort, fraud and statutory claims, in any forum other than the state or federal district courts located in Tarrant County, Texas, and any appellate court from any thereof. Each Party irrevocably and unconditionally submits to the exclusive jurisdiction of such courts and agrees to bring any such action, litigation or proceeding only in the courts of the state or federal district courts located in Tarrant County, Texas. Each Party agrees that a final judgment in any such action, litigation, or proceeding is conclusive and may be enforced in other jurisdictions by suit on the judgment or in any other manner provided by law.

28. Export Regulation. COUNTY shall comply with all applicable Laws, and complete all required undertakings (including obtaining any necessary export license or other governmental approval), that prohibit or restrict the export or re-export of the SAAS Offering or any COUNTY Data outside the US.

29. WAIVER OF JURY TRIAL. EACH PARTY ACKNOWLEDGES THAT ANY CONTROVERSY THAT MAY ARISE UNDER THIS AGREEMEN IS LIKELY TO INVOLVE COMPLICATED AND DIFFICULT ISSUES AND, THEREFORE, EACH SUCH PARTY IRREVOCABLY AND UNCONDITIONALLY WAIVES ANY RIGHT IT MAY HAVE TO A TRIAL BY JURY IN RESPECT OF ANY LEGAL ACTION ARISING OUT OF OR RELATING TO THIS AGREEMENT OR THE TRANSACTIONS CONTEMPLATED HEREBY.

30. Counterparts. This Agreement may be executed in counterparts, each of which is deemed an original, but all of which together are deemed to be one and the same agreement. A signed copy of this Agreement delivered by facsimile, email, or other means of electronic transmission is deemed to have the same legal effect as delivery of an original signed copy of this Agreement.

31. Force Majeure. "**Force Majeure Events**" means events beyond a Party's reasonable control, including without limitation acts of nature, labor disputes, the stability or availability of the Internet or a portion thereof, actions by a governmental authority (such as a moratorium on any activities related to this Agreement or changes in Laws), telecommunication or Internet network failures or brown-outs, failures or unavailability of third party systems, networks or software, flood, earthquake, fire, lightning, epidemics, war, acts of terrorism, riots, civil disturbances, sabotage, power grid failures, and denial of service attacks and other hacking attacks. Neither Party shall be liable for any loss, damage or penalty resulting from delays or failures in performance resulting from Force Majeure Events (except for any obligations of COUNTY to make payments to EUNA hereunder). The Party affected by the Force Majeure Event will promptly notify the other Party and will resume performance when the Force Majeure Event is no longer effective and the impact has been remediated.

32. Equitable Relief. Each Party acknowledges and agrees that a breach or threatened breach by such Party of any of its obligations would cause the other Party irreparable harm for which monetary damages would not be an adequate remedy and agrees that, in the event of such breach or threatened breach, the other Party will be entitled to equitable relief, including a restraining order, an injunction, specific performance, and any other relief that may be available from any court, without any requirement to post a bond or other security, or to prove actual damages or that monetary damages are not an adequate remedy. Such remedies are not exclusive and are in addition to all other remedies that may be available at law, in equity, or otherwise.

33. Government Use. The SAAS Offering, Documentation are "commercial items" as that term is defined in FAR 2.101, consisting of "commercial computer software" and "commercial computer software documentation," respectively, as such terms are used in FAR 12.212 and DFARS 227.7202. If the SAAS Offering or Documentation are being acquired by or on behalf of the U.S. Government, then, as provided

in FAR 12.212 and DFARS 227.7202-1 through 227.7202-4, as applicable, the U.S. Government's rights in the foregoing will be only those specified in this Agreement. COUNTY's rights in the SAAS Offering and Documentation are limited to those expressly granted in Section 3.

34. Cooperative Statement. Other government organizations and educational or health care institutions may elect to participate in this Agreement (piggyback) at their discretion provided EUNA also agrees to do so in writing.

35. Compliance with Laws. "In providing the services required by this Agreement, Vendor must observe and comply with all applicable federal, state, and local statutes, ordinances, rules, and regulations, including, without limitation, workers' compensation laws, minimum and maximum salary and wage statutes and regulations, and non-discrimination laws and regulations. Vendor shall be responsible for ensuring its compliance with any laws and regulations applicable to its business, including maintaining any necessary licenses and permits."

36. Execution of Agreement. This agreement may be executed in one or more counterparts, each of which will be deemed to be an original copy of this agreement, and all of which, when taken together, shall be deemed to constitute one and the same agreement. The exchange of copies of this agreement and of signature pages by electronic transmission shall constitute effective execution and delivery of this agreement as to the parties and may be used in lieu of the original agreement for all purposes. Signatures of the parties transmitted or executed electronically shall be deemed to be their original signatures for any purpose whatsoever.

37. Insurance. EUNA shall maintain, at its own expense, insurance coverage in types and amounts that are commercially reasonable and customary for companies providing similar services, including but not limited to general liability, professional liability, and cyber liability insurance. Upon written request by Customer, Euna shall provide a current certificate of insurance evidencing such coverage no more than once annually.

38. Chapters 2271, 2252, 2274, and 2276 Texas Government Code Verification.

a. Boycott of Israel Prohibited. In compliance with Section 2271.001 et seq. of the Texas Government Code, EUNA verifies that neither it nor any of its affiliates currently boycott Israel and neither it nor any of its affiliates will boycott Israel during the term of this Agreement. "Boycott Israel" is defined in Section 808.001(1) of the Texas Government Code.

b. Scrutinized Business Operations Prohibited. In compliance with Section 2252.151 et seq. of the Texas Government Code, EUNA warrants and represents that: (1) neither EUNA nor any of its affiliates engages in scrutinized business operations in Sudan; (2) neither EUNA nor any of its affiliates engages in scrutinized business operations in Iran; and (3) neither EUNA nor any of its affiliates engages in scrutinized business operations with designated foreign terrorist organizations. "Scrutinized business operations in Sudan" is defined in Section 2270.0052 of the Texas Government Code. "Scrutinized business operations in Iran" is defined in Section 2270.0102 of the Texas Government Code. "Scrutinized business operations with designated foreign terrorist organizations" is defined in Section 2270.0152 of the Texas Government Code. EUNA further represents and warrants that neither EUNA nor any of its affiliates appears on any of the Texas Comptroller's Scrutinized Companies Lists.

c. Discrimination Against Firearm Entities or Firearm Trade Associations Prohibited. In

compliance with Section 2274.002 of the Texas Government Code, EUNA verifies that neither it nor any of its affiliates have a practice, policy, guidance, or directive that discriminates against a firearm entity or firearm trade association; and neither it nor any of its affiliates will discriminate during the term of the Agreement against a firearm entity or firearm trade association. "Discriminate against a firearm entity or firearm trade association" is defined in Section 2274.001(3).

d. Boycott of Certain Energy Companies Prohibited. In compliance with Section 2276.002 of the Texas Government Code, EUNA verifies that neither it nor any of its affiliates currently boycott energy companies and neither it nor any of its affiliates will boycott energy companies during the term of this Agreement. "Boycott energy company" is defined in Section 809.001(1) of the Texas Government Code.

[END OF AGREEMENT]

Euna Solutions, Inc. (USA)
363 W. Erie St., Floor 7
Chicago, IL 60654

EUNA PRIVACY POLICY

Effective Date: December 8, 2023

Introduction

Euna Solutions, is a government technology company with locations in Chicago, Illinois; Springfield, Missouri; and Oakville, Ontario.

This Privacy Policy covers our collection, use and disclosure of information about identifiable individuals and information that can be used to identify any individual ("Personal Information").

Personal Information may be collected via our websites, software services, social media sites, and other marketing media, which collectively include:

- The use of the https://eunasolutions.com and the websites of Euna Solutions subsidiaries (each, a "**Website**");
- Social media messaging and marketing campaigns;
- Electronic communications with Euna Solutions; and/or
- End User accounts created and maintained within Euna Solutions software services.
  By visiting any of our websites or using our products and software services (collectively, the "Website") in any manner, you acknowledge that you accept the practices and policies outlined in this Privacy Policy and you hereby consent to the collection, use and disclosure of your Personal Information in accordance with this Privacy Policy.

We provide Software-as-a-Service (SaaS) solutions ("**Platform Services**") that are intended for use by public sector organizations (our "**Customers**") and their employees, customers, constituents, and suppliers (collectively, "**End Users**" of our Platform Services). When using our Platform Services, our Customers are responsible for maintaining their own privacy policies governing the collection, use and disclosure of any Personal Information entered into our Platform Services. Our Customers are also responsible for obtaining any necessary authorization and/or consent for Personal Information you make available to others through our Platform. Euna Solutions is not a data controller and will adhere to Customer requirements with respect to the processing of Customer information, provided that those requirements are provided to Euna Solutions in writing. Information related to the security and privacy practices associated with our Platform is contained within our product documentation and available to customers and prospective clients upon request.

Euna Solutions does not sell your Personal Information to third parties. We do, however, use third parties to help us provide our services to you. They may have access to your Personal Information as collected by the Website, our Platform Services, or third-party services that are integrated with our Website and Platform Services, as reasonably necessary to perform the contracted tasks on our behalf. Accordingly, we sign agreements, with our third-party vendors and suppliers that do not permit them to sell or disclose any Personal Information we share with them.

This Privacy Policy does not apply to the practices of companies that we do not own or control.

Personal information we collect

Information you choose to provide to us

When accessing *the* Website, to include registering with our Platform Services, we may ask you to provide Personal Information to:

- Download articles, data sheets or eBooks
- Request a free trial or demo
- Refer a friend to us
- Communicate with us directly
- Create an End User account and user profile
- Participate in a marketing or sales promotion
- Attend trade events and other industry networking events
- Register or attend a webinar or other event
- Participate in programs we may offer from time to time
- Apply for a job opening
- Pay for our services

To support these functions, we may request the following types of Personal Information about you:

- First and last name
- Business contact information to include your email address, phone number, mailing address, job title, and/or company name
- Additional information you choose to include within your End User profile (e.g., a profile picture)
- Information you provide when filling in forms on the Website. For example, to subscribe to our newsletter, respond to a survey, enter a contest or promotion sponsored by us, or request services
- Information you may provide when you report a problem with the Website
- A resume and a cover letter
- Billing and payment information to include credit card information.

If you choose to provide us with a third-party's Personal Information (the person's name, email and company) when taking part in our referral program, you represent that you have the third-party's permission to do so.

Information we automatically collect

As you visit, browse, or use the Website, we may use automatic data collection technologies to collect certain information about your equipment, network connection, interactions with the Website, and usage patterns, including:

- Your search queries and details about pages visited, the links you clicked on, access times, and actions you take in connection with any of the visited pages
- Communications details including location data, logs and other network communication data

- Information about your computer and internet connection, including your IP address, operating system and browser type.

The information we collect automatically is primarily statistical data and does not include Personal Information, but we may maintain it or associate it with Personal Information we collect in other ways or receive from third parties. This information helps us to improve the Website so that we can deliver a better and more personalized service to you.

We use cookies throughout the Website to recognize and authenticate visitors and End Users. A cookie is a small amount of data, which may include a unique identifier. Cookies are sent to your browser from a website and stored on your device. We assign a different cookie to each device that accesses the Website. We use session cookies containing encrypted information to allow the system to uniquely identify you while you are logged in to our Platform Services. This information allows us to securely process your online transactions and requests. If you disable cookies, you may not be able to take advantage of all the features of the Website and/or Platform Services. We do not link any of the information we use in cookies to any Personally Information submitted by you when you are on the Website; however, we may combine data derived from our usage of cookies with account information of registered users of our Platform Services.

Some content or applications on the Website are served by third parties, including servers, content providers and application providers. These third parties may use cookies alone or in conjunction with web beacons or other tracking technologies to collect information about you when you use our Website. Third parties may use this information to provide you with interest-based, or behavioral, advertising or other targeted content.

We may also collect information when you open email messages from us or click on links within those email messages

Information we may collect from third parties

We may combine information we collect from your direct interactions with us with information obtained through other third-party sources. We also obtain and/or purchase lists from third parties for individuals and companies interested in our products.

The information we collect from third parties may include your name, email address, business address, job title, company name, and telephone number.

How we use personal information

We use your Personal Information to:

- Advertise and market our products and services, including delivering interest-based advertisements on the Website and other sites or content syndication platforms and websites
- Send communications to you about:
    - New application features and upgrades
    - Our services and offerings
    - Event announcements
    - Product notices and changes to our terms and policies
    - Particular programs in which you have chosen to participate
    - Promotional offers and surveys

- Scheduling demos and managing free trials
- Communicate with you directly through emails, calls, chats and video conferencing
- Deliver training and support to our Platform End Users and/or carry out the transactions you have requested
- Process payments for Platform subscriptions. • Create and manage marketing campaigns
- Generate sales leads
- Analyze user clicks and usage of the Website to improve user experience, maximize usage of our services and diagnose problems
- Manage the Website to maintain and deliver requested and contracted services
- Enforce our Website terms and/or separate contracts (if applicable)
- Prevent fraud and other prohibited or illegal activities
- Protect the security or integrity of the Website and Platform Services
- Or otherwise, as disclosed to you at the point of collection or as required or permitted by law.

Please note that sometimes we may record a conference call in which you participate. If we do so, we will announce that a recording is taking place and enable you to opt-out

How we share personal information

We may share your Personal Information in the following ways:

- Internally: We may share your information with our parent, subsidiary, and affiliate entities and our portfolio of companies
- With Our Service Providers: We may share your information with third parties who perform services on our behalf. For example, this may include companies that send emails on our behalf or help us run the Website
- With Our Business Partners: This may include companies that deliver online advertisements
- With Any Successors to All or Part of our Business: For example, if we merge with, acquire or are acquired, or sell part of its business to another entity. This may include an asset sale, corporate reorganization or other change of control
- For Other Reasons We May Describe to You.

In addition, we may disclose your Personal Information to third parties without your consent if we have reason to believe that disclosing this information is necessary to identify, contact or bring legal action against someone who may be causing injury to or interference with (either intentionally or unintentionally) our rights or property, other End Users, or anyone else (including the rights or property of anyone else) that could be harmed by such activities. Further, we may disclose Personal Information when we believe in good faith that such disclosure is required by and in accordance with the law. We also reserve the right to access, read, preserve, and disclose any information as we reasonably believe is necessary to:

- Satisfy any applicable law, regulation, legal process or governmental request
- Enforce our contracts or user agreements, including investigation of potential violations hereof
- Detect, prevent, or otherwise address fraud, security or technical issues.

The above may include exchanging Personal Information with other companies and organizations for fraud protection and spam/malware prevention. Notwithstanding the general terms of this policy, the collection, use, and disclosure of Personal Information may be made outside of the terms herein to the extent provided for in any applicable privacy or other legislation in effect from time to time, or pursuant to court orders.

How we secure personal information

We are committed to protecting the security of the Personal Information we collect, process, and store.

We have implemented measures designed to secure your Personal Information from accidental loss and from unauthorized access, use, alteration and disclosure. To do this, we use a variety of physical, administrative and technical safeguards designed to help protect it from unauthorized access, use and disclosure. We have implemented best-practice standards and controls in compliance with internationally recognized security frameworks. We use encryption technologies to protect data exchanged with our Website.

The safety and security of your Personal Information also depends on you. Where we have given you (or where you have chosen) a password for access to certain parts of our Website, you are responsible for ensuring the password is hard to guess and is kept confidential.

Unfortunately, the transmission of information via the internet is not completely secure. Although we have implemented commercially reasonable safeguards to protect your Personal Information, we cannot guarantee the security of Personal Information transmitted to our Website.

Your rights

We provide the same suite of services to all our Customers and End Users worldwide. We offer the following rights to all individuals regardless of their location or applicable privacy regulations. For Personal Information we have collected from and about you, you have the right to:

- Obtain information about what Personal Information we have about you and receive a copy of the information
- Update or correct your Personal Information or ask us to do it on your behalf
- Request that we delete your Personal Information at any time. We will communicate back to you within a reasonable timeline the result of your request. We may not be able to delete or erase your Personal Information, but we will inform you of these reasons and any further actions available to you
- Object to our processing of your Personal Information for direct marketing purposes. This means that we will stop using your personal information for these purposes
- Ask us to limit the way in which we use your Personal Information
- Request that we export to you in a machine-readable format all the Personal Information we have about you. If this is not technically feasible, we will inform you of these reasons and any further actions available to you.

Euna Solutions, Inc. (USA)
363 W. Erie St., Floor 7
Chicago, IL 60654

If you would rather not receive marketing communications from us, you can click the “Unsubscribe” link in e-mails we send you to stop receiving marketing communications.

You may also choose which information we collect automatically from your device by controlling the cookie settings on your browser or by indicating your cookie preferences through our Website. If you opt-out of receiving marketing communications, we may still communicate with you regarding security and privacy issues, servicing your account, fulfilling your requests, or administering any promotion or any program in which you may have elected to participate.

Our application and services are intended for business use, and we do not expect them to be of any interest to minors. We do not intentionally collect any Personal Information of consumers under the age of 13. If you believe that a child under 13 may have provided us with their Personal Information, please contact us at privacy@eunasolutions.com.

If you would like to exercise any of the rights described above, please contact us at privacy@eunasolutions.com.

You also have the right to lodge a complaint with the local organizations in charge of enforcing the privacy legislation applicable in your territory.

How long we keep your personal information

We retain Personal Information as long as it is necessary to provide the services to you and our customers, subject to any legal obligations to further retain such information.

We may also retain Personal Information to comply with the law, prevent fraud, collect fees, resolve disputes, troubleshoot problems, assist with investigations, enforce our Terms of Service and take other actions permitted by law.

The information we retain will be handled following this Privacy Policy.

Information connected to you that is no longer necessary and relevant to provide our services may be de-identified or aggregated with other non-personal data. This information may provide insights that are commercially valuable to Euna Solutions, such as statistics of the use of our services.

Storage and transfer of information

We process data, including Personal Information, in locations in the United States.

We provide the capability for the return, transfer and/or disposal of Personal Information securely.

By submitting Personal Information or otherwise using the Website or our Platform Services, you agree to this transfer, storing or processing of your Personal Information in the United States. You acknowledge and agree that your Personal Information may be accessible to law enforcement and governmental agencies relative to the country or territory where the data is stored under lawful access regimes or a court order.

Contact information

You may contact us at privacy@eunasolutions.com to exercise any of your rights or ask for more information about your Personal Information and our privacy practices.

Euna Solutions, Inc. (USA)
363 W. Erie St., Floor 7
Chicago, IL 60654

Euna Solutions General Service Level Agreement (SLA)

Overview

The purpose of this Service Level Agreement (SLA) is to outline the general terms and conditions under which Euna Solutions will deliver hosted services to each of its clients. This document aims to ensure a mutual understanding of the service expectations, responsibilities, and performance standards between the parties involved.

This general SLA covers the common provisions of multiple products and services, including but not limited to Budget, Payments, and Procurement. It defines the general service levels, performance metrics, support processes, and maintenance schedules applicable to these hosted solutions. The scope of this agreement is to ensure that Euna Solutions delivers consistent, reliable, and high-quality services, thereby supporting their client business operations effectively.

Service Performance

Availability

Solutions are continuously monitored by automated systems that track availability 24/7. The service is considered "available" when end-users can successfully access and use the core functionality of the hosted application as intended.

Uptime Guarantee

Euna Solutions is committed to delivering reliable solutions, ensuring that all hosted applications remain available a minimum of 99.9% uptime within any given calendar month.
Uptime percentage is determined based on the total number of minutes during which the service is operational in each month, e.g. 100% - (Unplanned downtime minutes/Minutes in the month).

Uptime Exclusions

- Any scheduled maintenance period where solution is unavailable due to an update or maintenance activity.
- A force majeure event where Euna Solutions has no direct control over resolving an issue
- Emergency maintenance where if issue were unaddressed, would result in material breach of SLA, data loss, or system security, etc. or could significantly impact service availability or security

Support and Maintenance

Standard Support Hours are minimally 8am to 6pm Eastern Standard Time, Monday – Friday. Excluding statutory holidays

Response times vary by product and Priority definition. Priority definitions can be found below, and response times can be found within your product specific SLA

Euna Solutions, Inc. (USA)
363 W. Erie St., Floor 7
Chicago, IL 60654

Maintenance Windows may also vary by product but Euna Solutions will guarantee that outside of any emergency, they will occur outside of client normal business hours and if not regularly scheduled, will have a 1~3 day advance notification.

Responsibilities

Euna Solutions shall

- use commercially reasonable efforts to provide its customers with maintenance and support services ("Support Services") via telephone, electronic mail, or other electronic means.
- host in a secure SOC2 environment such as AWS or Azure
- be responsible for maintaining application and information system software versions, updates, patches, and security.

Client shall

- be responsible for the confidentiality and use of its Passwords.
- not give rise to any breach of confidentiality or privacy laws, or any civil liability.
- not tamper with the security or render any part of the Systems unusable.
- not violate any local, state / provincial, federal or foreign law, treaty, regulation or convention applicable.

Support Types and Levels

Support requests will be organized into four categories: requests, incidents, problems, and changes. These categories help ensure prioritization of requests and timely handling of each type.

Requests are specific requests for information, access to a service, or some change to an existing solution, e.g. how some feature is expected to work, Account Create/Modify, etc.

Problems are when the solution is not fit for use in some way or the solution is not working as intended or expected and are often quite localized, e.g. data is displaying incorrectly, any error message, etc.

Incidents are unplanned events that disrupt or reduce the quality or security of your service and often broadly affect numerous clients, e.g. a hardware or network malfunction, etc.

Changes include anything involving organizational changes to infrastructure, such as rolling out new services or upgrading software or making a change to a production hosting environment.

Service Level Goals

Specific SLA times will vary by Product

Euna Service Desk will make every effort to fulfill requests and support incidents with the following target SLAs. A solution may initially be some temporary mitigation of the issue until a more complete solution may be implemented:

Euna Solutions, Inc. (USA)
363 W. Erie St., Floor 7
Chicago, IL 60654

Prioritization Matrix

Urgency is how bad the problem is, e.g. how many sites or people are affected, how dangerous to data or security the issue is, etc.

- **Critical**: e.g. Data Corruption, Security breach/vulnerability, numerous environments affected, Functionality inaccessible, etc.
- **High**: Very bad performance, more than one site affected, etc.
- **Medium**: Performance, workaround exists, non-critical business process
- **Low**: No significant problem, cosmetic, etc.

Impact is how quickly the problem needs be addressed, e.g. End of fiscal period, etc.

- **Critical**: Business use is impossible or significant potential to affect business
- **High**: Significant affect to business or significant potential to affect business
- **Medium**: Issues is annoying and/or troublesome, but business use may continue
- **Low**: Issue has little to no material effect to business processes

Priority is the resulting combination of Severity and Urgency and is minimally reflected by P1 to P4

- **P1**: Addressed as highest priority 24x7 until mitigated
- **P2**: Addressed as highest priority
- **P3**: Addressed as next available task to be taken on (Sprint interruption, but not task interruption)
- **P4**: Addressed after planned against all other Engineering, Security or Product initiatives

Examples:

- Onsite Demo (Critical urgency), single user login (Moderate Impact) is not working, is a P2
- A high vulnerability in the most recent release, is a P1
- A site cosmetic error like a misspelling, is a P4

IMPACT	**URGENCY**			
	Critical	**High** Affects 10-30% of tenants, leading to significant service degradation or partial outage	**Medium** Affects less than 10% of tenants, with minor service performance degradation	**Low** Affects individual tenants or a very small group, with negligible impact on overall service performance
Extensive Critical business operations are halted, resulting in substantial financial loss or reputational damage	P1	P1	P2	P3
Significant Important business functions are impaired, necessitating urgent attention and resolution	P1	P2	P3	P4

Euna Solutions, Inc. (USA)
363 W. Erie St., Floor 7
Chicago, IL 60654

Moderate Non-critical business operations are affected, requiring timely intervention	P2	P3	P4	P4
Minor Very low impact on business operations, typically involving minor inconveniences	P3	P4	P4	P4

TAKINGS IMPACT ASSESSMENT CHECKLIST

Complete this form for any county action that involves the adoption of a regulation, policy, guideline, court resolution, or order.

Project/Regulation Name: Rescind Court Order #146190 - RFP No. F2025098 - Annual Contract for Grants Management Software and Maintenance - Countywide - StreamLink Software, Inc. d/b/a AmpliFund - Per Contract Terms

County Department: PURCHASING

Contact Person: Melissa Lee, C.P.M., A.P.P.

Phone Number for Contact Person: (817) 884-3245

Type of TIA Performed: (SHORT TIA) or FULL TIA. Circle one after answering the questions in Sections II and III below.

****

I. Stated Purpose

Attach to this checklist an explanation of the purpose of the regulation, policy, guideline, court resolution or order.

****

Note: The remainder of this Takings Impact Assessment Checklist should be completed in consultation with the Criminal District Attorney's Office.

II. Potential Effect on Private Real Property

1. Does the county action require a physical invasion, occupation or dedication of real property?

   Yes_____ No __√__

2. Does the county action limit or restrict a real property right, even partially or temporarily?

   Yes_____ No __√__

If you answered yes to either question, go to Section III. If you answered no to both, STOP HERE and circle SHORT TIA at the top of the form.

****

TARRANT COUNTY
COMMISSIONERS COURT COMMUNICATION

Court Date: December 9, 2025	**Court Order #:**	**Page:** 1 of 3
Department: Purchasing	**Prepared By:** Emily Salter, CPPB	**Approved By:** Christopher Lax, CPSM, CPSD, CPCP

SUBJECT:

RFP No. F2025156 - Annual Contract for AI Development Services - Information Technology

COMMISSIONERS COURT ACTION REQUESTED

It is requested that the Commissioners Court reject all proposals for RFP No. F2025156, Annual Contract for AI Development Services, and grant permission to rebid with revised specifications.

BACKGROUND

Notice of the County's intent to bid was advertised in local newspapers, as required by State statute, posted on the Internet, the Arlington Black Chamber of Commerce, the Fort Worth Hispanic Chamber of Commerce, the Fort Worth Metropolitan Black Chamber of Commerce, and the Tarrant County Asian American Chamber of Commerce. One thousand three hundred and sixty-four (1,364) vendors were contacted and requested to participate in this proposal process. All documents pertaining to this proposal were posted on the Tarrant County website and were downloaded by interested parties. A pre-proposal conference held on June 2, 2025, was attended by fifty-one (51) vendors as well as representatives from Information Technology and Purchasing. Fifty-seven (57) proposals and nine (9) no-bids were received.

After review by Purchasing representatives, it was determined that there were flaws in the quality of the specifications and that assumptions would have to be made to present an award recommendation.

The purpose of this proposal is to find professional service partner to provide data analytics and Artificial Intelligence (AI) solutions leveraging tools and capabilities within Tarrant County's Microsoft Azure and Amazon (AWS) environments.

Therefore, it is the recommendation of Purchasing that the Commissioners Court reject all proposals received for RFP No. F2025156, Annual Contract for AI Development Services, and grant permission to rebid with revised specifications.

FISCAL IMPACT

There is no fiscal impact associated with this item.

Attachments

F2025156 Backup.pdf

TAKINGS IMPACT ASSESSMENT CHECKLIST

Complete this form for any county action that involves the adoption of a regulation, policy, guideline, court resolution, or order.

Project/Regulation Name: RFP No. F2025156, Annual Contract for AI Development Services - Information Technology

County Department: PURCHASING
Contact Person: Melissa Lee, C.P.M., A.P.P.
Phone Number for Contact Person: (817) 884-3245

Type of TIA Performed: (SHORT TIA) or FULL TIA. Circle one after answering the questions in Sections II and III below.

****

I.Stated Purpose

Attach to this checklist an explanation of the purpose of the regulation, policy, guideline, court resolution or order.

****

Note: The remainder of this Takings Impact Assessment Checklist should be completed in consultation with the Criminal District Attorney's Office.

II. Potential Effect on Private Real Property

1. Does the county action require a physical invasion, occupation or dedication of real property?

   Yes_____ No __√__

2. Does the county action limit or restrict a real property right, even partially or temporarily?

   Yes_____ No __√__

   If you answered yes to either question, go to Section III. If you answered no to both, STOP HERE and circle SHORT TIA at the top of the form.

****

TARRANT COUNTY
COMMISSIONERS COURT COMMUNICATION

Court Date: December 9, 2025	**Court Order #:**	**Page:** 1 of 4
Department: Purchasing	**Prepared By:** Melissa Lee, C.P.M., A.P.P.	**Approved By:** Christopher Lax, CPSM, CPSD, CPCP

SUBJECT:

Permission to Take Bids/RFPs

COMMISSIONERS COURT ACTION REQUESTED

It is requested that the Commissioners Court grant permission to take Bids/RFP's for the following:

a. Purchase of ePollBooks Printers
Estimated value - $127,500.00
Funding is available in the FY 2026 budget.

The purpose of this is for the purchase of three hundred (300) mCPrint-3 star micronics ePollBooks printers to expand the current inventory and replace existing equipment. These printers work with the ePollBooks to print out the voter vodes upon voter check-in. This will be purchased by Elections Administration, and the primary contacts are Troy Harvard and Clint Ludwig.

b. Annual Contract for Medical Examiner Supplies
Estimated value - $40,000.00
Funding is available in the FY 2026 budget.

The purpose of this contract is for the ongoing purchase of laboratory consumables and examination supplies that are used daily within the Medical Examiner's Office. This contract will be used by Medical Examiner's Office and the primary contact is Kelly Clark.

c. Purchase and Installation of Kitchen Pulper for the Lon Evans Corrections Center
Estimated value - $100,000.00
Funding is available in the FY 2026 budget.

The purpose of this purchase is to replace one (1) of the existing kitchen pulpers in the Lon Evans Correction Center. This unit breaks down kitchen waste, like food, by grinding it into small particles. The result is a drastic reduction in waste volume, so staff will spend less time transporting trash bags to the dumpster. The Pulper is original to the building and has been in operation for 13 years. Repair costs to the pulper have exceeded the cost of a new pulper. These will be purchased by Facilities Management and the primary contact is Chad Raines.

d. Purchase of Self-Propelled Bituminous Paver
Estimated value - $621,500.00
Funding is available in the FY 2026 budget.

The purpose of this purchase for one (1) paver is to lay asphalt mix (hot mix asphalt, warm mix, or cold mix) evenly on roads and other paved surfaces. This machine follows the distributor to lay and pave asphalt mix to the road. This will be purchased by Precinct 4 and the primary contact is Ned Pyle.

e. Purchase of 4,000 Gallon Water Tank
Estimated value - $236,250.00
Funding is available in the FY 2026 budget.

The purpose of this purchase of one (1) 4,000 gallon water tank is to prepare the ground for road work to minimize dust and assist pavers in creating even starting point for road base materials. This will be purchased by Precinct 1 and the primary contact is Misael Linan.

f. Purchase of Tandem Dump Trucks
Estimated value - $342,910.00
Funding is available in the FY 2026 budget.

The purpose of this purchase of two (2) tandem dump trucks is to transport material from work sites during road projects. This will be purchased by Precinct 1 and the primary contact is Misael Linan.

g. Purchase of Truck Mounted Telescopic Aerial Device
Estimated value - $220,000.00
Funding is available in the FY 2026 budget.

The purpose of this purchase of one (1) truck mounted telescopic aerial device equipment is to lift workers safely into the air to perform overhead work. It is strictly for lifting people, not digging. This will be purchased by Precinct 2 and the primary contact is Jason Murphy.

h. Annual Contract for Electronic Fire Alarm Inspections, Repairs and Parts Replacement
Estimated value - $205,988.00
Funding is available in the FY 2026 budget.

The purpose of this bid is to inspect, repair, install and replace fire alarms, fire alarm systems, and other related fire alarm parts throughout Tarrant County buildings under the National Fire Protection Association Standard Codes 25 and 72. This project is for Facilities Management, and the primary contact is Frank Lopez.

i. Subcourthouse at Mansfield Chiller Replacement
Estimated value - $809,400.00
Funding is available in the FY 2026 budget.

The purpose of this contract is to remove the existing air-cooled chillers and replace them with two (2) new 52.24-100 ton air-cooled chillers. The current chillers are twenty-four (24) years old and do not have redundancy. The new chillers will have redundancy, ensuring that if one chiller fails, the other will be capable of maintaining the building's cooling requirements. This project is for Facilities Management-Operations, and the primary contact is Jason Hewitt.

j. Subcourthouse at Mansfield Emergency Generator System
Estimated value - $1,200,000.00
Funding is available in the FY 2026 budget.

This contract will provide for the installation of an emergency generator system at the Subcourthouse at Mansfield to ensure continuity of County operations during power outages. The facility currently does not have a generator. The project scope includes the installation of a 450kW generator, docking station, and automatic transfer switch. This project is for Facilities Management, and the primary contacts are Chad Raines and Jason Hewitt.

k. Annual Contract for Onbase Maintenance and Support
Estimated Value - $160,000.00
Funding is available in the FY 2026 budget.

The purpose of this contract is for managing documents and records, providing workflows that automate or eliminate manual processes, and integrating with SAP, Microsoft Office, and Appian. Its scanning abilities decrease paper records storage and speed up the processing of invoices in SAP. Its record management capabilities include safely and securely maintaining electronic records and an application that allows users to request and return their paper records from the Records Center. This contract will be used by Information Technology and the primary contact is Mike Webb.

l. **Purchase of Ballot Pouches**
Estimated Value - $57,400.00
Funding is available in the FY 2026 budget.

The purpose of this contract is to purchase one thousand four-hundred (1,400) Provisional Ballot pouches, and one thousand four-hundred (1,400) Spoiled Ballot pouches that satisfy the lock requirements of the Texas Election Code. These will be purchased by Elections Administration, and the primary contacts are Clint Ludwig and Troy Havard.

BACKGROUND

The above list is for goods/services to be purchased through the competitive bidding process required by Texas Local Government Code 262.002(c).

FISCAL IMPACT

There is no fiscal impact associated with this item.

Attachments

Permissions TIA.pdf

TAKINGS IMPACT ASSESSMENT CHECKLIST

Complete this form for any county action that involves the adoption of a regulation, policy, guideline, court resolution, or order.

Project/Regulation Name: Permission to Take Bids-RFPs

County Department: PURCHASING

Contact Person: Melissa Lee, C.P.M., A.P.P.

Phone Number for Contact Person: (817) 884-3245

Type of TIA Performed: (SHORT TIA) or FULL TIA. Circle one after answering the questions in Sections II and III below.

****

I. Stated Purpose

Attach to this checklist an explanation of the purpose of the regulation, policy, guideline, court resolution or order.

****

Note: The remainder of this Takings Impact Assessment Checklist should be completed in consultation with the Criminal District Attorney's Office.

II. Potential Effect on Private Real Property

1. Does the county action require a physical invasion, occupation or dedication of real property?

   Yes_____ No √

2. Does the county action limit or restrict a real property right, even partially or temporarily?

   Yes_____ No √

If you answered yes to either question, go to Section III. If you answered no to both, STOP HERE and circle SHORT TIA at the top of the form.

****